REPAIR PARTS

DHG Commercial 6 Ton Hi Static Package Gas Unit

DHG0723WH00001FAA
DHG0723WL00001FAA
DHG0723WM00001FAA
DHG0724WH00001FAA
DHG0724WL00001FAA
DHG0724WM00001FAA
DHG0727WH00001FAA
DHG0727WL00001FAA
DHG0727WM00001FAA

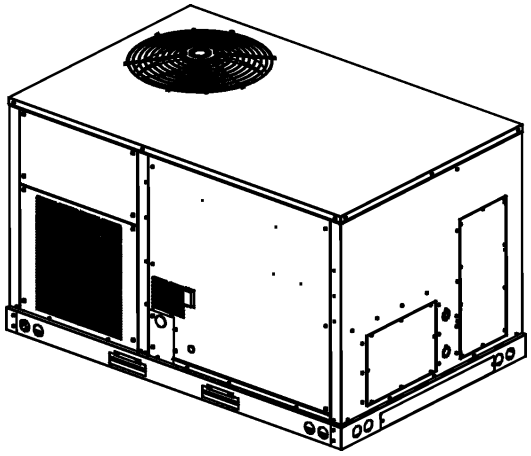

COMMERCIAL GRADE

This manual is to be used by qualified technicians only.

© 2024 DAIKIN COMFORT TECHNOLOGIES MANUFACTURING, L.P. ◊ 19001 Kermier Rd. ◊ Waller, TX 77484

Important Information

Index

Functional Parts List 3

Illustration and Parts ..... 4 - 17

Views shown are for parts illustrations only, not servicing procedures.

Text Codes:

AR - As Required
NA - Not Available
NS - Not Shown
00000000 - See Note
QTY - Quantity Example (QTY 3) (If Quantity not shown, Quantity = 1)
M - Model Example (M1) (If M Code not shown, then part is used on all Models)

Expanded Model Nomenclature:

Example
M1 - Model#1
M2 - Model#2
M3 - Model#3

Daikin Comfort Technologies Manufacturing , L.P. is not responsible for personal injury or property damage resulting from improper service. Review all service information before beginning repairs.

Warranty service must be performed by an authorized technician, using authorized factory parts. If service is required after the warranty expires, Daikin Comfort Technologies Manufacturing , L.P. also recommends contacting an authorized technician and using authorized factory parts.

Daikin Comfort Technologies Manufacturing , L.P. reserves the right to discontinue, or change at any time, specifications or designs without notice or without incurring obligations.

For assistance within the U.S.A. contact:
Equipment Support
Daikin Comfort Technologies Manufacturing , L.P.
19001 Kermier Road
Waller, Texas 77484
855-770-5678-Telephone
713-863-2382-Facsimile

For assistance outside the U.S.A. contact:
International Division
Daikin Comfort Technologies Manufacturing , L.P.
19001 Kermier Road
Waller, Texas 77484
713-861-2500-Telephone
713-863-2382-Facsimile

Functional Parts

Part No:	Description:
0163F00017	BECKETT BURNER (QTY 6)
CAP100000440LA	CAP 10 MFD/440V/OVAL (M4, M5, M6)
CAP100000370LA	CAP, 10 MFD/370V/OVAL (M1, M2, M3)
CAP050000440LA	CAPACITOR (M7, M8, M9)
YPS60K1TTFDASC	COMPRESSOR (M4, M5, M6)
YPS60K1TTFEASC	COMPRESSOR (M7, M8, M9)
YPS60K1TTF5ASC	COMPRESSOR (M1, M2, M3)
CONT2P040024D	CONT, 2 POLE, 40 AMP, 24VAC
CONT3P030024D	CONT, 3 POLE, 30 AMP, 24VAC
CONT3P030024D	CONT, 3 POLE, 30 AMP, 24VAC
0130M00178	DPDT RELAY 24VAC (QTY 4)
0251L00247	EXPANSION VALVE ASSEMBLY
B1086765	FAN BLADE, TYPE 3
0130M00962	FLAME SENSOR
0130M00583	FREEZE STAT
0130L00209	HEATER, CRANKCASE 240V, 40W (M1, M2, M3)
0130L00211	HEATER, CRANKCASE 480V, 40W (M4, M5, M6)
0130L00213	HEATER, CRANKCASE 575V, 40W (M7, M8, M9)
20261709	IGNITOR
0130F00035	LIMIT, PRIMARY
20162904	LIMIT, PRIMARY
10123532	LIMIT-RESET MAN-GRAY (M2, M5, M8)
10123529	LIMIT-RESET MAN-GREEN (M1, M3, M4, M6, M7, M9)
0131L00702	MOTOR- PROGRAMMED (M3, M6, M9)
0131L00701	MOTOR- PROGRAMMED (M2, M5, M8)
0131L00703	MOTOR- PROGRAMMED (M1, M4, M7)
0131M00430	MOTOR, 1/3 HP, 1 SP, 6 PL (M1, M2, M3)
0131M00858	MOTOR, 1/3 HP, OD (M7, M8, M9)
0131M00774	MOTOR, 1/3 HP, OD (M4, M5, M6)
PCBCM301V0001	PCB CONTROL CIR HANDLER
PCBAG123	PCB, IGNITION,DSI, INTEG
10135604	RELAY
SER2A08012	SENSATA R32 SENSOR
0130M00199	SWITCH CRANK CASE HEATER
0130M00730	SWITCH, HIGH PRESSURE
0130M00732	SWITCH, LOW PRESSURE
11112501	SWITCH-PRESSURE
0130M00038	TERMINAL BOARD
0130M00861	TRANSFORMER (M7, M8, M9)
0130M00860	TRANSFORMER (M7, M8, M9)
0130M00862	TRANSFORMER (M4, M5, M6)
0130M00859	TRANSFORMER (M1, M2, M3, M4, M5, M6)

Expanded Model Nomenclature

M1 - DHG0723WH00001FAA
M2 - DHG0723WL00001FAA
M3 - DHG0723WM00001FAA
M4 - DHG0724WH00001FAA
M5 - DHG0724WL00001FAA
M6 - DHG0724WM00001FAA
M7 - DHG0727WH00001FAA
M8 - DHG0727WL00001FAA
M9 - DHG0727WM00001FAA

SPECIAL PARTS

RP-FIOPS*	ACCESSORY RP MANUAL
RP-HXS*	HEAT EXCHANGE MANUAL
RP-EHS(D/B)S*	HEATER KIT RP MANUAL
RP-EHX(D/B)S*	HEATER KIT RP MANUAL

CABINET ASSEMBLY

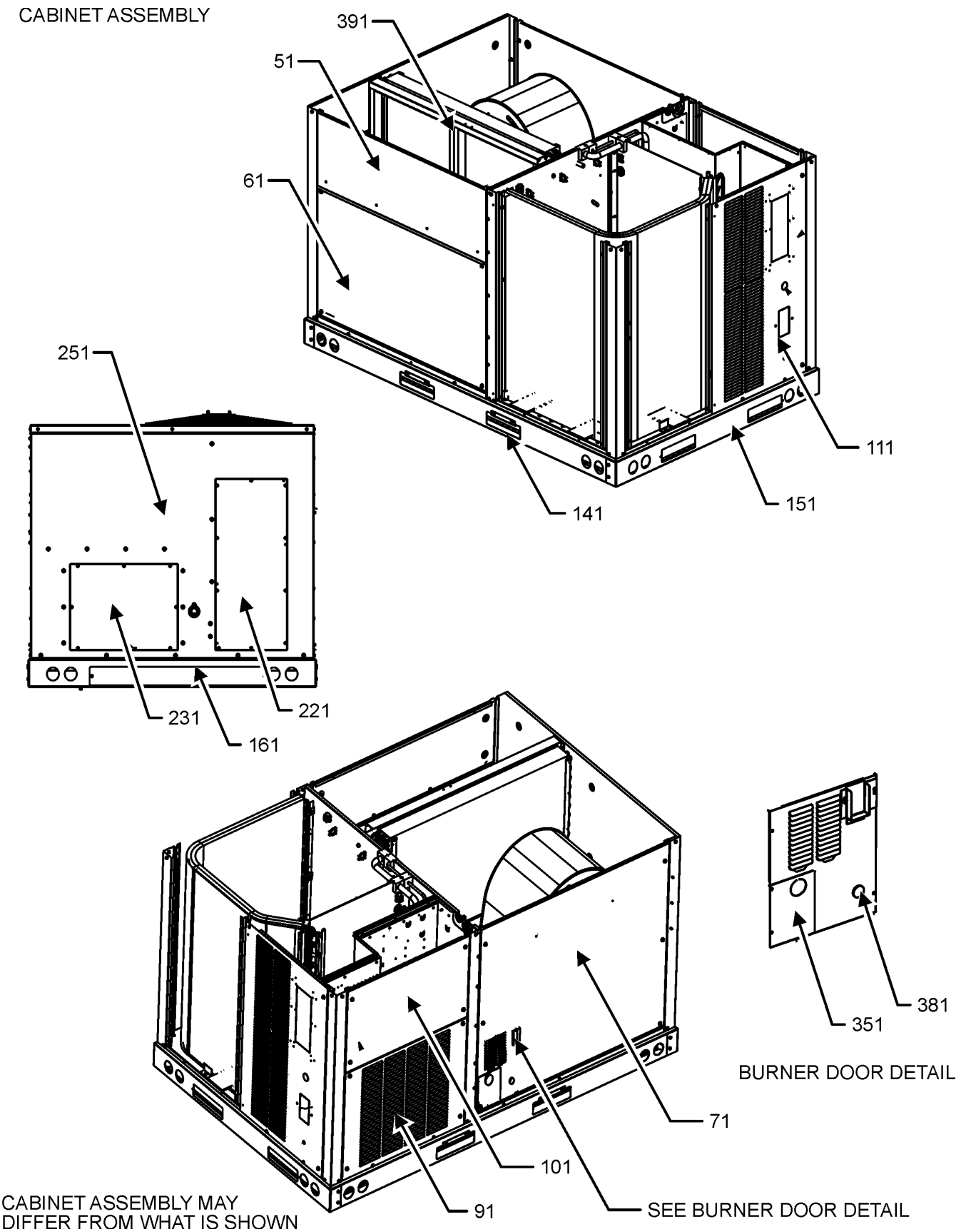

CABINET ASSEMBLY

Ref. No:	Part No:	Description:	Ref. No:	Part No:	Description:

Image 1:

51	0121L01807SB	PAINTED FILTER PANEL
61	0121L01651SB	PAINTED ECONOMIZER PANEL
71	0121L03628SB	PAINTED, PANEL GAS BLOWER
91	0121L02359SB	PAINTED COMPRESSOR PANEL
101	0121L02262SB	PAINTED CONTROL BOX PANEL
111	0121L03644SB	PAINTED, COMPRESSOR BACK PANEL
141	0121L04850	RAIL, SIDE (QTY 2)
151	0121L01621	END RAIL
161	0121L04776	END RAIL
221	0121L02910SB	PAINTED COVER-DUCT RETURN
231	0121L02911SB	PAINTED COVER-DUCT SUPPLY
251	0121L05480SB	PAINTED DUCT PANEL
351	0121L03443SB	PAINTED, GAS INLET PANEL
381	B1392139	VIEW PORT BUSHING, CLEAR 1.00
391	0270L01445	ASSY., FILTER HOLDER
NS	0160L00136	AIR FILTER (QTY 4)
NS	B1910010	GAS LINE GROMMET
NS	0121L03931	HEAT EXCHANGER FLASHING
NS	0121L03288SB	PAINTED, COLLAR, FLUE

Expanded Model Nomenclature

M1 - DHG0723WH00001FAA
M2 - DHG0723WL00001FAA
M3 - DHG0723WM00001FAA
M4 - DHG0724WH00001FAA
M5 - DHG0724WL00001FAA
M6 - DHG0724WM00001FAA
M7 - DHG0727WH00001FAA
M8 - DHG0727WL00001FAA
M9 - DHG0727WM00001FAA

TOP PANEL AND TUBING ASSEMBLY

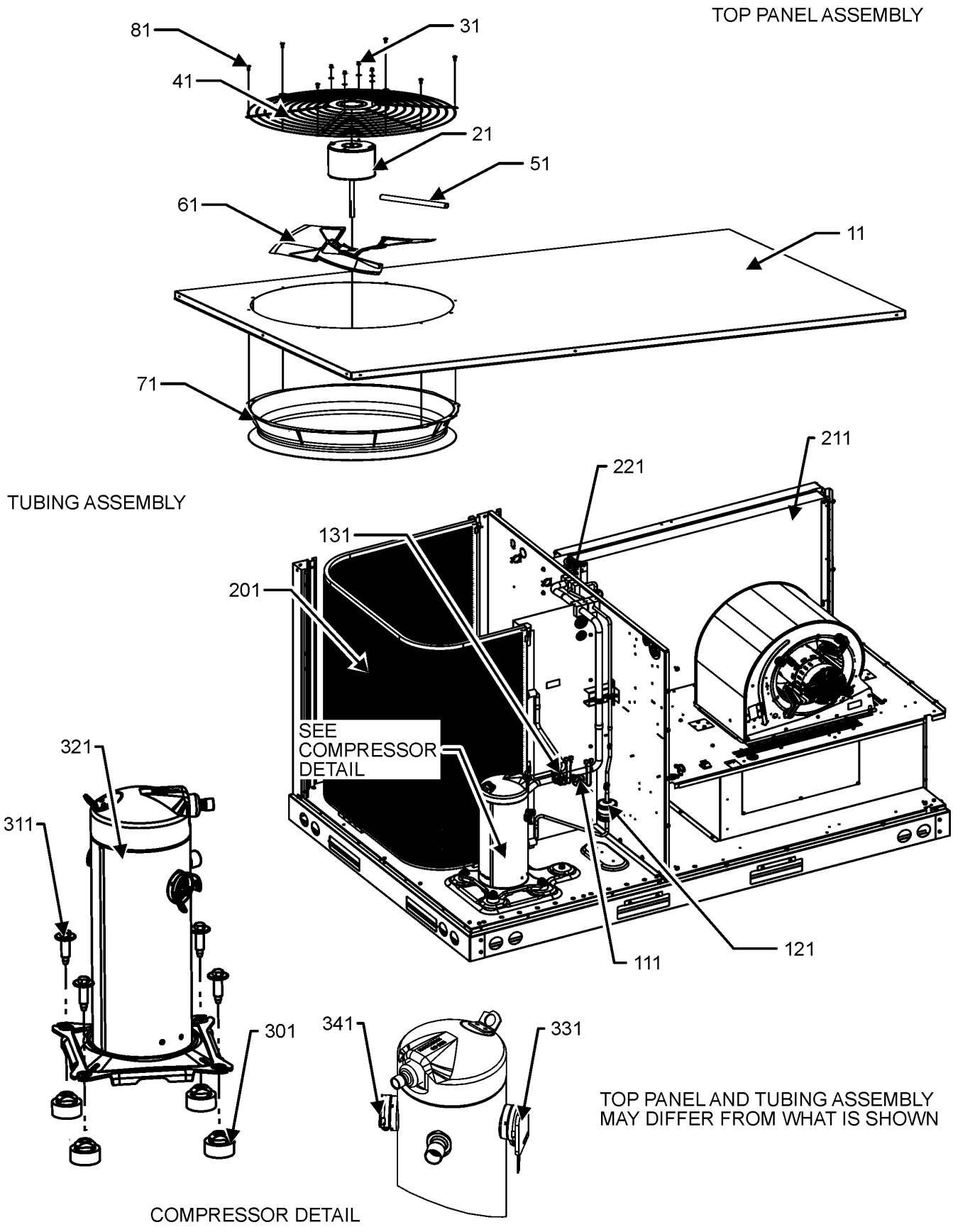

TOP PANEL AND TUBING ASSEMBLY

Ref. No:	Part No:	Description:
Image 1:		
11	0121L01626SB	PAINTED, TOP PANEL
21	0131M00430	MOTOR, 1/3 HP, 1 SP, 6 PL (M1, M2, M3)
21	0131M00774	MOTOR, 1/3 HP, OD (M4, M5, M6)
21	0131M00858	MOTOR, 1/3 HP, OD (M7, M8, M9)
31	0163M00006P	ACORN NUT 5/16 HEX BLACK (QTY 4)
41	0152G00000	FAN GRILLE, RAISED
51	0161R00124	CONDUIT
61	B1086765	FAN BLADE, TYPE 3
71	0161R00048	MOLDED RING-VENTURI 22
81	0163M00004	SCREW #10X3/4", BLACK (QTY 8)
111	0130M00732	SWITCH, LOW PRESSURE
121	0162R00056	FILTER/DRIER-BI-FLOW
131	0130M00730	SWITCH, HIGH PRESSURE
201	0201L01029	OD COIL TUBING ASSEMBLY
211	0202L00729	ID COIL TUBING ASSEMBLY
221	0130M00583	FREEZE STAT
301	B1339533	COMPRESSOR GROMMET (QTY 4)
311	B1393740	COMP. BOLT & SLEEVE (QTY 4)
321	YPS60K1TTF5ASC	COMPRESSOR (M1, M2, M3)
321	YPS60K1TTFDASC	COMPRESSOR (M4, M5, M6)
321	YPS60K1TTFEASC	COMPRESSOR (M7, M8, M9)
331	0159L00065	HARNESS-COMP SCROLL
341	0159G00010	CABLE, COMPR SCROLL
NS	0141L00003X	BOARD-FORK (QTY 2)
NS	0251L00247	EXPANSION VALVE ASSEMBLY
NS	0130L00209	HEATER, CRANKCASE 240V, 40W (M1, M2, M3)
NS	0130L00211	HEATER, CRANKCASE 480V, 40W (M4, M5, M6)
NS	0130L00213	HEATER, CRANKCASE 575V, 40W (M7, M8, M9)
NS	0121L03516	PNL, BRACKET, FORK BOARD (QTY 4)
NS	0163M00629	RED CAP WITH O-RING (QTY 3)
NS	0130M00199	SWITCH CRANK CASE HEATER
NS	0163M00005P	WASHER, BLACK (.50 OD .218ID) (QTY 4)
NS	M0272803	WASHER-LOCK

Expanded Model Nomenclature

M1 - DHG0723WH00001FAA
M2 - DHG0723WL00001FAA
M3 - DHG0723WM00001FAA
M4 - DHG0724WH00001FAA
M5 - DHG0724WL00001FAA
M6 - DHG0724WM00001FAA
M7 - DHG0727WH00001FAA
M8 - DHG0727WL00001FAA
M9 - DHG0727WM00001FAA

PARTITION ASSEMBLY

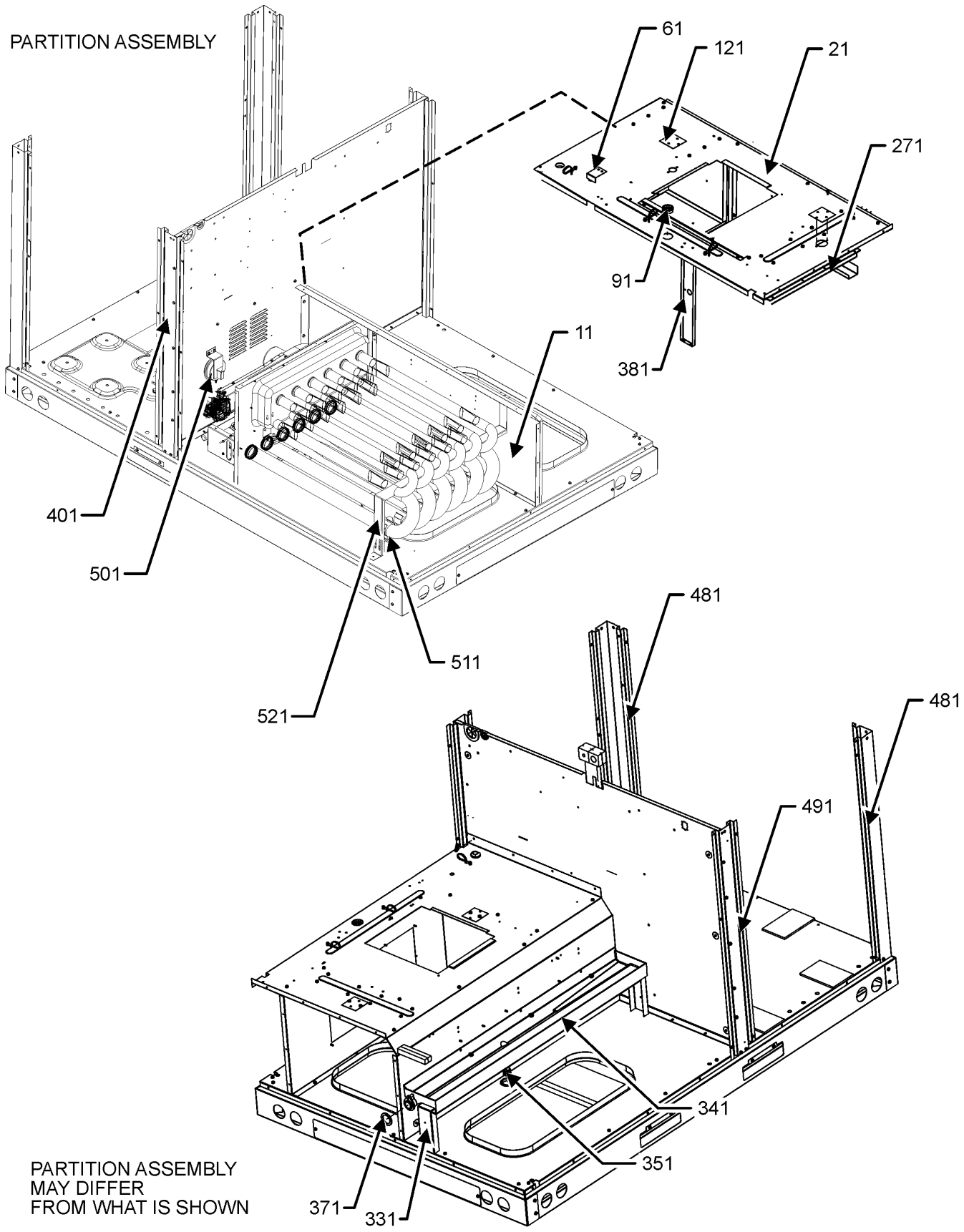

PARTITION ASSEMBLY

Ref. No:	Part No:	Description:	Ref. No:	Part No:	Description:

Image 1:

11	0121L05686	SIDE, BLOWER DECK
21	0121L05160	PANEL, BLOWER DECK
61	0121L01709	BLOWER DECK PLATE
91	B1392147	UNIVERSIAL BUSHING WITH SLICE
121	0121L00321	COVER-SMOKE DETECTOR (QTY 2)
271	0121L02633	BLOWER DECK U-BRACKET
331	0121L02985	DRAINPAN SUPPORT
341	0161L00007	DRAIN PAN, EVAPORATOR 3-5 TON
351	0163L00071	PLUG, DRAIN
371	0154L00180	GASKET, DRAIN PAN
381	0121L00300	POST-DECK SUPPORT
401	0121L05548SB	PAINTED POST, SIDE
481	0121L05547SB	PAINTED POST, CORNER (QTY 2)
491	0121L05549SB	PAINTED POST, SIDE
501	11112501	SWITCH-PRESSURE
511	0121L02935	BRACKET, SUPPORT, TUBE
521	0121L03320	BRACKET, TUBE SUPPORT
NS	0164M00111	GROMMET-D
NS	0164G00005	GROMMET-HORSESHOW 1.675

Expanded Model Nomenclature

M1 - DHG0723WH00001FAA
M2 - DHG0723WL00001FAA
M3 - DHG0723WM00001FAA
M4 - DHG0724WH00001FAA
M5 - DHG0724WL00001FAA
M6 - DHG0724WM00001FAA
M7 - DHG0727WH00001FAA
M8 - DHG0727WL00001FAA
M9 - DHG0727WM00001FAA

BLOWER ASSEMBLY

BLOWER ASSEMBLY 1

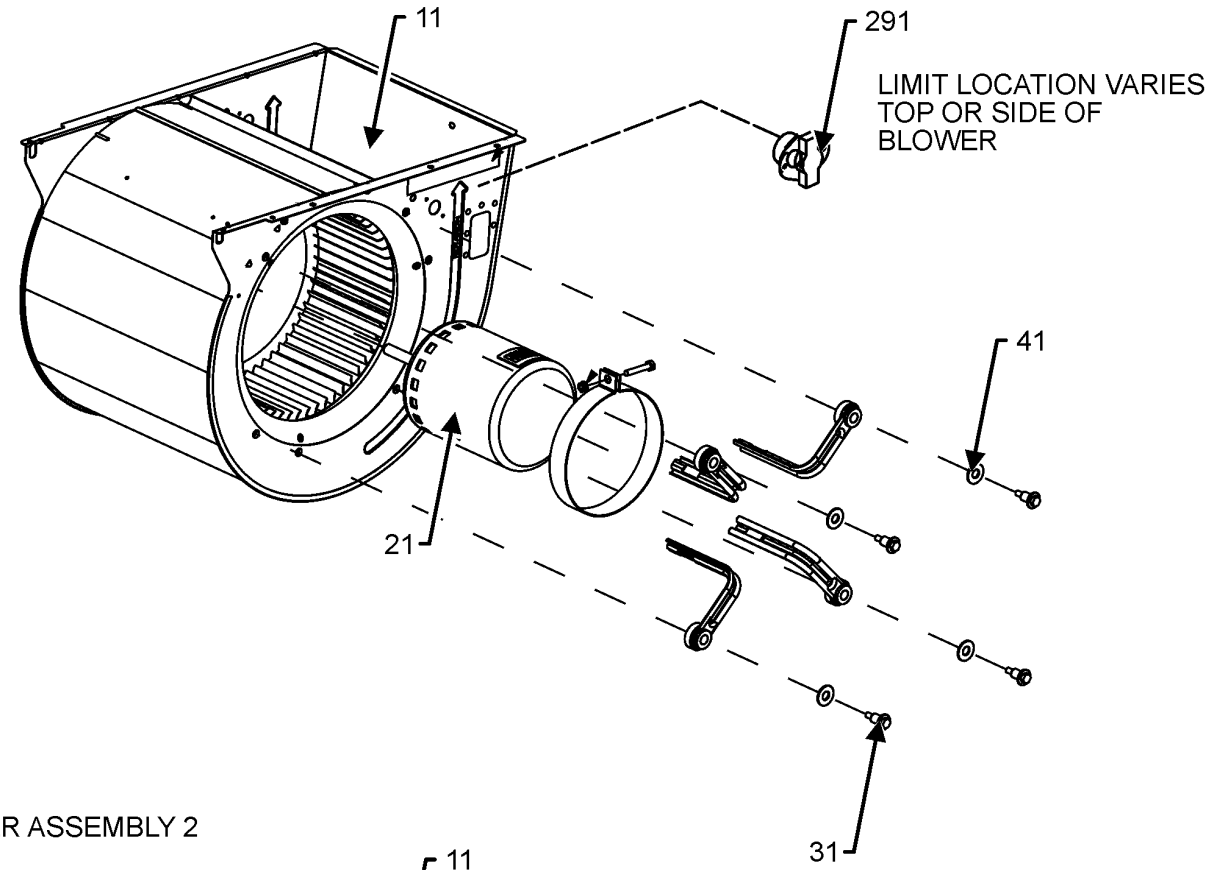

BLOWER ASSEMBLY 2

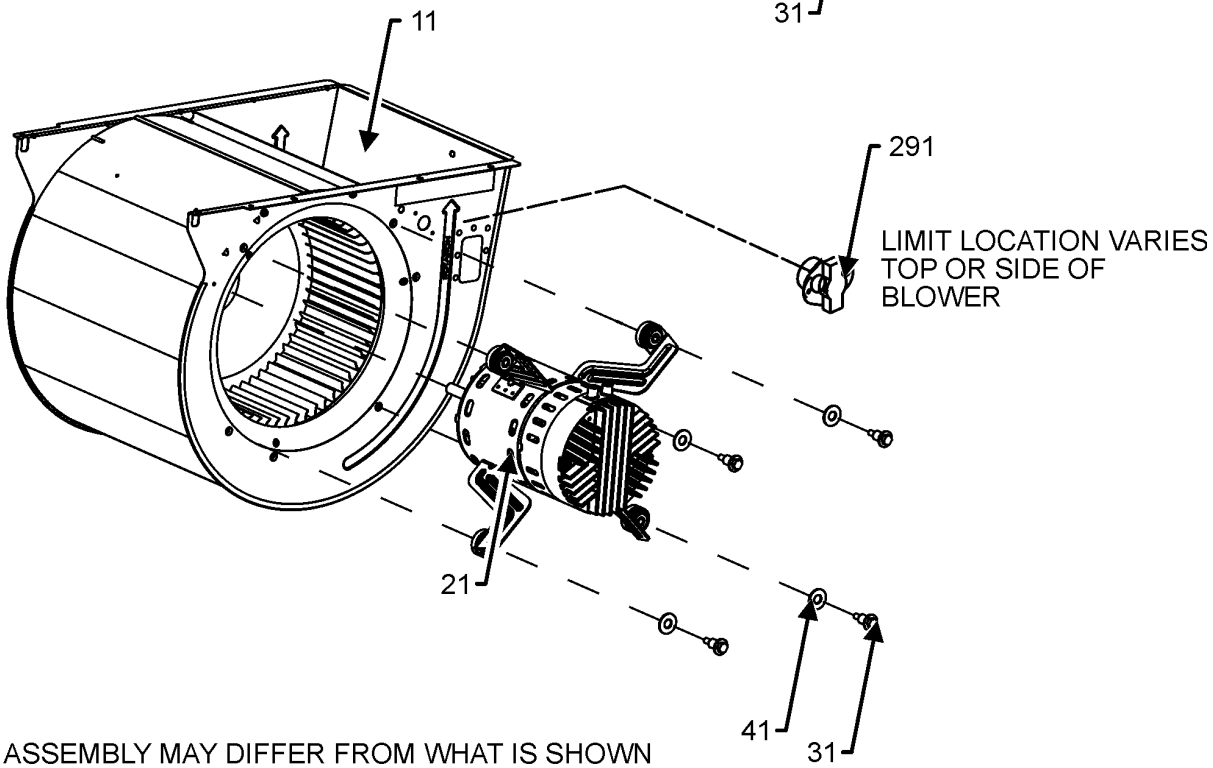

BLOWER ASSEMBLY MAY DIFFER FROM WHAT IS SHOWN

BLOWER ASSEMBLY

Ref. No:	Part No:	Description:	Ref. No:	Part No:	Description:

Image 1:

11	0271L00137	ASSY., BLOWER HOUSING
21	0131L00701	MOTOR- PROGRAMMED (M2, M5, M8)
21	0131L00702	MOTOR- PROGRAMMED (M3, M6, M9)
21	0131L00703	MOTOR- PROGRAMMED (M1, M4, M7)
31	M0250565	SCREW-TC 1.25" (QTY 4)
41	B1392918	WASHER, FLAT 1/4 ID X 1 OD (QTY 4)
291	20162904	LIMIT, PRIMARY

Expanded Model Nomenclature

M1 - DHG0723WH00001FAA
M2 - DHG0723WL00001FAA
M3 - DHG0723WM00001FAA
M4 - DHG0724WH00001FAA
M5 - DHG0724WL00001FAA
M6 - DHG0724WM00001FAA
M7 - DHG0727WH00001FAA
M8 - DHG0727WL00001FAA
M9 - DHG0727WM00001FAA

CONTROL BOX ASSEMBLY

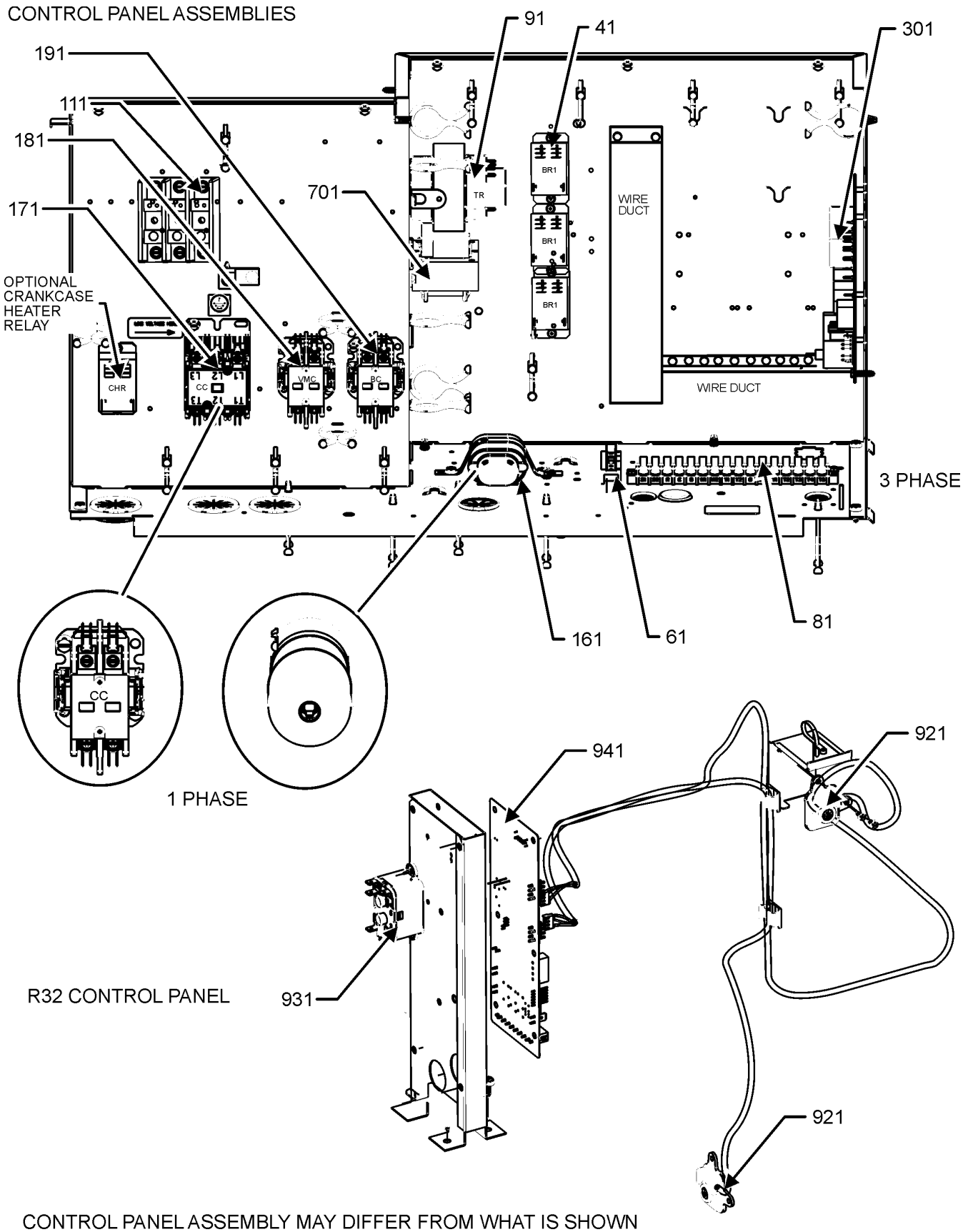

CONTROL PANEL ASSEMBLY MAY DIFFER FROM WHAT IS SHOWN

CONTROL BOX ASSEMBLY

Ref. No:	Part No:	Description:	Ref. No:	Part No:	Description:

Image 1:

41	0130M00178	DPDT RELAY 24VAC (QTY 4)
61	802007090	TERM BOARD
81	0130M00038	TERMINAL BOARD
91	0130M00859	TRANSFORMER (M1, M2, M3, M4, M5, M6)
91	0130M00861	TRANSFORMER (M7, M8, M9)
111	0130M00509	BLOCK POWER
161	CAP100000440LA	CAP 10 MFD/440V/OVAL (M4, M5, M6)
161	CAP100000370LA	CAP, 10 MFD/370V/OVAL (M1, M2, M3)
161	CAP050000440LA	CAPACITOR (M7, M8, M9)
171	CONT3P030024D	CONT, 3 POLE, 30 AMP, 24VAC
181	CONT2P040024D	CONT, 2 POLE, 40 AMP, 24VAC
191	CONT3P030024D	CONT, 3 POLE, 30 AMP, 24VAC
301	PCBAG123	PCB, IGNITION,DSI, INTEG
701	0130M00860	TRANSFORMER (M7, M8, M9)
701	0130M00862	TRANSFORMER (M4, M5, M6)
921	SER2A08012	SENSATA R32 SENSOR
931	10135604	RELAY
941	PCBCM301V0001	PCB CONTROL CIR HANDLER
NS	0164M00127	BOOT, CAPACITOR
NS	20520901	STRAP-CAPACITOR

Expanded Model Nomenclature

M1 - DHG0723WH00001FAA
M2 - DHG0723WL00001FAA
M3 - DHG0723WM00001FAA
M4 - DHG0724WH00001FAA
M5 - DHG0724WL00001FAA
M6 - DHG0724WM00001FAA
M7 - DHG0727WH00001FAA
M8 - DHG0727WL00001FAA
M9 - DHG0727WM00001FAA

HEAT EXCHANGE ASSEMBLY

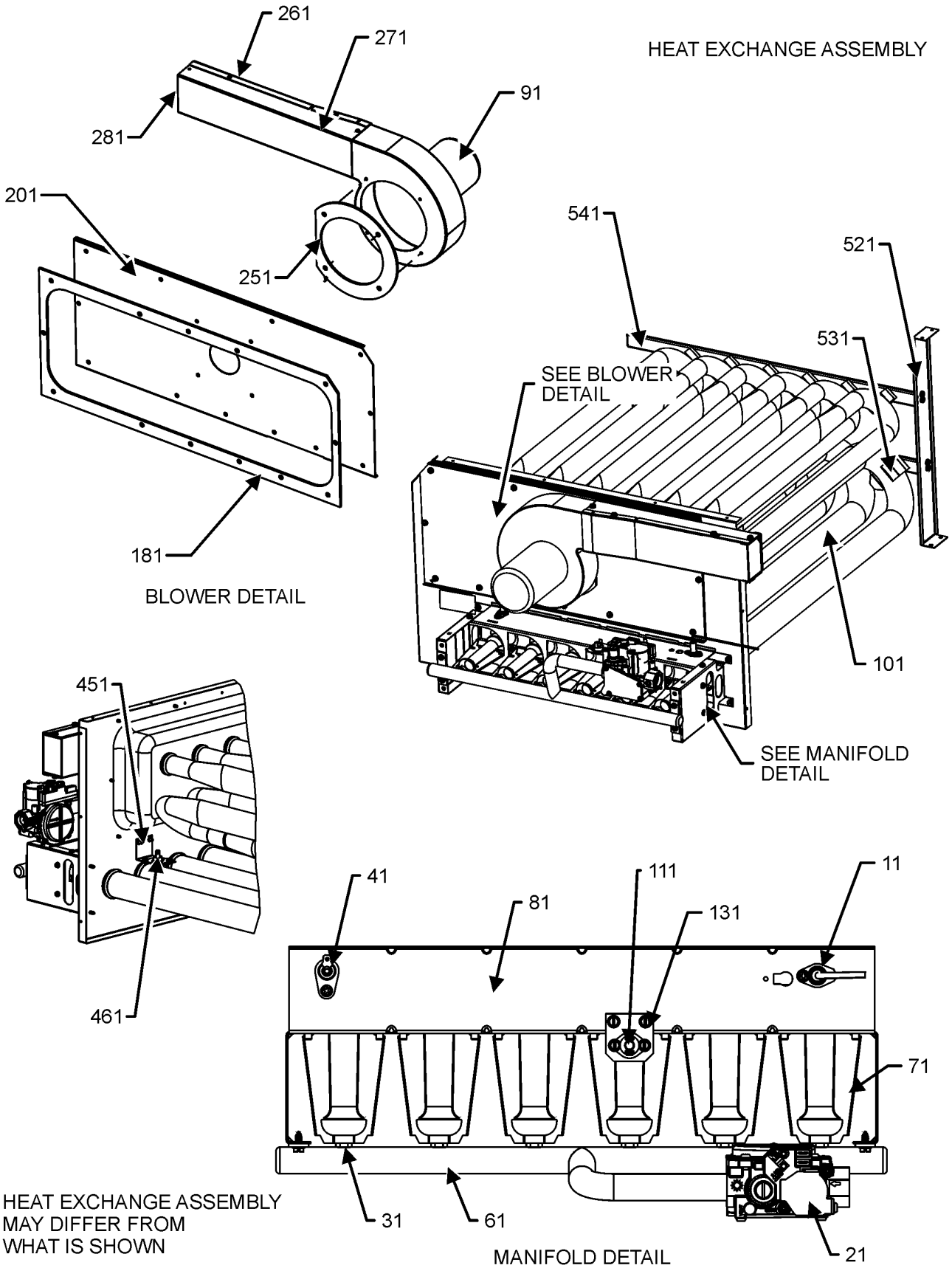

HEAT EXCHANGE ASSEMBLY

Ref. No:	Part No:	Description:
Image 1:		
11	20261709	IGNITOR
31	0163F00018	ORIFICE (M2, M5, M8)
31	0163L00195	ORIFICE (M1, M3, M4, M6, M7, M9)
41	0130M00962	FLAME SENSOR
61	0163L00143	MANIFOLD, GAS 3 BURNER (M2, M5, M8)
61	0163L00029	MANIFOLD-GAS, 5 BURNER (M3, M6, M9)
61	0163L00025	MANIFOLD-GAS, 6 BURNER (M1, M4, M7)
71	0163F00017	BECKETT BURNER (QTY 6)
81	0121L01362	BRACKET, BURNER 5 (M3, M6, M9)
81	0121L01363	BRACKET, BURNER 6 (M1, M4, M7)
81	0121L02668	BURNER BRACKET-3 (M2, M5, M8)
91	0131M00121	BLOWER-ID COMBUSTION (M2, M5, M8)
91	0131L00002	VENT MOTOR (M1, M3, M4, M6, M7, M9)
101	0270L01363	ASSY, PANEL, PARTITION/TUBE, 3 (M2, M5, M8)
101	0270L01361	ASSY, PANEL, PARTITION/TUBE, 5 (M3, M6, M9)
101	0270L01360	ASSY, PANEL, PARTITION/TUBE, 6 (M1, M4, M7)
111	10123532	LIMIT-RESET MAN-GRAY (M2, M5, M8)
111	10123529	LIMIT-RESET MAN-GREEN (M1, M3, M4, M6, M7, M9)
131	0121L00053	BRACKET-FLAME ROLLOUT
181	0154L00018	GASKET-ID BLOWER PLATE 2,4 (M2, M5, M8)
181	0154L00017	GASKET-ID BLOWER PLATE 6 (M1, M3, M4, M6, M7, M9)
201	0121L02662	PLATE, ID BLOWER (M2, M5, M8)
201	0121L03335	PLATE, ID BLOWER (M3, M6, M9)
201	0121L03575	PLATE,ID BLOWER (M1, M4, M7)
251	0154L00007	GASKET-BLOWER/ORIFICE PLATE (M1, M3, M4, M6, M7, M9)
251	0154L00020	GASKET-ID BLOWER (M2, M5, M8)
261	0121L01355	FLUE CHANNEL (M1, M3, M4, M6, M7, M9)
261	0121L00277	FLUE-CHANNEL (M2, M5, M8)
271	0121L01356	FLUE SIDE COVER (M1, M3, M4, M6, M7, M9)
271	0121L00278	FLUE-SIDE COVER (M2, M5, M8)
281	0163L00072	SCREEEN-FLUE
451	0121L03948	BRACKET, PRIMARY LIMIT
461	0130F00035	LIMIT, PRIMARY
521	0121L03320	BRACKET, TUBE SUPPORT
531	0121L03125	BRACKET, TUBE (QTY 6)
541	0121L02935	BRACKET, SUPPORT, TUBE
NS	0121F00468	ORIFICE BRACKET-BURNER 3 (M2, M5, M8)
NS	0121F00466	ORIFICE BRACKET-BURNER 5 (M3, M6, M9)
NS	0121F00465	ORIFICE BRACKET-BURNER 6 (M1, M4, M7)

Expanded Model Nomenclature

M1 - DHG0723WH00001FAA
M2 - DHG0723WL00001FAA
M3 - DHG0723WM00001FAA
M4 - DHG0724WH00001FAA
M5 - DHG0724WL00001FAA
M6 - DHG0724WM00001FAA
M7 - DHG0727WH00001FAA
M8 - DHG0727WL00001FAA
M9 - DHG0727WM00001FAA

ACCESSORY PARTS LIST

NOTE: NOT ALL OPTIONS AVAILABLE FOR ALL PRODUCTS

FOR ACCESSORY PARTS SEE THE FOLLOWING PART MANUAL

RP-FIOPSC*
RP-EHS[D/B]SC*
RP-EHX[D/B]SC*

ACCESSORY PARTS

Ref. No:	Part No:	Description:	Ref. No:	Part No:	Description:

Image 1:

NS	RP-FIOPS*	ACCESSORY RP MANUAL
NS	RP-HXS*	HEAT EXCHANGE MANUAL
NS	RP-EHS(D/B)S*	HEATER KIT RP MANUAL
NS	RP-EHX(D/B)S*	HEATER KIT RP MANUAL

Expanded Model Nomenclature

M1 - DHG0723WH00001FAA
M2 - DHG0723WL00001FAA
M3 - DHG0723WM00001FAA
M4 - DHG0724WH00001FAA
M5 - DHG0724WL00001FAA
M6 - DHG0724WM00001FAA
M7 - DHG0727WH00001FAA
M8 - DHG0727WL00001FAA
M9 - DHG0727WM00001FAA