- To avoid possible illness or death of the building occupants, do NOT locate outside air intake device (economizer, manual fresh air intake, motorized fresh air intake) too close to an exhaust outlet, gas vent termination, or plumbing vent outlet. For specific distances required, consult local codes.
- Allow minimum clearances from the enclosure for fire protection, proper operation, and service access (see unit clearances). These clearances must be permanently maintained.
- When the unit is heating, the temperature of the return air entering the unit must be a minimum of 55° F.

**Ground Level Installations Only:**

- When the unit is installed on the ground adjacent to the building, a level concrete (or equal) base is recommended. Prepare a base that is 3" larger than the package unit footprint and a minimum of 3" thick.
- The base should also be located where no runoff of water from higher ground can collect in the unit.

**Roof top Installations Only:**

- To avoid possible property damage or personal injury, the roof must have sufficient structural strength to carry the weight of the unit(s) and snow or water loads as required by local codes. Consult a structural engineer to determine the weight capabilities of the roof.
- The unit may be installed directly on wood floors or on Class A, Class B, or Class C roof covering material.
- To avoid possible personal injury, a safe, flat surface for service personnel should be provided.

**Unit Precautions**

- Do not stand or walk on the unit.
- Do not drill holes anywhere in panels or in the base frame of the unit except where indicated. Unit access panels provide structural support.
- Do not remove any access panels until unit has been installed on roof curb or field supplied structure.
- Do not roll unit across finished roof without prior approval of owner or architect.
- Do not skid or slide on any surface as this may damage unit base. The unit must be stored on a flat, level surface. Protect the condenser coil because it is easily damaged.

**Roof Curb Installations Only:**

Curb installations must comply with local codes and should be done in accordance with the established guidelines of the National Roofing Contractors Association.

Proper unit installation requires that the roof curb be firmly and permanently attached to the roof structure. Check for adequate fastening method prior to setting the unit on the curb.

Full perimeter roof curbs are available from the factory and are shipped unassembled. Field assembly, squaring, leveling and mounting on the roof structure are the responsibility of the installing contractor. All required hardware necessary for the assembly of the sheet metal curb is included in the curb accessory.

**WARNING**

**To prevent possible equipment damage, property damage, personal injury or death, the following bullet points must be observed when installing the unit.**

- Sufficient structural support must be determined prior to locating and mounting the curb and package unit.
- Ductwork must be constructed using industry guidelines. The duct work must be placed into the roof curb before mounting the package unit. Our full perimeter curbs include duct connection frames to be assembled with the curb. Cantilevered type curbs are not available from the factory.
- Curb insulation, cant strips, flashing and general roofing material are furnished by the contractor.
- The curbs must be supported on parallel sides by roof members.
- The roof members must not penetrate supply and return duct opening areas as damage to the unit might occur.

**NOTE: The unit and curb accessories are designed to allow vertical duct installation <u>before</u> unit placement. Duct installation <u>after</u> unit placement is not recommended.**

**CAUTION**

**All curbs look similar. To avoid incorrect curb positioning, check job plans carefully and verify markings on curb assembly. Instructions may vary in curb styles and supersedes information shown.**

See the manual shipped with the roof curb for assembly and installation instructions.

## CLEARANCES

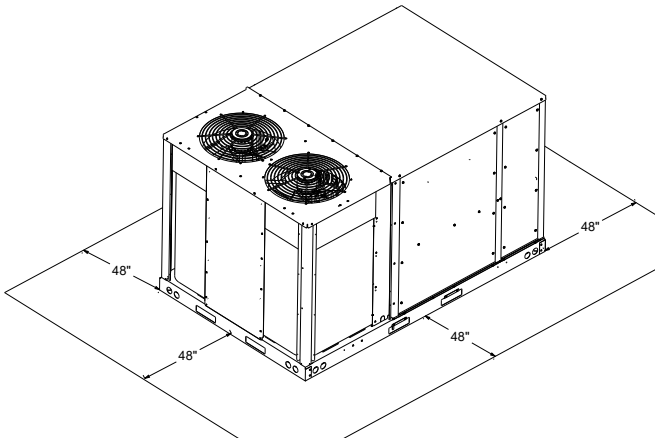


**Unit Clearances**
**Figure 1**

**In situations that have multiple units, a 48" minimum clearance is required between the condenser coils.*
Adequate clearance around the unit should be kept for safety, service, maintenance, and proper unit operation. A clearance of 48" is recommended on all sides of the unit to facilitate possible parts replacement, to allow service access and to insure proper ventilation and condenser airflow. The top of the unit should be completely unobstructed. If units are to be located under an overhang, there should be a minimum of 48” clearance and provisions made to deflect the warm discharge air out from the overhang. The unit should be installed remote from all building exhausts to inhibit ingestion of exhaust air into the unit fresh air intake.

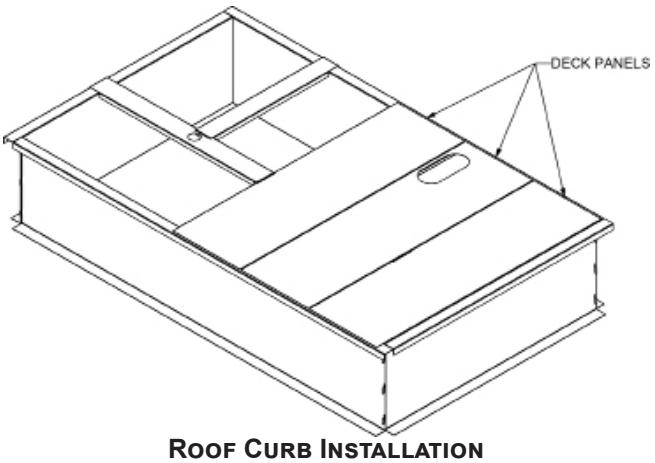


**Roof Curb Installation**
**Figure 2**

## ROOF CURB POST-INSTALLATION CHECKS

After installation, check the top of the curb, duct connection frame and duct flanges to make sure gasket has been applied properly. Gasket should be firmly applied to the top of the curb perimeter, duct flanges and any exposed duct connection frame. If gasket is loose, re-apply using strong weather resistant adhesive.

| Knocked Down Roof Curbs | | |
|---|---|---|
| **UNIT TONNAGE** | **DESCRIPTION** | **PART NUMBER** |
| 7.5 to 12.5 | Curb 14" Tall | 0270L01153 |
| | Curb 24" Tall | 0270L01154 |

**Protrusion**
Inspect curb to ensure that none of the utility services (electric) routed through the curb protrude above the curb.

**NOTE: If fasteners are used to secure the duct to the curb, these should be installed horizontal into the duct curb flange.**

**CAUTION**

**If protrusions exist, do not attempt to set unit on curb.**

## ROOF TOP DUCT CONNECTIONS

Install all duct connections on the unit before placing the unit on rooftop.

**Horizontal Discharge**
Refer to IOD-7082 included in the literature pack for installing horizontal duct covers.

Flexible duct connectors between the unit and ducts are recommended. Insulate and weatherproof all external ductwork and joints as required and in accordance with local codes.

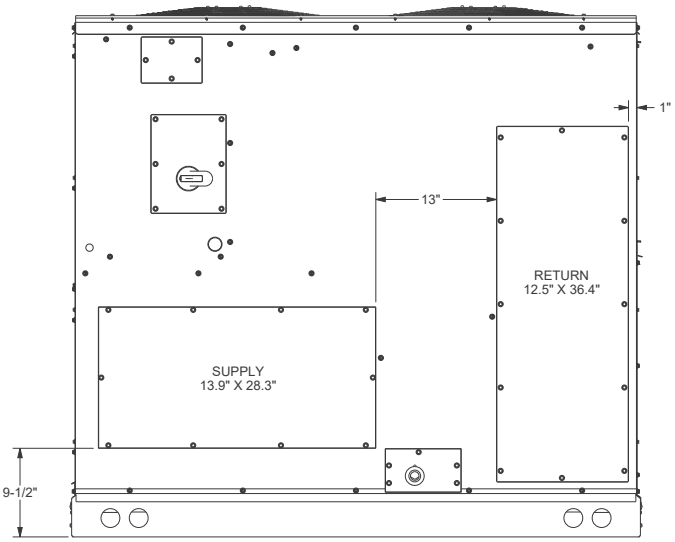


**Horizontal Discharge Duct Connections**
**Figure 3**

## RIGGING DETAILS

**WARNING**

**To prevent property damage, the unit should remain in an upright position during all rigging and moving operations. To facilitate lifting and moving when a crane is used, place the unit in an adequate cable sling.**

**CAUTION**

**Do not lift units two at a time. Provisions for forks have been included in the unit base frame. Minimum fork length is 72" to prevent damage to the unit.**

**Provisions for forks have been included in the unit base frame. No other fork locations are approved.**

**WARNING**

**To prevent possible equipment damage, property damage, personal injury or death, the following bullet points must be observed when installing the unit.**

- Unit must be lifted by the four lifting holes located at the base frame corners.
- Lifting cables should be attached to the unit with shackles.
- The distance between the crane hook and the top of the unit must not be less than 60".
- Two spreader bars must span over the unit to prevent damage to the cabinet by the lift cables. Spreader bars must be of sufficient length so that cables do not come in contact with the unit during transport. Remove wood struts mounted beneath unit base frame before setting unit on roof curb. These struts are intended to protect unit base frame from fork lift damage. Removal is accomplished by extracting the sheet metal retainers and pulling the struts through the base of the unit. Refer to rigging label on the unit.
- Your unit may be equipped with a steel shipping brace located underneath the unit (under compressors). If installing on a roof curb, the brace **MUST** be removed. Follow the following instructions for removal.

**CAUTION**

**When unit is suspended, boards and shipping brace will drop when screws are removed. To prevent personal injury, STAND CLEAR. Remove fork hole brackets, boards and shipping brace from bottom of unit before placing unit onto curb.**

**Before installing this unit on a roof curb:**

1. Remove wooden struts per installation instructions. *These are the struts that are located in the fork holes and are used to protect the unit from damage while lifting with forks.*
2. Locate and remove the four (4) screws that attach the shipping brace to the side rails. There will be two (2) screws on each side of the unit. *See Figure 4*

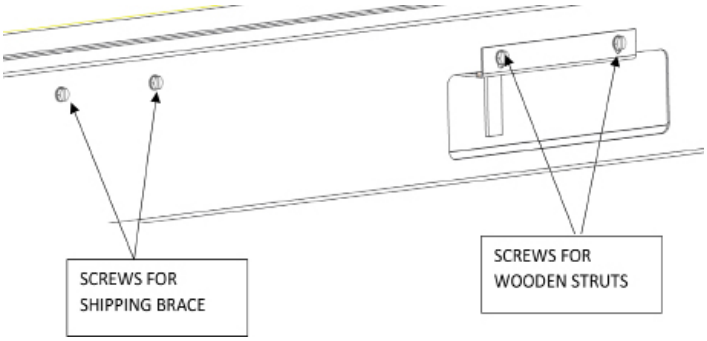


**Shipping Brace Screw and Wooden Struts**
**Figure 4**

3. Lift unit per the "Rigging Details" section of the installation instructions, observing all warnings and cautions. Lift the unit high enough off the ground to reach under and grasp the shipping brace.
4. Rotate the brace by tapping the ends until the brace falls free from the unit.
5. Dispose of the brace appropriately.

**Important: If using bottom discharge with roof curb, ductwork should be attached to the curb prior to installing the unit. Ductwork dimensions are shown in Roof Curb Installation Instructions.**

Refer to the Roof Curb Installation Instructions for proper curb installation. Curbing must be installed in compliance with the National Roofing Contractors Association Manual.