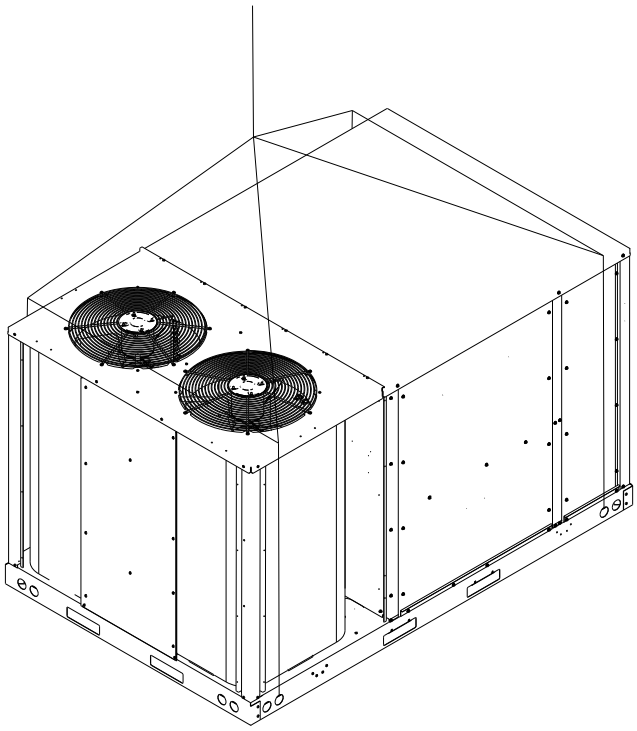

Unit Rigging
Figure 5

To assist in determining rigging requirements, unit weights and center of gravity are shown as follows:

WEIGHTS AND CENTER OF GRAVITY

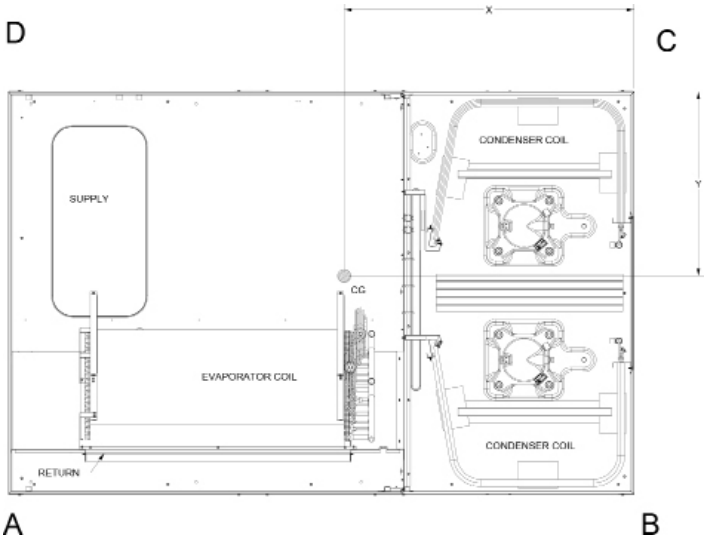

Corner and center of gravity locations
Figure 6

NOTE: Unit should be lifted at a point above center of gravity.

DSC WEIGHTS (lbs)				
Data	7.5T	8.5T	10T	12.5T
Corner weight- A	243.25	363.25	229.25	231.25
Corner weight- B	226.25	142.25	280.25	306.25
Corner weight- C	274.25	202.25	235.25	274.25
Corner weight- D	271.25	319.25	325.25	341.25
Unit operating weight	1015	1027	1070	1153
Unit shipping weight	1087	1099	1142	1225
X Center (inches)	30.6	30.6	30.6	30.6
Y Center (inches)	42.7	42.7	42.7	42.7

DSH WEIGHTS (lbs)			
Data	7.5T	8.5T	10T
Corner weight- A	254	254	257
Corner weight- B	271	271	274
Corner weight- C	349	349	352
Corner weight- D	283	283	286
Unit operating weight	1157	1157	1169
Unit shipping weight	1229	1229	1241
X Center (inches)	27.8	27.8	27.8
Y Center (inches)	41.3	41.3	41.3

The numbers may slightly vary depending on installed options. These weights are without accessories installed.

CAUTION

To prevent severe damage to the bottom of the unit, do not fork lift unit after wood struts have been removed.

Bring condenser end of unit into alignment with the curb first. Lower unit carefully onto roof mounting curb. When a rectangular cantilever curb is used, care should be taken to center the unit. Check for proper alignment and orientation of supply and return openings with duct.

Rigging Removal

CAUTION

To prevent damage to the unit, do not allow crane hooks and spreader bars to rest on the roof of the unit.

Remove spreader bars, lifting cables and other rigging equipment.

ELECTRICAL WIRING

WARNING

HIGH VOLTAGE!
Disconnect all power before servicing or installing this unit. Multiple power sources may be present. Failure to do so may cause property damage, personal injury or death.

WARNING

HIGH VOLTAGE!
To avoid personal injury or death due to electrical shock, do not tamper with factory wiring. The internal power and control wiring of these units are factory-installed and have been thoroughly tested prior to shipment. Contact your local representative if assistance is required.

CAUTION

To prevent damage to the wiring, protect wiring from sharp edges. Follow national electrical code and all local codes and ordinances. Do not route wires through removable access panels.

CAUTION

Conduit and fittings must be weather-tight to prevent water entry into the building.

For unit protection, use a fuse or HACR circuit breaker that is in excess of the circuit ampacity, but less than or equal to the maximum overcurrent protection device. DO NOT EXCEED THE MAXIMUM OVERCURRENT DEVICE SIZE SHOWN ON UNIT DATA PLATE.

All line voltage connections must be made through weatherproof fittings. All exterior power supply and ground wiring must be in approved weatherproof conduit.

The main power supply wiring to the unit and low voltage wiring to accessory controls must be done in accordance with these instructions, the latest edition of the National Electrical Code (ANSI/NFPA 70), and all local codes and ordinances.

The main power supply shall be three-phase, three wire with a proper ground.

The unit is factory wired for the voltage shown on the unit's data plate.

NOTE: If supply voltage is 208V, lead on primary of transformer(s) must be moved from the 240V to the 208V tap. Refer to wiring diagram on unit for details.

Main power wiring should be sized for the minimum circuit ampacity shown on the unit's database. Size wires in accordance with the ampacity tables in Article 310 of the National Electrical Code. If long wires are required, it may be necessary to increase the wire size to prevent excessive voltage drop. Wires should be sized for a maximum of 3% voltage drop.

CAUTION

To avoid risk of property damage, personal injury or fire, use only copper conductors.

CAUTION

To prevent improper and dangerous operation due to wiring errors, label all wires prior to disconnection when servicing controls. Verify proper operation after servicing.

NOTE: A weather-tight disconnect switch, properly sized for the unit total load, must be field or factory installed. An external field supplied disconnect may be mounted on the exterior panel.

Ensure the data plate is not covered by the field-supplied disconnect switch.

- Some disconnect switches are not fused. Protect the power leads at the point of distribution in accordance with the unit data plate.
- The unit must be electrically grounded in accordance with local codes or, in the absence of local codes, with the latest edition of the National Electrical Code ANSI/NFPA 70, and/or the Canadian Electrical Code, CSA C22.1, Part 1. A ground lug is provided for this purpose. Do not use the ground lug for connecting a neutral conductor.
- Connect power wiring to the electrical power block located within the main control box.

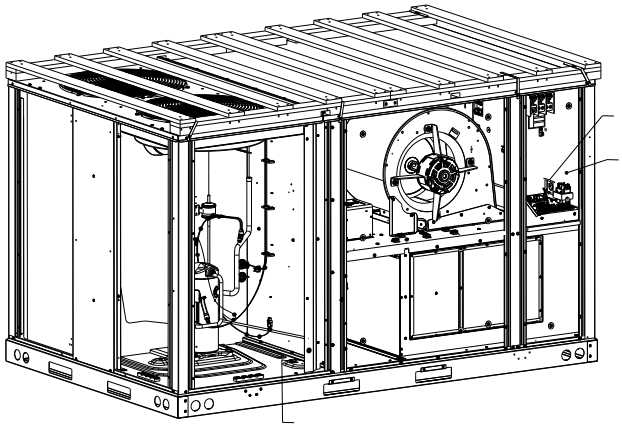

Figure 7A

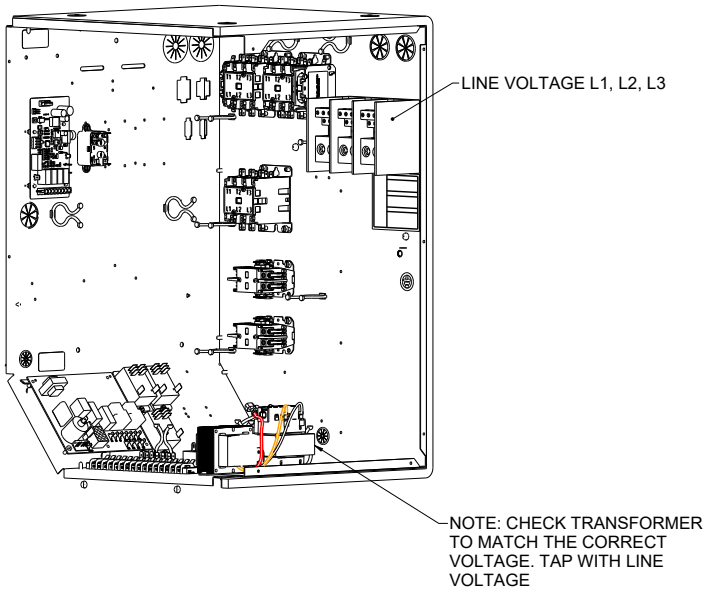

CONTROL BOX
Figure 7B

NOTE: DEPENDING ON THE OPTIONS INSTALLED, THE LOCATION OF THE COMPONENTS MAY VARY IN SOME MODELS.

WARNING

Failure of unit due to operation on improper line voltage or with excessive phase unbalance constitutes product abuse and may cause severe damage to the unit electrical components.

Areas Without Convenience Outlet

It is recommended that an independent 115V power source be brought to the vicinity of the roof top unit for portable lights and tools used by the service mechanic.

NOTE: Refer to local codes for requirements. These outlets can also be factory installed.

Units installed on Roof Tops

Main power and low voltage wiring may enter the unit through the condenser end of unit or through the roof curb. Install conduit connectors through the designated base pan entrance location. External connectors must be weatherproof. All holes in the unit base must be sealed (including those around conduit nuts) to prevent water leakage into building. All required conduit and fittings are to be field supplied.

Supply voltage to roof top unit must not vary by more than 10% of the value indicated on the unit data plate. Phase voltage unbalance must not exceed 2%. Contact your local power company for correction of improper voltage or phase unbalance.

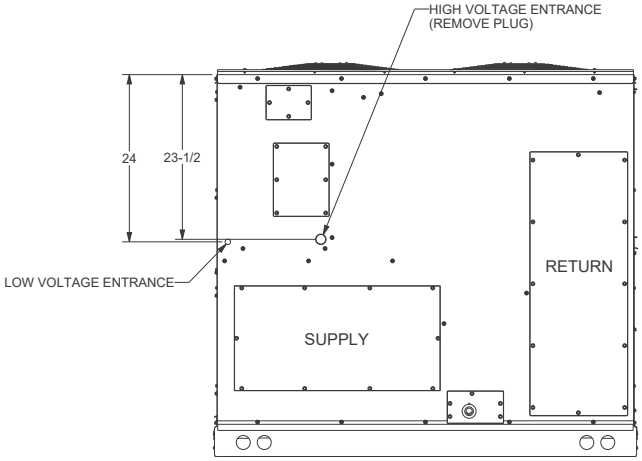

Figure 8A

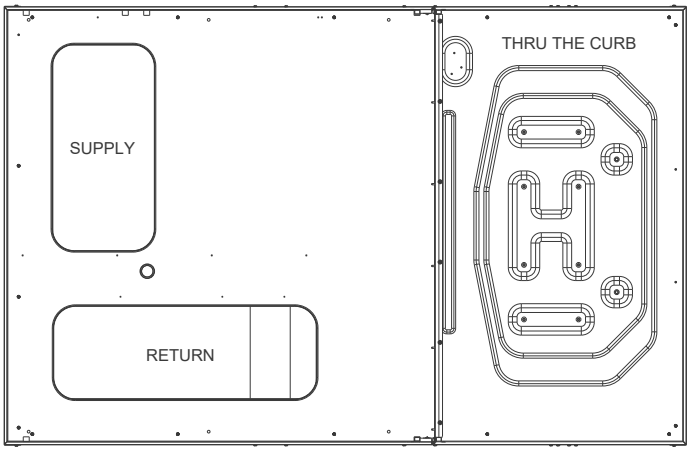

ELECTRICAL ENTRANCE AND THRU CURB
Figure 8B

"Through the Base Pan Kit" Part Numbers
TTBCKHE02
TTBCKHE02FI (Factory Kit)

Low Voltage Control Wiring

1. A 24V thermostat must be installed for unit operation.
2. Locate thermostat or remote sensor in the conditioned space where it will sense average temperature. Do not locate the device where it may be directly exposed to supply air, sunlight or other sources of heat. Follow