UPFLOW/DOWNFLOW COILS INSTALLATION INSTRUCTIONS

1. Important Safety Instructions

The following symbols and labels are used throughout this manual to indicate immediate or potential safety hazards. It is the owner's and installer's responsibility to read and comply with all safety information and instructions accompanying these symbols. Failure to heed safety information increases the risk of personal injury, property damage, and/or product damage.

RECOGNIZE THIS SYMBOL AS A SAFETY PRECAUTION.

WARNING

HIGH VOLTAGE
Disconnect all power before servicing or installing this unit. Multiple power sources may be present. Failure to do so may cause property damage, personal injury or death.

WARNING

Only personnel that have been trained to install, adjust, service, maintenance or repair (hereinafter, "service") the equipment specified in this manual should service the equipment.

This equipment is not intended for use by persons (including children) with reduced physical, sensory or mental capacities, or lack of experience and knowledge, unless they have been given supervision or instruction concerning use of the appliance by a person responsible for their safety.

Children should be supervised to ensure that they do not play with the equipment.

The manufacturer will not be responsible for any injury or property damage arising from improper supervision, service or service procedures. If you service this unit, you assume responsibility for any injury or property damage which may result. In addition, in jurisdictions that require one or more licenses to service the equipment specified in this manual, only licensed personnel should service the equipment. Improper supervision, installation, adjustment, servicing, maintenance or repair of the equipment specified in this manual, or attempting to install, adjust, service or repair the equipment specified in this manual without proper supervision or training may result in product damage, property damage, personal injury or death.

WARNING

Do not bypass safety devices.

WARNING

If any hot work is to be conducted on the refrigerating equipment or an associated parts, appropriate fire extinguishing equipment shall be available on hand. Have a dry powder or CO_2 fire extinguisher adjacent to the hot work area.
Ensure that the area is in the open or that it is adequately ventilated before breaking into the system or conducting any hot work. A degree of ventilation shall continue during the period that the work is carried out. The ventilation should safely disperse any released refrigerant and preferably expel it externally into the atmosphere.

QUEBEC DISCLOSURE REGARDING AVAILABILITY OF REPLACEMENT PARTS, REPAIR SERVICES AND INFORMATION FOR MAINTENANCE AND REPAIR: Daikin Comfort Technologies Manufacturing, Inc. (Daikin) does not guarantee the availability of (1) replacement parts; (2) repair services; and (3) information necessary to maintain or repair products, within the meaning of section 39.1 of the Consumer Protection Act, CQLR, c P-40.1 and section 79.18 of the Regulation respecting the application of the Consumer Protection Act, CQLR, c P-40.1, r. 3.

AVIS POUR LE QUÉBEC CONCERNANT LA DISPONIBILITÉ DES PIÈCES DE RECHANGE, DES SERVICES DE RÉPARATION ET DES RENSEIGNEMENTS POUR L'ENTRETIEN ET LA RÉPARATION : Daikin Comfort Technologies Manufacturing, Inc. (Daikin) ne garantit pas la disponibilité (1) des pièces de rechange, (2) des services de réparation et (3) des renseignements pour l'entretien et la réparation, au sens de l'article 39.1 de la Loi sur la protection du consommateur, RLRQ c P-40.1 et de l'article 79.18 du Règlement d'application de la Loi sur la protection du consommateur, RLRQ c P-40.1, r 3.

2. Shipping Inspection

This equipment is approved for use with R-32 refrigerant only. Upon receiving the product, inspect it for damage from shipment. Shipping damage, and subsequent investigation is the responsibility of the carrier. Verify the model number, specifications, and accessories are correct prior to installation. The distributor or manufacturer will not accept claims from dealers for transportation damage or installation of incorrectly shipped units.

2.1 Handling

Use caution when transporting/carrying unit. Do not carry unit with hooks or sharp object. The preferred method of carrying the unit after arrival at the job site is to carry by two-wheel hand truck from the back or sides or by hand by carrying at the cabinet corners. Take proper precautions when carrying unit to avoid any damage to the piping.

19001 Kermier Rd., Waller, TX 77484
© 2026 Daikin Comfort Technologies Manufacturing, Inc.
www.daikincomfort.com • www.goodmanmfg.com • www.amana-hac.com
AMANA® / TM 2026 Amana. Manufactured under license by Daikin. Limited warranty provided by the manufacturer. All trademarks are the property of their respective owners.
IO-4012F
10/2026

3. Codes & Regulations

This product is designed and manufactured to comply with national codes such as ASHRAE 15, ASHRAE 15.2, IAPMO Uniform Mechanical Code, ICC, International Mechanical Code, or CSA B52. The product shall be installed in accordance with national wiring regulations. Installation in accordance with such codes and/or prevailing local codes/regulations is the responsibility of the installer. Compliance with national gas regulations shall be observed. The manufacturer assumes no responsibility for equipment installed in violation of any codes or regulations.

The United States Environmental Protection Agency (EPA) has issued various regulations regarding the introduction and disposal of refrigerants. Failure to follow these regulations may harm the environment and can lead to the imposition of substantial fines. Should you have any questions please contact the local office of the EPA.

NOTE: The installer must refer to section 11.10, Table 3 and section 12 for the maximum possible refrigerant charge and minimum (air conditioned) room area which must be recorded on the serial plate.

4. Replacement Parts

Inspect the unit to verify all required components are present and intact. Report any missing components immediately to the manufacturer or to the distributor. Make sure to include the full product model number and serial number when reporting and/or obtaining service parts. Replacement parts for this product are available through your contractor or local distributor. For the location of your nearest distributor contact:

HOMEOWNER SUPPORT
DAIKIN COMFORT TECHNOLOGIES
MANUFACTURING, INC.
19001 KERMIER ROAD
WALLER, TEXAS 77484
855-770-5678

5. Pre-Installation Instructions

The appliance shall be installed in accordance with national wiring regulations. This product was tested at an external static pressure of 0.66 WC. None of the components in this product line are designed or approved to be suitable for outdoor use.

Refrigerant lines must be routed depending on configuration of unit to maintain the required 24” minimum clearance for service.

This appliance is equipped with a leak detection sensor which must be wired through the connector on the furnace PCB or Non-A2L Furnace Integration Kit.

The R-32 Sensor must be installed and powered for service. Ensure that the grommet is installed through the access panel knockout hole. Sensor bracket assemblies are shipped with two zip ties, one of which is designed for strain relief. The zip tie shown in Figure 1, detail A, must be kept attached to the sensor bracket assy. Detail B highlights the zip tie that must be cut during installation in order to release the wire bundle.

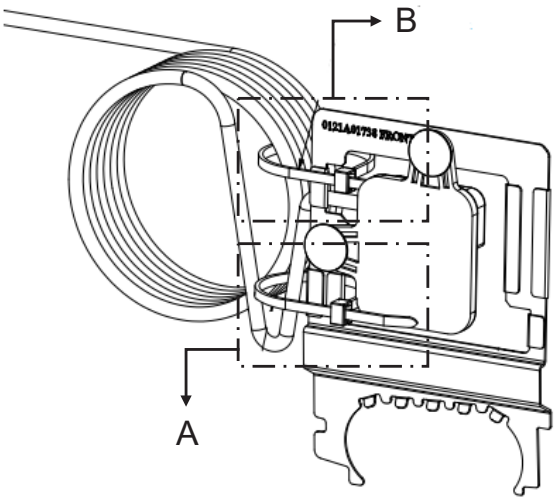

Figure 1 - Isometric view of sensor bracket assy (back view)

Follow one of the 3 scenarios below to determine where the R-32 sensor needs to be connected to:

Scenario 1: Amana® Brand / Goodman / Daikin Furnace PCB with R-32 sensor compatibility.
The leak detection sensor must be wired directly to the furnace. Follow routing diagram as shown in Figures 4 or 5 depending on orientation of install. This wiring is intended to be passed through the access hole on the furnace. If a hole must be cut into the furnace, ensure that the wiring is well protected from mechanical damage and that the hole is free from burrs or sharp edges. Utilize a protective coating for all exposed metallic edges to prevent corrosion. Verify that the A2L function (this is required for R-32 integration)is enabled on the furnace board PCB. Refer to the furnace Installation Instructions for further instruction on how to toggle this function from disabled to enabled. The A2L verification step as described on the furnace Installation Instructions must be completed before the unit is commissioned. If the test is not successful, call 1-855-DAIKIN1, option 3, for further assistance.

Scenario 2: Amana® Brand / Goodman / Daikin Furnace or Modular Blower PCB with no R-32 sensor compatibility.
The leak detection sensor must be wired directly to the Non-A2L Furnace Integration Kit and installed as a pass-through to the non-A2L furnace control board. For instructions on how to correctly wire the Non-A2L Furnace Integration Kit refer to the kit Installation Instructions. Always select a furnace speed tap that will satisfy the minimum airflow required for each system as per table 3.

Scenario 3: All other OEM Furnaces.
The availability of mitigation mode, or equivalent, must be checked through the furnace model manufacturer Installation Instructions. Please follow relevant instructions to disable mitigation mode, or equivalent. Once this step is complete follow instructions of scenario 2. If mitigation mode, or equivalent, is present but can't be disabled the furnace must be replaced. If mitigation mode, or equivalent, is not available follow the instructions on scenario 2.

Under no circumstance should the system be charged with refrigerant at a capacity greater than the refrigerant charge listed on the serial plate. This value indicates refrigerant charge at or above 30% GREATER than the intended charge with the longest line-sets.

If additional charge is required, you must contact Daikin Comfort's Homeowner Support Line.

5.1 Preparation

Keep this document with the unit. Carefully read all instructions for the installation prior to installing product. Make sure each step or procedure is understood and any special considerations are taken into account before starting installation. Assemble all tools, hardware and supplies needed to complete the installation. Some items may need to be purchased locally. Make sure everything needed to install the product is on hand before starting.

5.2 Clearances

Consult all appropriate regulatory codes prior to determining final clearances. In installations that may lead to physical damage (i.e. a garage) it is advised to install a protective barrier to prevent such damage. Always install units such that a positive slope in condensate line (¼" per foot) is allowed.

Further, any joints made in the installation between parts of the refrigerating system must be accessible for maintenance purposes.

NOTE: Furnace application requires that the installer MUST review and strictly follow ALL furnace installation clearance guidelines. Failure to do so may result in property / equipment damage, personal injury or death.

CONSULT ALL APPROPRIATE REGULATORY CODES WHEN DETERMINING FINAL CLEARANCES.

WARNING

When installed in a room with an area less than that outlined in table 3, that room shall be without continuously operating open flames (for example an operating gas appliance) or other potential ignition sources (for example an operating electric heater, hot surfaces).

If the uncased coil is to be installed on top of a gas furnace, allow enough space between the top of the furnace and the bottom of the plastic coil drain pan to have a free flow of air. A minimum of 2.0" distance from the top of the furnace and the bottom of the coil pan is required.

NOTE: The coil must be installed with the line set and drain opening to the front of the furnace.

6. System Matches

The entire system (combination of indoor and outdoor sections) must be manufacturer approved and Air Conditioning, Heating, and Refrigeration Institute (AHRI) listed.

NOTE: Installation of unmatched systems is not permitted.

7. Application Information

WARNING

Auxiliary devices which may be a potential ignition source are not to be installed in the duct work. Such potential ignition sources include hot surfaces with a temperature exceeding 650°C and electric switching devices. For example, electronic air filters are a potential ignition source.

WARNING

Only auxiliary devices approved by the appliance manufacturer or declared suitable with the refrigerant shall be installed in connecting ductwork. If an existing device is not approved by the appliance manufacturer for use with the refrigerant, The device must be removed or disconnected.

Coils are designed for indoor installation only and must be installed downstream (discharge air) of the furnace. The CAPTA product line may be installed in upflow or downflow orientations.

8. Condensate Drain Piping

In all cooling applications where condensate overflow may cause damage, a secondary drain pan must be provided by the installer and placed under the entire unit with a separate drain line properly sloped and terminated in an area visible to the owner. This secondary drain pan can provide extra protection to the area under the unit should the primary drain plug up and overflow. For coils with "A" cabinets (14" wide), use float switch if secondary drain line is not installed. Refer to product nomenclature from product specification literature to identify coil models with "A" cabinets. As expressed in our product warranty, we will not be liable for any damages, structural or otherwise due to the failure to follow this installation requirement.

Condensate drain connections are located in the drain pan at the bottom of the coil/enclosure assembly. Use the female (¾" FPT) threaded fitting that protrudes outside of the enclosure for external connections. Any suitable plastic or metal piping may be used and should be hand tightened to a torque of no more than 37 in-lbs. to prevent damage to the drain pan connection. An insertion depth between .36 to .49 inches (3-5 turns) should be expected at this torque. Insulate PVC drain lines/pipes with high heat resistive tape within 1" furnace flue/vent pipe. Foil-Mastic Sealant tape is the preferred wrapping material.

1. Ensure drain pan hole is NOT obstructed.
2. To prevent potential sweating and dripping on finished space, it may be necessary to insulate the condensate drain line located inside the building. Use Armaflex® or similar material.

A secondary condensate drain connection, now called for by many building codes, has been provided. Pitch the drain line ¼" per foot to provide free drainage. Provide required support to drain line to prevent bowing. Install a condensate trap in the primary drain line to ensure proper drainage. If the secondary drain line is required, run the line separately from the primary drain and end it where condensate discharge can be easily seen.

CAUTION

If secondary drain is not installed, the secondary access must be plugged.

9. Plastic Drain Pan Application

WARNING

Do not use the coil Drain pan shipped with the unit on oil furnaces or any application where the temperature of the drain pan may exceed 300°F. A high temperature drain pan such as kits HTP7-A, -B, -C, and -D for normal cabinet widths of 14, 17.5, 21 and 24.5 inches, respectively, should be used for applications where the temperature exceeds 300°F and below 450°F. A field fabricated metal drain pan can also be used for applications where temperature exceeds 300°F. Failure to follow this warning may result in property damage and/or personal injury.

NOTE: Water coming from the secondary line means the coil primary drain is plugged and needs immediate attention. Install a trap in the drain line below the bottom of the drain pan (Figure 2). If using a copper drain line, solder a short piece of pipe, minimum 6" length, to the connector before installing a drain fitting.

DO NOT over torque the ¾" copper connector to the plastic drain connection. Using a wet rag or heatsink material on the short piece to protect the plastic drain pan, complete the drain line installation. Use Figure 3 as a template for typical drain pipe routing. This figure shows how to avoid interference with vent piping.

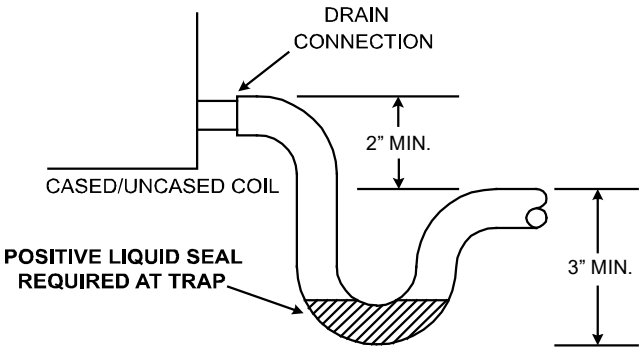

Figure 2

The appliance shall be stored so as to prevent mechanical damage from occurring.

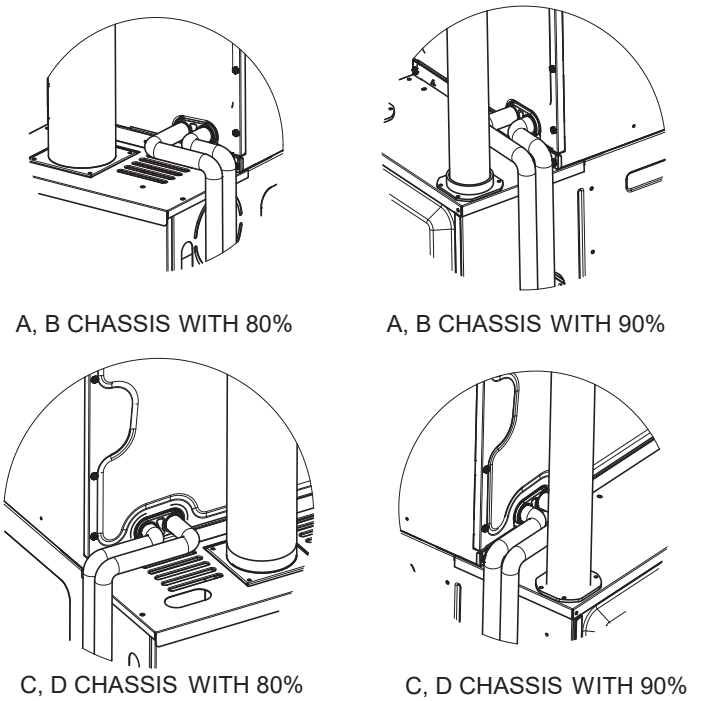

Figure 3

10. Sensor and Accessory Wiring

Refer to Table 3 for minimum conditioned room area requirements.

R-32 sensor fault codes should be referenced through the corresponding R-32 equipped furnace or accessory IO manuals. It is the installer's responsibility to ensure that mitigation mode is operational.

Sensor is not intended for service or repair. If the sensor is not functioning properly, mitigation mode will engage and the sensor must be replaced by removing the old sensor from the bracket and re-installing with new push-pins and a zip-tie. The R-32 sensor shall only be replaced with sensors specified by the appliance manufacturer. (Sensor replacement part can be determined through the homeowner support line provided earlier in this document.)

All wiring installed in the field to be used in conjunction with the sensor must meet the following minimum specification:

- 18 AWG
- 1.58mm insulation thickness or protected from damage

If the sensor used in this unit must be routed through the Non-A2L Furnace Integration Kit, then reference the Non-A2L Furnace Integration Kit installation manual for further instructions.

For any and all accessories which may become a potential ignition source, they must be installed to our accessory control board. Ensure that any additional wiring from the cased coil is done so as to protect from damage and wear, avoiding the flue pipe and any joints which may need to be brazed or disconnected for service. If a zone control system is installed in the ductwork attached to this system, the zone controller must be powered through a zoning kit to ensure that the zoning dampers actuate during mitigation mode. Refer to the product specification sheet for the zoning and accessory control kit part number.

Check that wiring will not be subject to wear, corrosion, excessive pressure, vibration, sharp edges or any other adverse environmental effects. The check shall also take into account the effects of aging or continual vibration from sources such as compressors or fans.

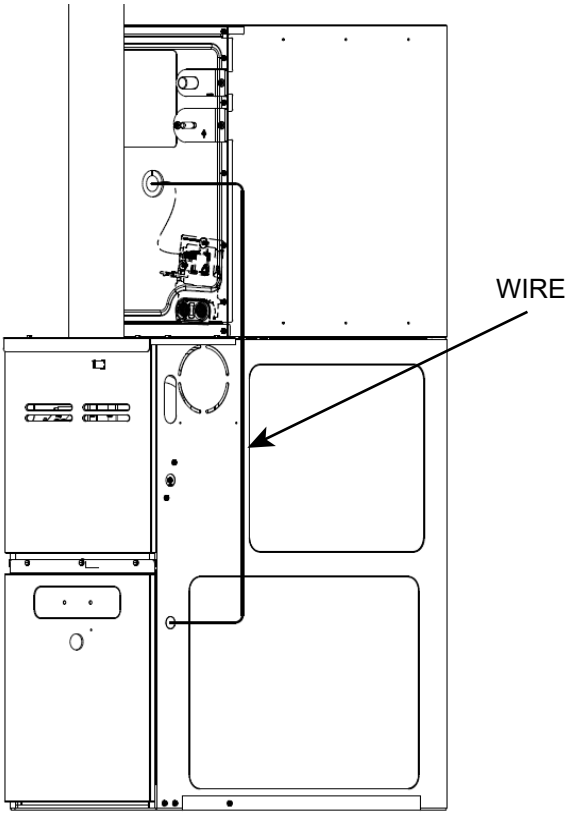

Figure 4 - Upflow Wire Routing

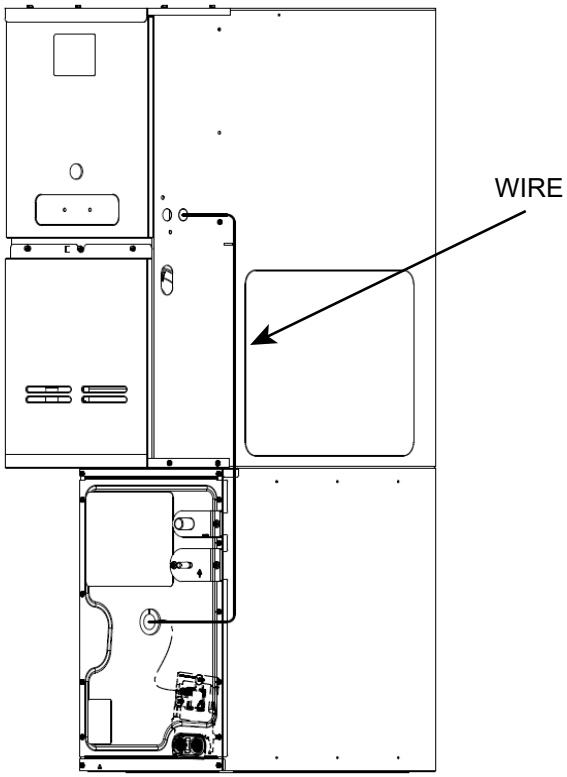

Figure 5 - Downflow Wire Routing

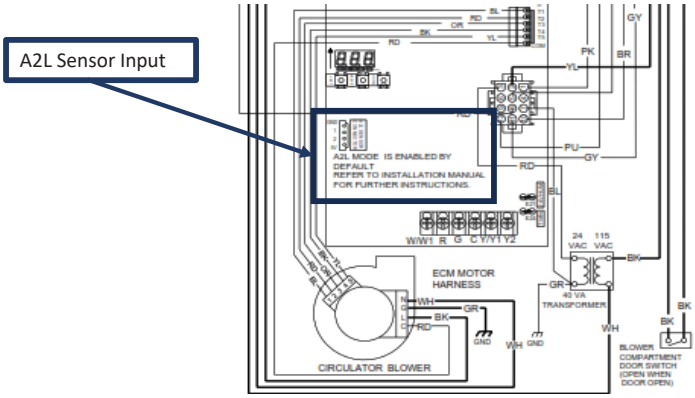

Typical Design for Refrigerant Detection Sensor connectors.
Figure 6

11. Refrigerant Lines

CAUTION

THE COIL IS SHIPPED UNDER PRESSURE WITH A DRY NITROGEN MIXTURE. USE APPROPRIATE SERVICE TOOLS AND FOLLOW THESE INSTRUCTIONS TO PREVENT INJURY.

WARNING

A QUENCHING CLOTH IS STRONGLY RECOMMENDED TO PREVENT SCORCHING OR MARRING OF THE EQUIPMENT FINISH WHEN BRAZING CLOSE TO THE PAINTED SURFACES. USE BRAZING ALLOY OF 5% MINIMUM SILVER CONTENT.

WARNING

ONLY BRAZING TECHNIQUES AND APPROVED MECHANICAL JOINTS SHOULD BE USED TO CONNECT REFRIGERANT TUBING CONNECTIONS. NON-APPROVED MECHANICAL CONNECTORS AND OTHER METHODS ARE NOT PERMITTED IN THIS SYSTEM CONTAINING A2L REFRIGERANT. APPROVED MECHANICAL JOINTS WILL BE DETAILED IN THE PRODUCT'S SPECIFICATION SHEETS.

WARNING

WORK SHALL BE UNDERTAKEN UNDER A CONTROLLED PROCEDURE TO MINIMIZE THE RISK OF FLAMMABLE GAS OR VAPOR BEING PRESENT WHILE THE WORK IS BEING PERFORMED.

NOTE: Refrigerant tubing must be routed to allow adequate access for servicing and maintenance of the unit.

Do not handle coil assembly with manifold or flowrator tubes. Doing so may result in damage to the tubing joints. Always use clean gloves for handling coil assemblies.

Follow standards related to ASHRAE 15, ASHRAE 15.2, IAPMO Uniform Mechanical Code, ICC International Mechanical Code or CSA B52 during any installation. Piping must be accessible for inspection prior to being covered or enclosed in compliance with national and local codes.

The indoor equipment and pipes must be securely mounted and guarded such that accidental rupture of equipment cannot occur from such events as moving furniture or reconstruction activities. Field-made refrigerant joints indoors shall be tightness tested. The test method shall have a sensitivity of 5 grams per year of refrigerant or better under a pressure of at least 0.25 times the maximum allowable pressure. No leak shall be detected (Should be leak tight).

Field pipework must be pressure tested with an inert gas and then vacuum tested prior to refrigerant charging according to the following requirements:

11.1 Standing Pressure Test (Recommended before vacuum)

Pressurize the system to the maximum allowable pressure listed in the serial plate using dry nitrogen or dry helium. Allow the pressure to stabilize and hold for at least 15 minutes. The system is considered leak-free if the pressure does not drop below the selected maximum allowable pressure. If, after 15 minutes, the pressure drops, it implies a leak in the system. Proceed with identifying and sealing the leak and repeating the Standing Pressure Test. Proceed to system evacuation using the Deep Vacuum Method. Leak test the system using dry nitrogen or dry helium and soapy water to identify leaks.

NO REFRIGERANT SHALL BE USED FOR PRESSURE TESTING TO DETECT LEAKS.

Proceed to system evacuation using the Deep Vacuum Method.

11.2 Deep Vacuum Method

The Deep Vacuum Method requires a vacuum pump rated for 500 microns or less. This method effectively and efficiently ensures the system is free of non-condensable air and moisture. The Triple Evacuation Method is detailed in the Service Manual for this product model as an alternative. To expedite the evacuation procedure, it is recommended that the Schrader Cores be removed from the service valves using a core-removal tool.

1. Connect the vacuum pump, micron gauge, and vacuum-rated hoses to both service valves. Evacuation must use both service valves to eliminate system mechanical seals.

2. Evacuate the system to less than 500 microns.

3. Isolate the pump from the system and hold the vacuum for 10 minutes (minimum). Typically, pressure will rise slowly during this period. If the pressure rises to less than 1000 microns and remains steady, the system is considered leak-free; proceed to system charging and startup.

4. If pressure rises above 1000 microns but holds steady below 2000 microns, non-condensable air or moisture may remain, or a small leak may be present. Return to step 2: If the same result is achieved, check for leaks and repair. Repeat the evacuation procedure.

5. If pressure rises above 2000 microns, a leak is present. Check for leaks and repair them. Then, repeat the evacuation procedure.

11.3 Tubing Size/Length

For the correct tubing size, follow the specification for the condenser/heat pump. Give special consideration to minimizing the length of refrigerant tubing when installing coils. Refer to Remote Cooling/Heat Pump Technical Publication TP-110* Long Line Set Application for guidelines for line lengths over 80'. Leave a minimum 3" straight in line set from braze joints before any bends.

11.4 Tubing Preparation

All cut ends are to be round, burr free, and cleaned. Any other condition increases the chance of a refrigerant leak. Use a pipe cutter to remove the closed end of the spun closed suction line.

Installation of pipe-work must be kept to a minimum. Pipe-work including piping material, pipe routing and installation must be protected from physical damage and shall not be installed in an unventilated space. Equipment piping in any occupied space shall be installed in such a way to protect against accidental damage in operation and service. Precautions must be taken to avoid excessive vibration or pulsation to refrigeration piping. Protection devices, piping and fittings shall be protected as far as possible against adverse environmental effects, for example, the danger of water collecting and freezing in relief pipes or the accumulation of dirt and debris. Steel pipes and components shall be protected against corrosion with a rustproof coating before applying any insulation. Any solenoid valves and piping in the refrigerant systems must be so designed and installed to minimize the likelihood of hydraulic shock damaging the system. Solenoid valves must not block in liquid refrigerant unless adequate relief is provided to the refrigerant system's low pressure side. Provisions must be made for expansion and contraction of long runs of piping.

WARNING

This unit must be charged with R-32 refrigerant. Ensure that sensor is installed correctly and is operational.

11.5 Brazing

Braze joints should be made only with the connections provided external to the cabinet. Do not alter the cabinet nor braze inside the cabinet. To avoid overheating after brazing, quench all brazed joints with water or a wet rag.

This system must be charged with R-32 refrigerant in order to operate safely.

When breaking into the refrigerant circuit to make repairs – or for any other purpose – conventional procedures shall be used. However, the flammability classification for any refrigerant must be considered. The following procedure shall be adhered to:

1. Safely remove refrigerant following local and national regulations;
2. Evacuate;
3. Purge the circuit with inert gas;
4. Evacuate;
5. Continuously flush or purge with inert gas when using flame to open circuit; and
6. Open the circuit.

NOTE: Use heat trap material or wet cloth behind braze joints to protect TXV and access fittings from overheating during brazing line set connections.

For appliances containing flammable refrigerants, refrigerants purging shall be achieved by breaking the vacuum in the system with oxygen-free nitrogen and continuing to fill until the working pressure is achieved, then venting to atmosphere, and finally pulling down to a vacuum (optional for R-32). This process shall be repeated until no refrigerant is within the system (optional for R-32). When the final oxygen-free nitrogen charge is used, the system shall be vented down to atmospheric pressure to enable work to take place.

The outlet for the vacuum pump shall not be close to any potential ignition sources, and ventilation shall be available.

CAUTION

Applying too much heat to any tube can melt the tube. Torch heat required to braze tubes of various sizes must be proportional to the size of the tube. Service personnel must use the appropriate heat level for the size of the tube being brazed.

11.6 Tubing Connections for TXV Version

WARNING

Field installed TXV Metering devices, including Piston kits and EEV, must be housed within the cabinet. Do not install external of the unit.

TXV models come with factory installed adjustable TXV with the bulb permanently located on the suction tube.

1. Remove coil access panel and rubber grommets.
2. Remove access valve fitting cap and depress the valve stem in access fitting to release pressure. No pressure indicates possible leak.
3. Reinstall the Coil Access Panel & rubber grommets.
4. Remove the spin closure on both the liquid and suction tubes using a tubing cutter. DO NOT USE A CUTTING METHOD THAT WOULD RESULT IN THE GENERATION OF COPPER SHAVINGS OR COPPER DUST.

Saturated Suction Pressure Temperature Chart	
Suction Pressure	Saturated Suction Temperature ºF
PSIG	R32
50	0.57
52	2.06
54	3.51
56	4.94
58	6.33
60	7.69
62	9.03
64	10.34
66	11.62
68	12.88
70	14.12
72	15.34
74	16.53
76	17.70
78	18.86
80	19.99
85	22.75
90	25.41
95	27.97
100	30.44
110	35.16
120	39.59
130	43.79
140	47.76
150	51.55
160	55.17
170	58.64

Table 1

Saturated Liquid Pressure Temperature Chart	
Suction Pressure	Saturated Liquid Temperature ºF
PSIG	R32
200	68.25
210	71.23
220	74.11
225	75.50
235	78.25
245	80.91
255	83.50
265	86.03
275	88.48
285	90.86
295	93.19
305	95.46
325	99.85
355	106.08
375	110.02
405	115.65
415	117.46
425	119.24
435	120.98
445	122.70
475	127.68
500	131.65
525	135.48
550	139.17
575	142.73
600	146.17
625	149.50

Table 2

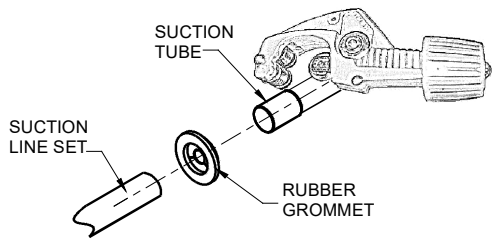

Figure 7A

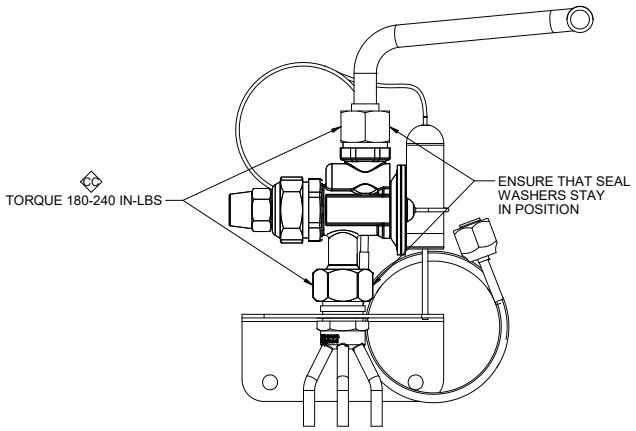

Figure 7B

CAUTION

Excessive torque can cause the TXV retaining ring to weaken & create a leak. This will make it difficult to re-install. The proper torque settings should be configured as below when adjusting. Oiled equalizer should be set to 10-12 ft/lbs. Outlet and inlet chat fitting should be set to 15-20 ft/lbs.

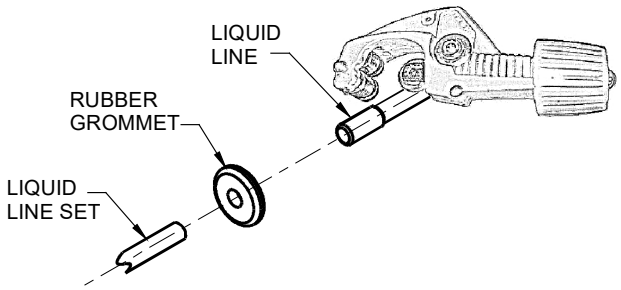

Figure 7C

5. Insert liquid line set into liquid tube expansion and slide grommet about 18” away from braze joint.
6. Insert suction line set into suction tube expansion and slide insulation and grommet about 18” away from braze joint.
7. Braze suction and liquid line joints.

11.7 Thermal Expansion Valve System Adjustment

The following information for the indoor unit should be verified before attempting to charge system or adjust TXV if necessary.

1. Total static pressure is .5” WC or less.
2. Airflow is correct for installed unit.
3. Airflow tables are in the installation manual and Spec Sheet for Indoor Unit.
4. Complete airflow tables and charging information are in Service Manual.
5. The outdoor temperature must be 60°F or higher.
6. Set the room thermostat to COOL, fan switch to AUTO
7. Set the temperature control well below room temperature.

Superheat adjustments should not be made until indoor ambient conditions have stabilized. This could take up to **24 hours** depending on indoor temperature and humidity. Before checking superheat run the unit in cooling for 10 minutes or until refrigerant pressures stabilize. Use the following guidelines and methods to check unit operation and ensure that the refrigerant charge is within limits. **NOTE:** Charge two stage units on low stage.

In addition to conventional charging procedures, the following requirements shall be followed:

1. Ensure that contamination of different refrigerants does not occur when using charging equipment. Hoses or lines shall be as short as possible to minimize the amount of refrigerant contained in them.
2. A2L refrigerant cylinders shall be kept in an appropriate position according to the instructions.
3. Ensure that the refrigeration system is grounded prior to charging the system with refrigerant.
4. Label the system when charging is complete (if not already).
5. Extreme care shall be taken not to overfill the refrigerating system.

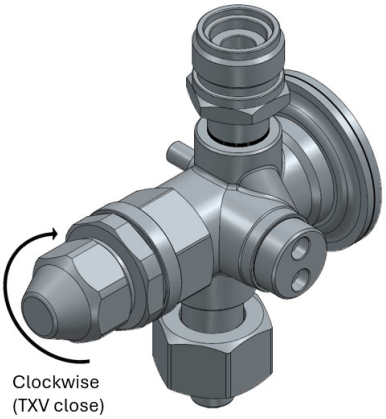

Figure 7D

For adjustment, please refer to Figure 7D. Carefully remove the nut without damaging the TXV. Rotate the TXV clockwise to close it, ensuring the TXV is oriented as shown in Figure 7D. If it is not, adjust the orientation accordingly. Each adjustment should involve a rotation of 1/8 turn: clockwise to close the TXV (as per Figure 7D) and counterclockwise to open it. The total combined adjustment must not exceed 1.5 turns in either direction from the default set point.
Prior to recharging the system, it shall be pressure-tested with the appropriate purging gas. The system shall be leak-tested on completion of charging but prior to commissioning. A follow up leak test shall be carried out prior to leaving the site.

1. Purge gauge lines. Connect service gauge manifold to base-valve service ports.
2. Temporarily install a thermometer on the liquid line at the liquid line service valve and 4-6” from the compressor on the suction line. Ensure the thermometer makes adequate contact and is insulated for best possible readings. Use liquid line temperature to determine subcooling and vapor temperature to determine superheat.
3. If subcooling and superheat are low, adjust TXV superheat, then check subcooling as specified in Outdoor Installation and Instruction manual.
   a. If subcooling is low and superheat is high, add charge to raise subcooling 8°F +/- 1°F then, check superheat.
   b. If subcooling and superheat are high, adjust TXV superheat, then check subcooling as specified in Outdoor Installation and Instruction manual.
4. After adjustments are complete reinstall cap on adjustment stem and tighten 1/6 turn.
5. Remove gauges and check the Schrader ports for leaks and tighten valve cores if necessary. Install caps finger tight.

For optimum system performance subcool and superheat should be matched as specified in Outdoor Installation and Instruction manual. Outdoor should be matched with approved AHRI combination, other approved system shall have subcooling set to 8°F ± 1°F and superheat set to 12°F ± 1°F.

NOTE: The minimum time between TXV adjustments shall be 20 minutes.

NOTE: In situations where the TXV must be removed and replaced or re-installed into the system, the TXV should be hand tightened first and then apply a half turn to fully set the TXV. No more than 20 ft-lb torque should be applied to the joints of the TXV.

NOTE: Do NOT adjust the charge based on suction pressure unless there is a gross undercharge.

SUBCOOL FORMULA = SAT. LIQUID LINE TEMP. - LIQUID LINE TEMP.

SUPERHEAT FORMULA = SUCT. LINE TEMP. - SAT. SUCT. TEMP.

11.8 Piston Charge Instructions

If the unit is not equipped with a TXV metering device follow the steps below:

1. Ensure the piston size present on the unit is rated for use with the outdoor matchup as shown on the piston kit chart. If it does not match, replace the provided piston with the piston size listed on the piston kit chart.
2. For optimum system performance, superheat should be matched as specified in outdoor installation manual with respective AHRI outdoor matchup.

11.9 Leak Detection

Under no circumstances shall potential sources of ignition be used in the searching for or detection of refrigerant leaks. A halide torch (or any other detector using a naked flame) shall not be used. If a leak is suspected, all naked flames shall be removed/extinguished. If a leakage of refrigerant is found which requires brazing, all of the refrigerant shall be recovered from the system, or isolated (by means of shut off valves) in a part of the system remote from the leak.

The following leak detection methods have been deemed acceptable, provided proper care is taken in their implementation:

1. Electronic leak detectors rated for use with R-32 refrigerant. Ensure the detection equipment is calibrated in a refrigerant-free area and that the leak detector itself is not a potential source of ignition. Leak detection equipment shall be set at a value of no more than 0.075 kg/m³.
2. Leak detection fluids - such as the bubble method or fluorescent method. Ensure that the use of detergents containing chlorine are avoided as the chlorine may react with the refrigerant and corrode the pipe-work.

11.10 Serial Plate

The installer must write the maximum possible refrigerant charge and the minimum room area on serial plate. Use Table 3 to determine the maximum possible refrigerant charge and minimum (air conditioned) room area based on the total system refrigerant charge. If the installation is not at sea level, refer table 4 to determine how to adjust the minimum (air conditioned) room area. Use a durable marking instrument to write the values on the serial plate.
The installers are responsible for verifying that mitigation procedures are operational with the minimum required mitigation airflow (Refer to table 3 for airflow data).

Total System Refrigerant Charge (oz)	Maximum Possible Refrigerant Charge (oz)	Maximum Possible Refrigerant Charge (kg)	Minimum Air Conditioned Room Area (ft2)	Minimum Air Conditioned Room Area (m2)	Minimum Required Mitigation Airflow (CFM)	Minimum Required Mitigation Airflow (m3/hr)
31~50	50	1.42	46	4.22	83	140
51~100	100	2.84	91	8.44	165	279
101~150	150	4.26	137	12.66	247	418
151~200	200	5.67	182	16.85	328	556
201~250	250	7.09	227	21.07	410	696
251~300	300	8.51	273	25.29	492	835
301~350	350	9.93	318	29.51	574	974
351~400	400	11.34	363	33.69	655	1112
401~450	450	12.76	409	37.91	737	1251
451~500	500	14.18	454	42.13	819	1391
501~550	550	15.60	499	46.35	901	1530
551~600	600	17.01	545	50.54	982	1668

Table 3

NOTE: It is the installer's responsibility to verify that actuation of mitigation procedures are operational with minimum required airflow according to the chart.

12. Altitude adjustment factor to calculate min room area.

The Indoor equipment mitigation requirements, as seen on table 3, are calculated at sea level. For higher altitudes adjust the minimum room area by the corresponding altitude adjustment factor shown in Table 4 is provided as a reference. Adjusted room area (Amin adj) is the product of the minimum air conditioned room area and the adjustment factor AF, as shown in below formula

Amin adj = Amin (Minimum air conditioned room area from Table 3) * AF

Height in meters	Height in feet	Altitude Adjustment factor (AF)
At sea level	At sea level	1.00
1~200	1~660	1.02
200~400	660~1320	1.03
400~600	1320~1970	1.05
600~800	1970~2630	1.07
800~1000	2630~3290	1.09
1000~1200	3290~3940	1.11
1200~1400	3940~4600	1.13
1400~1600	4600~5250	1.15
1600~1800	5250~5910	1.17
1800~2000	5910~6570	1.19
2000~2200	6570~7220	1.21
2200~2400	7220~7880	1.24
2400~2600	7880~8540	1.26
2600~2800	8540~9190	1.29
2800~3000	9190~9850	1.31
3000~3200	9850~10500	1.34

Table 4 - A_min altitude correction factor.

NOTE: The altitude adjustment factor (AF) for any altitudes below sea level will be 1.00.

13. Supply Duct Connection

Top flanges can be bent for ease in installation to the duct flanges. (See Figure 9)

WARNING

ALL REQUIRED VENTILATION OPENINGS MUST BE CLEAR OF OBSTRUCTION AND ALL DUCTS CONNECTED TO THE APPLIANCE FREE OF POTENTIAL IGNITION SOURCES.

The air extraction opening from the room shall be located equal or below the refrigerant release point. For floor mounted units, it shall be as low as practicable. The air extraction openings shall be located in a sufficient distance from the air intake openings to prevent re-circulation to the space.

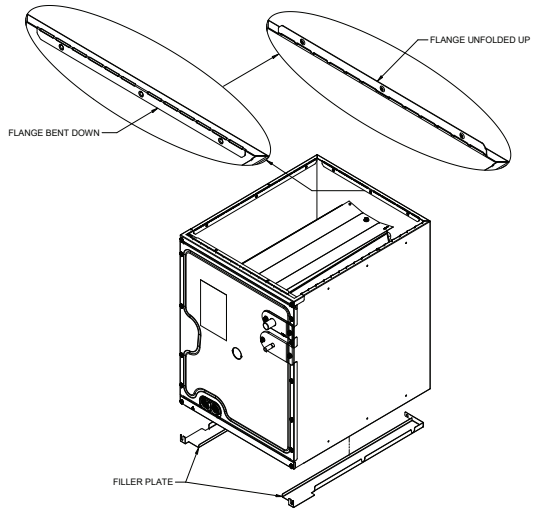

Figure 8

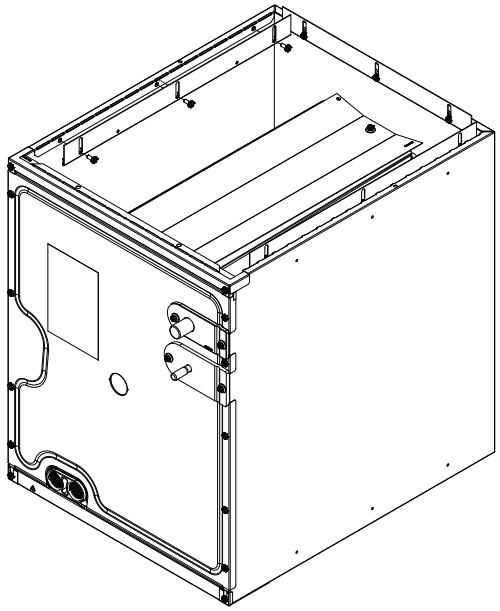

Figure 9

14. Furnace to Coil Attachment

Refer to the Furnace IO manual for further instruction. Attach the duct flanges to the discharge side of the unit. If the coil and furnace combination are not similar in depth and width, use a field-supplied transition to center the furnace and coil openings.

1. Using the hardware and brackets provided, attach the coil to the furnace then attach the plenum to the coil. Using tape or mastic seal between the coil and furnace and the coil and plenum.

A coil installed with a furnace may be the same width as the furnace or may be one size larger than the furnace but cannot be smaller than the furnace. EXAMPLE: A "C" width coil may be installed with a "B" or a "C" width furnace.

For all upflow/downflow applications, the front of the coil and furnace must face the same direction.

15. Filler Plates

Filler plates can be used on B, C, and D width coils for adapting them to a furnace one size smaller. If the coil and furnace are the same width, filler plates are not required. Refer to the instructions in the filler plate kit (FPKT01) on how to install (see Figure 8).

A duct flange kit can also be purchased from your distributor. (See Figure 9)

- 14 inch chassis - CLDUCTFLGA
- 17.5 inch chassis - CLDUCTFLGB
- 21 inch chassis - CLDUCTFLGC
- 24.5 inch chassis - CLDUCTFLGD

16. Return Ductwork

DO NOT TERMINATE THE RETURN DUCTWORK IN AN AREA THAT CAN INTRODUCE TOXIC OR OBJECTIONABLE FUMES/ODORS INTO THE DUCTWORK.

17. Sealing Along The Panel Gap

IMPORTANT NOTE: To prevent cabinet sweating and airflow leak, apply field provided insulation tape along all joining surfaces between the coil, gas furnace, duct work and panels. See Figure 11.

18. Removing Coil from Cabinet

In an event of removing taller coils from cabinet to service or replace; remove access panel, remove top tie rail to allow the coils to slide out of the cabinet.

After service or replacement slide the coil back in the cabinet and secure the top tie rail and re-install access panel.
See Figure 10.

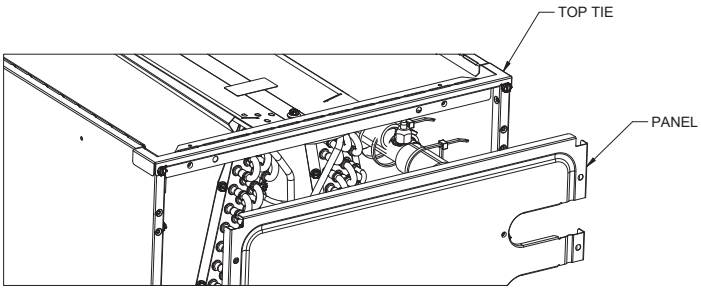

Figure 10

19. UV Accessory (optional)

The listed Clean Comfort brand UV coil purifiers models are the only models approved to be used with this unit. They can be purchased from the distributors. The use of the accessory control kit is optional for the installation of this models. Maximum UV lamp diameter to be used per delta plate knockout design is 1.375” to reduce the possibility of air leak.

The power source must be installed external of the unit. Ensure that the wiring is routed through the access panel knockout with the grommet included. The magnetic door switch must be installed to avoid any accidental Ultraviolet exposure during service.

Refer to UV coil purifiers product specification and installation manual for additional details.

Approved UV-C Model Numbers	
Models	**Lamp**
UC18S15-24	UCP-16013
UC18S15-24B	UCP-16012

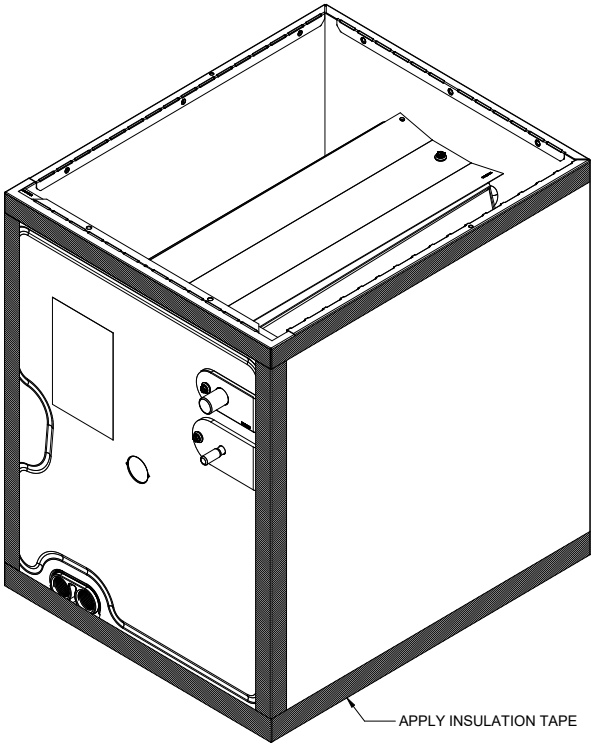

Figure 11

20. Aluminum Indoor Coil Cleaning (Qualified Servicer Only)

R-32 sensor must be removed from the unit before applying coil cleaners to avoid damage and contamination. Reassemble the R-32 sensor back to the unit after done with coil cleaning process. This unit is equipped with an aluminum tube evaporator coil. The safest way to clean the evaporator coil is to simply flush the coil with water. This cleaning practice remains as the recommended cleaning method for both copper tube and aluminum tube residential evaporator coils.

It has been determined that many coil cleaners and drain pan tablets contain corrosive chemicals that can be harmful to aluminum tube and fin evaporator coils. Even a one-time application of these corrosive chemicals can cause premature aluminum evaporator coil failure. Any cleaners that contain corrosive chemicals including, but not limited to, chlorine and hydroxides, should not be used.

An alternate cleaning method is to use one of the products listed in TP-109* to clean the coils. The cleaners listed are the only agents deemed safe and approved for use to clean round tube aluminum coils. TP-109 is also available on the web site in Partner Link > Service Toolkit.

NOTE: Ensure coils are rinsed well after use of any chemical cleaners.

WARNING

Do not use means to accelerate the defrosting process or to clean, other than those recommended by the manufacturer. The appliance shall be stored in a room without continuously operating ignition sources (for example: open flames, an operating gas appliance or an operating electric heater). Do not pierce or burn. Be aware that refrigerants may not contain an odor.

21. Start-Up Procedure

WARNING

HIGH VOLTAGE
Disconnect all power before servicing or installing this unit. Multiple power sources may be present. Failure to do so may cause property damage, personal injury or death.

- Prior to start-up, ensure that all electrical wires are properly sized and all connections are properly tightened.
- All panels must be in place and secured. For air tight application, gasket must be positioned at prescribed locations to achieve 1.4% leakage.
- Tubing must be leak free.
- Condensate line must be trapped and pitched to allow for drainage.
- Low voltage wiring is properly connected.

- Auxiliary drain is installed when necessary and pitched to allow for drainage.
- Unit is protected from vehicular or other physical damage.
- Return air is not obtained from, nor are there any return air duct joints that are unsealed in, areas where there may be objectionable odors, flammable vapors or products of combustion such as carbon monoxide (CO), which may cause serious personal injury or death.
- Ensure that the equipped R-32 sensor is wired to the furnace PCB and that there are no sources of potential ignition within the system.

IMPORTANT: The A2L verification step as described on the furnace Installation Instructions or the Non-A2L Furnace Integration Kit Installation Instructions must be completed.

22. Refrigerant Recovery

When removing refrigerant from a system, either for servicing or decommissioning, all refrigerants must be removed safely. When transferring refrigerant into cylinders, ensure that only appropriate refrigerant recovery cylinders are employed. Ensure that the correct number of cylinders for holding the total system charge are available. All cylinders to be used are designated for the recovered refrigerant and labeled for that refrigerant (i.e. special cylinders for the recovery of refrigerant). Cylinders shall be complete with pressure-relief valve and associated shut-off valves in good working order. Empty recovery cylinders are evacuated and, if possible, cooled before recovery occurs.

All recovery equipment must be suitable for the recovery of A2L refrigerant and in good working order. Ensure that you follow the manufacturer's instructions carefully. If in doubt, the manufacturer should be consulted. In addition, a set of calibrated weighing scales shall be available and in good working order. Hoses shall be complete with leak-free disconnect couplings and in good condition. The recovered refrigerant shall be processed according to local legislation in the correct recovery cylinder, and the relevant waste transfer note arranged. Do not mix refrigerants in recovery units and especially not in cylinders.

If compressors or compressor oils are to be removed, ensure that they have been evacuated to an acceptable level to make certain that flammable refrigerant does not remain within the lubricant. The compressor body shall not be heated by an open flame or other ignition sources to accelerate this process. When oil is drained from a system, it shall be carried out safely.

23. Before you call your Servicer

- Check the thermostat to confirm that it is properly set.
- Wait 15 minutes. Some devices in the outdoor unit or in programmable thermostats will prevent compressor operation for awhile, and then reset automatically. Also, some power companies will install devices which shut off air conditioners for several minutes on hot days. If you wait several minutes, the unit may begin operation on its own.
- Check the electrical panel for tripped circuit breakers or open fuses. Reset the circuit breakers or replace fuses as necessary.
- Check the disconnect switch near the indoor furnace or blower to confirm that it is closed.
- Check for obstructions on the outdoor unit. Confirm that it has not been covered on the sides or the top. Remove any obstructions that can be safely removed. If the unit is covered with dirt or debris, call a qualified servicer to clean it.
- Check for blockage of the indoor air inlets and outlets. Confirm that they are open and have not been blocked by objects (rugs, curtains or furniture).
- Check the filter. If it is dirty, clean or replace it.
- Listen for any unusual noise(s), other than normal operating noise, that might be coming from the outdoor unit. If you hear unusual noise(s) coming from the unit, call a qualified servicer.

	service indicator; read technical manual
	operator's manual; operating insturcionts
	warning; low burning velocity material
	UN GHS flame symbol

Marking Symbol Table

24. Start-Up Checklist

Air Handler / Coil				
	Model Number	_____		
	Serial Number	_____		
ELECTRICAL				
Line Voltage (Measure L1 and L2 Voltage)	L1 - L2	_____		
Secondary Voltage (Measure Transformer Output Voltage)	R - C	_____		
Blower Amps		_____		
Heat Strip 1 - Amps		_____		
Heat Strip 2 - Amps		_____		
BLOWER EXTERNAL STATIC PRESSURE				
Return Air Static Pressure		_____	IN. W.C.	
Supply Air Static Pressure		_____	IN. W.C.	
Total External Static Pressure (Ignoring +/- from the reading above, add total here)		_____	IN. W.C.	
TEMPERATURES				
Return Air Temperature (Dry bulb / Wet bulb)		_____	DB °F	_____ WB °F
Cooling Supply Air Temperature (Dry bulb / Wet bulb)		_____	DB °F	_____ WB °F
Heating Supply Air Temperature		_____	DB °F	
Temperature Rise		_____	DB °F	
Delta T (Difference between Supply and Return Temperatures)		_____	DB °F	

Air Handler / Coil - (Inverter Matched)	
INVERTER AH / COIL ONLY	
Check EEV and EEV wiring is secure (no adjustment required)	_____

Additional Checks	
Check wire routings for any rubbing	_____
Check product for proper draining	_____
Check screw tightness on blower wheel	_____
Check factory wiring and wire connections	_____
Check product for proper clearances as noted by installation instructions	_____

°F to °C formula: (°F - 32) divided by 1.8 = °C **°C to °F formula: (°C multiplied by 1.8) + 32 = °F**

CUSTOMER FEEDBACK
We are very interested in all product comments.
Please fill out the feedback form on one of the following links:
Daikin Products: (https://daikincomfort.com/contact-us)
Goodman® Brand Products: (http://www.goodmanmfg.com/about/contact-us).
Amana® Brand Products: (http://www.amana-hac.com/about-us/contact-us).
You can also scan the QR code on the right for the product brand you purchased to be directed to the feedback page.

DAIKIN

GOODMAN® BRAND

AMANA® BRAND

NOTE: SPECIFICATIONS AND PERFORMANCE DATA LISTED HEREIN ARE SUBJECT TO CHANGE WITHOUT NOTICE

PFAS

19001 Kermier Rd., Waller, TX 77484
© 2026 Daikin Comfort Technologies Manufacturing, Inc.
www.daikincomfort.com • www.goodmanmfg.com • www.amana-hac.com

AMANA® HEATING & AIR CONDITIONING ® / TM 2026 Amana. Manufactured under license by Daikin. Limited warranty provided by the manufacturer. All trademarks are the property of their respective owners.