Goodman
Air Conditioning & Heating

GLXS5B

High-Efficiency
R-32 Split System Air Conditioner
Up to 16.5 SEER2
1½ To 5 Tons

R32

Contents

Nomenclature..... 2
Product Specifications..... 3
Expanded Cooling Data 4
Performance Data 18
Dimensions 19
Wiring Diagrams 20
Accessories 22

Standard Features

- High-Efficiency Scroll Compressor
- Factory-installed filter drier
- Fully charged for 15' of tubing length
- 5mm diameter copper tube/ enhanced aluminum fin coil
- Factory-installed filter drier
- Sweat connection service valves with easy access to gauge ports
- Enclosed contactor
- High-pressure switch
- Ground lug connection
- Capacitors with extended life
- AHRI Certified
- ETL Listed

Cabinet Features

- Removable grille-style top design compliant with UL 60335-2-40
- Venturi for increased velocity of airflow
- Attractive Architectural Gray powder-paint finish with 500-hour salt-spray approval
- Wire fan discharge grille
- Steel louver coil guard
- Top and side maintenance access
- Single-panel access to controls with space provided for field-installed accessories
- When properly anchored, meets the 2023 Florida Building Code unit integrity requirements for hurricane-type winds (Anchor bracket kits available.

10 YEAR PARTS LIMITED WARRANTY*

Intertek

AHRI CERTIFIED

COMPANY WITH QUALITY SYSTEM CERTIFIED BY DNV GL = ISO 9001 =

COMPANY WITH ENVIRONMENTAL SYSTEM CERTIFIED BY DNV GL = ISO 14001 =

BBB ACCREDITED BUSINESS

* Complete warranty details available from your local dealer or at www.goodmanmfg.com. To receive the 10-Year Parts Limited Warranty, online registration must be completed within 60 days of installation. Online registration is not required in California or Québec. The duration of warranty coverage in Texas and Florida differs in some cases.

G	L	X	S	5	B	A	36	1	0	A	A
1	2	3	4	5	6	7	8,9	10	11	12	13

BRAND

G - Goodman® Brand

TYPE

L R-32 Splits System

OUTDOOR TYPE

X Condenser

Z Heat Pump

COMPRESSOR TYPE

S Single-Stage
T Two-Stage

EFFICIENCY (SEER2) NOMINAL

13.4 - 13.7 = 3
13.8 - 14.5 = 4
14.6 - 15.9 = 5
16.0-16.9 = 6
17.0-17.9 = 7
18.0-18.9 = 8
19.0+ = 9

MINOR REV

A

MAJOR REVISION

A

Variation

Electrical

1 208/230 V, 1 Phase, 60 Hz

NOMINAL CAPACITY

18 - 1½ Tons
24 - 2 Tons
30 - 2 Tons
36 - 3 Tons
42 - 3½ Tons
48 - 4 Tons
60 - 5 Tons

REGION

N North
S Southeast & North
A All Regions

FEATURE/APPLICATION

B - Standard
M - Multi-Family
C - Communicating (Top Flow)

	GLXS5B A1810A*	GLXS5B A2410A*	GLXS5B A3010A*	GLXS5B A3610A*	GLXS5B A4210A*	GLXS5B A4810A*	GLXS5B A6010A*
CAPACITIES							
Nominal Cooling (BTU/h)	18,000	24,000	30,000	36,000	42,000	48,000	60,000
Decibels (dBA)	73.0	69.0	73.0	71.0	74.0	75.0	76.0
COMPRESSOR							
RLA	8.3	10.2	11.5	13.4	14.4	19.4	27.1
LRA	44.3	59.3	66.3	83.3	112.2	127.7	178
Stage	Single	Single	Single	Single	Single	Single	Two
Type	Scroll	Scroll	Scroll	Scroll	Scroll	Scroll	Scroll
CONDENSER FAN MOTOR							
Motor Type	PSC	PSC	PSC	PSC	PSC	PSC	ECM
Horsepower	1/8	1/6	1/6	1/6	1/4	1/4	1/3
FLA	0.70	0.95	0.95	0.95	1.30	1.30	2.60
REFRIGERATION SYSTEM							
Refrigerant Line Size [1]							
Liquid Line Size (“O.D.)	⅜"	⅜"	⅜"	⅜"	⅜"	⅜"	⅜"
Suction Line Size (“O.D.)	¾"	¾"	¾"	⅞"	1⅛"	1⅛"	1⅛"
Refrigerant Connection Size							
Liquid Valve Size (“O.D.)	⅜"	⅜"	⅜"	⅜"	⅜"	⅜"	⅜"
Suction Valve Size (“O.D.) [2]	¾"	¾"	¾"	⅞"	⅞"	⅞"	⅞"
Valve Type	Sweat	Sweat	Sweat	Sweat	Sweat	Sweat	Sweat
Refrigerant Charge [3]	54	65	87	88	141	138	167
ELECTRICAL DATA							
Voltage-Phase	208/230-1	208/230-1	208/230-1	208/230-1	208/230-1	208/230-1	208/230-1
Minimum Circuit Ampacity [4]	11.1	13.8	15.4	17.8	19.3	25.5	36.4
Max. Overcurrent Protection [5]	15	20	25	30	30	40	60
Min / Max Volts	197/253	197/253	197/253	197/253	197/253	197/253	197/253
Electrical Conduit Size	½" or ¾"	½" or ¾"	½" or ¾"	½" or ¾"	½" or ¾"	½" or ¾"	½" or ¾"
EQUIPMENT WEIGHT (LBS)	116	149	192	191	250	249	287
SHIP WEIGHT (LBS)	134	167	214	213	272	271	309

[1] Line sizes denoted for 25’ line sets, tested and rated in accordance with ARI Standard 210/240. For other line set lengths or sizes, refer to the Installation Instructions and/or the Long Line Set Applications guide.

[2] Any suction line adapter will need to be supplied by the field.

[4] Unit is factory charged with refrigerant for 15’ of ⅜” liquid line. System charge must be adjusted per the Final Charge Adjustment procedure found in the Installation Instructions.

[4] Wire size should be determined in accordance with National Electrical Codes; extensive wire runs will require larger wire sizes

[5] Must use time-delay fuses or HACR-type circuit breakers of the same size as noted.

NOTES

- Always check the S&R plate for electrical data on the unit being installed.

			Outdoor Ambient Temperature																							
			65				75				85				95				105				115			
			Entering Indoor Wet Bulb Temperature																							
IDB	Airflow		59	63	67	71	59	63	67	71	59	63	67	71	59	63	67	71	59	63	67	71	59	63	67	71
70	525	MBh	18.1	18.4	18.9	-	18.0	18.2	18.8	-	17.5	17.8	18.3	-	16.7	17.0	17.5	-	15.7	16.0	16.5	-	14.8	15.1	15.6	-
		S/T	0.62	0.55	0.42	-	0.63	0.56	0.43	-	0.65	0.58	0.45	-	0.67	0.60	0.47	-	0.69	0.62	0.49	-	1.00	0.67	0.54	-
		ΔT	21	19	15	-	21	19	15	-	21	19	15	-	21	19	15	-	20	18	14	-	22	20	16	-
		kW	1.12	1.11	1.11	-	1.24	1.24	1.23	-	1.37	1.37	1.37	-	1.52	1.52	1.52	-	1.68	1.68	1.68	-	1.87	1.87	1.87	-
		Amps	4.0	4.0	4.0	-	4.6	4.6	4.6	-	5.2	5.2	5.2	-	5.9	5.9	5.9	-	6.6	6.6	6.6	-	7.5	7.5	7.5	-
	600	MBh	18.5	18.7	19.3	-	18.3	18.6	19.1	-	17.8	18.1	18.6	-	17.0	17.3	17.8	-	16.1	16.3	16.8	-	15.2	15.4	15.9	-
		S/T	0.66	0.58	0.46	-	0.66	0.59	0.46	-	0.69	0.61	0.49	-	0.70	0.63	0.51	-	0.72	0.65	0.53	-	1.00	0.70	0.57	-
		ΔT	19	17	14	-	19	17	14	-	20	18	14	-	19	17	14	-	19	17	13	-	20	18	15	-
		kW	1.12	1.12	1.12	-	1.24	1.24	1.24	-	1.38	1.38	1.37	-	1.52	1.52	1.52	-	1.69	1.69	1.69	-	1.88	1.88	1.88	-
		Amps	4.1	4.1	4.1	-	4.6	4.6	4.6	-	5.2	5.2	5.2	-	5.9	5.9	5.9	-	6.7	6.7	6.7	-	7.5	7.5	7.5	-
	675	MBh	18.9	19.1	19.7	-	18.7	19.0	19.5	-	18.2	18.5	19.0	-	17.4	17.7	18.2	-	16.5	16.7	17.2	-	15.6	15.8	16.3	-
		S/T	0.66	0.59	0.47	-	0.67	0.60	0.47	-	0.69	0.62	0.49	-	0.71	0.64	0.51	-	1.00	0.66	0.53	-	1.00	0.71	0.58	-
		ΔT	18	16	13	-	18	16	13	-	19	17	13	-	18	16	13	-	18	16	12	-	19	17	14	-
		kW	1.13	1.13	1.12	-	1.25	1.25	1.24	-	1.38	1.38	1.38	-	1.53	1.53	1.53	-	1.69	1.69	1.69	-	1.89	1.88	1.88	-
		Amps	4.1	4.1	4.1	-	4.6	4.6	4.6	-	5.3	5.3	5.3	-	5.9	5.9	5.9	-	6.7	6.7	6.7	-	7.6	7.6	7.6	-
75	525	MBh	18.2	18.4	18.9	19.8	18.0	18.2	18.8	19.6	17.5	17.8	18.3	19.1	16.7	**17.0**	17.5	18.3	15.7	16.0	16.5	17.3	14.8	15.1	15.6	16.4
		S/T	0.74	0.67	0.54	0.4	0.75	0.68	0.55	0.4	0.77	0.70	0.57	0.4	1.00	**0.72**	0.59	0.5	1.00	0.74	0.61	0.5	1.00	0.79	0.66	0.5
		ΔT	25	23	19	15	25	23	19	15	25	23	20	16	25	**23**	19	15	25	23	19	15	26	24	20	16
		kW	1.11	1.11	1.11	1.1	1.24	1.23	1.23	1.2	1.37	1.37	1.37	1.4	1.52	**1.52**	1.51	1.5	1.68	1.68	1.68	1.7	1.87	1.87	1.87	1.9
		Amps	4.0	4.0	4.0	4.1	4.6	4.6	4.6	4.6	5.2	5.2	5.2	5.2	5.9	**5.9**	5.9	5.9	6.6	6.6	6.6	6.7	7.5	7.5	7.5	7.5
	600	MBh	18.5	18.7	19.3	20.1	18.3	18.6	19.1	19.9	17.9	18.1	18.6	19.5	17.0	17.3	17.8	18.7	16.1	16.3	16.9	17.7	15.2	15.4	16.0	16.8
		S/T	0.78	0.71	0.58	0.4	0.78	0.71	0.58	0.5	0.81	0.73	0.61	0.5	1.00	0.75	0.63	0.5	1.00	0.77	0.65	0.5	1.00	0.82	0.69	0.6
		ΔT	24	22	18	14	24	22	18	14	24	22	18	14	24	22	18	14	24	22	18	14	25	23	19	15
		kW	1.12	1.12	1.12	1.13	1.24	1.24	1.24	1.25	1.38	1.38	1.37	1.38	1.52	1.52	1.52	1.53	1.69	1.69	1.68	1.69	1.88	1.88	1.88	1.89
		Amps	4.1	4.1	4.1	4.1	4.6	4.6	4.6	4.6	5.2	5.2	5.2	5.3	5.9	5.9	5.9	5.9	6.7	6.7	6.6	6.7	7.5	7.5	7.5	7.6
	675	MBh	18.9	19.1	19.7	20.5	18.7	19.0	19.5	20.3	18.3	18.5	19.0	19.9	17.4	17.7	18.2	19.1	16.5	16.7	17.3	18.1	15.6	15.8	16.4	17.2
		S/T	0.78	0.71	0.59	0.5	0.79	0.72	0.59	0.5	0.81	0.74	0.62	0.5	1.00	0.76	0.63	0.5	1.00	0.78	0.65	0.5	1.00	0.83	0.70	0.6
		ΔT	23	21	17	13	23	21	17	13	23	21	17	13	23	21	17	13	23	21	17	13	24	22	18	14
		kW	1.13	1.12	1.12	1.1	1.25	1.25	1.24	1.3	1.38	1.38	1.38	1.4	1.53	1.53	1.53	1.5	1.69	1.69	1.69	1.7	1.88	1.88	1.88	1.9
		Amps	4.1	4.1	4.1	4.1	4.6	4.6	4.6	4.7	5.3	5.3	5.3	5.3	5.9	5.9	5.9	6.0	6.7	6.7	6.7	6.7	7.6	7.6	7.6	7.6

IDB: Entering Indoor Dry Bulb Temperature

Shaded area reflects ACCA (TVA) conditions

kW = Total system power

High and low pressures are measured at the liquid and suction service valves.

Amps = outdoor unit amps (comp.+fan)

Expanded Cooling Data — GLXS5BA1810A+CAPTA2422*3A* (cont.)*

			Outdoor Ambient Temperature																							
			65				75				85				95				105				115			
			Entering Indoor Wet Bulb Temperature																							
IDB	Airflow		59	63	67	71	59	63	67	71	59	63	67	71	59	63	67	71	59	63	67	71	59	63	67	71
80	525	MBh	18.2	18.5	19.0	19.8	18.1	18.3	18.9	19.7	17.6	17.9	18.4	19.2	16.8	17.1	**17.6**	18.4	15.8	16.1	16.6	17.4	14.9	15.2	15.7	16.5
		S/T	0.86	0.79	0.66	0.5	1.00	0.79	0.67	0.5	1.00	0.82	0.69	0.6	1.00	0.84	**0.71**	0.6	1.00	0.86	0.73	0.6	1.00	1.00	0.78	0.6
		ΔT	30	28	24	20	29	27	24	20	30	28	24	20	29	27	**24**	20	29	27	23	19	30	28	25	21
		kW	1.11	1.11	1.11	1.1	1.24	1.24	1.23	1.2	1.37	1.37	1.37	1.4	1.52	1.52	**1.52**	1.5	1.68	1.68	1.68	1.7	1.87	1.87	1.87	1.9
		Amps	4.0	4.0	4.0	4.1	4.6	4.6	4.6	4.6	5.2	5.2	5.2	5.2	5.9	5.9	**5.9**	5.9	6.6	6.6	6.6	6.7	7.5	7.5	7.5	7.5
	600	MBh	18.6	18.8	19.4	20.2	18.4	18.7	19.2	20.0	17.9	18.2	18.7	19.5	17.1	17.4	17.9	18.7	16.2	16.4	16.9	17.8	15.3	15.5	16.0	16.9
		S/T	0.89	0.82	0.70	0.6	1.00	0.83	0.70	0.6	1.00	0.85	0.72	0.6	1.00	0.87	0.74	0.6	1.00	0.89	0.76	0.6	1.00	1.00	0.81	0.7
		ΔT	28	26	23	19	28	26	23	19	29	27	23	19	28	26	23	19	28	26	22	18	29	27	24	20
		kW	1.12	1.12	1.12	1.13	1.24	1.24	1.24	1.25	1.38	1.38	1.37	1.38	1.52	1.52	1.52	1.53	1.69	1.69	1.68	1.69	1.88	1.88	1.88	1.89
		Amps	4.1	4.1	4.1	4.1	4.6	4.6	4.6	4.7	5.2	5.2	5.2	5.3	5.9	5.9	5.9	5.9	6.7	6.7	6.7	6.7	7.5	7.5	7.5	7.6
	675	MBh	19.0	19.2	19.8	20.6	18.8	19.1	19.6	20.4	18.3	18.6	19.1	20.0	17.5	17.8	18.3	19.1	16.6	16.8	17.3	18.2	15.7	15.9	16.4	17.3
		S/T	0.90	0.83	0.70	0.6	1.00	0.84	0.71	0.6	1.00	0.86	0.73	0.6	1.00	0.88	0.75	0.6	1.00	0.90	0.77	0.6	1.00	1.00	0.82	0.7
		ΔT	27	25	22	18	27	25	22	18	28	26	22	18	27	25	21	18	27	25	21	17	28	26	22	19
		kW	1.13	1.13	1.12	1.1	1.25	1.25	1.24	1.3	1.38	1.38	1.38	1.4	1.53	1.53	1.53	1.5	1.69	1.69	1.69	1.7	1.89	1.88	1.88	1.9
		Amps	4.1	4.1	4.1	4.1	4.6	4.6	4.6	4.7	5.3	5.3	5.3	5.3	5.9	5.9	5.9	6.0	6.7	6.7	6.7	6.7	7.6	7.6	7.6	7.6
85	525	MBh	18.5	18.8	19.3	20.2	18.4	18.6	19.2	20.0	17.9	18.2	18.7	19.5	17.1	**17.4**	17.9	18.7	16.1	16.4	16.9	17.7	15.2	15.5	16.0	16.8
		S/T	1.00	0.88	0.76	0.6	1.00	0.89	0.76	0.6	1.00	0.91	0.79	0.7	1.00	**1.00**	0.80	0.7	1.00	1.00	0.82	0.7	1.00	1.00	0.87	0.7
		ΔT	34	31	28	24	33	31	28	24	34	32	28	24	33	**31**	28	24	33	31	27	23	34	32	29	25
		kW	1.12	1.12	1.11	1.1	1.24	1.24	1.24	1.2	1.37	1.37	1.37	1.4	1.52	**1.52**	1.52	1.5	1.68	1.68	1.68	1.7	1.88	1.88	1.87	1.9
		Amps	4.1	4.0	4.0	4.1	4.6	4.6	4.6	4.6	5.2	5.2	5.2	5.3	5.9	**5.9**	5.9	5.9	6.6	6.6	6.6	6.7	7.5	7.5	7.5	7.6
	600	MBh	18.9	19.1	19.7	20.5	18.7	19.0	19.5	20.3	18.2	18.5	19.0	19.9	17.4	17.7	18.2	19.0	16.5	16.7	17.2	18.1	15.6	15.8	16.3	17.2
		S/T	1.00	0.92	0.79	0.7	1.00	0.92	0.80	0.7	1.00	0.95	0.82	0.7	1.00	1.00	0.84	0.7	1.00	1.00	0.86	0.7	1.00	1.00	0.91	0.8
		ΔT	32	30	27	23	32	30	26	23	33	31	27	23	32	30	26	23	32	30	26	22	33	31	27	24
		kW	1.12	1.12	1.12	1.13	1.24	1.24	1.24	1.25	1.38	1.38	1.38	1.39	1.53	1.53	1.52	1.53	1.69	1.69	1.69	1.70	1.88	1.88	1.88	1.89
		Amps	4.1	4.1	4.1	4.1	4.6	4.6	4.6	4.7	5.3	5.3	5.2	5.3	5.9	5.9	5.9	6.0	6.7	6.7	6.7	6.7	7.6	7.6	7.5	7.6
	675	MBh	19.3	19.5	20.1	20.9	19.1	19.4	19.9	20.7	18.6	18.9	19.4	20.3	17.8	**18.1**	18.6	19.4	16.9	17.1	17.6	18.5	16.0	16.2	16.8	17.6
		S/T	1.00	0.92	0.80	0.7	1.00	0.93	0.80	0.7	1.00	1.00	0.83	0.7	1.00	**1.00**	0.84	0.7	1.00	1.00	0.87	0.7	1.00	1.00	0.91	0.8
		ΔT	31	29	26	22	31	29	25	22	32	30	26	22	31	**29**	25	22	31	29	25	21	32	30	26	23
		kW	1.13	1.13	1.13	1.1	1.25	1.25	1.25	1.3	1.39	1.38	1.38	1.4	1.53	**1.53**	1.53	1.5	1.70	1.69	1.69	1.7	1.89	1.89	1.88	1.9
		Amps	4.1	4.1	4.1	4.1	4.7	4.7	4.6	4.7	5.3	5.3	5.3	5.3	5.9	**5.9**	5.9	6.0	6.7	6.7	6.7	6.7	7.6	7.6	7.6	7.6

IDB: Entering Indoor Dry Bulb Temperature

Shaded area reflects AHRI conditions

kW = Total system power

High and low pressures are measured at the liquid and suction service valves.

Amps = outdoor unit amps (comp.+fan)

			Outdoor Ambient Temperature																							
			65				75				85				95				105				115			
			Entering Indoor Wet Bulb Temperature																							
IDB	Airflow		59	63	67	71	59	63	67	71	59	63	67	71	59	63	67	71	59	63	67	71	59	63	67	71
70	700	MBh	24.3	24.7	25.4	-	24.1	24.4	25.2	-	23.5	23.8	24.5	-	22.4	22.7	23.5	-	21.1	21.4	22.1	-	19.9	20.2	20.9	-
		S/T	0.63	0.56	0.43	-	0.63	0.56	0.43	-	0.66	0.59	0.46	-	1.00	0.60	0.48	-	1.00	0.62	0.50	-	1.00	0.67	0.55	-
		ΔT	21	19	15	-	21	19	15	-	21	19	15	-	21	19	15	-	20	18	15	-	22	20	16	-
		kW	1.49	1.49	1.48	-	1.65	1.65	1.65	-	1.84	1.84	1.83	-	2.04	2.03	2.03	-	2.26	2.26	2.25	-	2.52	2.52	2.52	-
		Amps	5.4	5.4	5.4	-	6.2	6.1	6.1	-	7.0	7.0	7.0	-	7.9	7.9	7.9	-	8.9	8.9	8.9	-	10.1	10.1	10.1	-
	800	MBh	24.8	25.1	25.8	-	24.5	24.9	25.6	-	23.9	24.3	25.0	-	22.8	23.2	23.9	-	21.5	21.9	22.6	-	20.3	20.7	21.4	-
		S/T	0.66	0.59	0.46	-	0.67	0.60	0.47	-	0.69	0.62	0.49	-	1.00	0.64	0.51	-	1.00	0.66	0.53	-	1.00	0.71	0.58	-
		ΔT	20	17	14	-	19	17	14	-	20	18	14	-	19	17	14	-	19	17	13	-	20	18	15	-
		kW	1.50	1.49	1.49	-	1.66	1.66	1.66	-	1.85	1.84	1.84	-	2.04	2.04	2.04	-	2.27	2.27	2.26	-	2.53	2.53	2.52	-
		Amps	5.4	5.4	5.4	-	6.2	6.2	6.2	-	7.0	7.0	7.0	-	7.9	7.9	7.9	-	9.0	9.0	8.9	-	10.2	10.2	10.1	-
	900	MBh	25.3	25.6	26.4	-	25.1	25.4	26.1	-	24.5	24.8	25.5	-	23.4	23.7	24.4	-	22.1	22.4	23.1	-	20.9	21.2	21.9	-
		S/T	0.67	0.60	0.47	-	0.68	0.60	0.48	-	1.00	0.63	0.50	-	1.00	0.65	0.52	-	1.00	0.67	0.54	-	1.00	1.00	0.59	-
		ΔT	18	16	13	-	18	16	13	-	19	17	13	-	18	16	13	-	18	16	12	-	19	17	14	-
		kW	1.50	1.50	1.50	-	1.67	1.67	1.66	-	1.85	1.85	1.85	-	2.05	2.05	2.05	-	2.27	2.27	2.27	-	2.54	2.53	2.53	-
		Amps	5.5	5.5	5.4	-	6.2	6.2	6.2	-	7.1	7.1	7.0	-	8.0	8.0	8.0	-	9.0	9.0	9.0	-	10.2	10.2	10.2	-
75	700	MBh	24.3	24.7	25.4	26.5	24.1	24.5	25.2	26.3	23.5	23.8	24.6	25.6	22.4	**22.8**	23.5	24.6	21.1	21.4	22.2	23.3	19.9	20.2	21.0	22.0
		S/T	0.75	0.68	0.55	0.4	0.76	0.68	0.56	0.4	1.00	0.71	0.58	0.4	1.00	**0.73**	0.60	0.5	1.00	0.75	0.62	0.5	1.00	1.00	0.67	0.5
		ΔT	25	23	19	15	25	23	19	15	25	23	20	16	25	**23**	19	15	25	23	19	15	26	24	20	16
		kW	1.49	1.49	1.48	1.5	1.65	1.65	1.65	1.7	1.84	1.83	1.83	1.8	2.04	**2.03**	2.03	2.0	2.26	2.26	2.25	2.3	2.52	2.52	2.51	2.5
		Amps	5.4	5.4	5.4	5.4	6.1	6.1	6.1	6.2	7.0	7.0	7.0	7.0	7.9	**7.9**	7.9	7.9	8.9	8.9	8.9	9.0	10.1	10.1	10.1	10.2
	800	MBh	24.8	25.1	25.8	26.9	24.6	24.9	25.6	26.7	23.9	24.3	25.0	26.1	22.9	23.2	23.9	25.0	21.5	21.9	22.6	23.7	20.3	20.7	21.4	22.5
		S/T	0.78	0.71	0.58	0.4	1.00	0.72	0.59	0.5	1.00	0.74	0.61	0.5	1.00	0.76	0.63	0.5	1.00	0.78	0.65	0.5	1.00	1.00	0.70	0.6
		ΔT	24	22	18	14	24	22	18	14	24	22	18	14	24	22	18	14	24	22	18	14	25	23	19	15
		kW	1.50	1.49	1.49	1.50	1.66	1.66	1.66	1.67	1.84	1.84	1.84	1.85	2.04	2.04	2.04	2.05	2.27	2.26	2.26	2.27	2.53	2.53	2.52	2.54
		Amps	5.4	5.4	5.4	5.5	6.2	6.2	6.2	6.2	7.0	7.0	7.0	7.1	7.9	7.9	7.9	8.0	9.0	9.0	8.9	9.0	10.2	10.1	10.1	10.2
	900	MBh	25.3	25.7	26.4	27.5	25.1	25.4	26.2	27.3	24.5	24.8	25.5	26.6	23.4	**23.7**	24.5	25.6	22.1	22.4	23.1	24.2	20.9	21.2	21.9	23.0
		S/T	0.79	0.72	0.59	0.5	1.00	0.73	0.60	0.5	1.00	0.75	0.62	0.5	1.00	**0.77**	0.64	0.5	1.00	1.00	0.66	0.5	1.00	1.00	0.71	0.6
		ΔT	23	21	17	13	23	21	17	13	23	21	17	13	23	**21**	17	13	23	21	17	13	24	22	18	14
		kW	1.50	1.50	1.50	1.5	1.67	1.67	1.66	1.7	1.85	1.85	1.85	1.9	2.05	**2.05**	2.05	2.1	2.27	2.27	2.27	2.3	2.53	2.53	2.53	2.5
		Amps	5.5	5.5	5.4	5.5	6.2	6.2	6.2	6.3	7.1	7.1	7.0	7.1	8.0	**8.0**	8.0	8.0	9.0	9.0	9.0	9.0	10.2	10.2	10.2	10.2

IDB: Entering Indoor Dry Bulb Temperature

Shaded area reflects ACCA (TVA) conditions

kW = Total system power

High and low pressures are measured at the liquid and suction service valves.

Amps = outdoor unit amps (comp.+fan)

Expanded Cooling Data — GLXS5BA2410A+CAPTA2422*3A* (cont.)*

			Outdoor Ambient Temperature																							
			65				75				85				95				105				115			
			Entering Indoor Wet Bulb Temperature																							
IDB	Airflow		59	63	67	71	59	63	67	71	59	63	67	71	59	63	67	71	59	63	67	71	59	63	67	71
80	700	MBh	24.5	24.8	25.5	26.6	24.2	24.6	25.3	26.4	23.6	24.0	24.7	25.8	22.5	22.9	**23.6**	24.7	21.2	21.6	22.3	23.4	20.0	20.4	21.1	22.2
		S/T	1.00	0.80	0.67	0.5	1.00	0.80	0.67	0.5	1.00	0.83	0.70	0.6	1.00	1.00	**0.72**	0.6	1.00	1.00	0.74	0.6	1.00	1.00	0.79	0.7
		ΔT	30	28	24	20	30	28	24	20	30	28	24	20	30	28	**24**	20	29	27	23	20	31	29	25	21
		kW	1.49	1.49	1.48	1.5	1.65	1.65	1.65	1.7	1.84	1.84	1.83	1.8	2.04	2.03	**2.03**	2.0	2.26	2.26	2.25	2.3	2.52	2.52	2.52	2.5
		Amps	5.4	5.4	5.4	5.4	6.2	6.1	6.1	6.2	7.0	7.0	7.0	7.0	7.9	7.9	**7.9**	7.9	8.9	8.9	8.9	9.0	10.1	10.1	10.1	10.2
	800	MBh	24.9	25.2	26.0	27.1	24.7	25.0	25.7	26.8	24.1	24.4	25.1	26.2	23.0	23.3	24.0	25.1	21.7	22.0	22.7	23.8	20.5	20.8	21.5	22.6
		S/T	1.00	0.83	0.70	0.6	1.00	0.84	0.71	0.6	1.00	0.86	0.73	0.6	1.00	1.00	0.75	0.6	1.00	1.00	0.77	0.6	1.00	1.00	0.82	0.7
		ΔT	28	26	23	19	28	26	23	19	29	27	23	19	28	26	23	19	28	26	22	18	29	27	24	20
		kW	1.50	1.49	1.49	1.50	1.66	1.66	1.66	1.67	1.85	1.84	1.84	1.85	2.04	2.04	2.04	2.05	2.27	2.27	2.26	2.28	2.53	2.53	2.52	2.54
		Amps	5.4	5.4	5.4	5.5	6.2	6.2	6.2	6.2	7.0	7.0	7.0	7.1	7.9	7.9	7.9	8.0	9.0	9.0	8.9	9.0	10.2	10.1	10.1	10.2
	900	MBh	25.4	25.8	26.5	27.6	25.2	25.6	26.3	27.4	24.6	24.9	25.7	26.8	23.5	23.9	24.6	25.7	22.2	22.5	23.3	24.4	21.0	21.3	22.1	23.2
		S/T	1.00	0.84	0.71	0.6	1.00	0.84	0.72	0.6	1.00	1.00	0.74	0.6	1.00	1.00	0.76	0.6	1.00	1.00	0.78	0.6	1.00	1.00	1.00	0.7
		ΔT	27	25	22	18	27	25	22	18	28	26	22	18	27	25	22	18	27	25	21	17	28	26	23	19
		kW	1.50	1.50	1.50	1.5	1.67	1.67	1.66	1.7	1.85	1.85	1.85	1.9	2.05	2.05	2.05	2.1	2.27	2.27	2.27	2.3	2.53	2.53	2.53	2.5
		Amps	5.5	5.5	5.4	5.5	6.2	6.2	6.2	6.3	7.1	7.1	7.0	7.1	8.0	8.0	8.0	8.0	9.0	9.0	9.0	9.0	10.2	10.2	10.2	10.2
85	700	MBh	24.9	25.2	25.9	27.0	24.7	25.0	25.7	26.8	24.0	24.4	25.1	26.2	22.9	**23.3**	24.0	25.1	21.6	22.0	22.7	23.8	20.4	20.8	21.5	22.6
		S/T	1.00	0.89	0.76	0.6	1.00	1.00	0.77	0.6	1.00	1.00	0.79	0.7	1.00	**1.00**	0.81	0.7	1.00	1.00	0.83	0.7	1.00	1.00	1.00	0.7
		ΔT	34	32	28	24	34	32	28	24	34	32	28	24	34	**31**	28	24	33	31	27	24	35	32	29	25
		kW	1.49	1.49	1.49	1.5	1.66	1.65	1.65	1.7	1.84	1.84	1.84	1.8	2.04	**2.04**	2.04	2.0	2.26	2.26	2.26	2.3	2.52	2.52	2.52	2.5
		Amps	5.4	5.4	5.4	5.4	6.2	6.2	6.1	6.2	7.0	7.0	7.0	7.0	7.9	**7.9**	7.9	8.0	8.9	8.9	8.9	9.0	10.1	10.1	10.1	10.2
	800	MBh	25.3	25.6	26.4	27.5	25.1	25.4	26.1	27.2	24.5	24.8	25.5	26.6	23.4	23.7	24.4	25.5	22.1	22.4	23.1	24.2	20.9	21.2	21.9	23.0
		S/T	1.00	0.93	0.80	0.7	1.00	1.00	0.80	0.7	1.00	1.00	0.83	0.7	1.00	1.00	0.85	0.7	1.00	1.00	1.00	0.7	1.00	1.00	1.00	0.8
		ΔT	32	30	27	23	32	30	27	23	33	31	27	23	32	30	27	23	32	30	26	22	33	31	28	24
		kW	1.50	1.50	1.50	1.51	1.66	1.66	1.66	1.67	1.85	1.85	1.84	1.86	2.05	2.05	2.04	2.06	2.27	2.27	2.27	2.28	2.53	2.53	2.53	2.54
		Amps	5.4	5.4	5.4	5.5	6.2	6.2	6.2	6.2	7.0	7.0	7.0	7.1	8.0	7.9	7.9	8.0	9.0	9.0	9.0	9.0	10.2	10.2	10.2	10.2
	900	MBh	25.8	26.2	26.9	28.0	25.6	26.0	26.7	27.8	25.0	25.3	26.1	27.2	23.9	**24.3**	25.0	26.1	22.6	22.9	23.7	24.8	21.4	21.7	22.5	23.6
		S/T	1.00	0.93	0.81	0.7	1.00	1.00	0.81	0.7	1.00	1.00	0.83	0.7	1.00	**1.00**	0.85	0.7	1.00	1.00	1.00	0.7	1.00	1.00	1.00	0.8
		ΔT	31	29	26	22	31	29	26	22	32	30	26	22	31	**29**	26	22	31	29	25	21	32	30	27	23
		kW	1.51	1.50	1.50	1.5	1.67	1.67	1.67	1.7	1.86	1.85	1.85	1.9	2.05	**2.05**	2.05	2.1	2.28	2.28	2.27	2.3	2.54	2.54	2.53	2.5
		Amps	5.5	5.5	5.5	5.5	6.2	6.2	6.2	6.3	7.1	7.1	7.1	7.1	8.0	**8.0**	8.0	8.0	9.0	9.0	9.0	9.0	10.2	10.2	10.2	10.2

IDB: Entering Indoor Dry Bulb Temperature

Shaded area reflects AHRI conditions

kW = Total system power

High and low pressures are measured at the liquid and suction service valves.

Amps = outdoor unit amps (comp.+fan)

			Outdoor Ambient Temperature																							
			65				75				85				95				105				115			
			Entering Indoor Wet Bulb Temperature																							
IDB	Airflow		59	63	67	71	59	63	67	71	59	63	67	71	59	63	67	71	59	63	67	71	59	63	67	71
70	900	MBh	29.5	29.9	30.8	-	29.2	29.6	30.5	-	28.5	28.9	29.7	-	27.2	27.6	28.4	-	25.6	26.0	26.8	-	24.1	24.5	25.4	-
		S/T	0.64	0.57	0.44	-	0.65	0.57	0.44	-	0.67	0.60	0.47	-	0.69	0.62	0.49	-	0.71	0.64	0.51	-	0.76	0.69	0.56	-
		ΔT	20	18	14	-	20	18	14	-	20	18	15	-	20	18	14	-	20	18	14	-	21	19	15	-
		kW	1.81	1.81	1.81	-	2.01	2.01	2.01	-	2.23	2.23	2.22	-	2.47	2.47	2.46	-	2.73	2.73	2.73	-	3.04	3.04	3.04	-
		Amps	6.5	6.5	6.5	-	7.4	7.4	7.4	-	8.4	8.4	8.4	-	9.5	9.5	9.5	-	10.7	10.7	10.7	-	12.1	12.1	12.1	-
	1000	MBh	29.9	30.3	31.2	-	29.6	30.0	30.9	-	28.9	29.3	30.1	-	27.6	28.0	28.8	-	26.0	26.4	27.2	-	24.5	24.9	25.8	-
		S/T	0.67	0.60	0.47	-	0.68	0.60	0.47	-	0.70	0.63	0.50	-	0.72	0.65	0.52	-	0.74	0.67	0.54	-	1.00	0.72	0.59	-
		ΔT	19	17	13	-	19	17	13	-	19	17	14	-	19	17	13	-	19	17	13	-	20	18	14	-
		kW	1.82	1.82	1.82	-	2.02	2.02	2.01	-	2.24	2.24	2.23	-	2.48	2.47	2.47	-	2.74	2.74	2.74	-	3.05	3.05	3.05	-
		Amps	6.5	6.5	6.5	-	7.4	7.4	7.4	-	8.4	8.4	8.4	-	9.5	9.5	9.5	-	10.7	10.7	10.7	-	12.2	12.1	12.1	-
	1125	MBh	30.5	30.9	31.8	-	30.2	30.6	31.5	-	29.5	29.9	30.7	-	28.2	28.6	29.4	-	26.6	27.0	27.8	-	25.1	25.5	26.4	-
		S/T	0.68	0.61	0.48	-	0.69	0.62	0.49	-	0.71	0.64	0.51	-	0.73	0.66	0.53	-	0.75	0.68	0.55	-	1.00	0.73	0.60	-
		ΔT	18	16	12	-	18	16	12	-	18	16	13	-	18	16	12	-	18	16	12	-	19	17	13	-
		kW	1.83	1.83	1.82	-	2.03	2.02	2.02	-	2.25	2.24	2.24	-	2.48	2.48	2.48	-	2.75	2.75	2.74	-	3.06	3.06	3.06	-
		Amps	6.6	6.5	6.5	-	7.5	7.4	7.4	-	8.5	8.5	8.4	-	9.5	9.5	9.5	-	10.8	10.8	10.7	-	12.2	12.2	12.2	-
75	900	MBh	29.5	29.9	30.8	32.1	29.2	29.6	30.5	31.8	28.5	28.9	29.8	31.1	27.2	**27.6**	28.4	29.8	25.6	26.0	26.9	28.2	24.1	24.5	25.4	26.7
		S/T	0.76	0.69	0.56	0.4	0.77	0.70	0.57	0.4	0.79	0.72	0.59	0.5	0.81	**0.74**	0.61	0.5	1.00	0.76	0.63	0.5	1.00	0.81	0.68	0.5
		ΔT	24	22	19	15	24	22	19	15	24	23	19	15	24	**22**	19	15	24	22	18	15	25	23	20	16
		kW	1.81	1.81	1.81	1.8	2.01	2.01	2.00	2.0	2.23	2.23	2.22	2.2	2.47	**2.46**	2.46	2.5	2.73	2.73	2.73	2.7	3.04	3.04	3.04	3.1
		Amps	6.5	6.5	6.5	6.5	7.4	7.4	7.4	7.4	8.4	8.4	8.4	8.4	9.5	**9.5**	9.4	9.5	10.7	10.7	10.7	10.7	12.1	12.1	12.1	12.2
	1000	MBh	29.9	30.3	31.2	32.5	29.6	30.1	30.9	32.2	28.9	29.3	30.2	31.5	27.6	28.0	28.9	30.2	26.0	26.4	27.3	28.6	24.5	24.9	25.8	27.1
		S/T	0.79	0.72	0.59	0.5	0.80	0.73	0.60	0.5	0.82	0.75	0.62	0.5	0.84	0.77	0.64	0.5	1.00	0.79	0.66	0.5	1.00	0.84	0.71	0.6
		ΔT	23	21	18	14	23	21	18	14	24	22	18	14	23	21	18	14	23	21	17	14	24	22	19	15
		kW	1.82	1.82	1.81	1.83	2.02	2.01	2.01	2.03	2.24	2.23	2.23	2.25	2.47	2.47	2.47	2.48	2.74	2.74	2.73	2.75	3.05	3.05	3.05	3.06
		Amps	6.5	6.5	6.5	6.6	7.4	7.4	7.4	7.5	8.4	8.4	8.4	8.5	9.5	9.5	9.5	9.6	10.7	10.7	10.7	10.8	12.1	12.1	12.1	12.2
	1125	MBh	30.5	30.9	31.8	33.1	30.2	30.7	31.5	32.9	29.5	29.9	30.8	32.1	28.2	**28.6**	29.5	30.8	26.6	27.0	27.9	29.2	25.1	25.5	26.4	27.7
		S/T	0.81	0.73	0.60	0.5	0.81	0.74	0.61	0.5	0.84	0.76	0.63	0.5	1.00	**0.78**	0.65	0.5	1.00	0.80	0.67	0.5	1.00	0.85	0.72	0.6
		ΔT	22	20	17	13	22	20	17	13	23	21	17	13	22	**20**	17	13	22	20	16	13	23	21	18	14
		kW	1.83	1.83	1.82	1.8	2.02	2.02	2.02	2.0	2.24	2.24	2.24	2.3	2.48	**2.48**	2.48	2.5	2.75	2.75	2.74	2.8	3.06	3.06	3.05	3.1
		Amps	6.6	6.5	6.5	6.6	7.5	7.4	7.4	7.5	8.5	8.4	8.4	8.5	9.5	**9.5**	9.5	9.6	10.8	10.8	10.7	10.8	12.2	12.2	12.2	12.2

IDB: Entering Indoor Dry Bulb Temperature

Shaded area reflects ACCA (TVA) conditions

kW = Total system power

High and low pressures are measured at the liquid and suction service valves.

Amps = outdoor unit amps (comp.+fan)

Expanded Cooling Data — GLXS5BA3010A*+CAPTA3026*3A* (cont.)

			Outdoor Ambient Temperature																							
			65				75				85				95				105				115			
			Entering Indoor Wet Bulb Temperature																							
IDB	Airflow		59	63	67	71	59	63	67	71	59	63	67	71	59	63	67	71	59	63	67	71	59	63	67	71
80	900	MBh	29.6	30.1	30.9	32.3	29.4	29.8	30.7	32.0	28.6	29.0	29.9	31.2	27.3	27.7	**28.6**	29.9	25.7	26.1	27.0	28.3	24.3	24.7	25.5	26.9
		S/T	0.89	0.81	0.68	0.5	0.89	0.82	0.69	0.6	1.00	0.84	0.71	0.6	1.00	0.86	**0.73**	0.6	1.00	0.88	0.75	0.6	1.00	0.93	0.80	0.7
		ΔT	29	27	23	19	29	27	23	19	29	27	23	19	28	27	**23**	19	28	26	23	19	29	28	24	20
		kW	1.81	1.81	1.81	1.8	2.01	2.01	2.00	2.0	2.23	2.23	2.22	2.2	2.47	2.47	**2.46**	2.5	2.73	2.73	2.73	2.7	3.04	3.04	3.04	3.1
		Amps	6.5	6.5	6.5	6.5	7.4	7.4	7.4	7.4	8.4	8.4	8.4	8.4	9.5	9.5	**9.5**	9.5	10.7	10.7	10.7	10.7	12.1	12.1	12.1	12.2
	1000	MBh	30.1	30.5	31.3	32.7	29.8	30.2	31.1	32.4	29.0	29.4	30.3	31.6	27.7	28.1	29.0	30.3	26.1	26.5	27.4	28.7	24.7	25.1	25.9	27.3
		S/T	0.92	0.84	0.71	0.6	0.92	0.85	0.72	0.6	1.00	0.87	0.74	0.6	1.00	0.89	0.76	0.6	1.00	0.91	0.78	0.6	1.00	0.96	0.83	0.7
		ΔT	28	26	22	18	28	26	22	18	28	26	22	19	28	26	22	18	27	25	22	18	29	27	23	19
		kW	1.82	1.82	1.82	1.83	2.02	2.02	2.01	2.03	2.24	2.24	2.23	2.25	2.47	2.47	2.47	2.48	2.74	2.74	2.74	2.75	3.05	3.05	3.05	3.06
		Amps	6.5	6.5	6.5	6.6	7.4	7.4	7.4	7.5	8.4	8.4	8.4	8.5	9.5	9.5	9.5	9.6	10.7	10.7	10.7	10.8	12.2	12.1	12.1	12.2
	1125	MBh	30.7	31.1	31.9	33.3	30.4	30.8	31.7	33.0	29.6	30.0	30.9	32.2	28.3	28.7	29.6	30.9	26.7	27.1	28.0	29.3	25.3	25.7	26.6	27.9
		S/T	0.93	0.86	0.72	0.6	1.00	0.86	0.73	0.6	1.00	0.89	0.75	0.6	1.00	0.90	0.77	0.6	1.00	0.93	0.79	0.7	1.00	1.00	0.84	0.7
		ΔT	27	25	21	17	27	25	21	17	27	25	21	18	27	25	21	17	26	24	21	17	28	26	22	18
		kW	1.83	1.83	1.82	1.8	2.03	2.02	2.02	2.0	2.25	2.24	2.24	2.3	2.48	2.48	2.48	2.5	2.75	2.75	2.74	2.8	3.06	3.06	3.06	3.1
		Amps	6.6	6.5	6.5	6.6	7.5	7.4	7.4	7.5	8.5	8.5	8.4	8.5	9.5	9.5	9.5	9.6	10.8	10.8	10.7	10.8	12.2	12.2	12.2	12.2
85	900	MBh	30.1	30.5	31.4	32.7	29.9	30.3	31.2	32.5	29.1	29.5	30.4	31.7	27.8	**28.2**	29.1	30.4	26.2	26.6	27.5	28.8	24.8	25.2	26.0	27.4
		S/T	1.00	0.91	0.78	0.6	1.00	0.92	0.78	0.6	1.00	0.94	0.81	0.7	1.00	**0.96**	0.83	0.7	1.00	1.00	0.85	0.7	1.00	1.00	0.90	0.8
		ΔT	32	30	27	23	32	30	27	23	33	31	27	23	32	**30**	27	23	32	30	26	23	33	31	28	24
		kW	1.82	1.82	1.81	1.8	2.01	2.01	2.01	2.0	2.23	2.23	2.23	2.2	2.47	**2.47**	2.47	2.5	2.74	2.73	2.73	2.7	3.05	3.05	3.04	3.1
		Amps	6.5	6.5	6.5	6.5	7.4	7.4	7.4	7.4	8.4	8.4	8.4	8.5	9.5	**9.5**	9.5	9.5	10.7	10.7	10.7	10.8	12.1	12.1	12.1	12.2
	1000	MBh	30.5	31.0	31.8	33.1	30.3	30.7	31.6	32.9	29.5	29.9	30.8	32.1	28.2	28.6	29.5	30.8	26.6	27.0	27.9	29.2	25.2	25.6	26.4	27.8
		S/T	1.00	0.94	0.81	0.7	1.00	0.95	0.81	0.7	1.00	0.97	0.84	0.7	1.00	1.00	0.86	0.7	1.00	1.00	0.88	0.7	1.00	1.00	0.93	0.8
		ΔT	32	30	26	22	31	30	26	22	32	30	26	22	31	29	26	22	31	29	26	22	32	30	27	23
		kW	1.82	1.82	1.82	1.83	2.02	2.02	2.02	2.03	2.24	2.24	2.24	2.25	2.48	2.48	2.47	2.49	2.74	2.74	2.74	2.75	3.06	3.05	3.05	3.07
		Amps	6.5	6.5	6.5	6.6	7.4	7.4	7.4	7.5	8.4	8.4	8.4	8.5	9.5	9.5	9.5	9.6	10.7	10.7	10.7	10.8	12.2	12.2	12.1	12.2
	1125	MBh	31.1	31.6	32.4	33.8	30.9	31.3	32.2	33.5	30.1	30.5	31.4	32.7	28.8	**29.2**	30.1	31.4	27.2	27.6	28.5	29.8	25.8	26.2	27.0	28.4
		S/T	1.00	0.95	0.82	0.7	1.00	0.96	0.83	0.7	1.00	0.98	0.85	0.7	1.00	**1.00**	0.87	0.7	1.00	1.00	0.89	0.8	1.00	1.00	0.94	0.8
		ΔT	31	29	25	21	30	29	25	21	31	29	25	21	30	**29**	25	21	30	28	25	21	31	29	26	22
		kW	1.83	1.83	1.83	1.8	2.03	2.03	2.02	2.0	2.25	2.25	2.24	2.3	2.49	**2.49**	2.48	2.5	2.75	2.75	2.75	2.8	3.06	3.06	3.06	3.1
		Amps	6.6	6.6	6.5	6.6	7.5	7.5	7.5	7.5	8.5	8.5	8.5	8.5	9.6	**9.6**	9.5	9.6	10.8	10.8	10.8	10.8	12.2	12.2	12.2	12.3

IDB: Entering Indoor Dry Bulb Temperature

Shaded area reflects AHRI conditions

kW = Total system power

High and low pressures are measured at the liquid and suction service valves.

Amps = outdoor unit amps (comp.+fan)

			Outdoor Ambient Temperature																							
			65				75				85				95				105				115			
			Entering Indoor Wet Bulb Temperature																							
IDB	Airflow		59	63	67	71	59	63	67	71	59	63	67	71	59	63	67	71	59	63	67	71	59	63	67	71
70	1050	MBh	35.3	35.7	36.8	-	34.9	35.4	36.5	-	34.0	34.5	35.6	-	32.4	32.9	34.0	-	30.5	31.0	32.1	-	28.7	29.2	30.3	-
		S/T	0.61	0.54	0.40	-	0.62	0.54	0.41	-	0.65	0.57	0.43	-	1.00	0.59	0.45	-	1.00	0.61	0.48	-	1.00	0.66	0.53	-
		ΔT	20	18	15	-	20	18	15	-	21	19	15	-	20	18	15	-	20	18	15	-	21	19	16	-
		kW	2.18	2.18	2.18	-	2.42	2.42	2.42	-	2.69	2.68	2.68	-	2.97	2.97	2.97	-	3.30	3.29	3.29	-	3.67	3.67	3.67	-
		Amps	7.6	7.6	7.6	-	8.7	8.7	8.7	-	9.9	9.9	9.9	-	11.2	11.2	11.2	-	12.7	12.7	12.7	-	14.4	14.4	14.4	-
	1180	MBh	35.7	36.2	37.2	-	35.3	35.8	36.9	-	34.4	34.9	36.0	-	32.8	33.3	34.4	-	30.9	31.4	32.5	-	29.2	29.6	30.7	-
		S/T	0.67	0.59	0.45	-	0.67	0.60	0.46	-	0.70	0.62	0.49	-	1.00	0.64	0.50	-	1.00	0.66	0.53	-	1.00	0.71	0.58	-
		ΔT	19	17	14	-	19	17	14	-	20	18	14	-	19	17	14	-	19	17	14	-	20	18	15	-
		kW	2.19	2.19	2.19	-	2.43	2.43	2.43	-	2.70	2.70	2.69	-	2.98	2.98	2.98	-	3.31	3.30	3.30	-	3.68	3.68	3.68	-
		Amps	7.6	7.6	7.6	-	8.7	8.7	8.7	-	10.0	9.9	9.9	-	11.3	11.3	11.2	-	12.7	12.7	12.7	-	14.5	14.5	14.4	-
	1350	MBh	36.3	36.8	37.9	-	36.0	36.5	37.5	-	35.1	35.6	36.6	-	33.5	34.0	35.0	-	31.6	32.1	33.1	-	29.8	30.3	31.3	-
		S/T	0.70	0.63	0.49	-	0.71	0.63	0.50	-	1.00	0.66	0.52	-	1.00	0.68	0.54	-	1.00	0.70	0.56	-	1.00	1.00	0.62	-
		ΔT	18	16	13	-	18	16	13	-	18	17	13	-	18	16	13	-	18	16	13	-	19	17	14	-
		kW	2.21	2.20	2.20	-	2.44	2.44	2.44	-	2.71	2.71	2.70	-	3.00	2.99	2.99	-	3.32	3.32	3.31	-	3.69	3.69	3.69	-
		Amps	7.7	7.7	7.7	-	8.8	8.8	8.8	-	10.0	10.0	10.0	-	11.3	11.3	11.3	-	12.8	12.8	12.8	-	14.5	14.5	14.5	-
75	1050	MBh	35.3	35.8	36.8	38.4	35.0	35.5	36.5	38.1	34.0	34.5	35.6	37.2	32.5	33.0	34.0	35.6	30.5	31.0	32.1	33.7	28.8	29.3	30.3	31.9
		S/T	0.74	0.67	0.53	0.4	1.00	0.67	0.54	0.4	1.00	0.70	0.56	0.4	1.00	0.72	0.58	0.4	1.00	0.74	0.60	0.5	1.00	1.00	0.66	0.5
		ΔT	25	23	19	15	24	23	19	15	25	23	19	16	24	23	19	15	24	22	19	15	25	24	20	16
		kW	2.18	2.18	2.18	2.2	2.42	2.42	2.41	2.4	2.69	2.68	2.68	2.7	2.97	2.97	2.97	3.0	3.29	3.29	3.29	3.3	3.67	3.67	3.66	3.7
		Amps	7.6	7.6	7.6	7.6	8.7	8.7	8.7	8.7	9.9	9.9	9.9	10.0	11.2	11.2	11.2	11.3	12.7	12.7	12.7	12.7	14.4	14.4	14.4	14.5
	1180	MBh	35.7	36.2	37.2	38.8	35.4	35.9	36.9	38.5	34.5	34.9	36.0	37.6	32.9	**33.4**	34.4	36.0	30.9	31.4	32.5	34.1	29.2	29.7	30.7	32.3
		S/T	0.79	0.72	0.58	0.4	1.00	0.72	0.59	0.4	1.00	0.75	0.61	0.5	1.00	**0.77**	0.63	0.5	1.00	1.00	0.66	0.5	1.00	1.00	0.71	0.6
		ΔT	24	22	18	14	23	22	18	14	24	22	18	15	23	**22**	18	14	23	21	18	14	24	23	19	15
		kW	2.19	2.19	2.19	2.20	2.43	2.43	2.42	2.44	2.70	2.69	2.69	2.71	2.98	**2.98**	2.98	3.00	3.30	3.30	3.30	3.32	3.68	3.68	3.68	3.69
		Amps	7.6	7.6	7.6	7.7	8.7	8.7	8.7	8.8	9.9	9.9	9.9	10.0	11.3	**11.3**	11.2	11.3	12.7	12.7	12.7	12.8	14.5	14.4	14.4	14.5
	1350	MBh	36.3	36.8	37.9	39.5	36.0	36.5	37.6	39.2	35.1	35.6	36.6	38.3	33.5	**34.0**	35.1	36.7	31.6	32.1	33.1	34.7	29.8	30.3	31.4	33.0
		S/T	0.83	0.76	0.62	0.5	1.00	0.76	0.63	0.5	1.00	0.79	0.65	0.5	1.00	**0.81**	0.67	0.5	1.00	1.00	0.69	0.6	1.00	1.00	0.74	0.6
		ΔT	22	21	17	13	22	20	17	13	23	21	17	14	22	**20**	17	13	22	20	17	13	23	21	18	14
		kW	2.20	2.20	2.20	2.2	2.44	2.44	2.44	2.5	2.71	2.71	2.70	2.7	3.00	**2.99**	2.99	3.0	3.32	3.31	3.31	3.3	3.69	3.69	3.69	3.7
		Amps	7.7	7.7	7.7	7.8	8.8	8.8	8.8	8.8	10.0	10.0	10.0	10.1	11.3	**11.3**	11.3	11.4	12.8	12.8	12.8	12.8	14.5	14.5	14.5	14.6

IDB: Entering Indoor Dry Bulb Temperature

Shaded area reflects ACCA (TVA) conditions

kW = Total system power

High and low pressures are measured at the liquid and suction service valves.

Amps = outdoor unit amps (comp.+fan)

Expanded Cooling Data — GLXS5BA3610A*+CAPTA3626*3A* (cont.)

			Outdoor Ambient Temperature																							
			65				75				85				95				105				115			
			Entering Indoor Wet Bulb Temperature																							
IDB	Airflow		59	63	67	71	59	63	67	71	59	63	67	71	59	63	67	71	59	63	67	71	59	63	67	71
80	1050	MBh	35.5	36.0	37.0	38.6	35.1	35.6	36.7	38.3	34.2	34.7	35.8	37.4	32.6	33.1	34.2	35.8	30.7	31.2	32.3	33.9	28.9	29.4	30.5	32.1
		S/T	1.00	0.79	0.66	0.5	1.00	0.80	0.66	0.5	1.00	0.82	0.69	0.5	1.00	1.00	0.71	0.6	1.00	1.00	0.73	0.6	1.00	1.00	0.78	0.6
		ΔT	29	27	23	20	29	27	23	20	29	27	24	20	29	27	23	20	28	27	23	19	30	28	24	20
		kW	2.18	2.18	2.18	2.2	2.42	2.42	2.41	2.4	2.69	2.68	2.68	2.7	2.97	2.97	2.97	3.0	3.30	3.29	3.29	3.3	3.67	3.67	3.67	3.7
		Amps	7.6	7.6	7.6	7.7	8.7	8.7	8.7	8.7	9.9	9.9	9.9	10.0	11.2	11.2	11.2	11.3	12.7	12.7	12.7	12.7	14.4	14.4	14.4	14.5
	1180	MBh	35.9	36.4	37.4	39.0	35.6	36.0	37.1	38.7	34.6	35.1	36.2	37.8	33.1	33.5	**34.6**	36.2	31.1	31.6	32.7	34.3	29.4	29.9	30.9	32.5
		S/T	1.00	0.84	0.71	0.6	1.00	0.85	0.71	0.6	1.00	0.88	0.74	0.6	1.00	1.00	**0.76**	0.6	1.00	1.00	0.78	0.6	1.00	1.00	0.83	0.7
		ΔT	28	26	22	19	28	26	22	19	28	26	23	19	28	26	**22**	19	27	26	22	18	29	27	23	19
		kW	2.19	2.19	2.19	2.21	2.43	2.43	2.43	2.44	2.70	2.70	2.69	2.71	2.98	2.98	**2.98**	3.00	3.31	3.30	3.30	3.32	3.68	3.68	3.68	3.70
		Amps	7.6	7.6	7.6	7.7	8.7	8.7	8.7	8.8	10.0	9.9	9.9	10.0	11.3	11.3	**11.2**	11.3	12.7	12.7	12.7	12.8	14.5	14.5	14.4	14.5
	1350	MBh	36.5	37.0	38.1	39.7	36.2	36.7	37.7	39.4	35.3	35.8	36.8	38.4	33.7	34.2	35.2	36.9	31.8	32.3	33.3	34.9	30.0	30.5	31.6	33.2
		S/T	1.00	0.88	0.75	0.6	1.00	0.89	0.75	0.6	1.00	1.00	0.78	0.6	1.00	1.00	0.80	0.7	1.00	1.00	0.82	0.7	1.00	1.00	1.00	0.7
		ΔT	27	25	21	18	27	25	21	17	27	25	21	18	27	25	21	17	26	24	21	17	27	26	22	18
		kW	2.21	2.20	2.20	2.2	2.44	2.44	2.44	2.5	2.71	2.71	2.70	2.7	3.00	2.99	2.99	3.0	3.32	3.32	3.31	3.3	3.69	3.69	3.69	3.7
		Amps	7.7	7.7	7.7	7.8	8.8	8.8	8.8	8.8	10.0	10.0	10.0	10.1	11.3	11.3	11.3	11.4	12.8	12.8	12.8	12.8	14.5	14.5	14.5	14.6
85	1050	MBh	36.0	36.5	37.6	39.2	35.7	36.2	37.3	38.9	34.8	35.3	36.4	38.0	33.2	**33.7**	34.8	36.4	31.3	31.8	32.8	34.5	29.5	30.0	31.1	32.7
		S/T	1.00	0.89	0.76	0.6	1.00	1.00	0.76	0.6	1.00	1.00	0.79	0.6	1.00	**1.00**	0.81	0.7	1.00	1.00	1.00	0.7	1.00	1.00	1.00	0.7
		ΔT	32	31	27	23	32	31	27	23	33	31	27	24	32	**30**	27	23	32	30	27	23	33	31	28	24
		kW	2.19	2.19	2.18	2.2	2.43	2.42	2.42	2.4	2.69	2.69	2.69	2.7	2.98	**2.98**	2.97	3.0	3.30	3.30	3.29	3.3	3.68	3.67	3.67	3.7
		Amps	7.6	7.6	7.6	7.7	8.7	8.7	8.7	8.8	9.9	9.9	9.9	10.0	11.2	**11.2**	11.2	11.3	12.7	12.7	12.7	12.8	14.4	14.4	14.4	14.5
	1180	MBh	36.5	37.0	38.0	39.6	36.1	36.6	37.7	39.3	35.2	35.7	36.8	38.4	33.6	34.1	35.2	36.8	31.7	32.2	33.3	34.9	29.9	30.4	31.5	33.1
		S/T	1.00	0.95	0.81	0.7	1.00	1.00	0.82	0.7	1.00	1.00	0.84	0.7	1.00	1.00	0.86	0.7	1.00	1.00	1.00	0.7	1.00	1.00	1.00	0.8
		ΔT	31	30	26	22	31	30	26	22	32	30	26	23	31	29	26	22	31	29	26	22	32	30	27	23
		kW	2.20	2.20	2.19	2.21	2.44	2.43	2.43	2.45	2.70	2.70	2.70	2.71	2.99	2.99	2.98	3.00	3.31	3.31	3.30	3.32	3.69	3.69	3.68	3.70
		Amps	7.7	7.7	7.6	7.7	8.8	8.7	8.7	8.8	10.0	10.0	9.9	10.0	11.3	11.3	11.3	11.3	12.8	12.8	12.7	12.8	14.5	14.5	14.5	14.5
	1350	MBh	37.1	37.6	38.7	40.3	36.8	37.3	38.3	39.9	35.9	36.4	37.4	39.0	34.3	**34.8**	35.8	37.4	32.4	32.9	33.9	35.5	30.6	31.1	32.1	33.8
		S/T	1.00	0.98	0.85	0.7	1.00	1.00	0.85	0.7	1.00	1.00	0.88	0.7	1.00	**1.00**	0.90	0.8	1.00	1.00	1.00	0.8	1.00	1.00	1.00	0.8
		ΔT	30	28	25	21	30	28	25	21	31	29	25	21	30	**28**	25	21	30	28	25	21	31	29	26	22
		kW	2.21	2.21	2.20	2.2	2.45	2.45	2.44	2.5	2.71	2.71	2.71	2.7	3.00	**3.00**	3.00	3.0	3.32	3.32	3.32	3.3	3.70	3.70	3.69	3.7
		Amps	7.7	7.7	7.7	7.8	8.8	8.8	8.8	8.9	10.0	10.0	10.0	10.1	11.3	**11.3**	11.3	11.4	12.8	12.8	12.8	12.9	14.5	14.5	14.5	14.6

IDB: Entering Indoor Dry Bulb Temperature

Shaded area reflects AHRI conditions

kW = Total system power

High and low pressures are measured at the liquid and suction service valves.

Amps = outdoor unit amps (comp.+fan)

Expanded Cooling Data — GLXS5BA4210A*+CAPTA4230*3A*

			Outdoor Ambient Temperature																							
			65				75				85				95				105				115			
			Entering Indoor Wet Bulb Temperature																							
IDB	Airflow		59	63	67	71	59	63	67	71	59	63	67	71	59	63	67	71	59	63	67	71	59	63	67	71
70	1225	MBh	40.7	41.3	42.5	-	40.3	40.9	42.1	-	39.3	39.8	41.1	-	37.4	38.0	39.2	-	35.2	35.8	37.0	-	33.2	33.7	35.0	-
		S/T	0.61	0.53	0.40	-	0.61	0.54	0.40	-	0.64	0.56	0.43	-	1.00	0.58	0.45	-	1.00	0.60	0.47	-	1.00	0.66	0.52	-
		ΔT	21	19	15	-	21	19	15	-	21	19	15	-	20	19	15	-	20	18	15	-	21	20	16	-
		kW	2.53	2.53	2.52	-	2.80	2.80	2.79	-	3.11	3.10	3.10	-	3.44	3.43	3.43	-	3.81	3.80	3.80	-	4.24	4.24	4.23	-
		Amps	8.7	8.7	8.7	-	10.0	10.0	10.0	-	11.4	11.4	11.4	-	12.9	12.9	12.9	-	14.6	14.6	14.6	-	16.6	16.6	16.5	-
	1400	MBh	41.2	41.8	43.0	-	40.9	41.4	42.7	-	39.8	40.4	41.6	-	38.0	38.5	39.8	-	35.7	36.3	37.5	-	33.7	34.3	35.5	-
		S/T	0.67	0.59	0.46	-	0.67	0.60	0.46	-	0.70	0.62	0.49	-	1.00	0.64	0.51	-	1.00	0.66	0.53	-	1.00	0.72	0.58	-
		ΔT	19	18	14	-	19	17	14	-	20	18	14	-	19	17	14	-	19	17	14	-	20	18	15	-
		kW	2.54	2.54	2.54	-	2.82	2.81	2.81	-	3.12	3.12	3.11	-	3.45	3.45	3.44	-	3.82	3.82	3.81	-	4.25	4.25	4.24	-
		Amps	8.8	8.8	8.8	-	10.1	10.1	10.0	-	11.5	11.4	11.4	-	13.0	13.0	12.9	-	14.7	14.6	14.6	-	16.6	16.6	16.6	-
	1575	MBh	41.9	42.4	43.7	-	41.5	42.1	43.3	-	40.4	41.0	42.2	-	38.6	39.2	40.4	-	36.4	37.0	38.2	-	34.3	34.9	36.1	-
		S/T	0.70	0.63	0.49	-	0.71	0.63	0.50	-	0.73	0.66	0.52	-	1.00	0.68	0.54	-	1.00	0.70	0.56	-	1.00	0.75	0.61	-
		ΔT	18	17	13	-	18	16	13	-	19	17	13	-	18	16	13	-	18	16	13	-	19	17	14	-
		kW	2.55	2.55	2.55	-	2.83	2.83	2.82	-	3.13	3.13	3.13	-	3.46	3.46	3.46	-	3.83	3.83	3.82	-	4.26	4.26	4.26	-
		Amps	8.9	8.9	8.8	-	10.1	10.1	10.1	-	11.5	11.5	11.5	-	13.0	13.0	13.0	-	14.7	14.7	14.7	-	16.7	16.7	16.7	-
75	1225	MBh	40.7	41.3	42.5	44.4	40.4	40.9	42.1	44.0	39.3	39.9	41.1	42.9	37.5	38.0	39.3	41.1	35.2	35.8	37.0	38.9	33.2	33.8	35.0	36.8
		S/T	0.74	0.66	0.52	0.4	0.74	0.67	0.53	0.4	1.00	0.69	0.56	0.4	1.00	0.71	0.58	0.4	1.00	0.73	0.60	0.5	1.00	1.00	0.65	0.5
		ΔT	25	23	19	16	25	23	19	16	25	23	20	16	25	23	19	16	24	23	19	15	26	24	20	16
		kW	2.53	2.52	2.52	2.5	2.80	2.80	2.79	2.8	3.10	3.10	3.10	3.1	3.43	3.43	3.43	3.4	3.80	3.80	3.80	3.8	4.24	4.23	4.23	4.2
		Amps	8.7	8.7	8.7	8.8	10.0	10.0	10.0	10.1	11.4	11.4	11.4	11.4	12.9	12.9	12.9	13.0	14.6	14.6	14.6	14.6	16.6	16.6	16.5	16.6
	1400	MBh	41.3	41.8	43.0	44.9	40.9	41.5	42.7	44.5	39.8	40.4	41.6	43.5	38.0	**38.6**	39.8	41.6	35.8	36.3	37.6	39.4	33.7	34.3	35.5	37.4
		S/T	0.80	0.72	0.58	0.4	1.00	0.73	0.59	0.4	1.00	0.75	0.62	0.5	1.00	**0.77**	0.64	0.5	1.00	0.79	0.66	0.5	1.00	1.00	0.71	0.6
		ΔT	24	22	18	14	24	22	18	14	24	22	18	15	24	**22**	18	14	23	21	18	14	24	23	19	15
		kW	2.54	2.54	2.53	2.55	2.81	2.81	2.81	2.83	3.12	3.12	3.11	3.13	3.45	**3.45**	3.44	3.46	3.82	3.82	3.81	3.83	4.25	4.25	4.24	4.26
		Amps	8.8	8.8	8.8	8.9	10.1	10.0	10.0	10.1	11.5	11.4	11.4	11.5	13.0	**13.0**	12.9	13.0	14.6	14.6	14.6	14.7	16.6	16.6	16.6	16.7
	1575	MBh	41.9	42.5	43.7	45.5	41.5	42.1	43.3	45.2	40.5	41.0	42.3	44.1	38.6	**39.2**	40.4	42.3	36.4	37.0	38.2	40.1	34.4	34.9	36.2	38.0
		S/T	0.83	0.75	0.62	0.5	1.00	0.76	0.62	0.5	1.00	0.79	0.65	0.5	1.00	**0.81**	0.67	0.5	1.00	1.00	0.69	0.5	1.00	1.00	0.74	0.6
		ΔT	23	21	17	13	23	21	17	13	23	21	17	14	23	**21**	17	13	22	20	17	13	23	22	18	14
		kW	2.55	2.55	2.55	2.6	2.83	2.82	2.82	2.8	3.13	3.13	3.12	3.1	3.46	**3.46**	3.45	3.5	3.83	3.83	3.82	3.8	4.26	4.26	4.26	4.3
		Amps	8.9	8.8	8.8	8.9	10.1	10.1	10.1	10.2	11.5	11.5	11.5	11.6	13.0	**13.0**	13.0	13.1	14.7	14.7	14.7	14.8	16.7	16.7	16.7	16.7

IDB: Entering Indoor Dry Bulb Temperature

Shaded area reflects ACCA (TVA) conditions

kW = Total system power

High and low pressures are measured at the liquid and suction service valves.

Amps = outdoor unit amps (comp.+fan)

Expanded Cooling Data — GLXS5BA4210A*+CAPTA4230*3A* (cont.)

			Outdoor Ambient Temperature																							
			65				75				85				95				105				115			
			Entering Indoor Wet Bulb Temperature																							
IDB	Airflow		59	63	67	71	59	63	67	71	59	63	67	71	59	63	67	71	59	63	67	71	59	63	67	71
80	1225	MBh	40.9	41.5	42.7	44.6	40.6	41.1	42.4	44.2	39.5	40.1	41.3	43.2	37.7	38.2	39.5	41.3	35.4	36.0	37.2	39.1	33.4	34.0	35.2	37.0
		S/T	1.00	0.79	0.65	0.5	1.00	0.79	0.66	0.5	1.00	0.82	0.68	0.5	1.00	1.00	0.70	0.6	1.00	1.00	0.72	0.6	1.00	1.00	0.77	0.6
		ΔT	29	27	23	20	29	27	23	20	29	27	24	20	29	27	23	20	29	27	23	19	30	28	24	21
		kW	2.53	2.53	2.52	2.5	2.80	2.80	2.79	2.8	3.11	3.10	3.10	3.1	3.44	3.43	3.43	3.5	3.80	3.80	3.80	3.8	4.24	4.24	4.23	4.3
		Amps	8.7	8.7	8.7	8.8	10.0	10.0	10.0	10.1	11.4	11.4	11.4	11.5	12.9	12.9	12.9	13.0	14.6	14.6	14.6	14.7	16.6	16.6	16.5	16.6
	1400	MBh	41.5	42.0	43.3	45.1	41.1	41.7	42.9	44.7	40.0	40.6	41.8	43.7	38.2	38.8	**40.0**	41.9	36.0	36.5	37.8	39.6	33.9	34.5	35.7	37.6
		S/T	1.00	0.85	0.71	0.6	1.00	0.85	0.72	0.6	1.00	0.88	0.74	0.6	1.00	1.00	**0.76**	0.6	1.00	1.00	0.78	0.6	1.00	1.00	0.83	0.7
		ΔT	28	26	22	19	28	26	22	19	28	26	23	19	28	26	**22**	19	27	26	22	18	29	27	23	20
		kW	2.54	2.54	2.54	2.56	2.82	2.81	2.81	2.83	3.12	3.12	3.11	3.13	3.45	3.45	**3.44**	3.46	3.82	3.82	3.81	3.83	4.25	4.25	4.24	4.27
		Amps	8.8	8.8	8.8	8.9	10.1	10.1	10.0	10.1	11.5	11.4	11.4	11.5	13.0	13.0	**12.9**	13.0	14.7	14.6	14.6	14.7	16.6	16.6	16.6	16.7
	1575	MBh	42.1	42.7	43.9	45.8	41.7	42.3	43.5	45.4	40.7	41.3	42.5	44.3	38.9	39.4	40.6	42.5	36.6	37.2	38.4	40.3	34.6	35.2	36.4	38.2
		S/T	1.00	0.88	0.74	0.6	1.00	0.89	0.75	0.6	1.00	0.91	0.78	0.6	1.00	1.00	0.80	0.7	1.00	1.00	0.82	0.7	1.00	1.00	0.87	0.7
		ΔT	27	25	21	18	27	25	21	18	27	25	22	18	27	25	21	18	27	25	21	17	28	26	22	19
		kW	2.55	2.55	2.55	2.6	2.83	2.83	2.82	2.8	3.13	3.13	3.13	3.1	3.46	3.46	3.46	3.5	3.83	3.83	3.82	3.8	4.26	4.26	4.26	4.3
		Amps	8.9	8.9	8.8	8.9	10.1	10.1	10.1	10.2	11.5	11.5	11.5	11.6	13.0	13.0	13.0	13.1	14.7	14.7	14.7	14.8	16.7	16.7	16.7	16.8
85	1225	MBh	41.6	42.2	43.4	45.3	41.3	41.8	43.0	44.9	40.2	40.8	42.0	43.8	38.4	38.9	40.2	42.0	36.1	36.7	37.9	39.8	34.1	34.7	35.9	37.7
		S/T	1.00	0.89	0.75	0.6	1.00	1.00	0.76	0.6	1.00	1.00	0.78	0.6	1.00	1.00	0.80	0.7	1.00	1.00	0.82	0.7	1.00	1.00	1.00	0.7
		ΔT	33	31	27	24	33	31	27	23	33	31	27	24	33	31	27	23	32	30	27	23	34	32	28	24
		kW	2.53	2.53	2.53	2.5	2.81	2.80	2.80	2.8	3.11	3.11	3.10	3.1	3.44	3.44	3.43	3.5	3.81	3.81	3.80	3.8	4.24	4.24	4.24	4.3
		Amps	8.8	8.8	8.7	8.8	10.0	10.0	10.0	10.1	11.4	11.4	11.4	11.5	12.9	12.9	12.9	13.0	14.6	14.6	14.6	14.7	16.6	16.6	16.6	16.7
	1400	MBh	42.2	42.7	43.9	45.8	41.8	42.4	43.6	45.4	40.7	41.3	42.5	44.4	38.9	39.5	40.7	42.5	36.7	37.2	38.5	40.3	34.6	35.2	36.4	38.3
		S/T	1.00	0.95	0.81	0.7	1.00	1.00	0.82	0.7	1.00	1.00	0.84	0.7	1.00	1.00	0.86	0.7	1.00	1.00	1.00	0.7	1.00	1.00	1.00	0.8
		ΔT	32	30	26	22	31	30	26	22	32	30	26	23	31	30	26	22	31	29	26	22	32	30	27	23
		kW	2.55	2.55	2.54	2.56	2.82	2.82	2.81	2.83	3.13	3.12	3.12	3.14	3.46	3.45	3.45	3.47	3.82	3.82	3.82	3.84	4.26	4.25	4.25	4.27
		Amps	8.8	8.8	8.8	8.9	10.1	10.1	10.1	10.1	11.5	11.5	11.4	11.5	13.0	13.0	13.0	13.1	14.7	14.7	14.6	14.7	16.7	16.6	16.6	16.7
	1575	MBh	42.8	43.4	44.6	46.4	42.4	43.0	44.2	46.1	41.4	41.9	43.2	45.0	39.5	40.1	41.3	43.2	37.3	37.9	39.1	41.0	35.3	35.8	37.1	38.9
		S/T	1.00	0.98	0.85	0.7	1.00	1.00	0.85	0.7	1.00	1.00	0.88	0.7	1.00	1.00	0.90	0.8	1.00	1.00	1.00	0.8	1.00	1.00	1.00	0.8
		ΔT	31	29	25	21	31	29	25	21	31	29	25	22	30	29	25	21	30	28	25	21	31	30	26	22
		kW	2.56	2.56	2.55	2.6	2.83	2.83	2.83	2.8	3.14	3.14	3.13	3.2	3.47	3.47	3.46	3.5	3.84	3.83	3.83	3.9	4.27	4.27	4.26	4.3
		Amps	8.9	8.9	8.9	9.0	10.1	10.1	10.1	10.2	11.5	11.5	11.5	11.6	13.0	13.0	13.0	13.1	14.7	14.7	14.7	14.8	16.7	16.7	16.7	16.8

IDB: Entering Indoor Dry Bulb Temperature

Shaded area reflects AHRI conditions

kW = Total system power

High and low pressures are measured at the liquid and suction service valves.

Amps = outdoor unit amps (comp.+fan)

			Outdoor Ambient Temperature																							
			65				75				85				95				105				115			
			Entering Indoor Wet Bulb Temperature																							
IDB	Airflow		59	63	67	71	59	63	67	71	59	63	67	71	59	63	67	71	59	63	67	71	59	63	67	71
70	1450	MBh	46.9	47.6	48.9	-	46.5	47.1	48.5	-	45.3	45.9	47.3	-	43.2	43.9	45.2	-	40.7	41.3	42.7	-	38.3	39.0	40.4	-
		S/T	0.63	0.56	0.43	-	0.63	0.56	0.43	-	0.66	0.59	0.46	-	0.68	0.60	0.48	-	1.00	0.62	0.50	-	1.00	0.67	0.55	-
		ΔT	19	17	14	-	19	17	14	-	19	17	14	-	19	17	14	-	19	17	13	-	20	18	15	-
		kW	2.86	2.86	2.85	-	3.18	3.18	3.17	-	3.54	3.54	3.53	-	3.93	3.92	3.92	-	4.36	4.36	4.35	-	4.87	4.86	4.86	-
		Amps	10.2	10.2	10.1	-	11.6	11.6	11.6	-	13.3	13.3	13.2	-	15.0	15.0	15.0	-	17.0	17.0	17.0	-	19.3	19.3	19.3	-
	1600	MBh	47.5	48.1	49.5	-	47.1	47.7	49.1	-	45.9	46.5	47.9	-	43.8	44.4	45.8	-	41.2	41.9	43.3	-	38.9	39.6	41.0	-
		S/T	0.66	0.58	0.46	-	0.66	0.59	0.46	-	0.69	0.61	0.49	-	0.70	0.63	0.50	-	1.00	0.65	0.53	-	1.00	0.70	0.57	-
		ΔT	18	16	13	-	18	16	13	-	18	17	13	-	18	16	13	-	18	16	13	-	19	17	14	-
		kW	2.87	2.87	2.87	-	3.19	3.19	3.19	-	3.55	3.55	3.54	-	3.94	3.94	3.93	-	4.37	4.37	4.36	-	4.88	4.87	4.87	-
		Amps	10.2	10.2	10.2	-	11.7	11.7	11.7	-	13.3	13.3	13.3	-	15.1	15.1	15.1	-	17.1	17.1	17.0	-	19.4	19.4	19.4	-
	1800	MBh	48.4	49.1	50.5	-	48.0	48.7	50.1	-	46.8	47.5	48.9	-	44.7	45.4	46.8	-	42.2	42.9	44.2	-	39.9	40.5	41.9	-
		S/T	0.67	0.60	0.47	-	0.68	0.60	0.48	-	0.70	0.63	0.50	-	1.00	0.65	0.52	-	1.00	0.67	0.54	-	1.00	0.72	0.59	-
		ΔT	17	15	12	-	17	15	12	-	18	16	12	-	17	15	12	-	17	15	12	-	18	16	13	-
		kW	2.89	2.88	2.88	-	3.21	3.20	3.20	-	3.56	3.56	3.56	-	3.95	3.95	3.94	-	4.38	4.38	4.38	-	4.89	4.89	4.88	-
		Amps	10.3	10.3	10.3	-	11.8	11.7	11.7	-	13.4	13.4	13.4	-	15.2	15.1	15.1	-	17.1	17.1	17.1	-	19.5	19.4	19.4	-
75	1450	MBh	46.9	47.6	49.0	51.1	46.5	47.2	48.5	50.7	45.3	46.0	47.3	49.5	43.2	**43.9**	45.3	47.4	40.7	41.3	42.7	44.8	38.4	39.0	40.4	42.5
		S/T	0.75	0.68	0.55	0.4	0.76	0.68	0.56	0.4	1.00	0.71	0.58	0.4	1.00	**0.73**	0.60	0.5	1.00	0.75	0.62	0.5	1.00	0.80	0.67	0.5
		ΔT	23	21	18	14	23	21	18	14	23	22	18	14	23	**21**	18	14	23	21	17	14	24	22	19	15
		kW	2.86	2.86	2.85	2.9	3.18	3.18	3.17	3.2	3.54	3.53	3.53	3.6	3.92	**3.92**	3.92	3.9	4.36	4.35	4.35	4.4	4.86	4.86	4.86	4.9
		Amps	10.2	10.2	10.1	10.2	11.6	11.6	11.6	11.7	13.3	13.3	13.2	13.3	15.0	**15.0**	15.0	15.1	17.0	17.0	17.0	17.1	19.3	19.3	19.3	19.4
	1600	MBh	47.5	48.2	49.6	51.7	47.1	47.8	49.1	51.3	45.9	46.6	47.9	50.0	43.8	44.5	45.9	48.0	41.3	41.9	43.3	45.4	39.0	39.6	41.0	43.1
		S/T	0.78	0.71	0.58	0.4	0.78	0.71	0.58	0.4	1.00	0.74	0.61	0.5	1.00	0.75	0.63	0.5	1.00	0.77	0.65	0.5	1.00	1.00	0.70	0.6
		ΔT	22	21	17	13	22	20	17	13	23	21	17	14	22	20	17	13	22	20	17	13	23	21	18	14
		kW	2.87	2.87	2.86	2.89	3.19	3.19	3.18	3.21	3.55	3.55	3.54	3.57	3.94	3.93	3.93	3.95	4.37	4.37	4.36	4.38	4.88	4.87	4.87	4.89
		Amps	10.2	10.2	10.2	10.3	11.7	11.7	11.6	11.8	13.3	13.3	13.3	13.4	15.1	15.1	15.1	15.2	17.1	17.1	17.0	17.1	19.4	19.4	19.4	19.5
	1800	MBh	48.5	49.1	50.5	52.6	48.1	48.7	50.1	52.2	46.8	47.5	48.9	51.0	44.8	**45.4**	46.8	48.9	42.2	42.9	44.3	46.4	39.9	40.6	41.9	44.1
		S/T	0.79	0.72	0.59	0.5	0.80	0.73	0.60	0.5	1.00	0.75	0.62	0.5	1.00	**0.77**	0.64	0.5	1.00	0.79	0.66	0.5	1.00	1.00	0.71	0.6
		ΔT	21	20	16	12	21	20	16	12	22	20	16	13	21	**19**	16	12	21	19	16	12	22	20	17	13
		kW	2.88	2.88	2.88	2.9	3.21	3.20	3.20	3.2	3.56	3.56	3.55	3.6	3.95	**3.95**	3.94	4.0	4.38	4.38	4.37	4.4	4.89	4.89	4.88	4.9
		Amps	10.3	10.3	10.2	10.4	11.7	11.7	11.7	11.8	13.4	13.4	13.3	13.5	15.2	**15.1**	15.1	15.2	17.1	17.1	17.1	17.2	19.5	19.4	19.4	19.5

IDB: Entering Indoor Dry Bulb Temperature

Shaded area reflects ACCA (TVA) conditions

kW = Total system power

High and low pressures are measured at the liquid and suction service valves.

Amps = outdoor unit amps (comp.+fan)

Expanded Cooling Data — GLXS5BA4810A*+CAPTA6030*3A* (cont.)

			Outdoor Ambient Temperature																							
			65				75				85				95				105				115			
			Entering Indoor Wet Bulb Temperature																							
IDB	Airflow		59	63	67	71	59	63	67	71	59	63	67	71	59	63	67	71	59	63	67	71	59	63	67	71
80	1450	MBh	47.2	47.8	49.2	51.3	46.8	47.4	48.8	50.9	45.5	46.2	47.6	49.7	43.5	44.1	**45.5**	47.6	40.9	41.6	43.0	45.1	38.6	39.3	40.6	42.8
		S/T	0.87	0.80	0.67	0.5	1.00	0.80	0.67	0.5	1.00	0.83	0.70	0.6	1.00	0.84	**0.72**	0.6	1.00	1.00	0.74	0.6	1.00	1.00	0.79	0.7
		ΔT	27	25	22	18	27	25	22	18	28	26	22	19	27	25	**22**	18	27	25	22	18	28	26	23	19
		kW	2.86	2.86	2.85	2.9	3.18	3.18	3.17	3.2	3.54	3.54	3.53	3.6	3.93	3.92	**3.92**	3.9	4.36	4.36	4.35	4.4	4.87	4.86	4.86	4.9
		Amps	10.2	10.2	10.1	10.2	11.6	11.6	11.6	11.7	13.3	13.3	13.2	13.3	15.0	15.0	**15.0**	15.1	17.0	17.0	17.0	17.1	19.3	19.3	19.3	19.4
	1600	MBh	47.8	48.4	49.8	51.9	47.3	48.0	49.4	51.5	46.1	46.8	48.2	50.3	44.1	44.7	46.1	48.2	41.5	42.2	43.6	45.7	39.2	39.8	41.2	43.3
		S/T	1.00	0.82	0.70	0.6	1.00	0.83	0.70	0.6	1.00	0.85	0.73	0.6	1.00	0.87	0.74	0.6	1.00	1.00	0.77	0.6	1.00	1.00	0.81	0.7
		ΔT	27	25	21	18	26	25	21	17	27	25	21	18	26	25	21	17	26	24	21	17	27	25	22	18
		kW	2.87	2.87	2.86	2.89	3.19	3.19	3.19	3.21	3.55	3.55	3.54	3.57	3.94	3.93	3.93	3.95	4.37	4.37	4.36	4.39	4.88	4.87	4.87	4.89
		Amps	10.2	10.2	10.2	10.3	11.7	11.7	11.7	11.8	13.3	13.3	13.3	13.4	15.1	15.1	15.1	15.2	17.1	17.1	17.0	17.1	19.4	19.4	19.4	19.5
	1800	MBh	48.7	49.4	50.7	52.9	48.3	48.9	50.3	52.4	47.1	47.7	49.1	51.2	45.0	45.7	47.0	49.2	42.5	43.1	44.5	46.6	40.1	40.8	42.2	44.3
		S/T	1.00	0.84	0.71	0.6	1.00	0.84	0.72	0.6	1.00	0.87	0.74	0.6	1.00	1.00	0.76	0.6	1.00	1.00	0.78	0.6	1.00	1.00	0.83	0.7
		ΔT	26	24	20	17	26	24	20	17	26	24	20	17	25	24	20	17	25	23	20	16	26	25	21	17
		kW	2.89	2.88	2.88	2.9	3.21	3.20	3.20	3.2	3.56	3.56	3.56	3.6	3.95	3.95	3.94	4.0	4.38	4.38	4.38	4.4	4.89	4.89	4.88	4.9
		Amps	10.3	10.3	10.2	10.4	11.8	11.7	11.7	11.8	13.4	13.4	13.4	13.5	15.2	15.1	15.1	15.2	17.1	17.1	17.1	17.2	19.5	19.4	19.4	19.5
85	1450	MBh	47.9	48.6	50.0	52.1	47.5	48.2	49.6	51.7	46.3	47.0	48.4	50.5	44.2	**44.9**	46.3	48.4	41.7	42.4	43.7	45.9	39.4	40.0	41.4	43.5
		S/T	1.00	0.89	0.76	0.6	1.00	0.90	0.77	0.6	1.00	1.00	0.79	0.7	1.00	**1.00**	0.81	0.7	1.00	1.00	0.83	0.7	1.00	1.00	1.00	0.7
		ΔT	31	29	26	22	31	29	26	22	31	29	26	22	31	**29**	26	22	31	29	25	22	32	30	26	23
		kW	2.87	2.86	2.86	2.9	3.19	3.18	3.18	3.2	3.55	3.54	3.54	3.6	3.93	**3.93**	3.92	3.9	4.36	4.36	4.36	4.4	4.87	4.87	4.86	4.9
		Amps	10.2	10.2	10.2	10.3	11.7	11.7	11.6	11.7	13.3	13.3	13.3	13.4	15.1	**15.1**	15.0	15.1	17.0	17.0	17.0	17.1	19.4	19.4	19.3	19.4
	1600	MBh	48.5	49.2	50.6	52.7	48.1	48.8	50.2	52.3	46.9	47.6	49.0	51.1	44.8	45.5	46.9	49.0	42.3	42.9	44.3	46.4	40.0	40.6	42.0	44.1
		S/T	1.00	0.92	0.79	0.7	1.00	0.93	0.80	0.7	1.00	1.00	0.82	0.7	1.00	1.00	0.84	0.7	1.00	1.00	0.86	0.7	1.00	1.00	1.00	0.8
		ΔT	30	28	25	21	30	28	25	21	30	29	25	21	30	28	25	21	30	28	25	21	31	29	26	22
		kW	2.88	2.88	2.87	2.90	3.20	3.20	3.19	3.22	3.56	3.55	3.55	3.57	3.94	3.94	3.94	3.96	4.38	4.37	4.37	4.39	4.88	4.88	4.88	4.90
		Amps	10.3	10.2	10.2	10.3	11.7	11.7	11.7	11.8	13.4	13.3	13.3	13.4	15.1	15.1	15.1	15.2	17.1	17.1	17.1	17.2	19.4	19.4	19.4	19.5
	1800	MBh	49.5	50.1	51.5	53.6	49.1	49.7	51.1	53.2	47.9	48.5	49.9	52.0	45.8	**46.4**	47.8	49.9	43.2	43.9	45.3	47.4	40.9	41.6	43.0	45.1
		S/T	1.00	0.93	0.81	0.7	1.00	1.00	0.81	0.7	1.00	1.00	0.84	0.7	1.00	**1.00**	0.85	0.7	1.00	1.00	0.88	0.7	1.00	1.00	1.00	0.8
		ΔT	29	27	24	20	29	27	24	20	29	28	24	20	29	**27**	24	20	29	27	24	20	30	28	25	21
		kW	2.89	2.89	2.88	2.9	3.21	3.21	3.20	3.2	3.57	3.57	3.56	3.6	3.96	**3.95**	3.95	4.0	4.39	4.39	4.38	4.4	4.90	4.89	4.89	4.9
		Amps	10.3	10.3	10.3	10.4	11.8	11.8	11.7	11.9	13.4	13.4	13.4	13.5	15.2	**15.2**	15.2	15.3	17.2	17.2	17.1	17.2	19.5	19.5	19.4	19.6

IDB: Entering Indoor Dry Bulb Temperature

Shaded area reflects AHRI conditions

kW = Total system power

High and low pressures are measured at the liquid and suction service valves.

Amps = outdoor unit amps (comp.+fan)

Expanded Cooling Data — GLXS5BA6010A*+CAPTA6030*3A*

			Outdoor Ambient Temperature																							
			65				75				85				95				105				115			
			Entering Indoor Wet Bulb Temperature																							
IDB	Airflow		59	63	67	71	59	63	67	71	59	63	67	71	59	63	67	71	59	63	67	71	59	63	67	71
70	1485	MBh	58.8	59.6	61.3	-	58.2	59.1	60.8	-	56.7	57.5	59.3	-	54.1	54.9	56.7	-	50.9	51.7	53.5	-	48.0	48.8	50.6	-
		S/T	0.59	0.52	0.40	-	0.59	0.53	0.41	-	0.62	0.55	0.43	-	0.63	0.57	0.45	-	0.65	0.59	0.47	-	1.00	0.63	0.51	-
		ΔT	22	20	16	-	22	20	16	-	23	20	16	-	22	20	16	-	22	20	16	-	23	21	17	-
		kW	3.52	3.52	3.51	-	3.94	3.94	3.93	-	4.41	4.41	4.40	-	4.92	4.92	4.91	-	5.49	5.48	5.48	-	6.15	6.15	6.14	-
		Amps	13.1	13.1	13.1	-	15.0	15.0	15.0	-	17.2	17.2	17.1	-	19.5	19.5	19.4	-	22.1	22.1	22.0	-	25.1	25.1	25.1	-
	2000	MBh	61.8	62.6	64.3	-	61.2	62.1	63.8	-	59.7	60.5	62.3	-	57.1	57.9	59.7	-	53.9	54.8	56.5	-	51.0	51.9	53.6	-
		S/T	0.62	0.56	0.44	-	0.63	0.56	0.44	-	0.65	0.58	0.46	-	0.67	0.60	0.48	-	1.00	0.62	0.50	-	1.00	0.67	0.55	-
		ΔT	20	17	13	-	19	17	13	-	20	18	14	-	19	17	13	-	19	17	13	-	21	18	14	-
		kW	3.57	3.57	3.56	-	3.99	3.99	3.98	-	4.46	4.46	4.45	-	4.97	4.96	4.96	-	5.53	5.53	5.52	-	6.20	6.19	6.19	-
		Amps	13.3	13.3	13.3	-	15.2	15.2	15.2	-	17.4	17.4	17.3	-	19.7	19.7	19.7	-	22.3	22.3	22.3	-	25.3	25.3	25.3	-
	2250	MBh	63.8	64.7	66.4	-	63.3	64.1	65.9	-	61.8	62.6	64.4	-	59.2	60.0	61.7	-	56.0	56.8	58.6	-	53.1	53.9	55.7	-
		S/T	0.59	0.52	0.40	-	0.60	0.53	0.41	-	0.62	0.55	0.43	-	1.00	0.57	0.45	-	1.00	0.59	0.47	-	1.00	0.63	0.51	-
		ΔT	18	16	12	-	18	16	12	-	19	16	12	-	18	16	12	-	18	16	12	-	19	17	13	-
		kW	3.59	3.59	3.58	-	4.01	4.01	4.00	-	4.48	4.48	4.47	-	4.99	4.98	4.98	-	5.55	5.55	5.54	-	6.22	6.21	6.21	-
		Amps	13.4	13.4	13.4	-	15.3	15.3	15.3	-	17.5	17.5	17.4	-	19.8	19.8	19.7	-	22.4	22.4	22.3	-	25.4	25.4	25.4	-
75	1485	MBh	58.8	59.6	61.3	64.0	58.3	59.1	60.8	63.5	56.8	57.6	59.3	62.0	54.1	**55.0**	56.7	59.3	51.0	51.8	53.5	56.2	48.1	48.9	50.6	53.3
		S/T	0.70	0.64	0.52	0.4	0.71	0.64	0.52	0.4	0.73	0.66	0.54	0.4	1.00	**0.68**	0.56	0.4	1.00	0.70	0.58	0.5	1.00	0.75	0.63	0.5
		ΔT	27	25	21	17	27	25	21	17	27	25	21	17	27	**25**	21	17	27	25	21	16	28	26	22	18
		kW	3.52	3.52	3.51	3.5	3.94	3.94	3.93	4.0	4.41	4.41	4.40	4.4	4.92	**4.91**	4.91	4.9	5.48	5.48	5.47	5.5	6.15	6.15	6.14	6.2
		Amps	13.1	13.1	13.0	13.2	15.0	15.0	15.0	15.1	17.2	17.1	17.1	17.3	19.5	**19.5**	19.4	19.6	22.1	22.1	22.0	22.2	25.1	25.1	25.1	25.2
	2000	MBh	61.8	62.6	64.3	67.0	61.3	62.1	63.8	66.5	59.8	60.6	62.3	65.0	57.2	58.0	59.7	62.4	54.0	54.8	56.5	59.2	51.1	51.9	53.6	56.3
		S/T	0.74	0.67	0.55	0.4	0.74	0.68	0.56	0.4	1.00	0.70	0.58	0.5	1.00	0.72	0.60	0.5	1.00	0.74	0.62	0.5	1.00	0.78	0.66	0.5
		ΔT	24	22	18	14	24	22	18	14	25	22	18	14	24	22	18	14	24	22	18	13	25	23	19	15
		kW	3.57	3.56	3.56	3.59	3.99	3.98	3.98	4.01	4.46	4.45	4.45	4.48	4.96	4.96	4.95	4.99	5.53	5.53	5.52	5.55	6.20	6.19	6.19	6.22
		Amps	13.3	13.3	13.3	13.4	15.2	15.2	15.2	15.3	17.4	17.4	17.3	17.5	19.7	19.7	19.6	19.8	22.3	22.3	22.2	22.4	25.3	25.3	25.3	25.4
	2250	MBh	63.9	64.7	66.4	69.1	63.3	64.2	65.9	68.5	61.8	62.7	64.4	67.0	59.2	60.0	61.8	64.4	56.0	56.9	58.6	61.2	53.1	54.0	55.7	58.3
		S/T	0.70	0.64	0.52	0.4	0.71	0.64	0.52	0.4	1.00	0.66	0.54	0.4	1.00	0.68	0.56	0.4	1.00	0.70	0.58	0.5	1.00	1.00	0.63	0.5
		ΔT	23	21	17	13	23	21	17	13	23	21	17	13	23	21	17	13	23	21	17	12	24	22	18	14
		kW	3.59	3.58	3.58	3.6	4.01	4.00	4.00	4.0	4.48	4.47	4.47	4.5	4.98	4.98	4.97	5.0	5.55	5.55	5.54	5.6	6.21	6.21	6.20	6.2
		Amps	13.4	13.4	13.3	13.5	15.3	15.3	15.3	15.4	17.5	17.4	17.4	17.6	19.8	19.8	19.7	19.9	22.4	22.4	22.3	22.5	25.4	25.4	25.4	25.5

IDB: Entering Indoor Dry Bulb Temperature

Shaded area reflects ACCA (TVA) conditions

kW = Total system power

High and low pressures are measured at the liquid and suction service valves.

Amps = outdoor unit amps (comp.+fan)

Expanded Cooling Data — GLXS5BA6010A+CAPTA6030*3A* (cont.)*

			Outdoor Ambient Temperature																							
			65				75				85				95				105				115			
			Entering Indoor Wet Bulb Temperature																							
IDB	Airflow		59	63	67	71	59	63	67	71	59	63	67	71	59	63	67	71	59	63	67	71	59	63	67	71
80	1485	MBh	59.1	59.9	61.6	64.3	58.6	59.4	61.1	63.8	57.1	57.9	59.6	62.3	54.4	55.3	**57.0**	59.6	51.3	52.1	53.8	56.5	48.4	49.2	50.9	53.6
		S/T	0.81	0.75	0.63	0.5	1.00	0.75	0.63	0.5	1.00	0.77	0.65	0.5	1.00	0.79	**0.67**	0.5	1.00	0.81	0.69	0.6	1.00	1.00	0.74	0.6
		ΔT	32	30	26	21	32	30	26	21	32	30	26	22	32	30	**26**	21	32	29	25	21	33	31	27	22
		kW	3.52	3.52	3.51	3.5	3.94	3.94	3.93	4.0	4.41	4.41	4.40	4.4	4.92	4.92	**4.91**	4.9	5.49	5.48	5.48	5.5	6.15	6.15	6.14	6.2
		Amps	13.1	13.1	13.1	13.2	15.0	15.0	15.0	15.1	17.2	17.2	17.1	17.3	19.5	19.5	**19.4**	19.6	22.1	22.1	22.0	22.2	25.1	25.1	25.1	25.2
	2000	MBh	62.1	62.9	64.6	67.3	61.6	62.4	64.1	66.8	60.1	60.9	62.6	65.3	57.5	58.3	60.0	62.7	54.3	55.1	56.8	59.5	51.4	52.2	53.9	56.6
		S/T	0.85	0.78	0.66	0.5	1.00	0.79	0.67	0.5	1.00	0.81	0.69	0.6	1.00	0.83	0.71	0.6	1.00	1.00	0.73	0.6	1.00	1.00	0.77	0.6
		ΔT	29	27	23	19	29	27	23	19	29	27	23	19	29	27	23	19	29	27	23	18	30	28	24	20
		kW	3.57	3.57	3.56	3.59	3.99	3.99	3.98	4.01	4.46	4.46	4.45	4.48	4.97	4.96	4.96	4.99	5.53	5.53	5.52	5.55	6.20	6.19	6.19	6.22
		Amps	13.3	13.3	13.3	13.4	15.2	15.2	15.2	15.3	17.4	17.4	17.3	17.5	19.7	19.7	19.7	19.8	22.3	22.3	22.2	22.4	25.3	25.3	25.3	25.4
	2250	MBh	64.2	65.0	66.7	69.4	63.6	64.5	66.2	68.8	62.1	63.0	64.7	67.3	59.5	60.3	62.1	64.7	56.3	57.2	58.9	61.5	53.4	54.3	56.0	58.6
		S/T	1.00	0.75	0.63	0.5	1.00	0.75	0.63	0.5	1.00	0.78	0.66	0.5	1.00	0.79	0.67	0.5	1.00	1.00	0.69	0.6	1.00	1.00	0.74	0.6
		ΔT	28	26	22	17	28	26	22	17	28	26	22	18	28	26	22	17	28	25	21	17	29	27	23	18
		kW	3.59	3.59	3.58	3.6	4.01	4.01	4.00	4.0	4.48	4.47	4.47	4.5	4.99	4.98	4.97	5.0	5.55	5.55	5.54	5.6	6.22	6.21	6.21	6.2
		Amps	13.4	13.4	13.4	13.5	15.3	15.3	15.3	15.4	17.5	17.5	17.4	17.6	19.8	19.8	19.7	19.9	22.4	22.4	22.3	22.5	25.4	25.4	25.4	25.5
85	1485	MBh	60.1	60.9	62.6	65.3	59.5	60.4	62.1	64.7	58.0	58.8	60.6	63.2	55.4	**56.2**	58.0	60.6	52.2	53.1	54.8	57.4	49.3	50.2	51.9	54.5
		S/T	1.00	0.84	0.72	0.6	1.00	0.84	0.72	0.6	1.00	0.86	0.74	0.6	1.00	**1.00**	0.76	0.6	1.00	1.00	0.78	0.7	1.00	1.00	0.83	0.7
		ΔT	36	34	30	26	36	34	30	26	37	34	30	26	36	**34**	30	26	36	34	30	25	37	35	31	27
		kW	3.53	3.53	3.52	3.6	3.95	3.95	3.94	4.0	4.42	4.42	4.41	4.4	4.93	**4.92**	4.92	4.9	5.49	5.49	5.48	5.5	6.16	6.16	6.15	6.2
		Amps	13.1	13.1	13.1	13.2	15.1	15.0	15.0	15.2	17.2	17.2	17.2	17.3	19.5	**19.5**	19.5	19.6	22.1	22.1	22.1	22.2	25.2	25.2	25.1	25.3
	2000	MBh	63.1	63.9	65.6	68.3	62.6	63.4	65.1	67.8	61.0	61.9	63.6	66.2	58.4	59.3	61.0	63.6	55.3	56.1	57.8	60.4	52.3	53.2	54.9	57.5
		S/T	1.00	0.87	0.75	0.6	1.00	0.88	0.76	0.6	1.00	1.00	0.78	0.7	1.00	1.00	0.80	0.7	1.00	1.00	0.82	0.7	1.00	1.00	0.86	0.7
		ΔT	33	31	27	23	33	31	27	23	34	32	27	23	33	31	27	23	33	31	27	23	34	32	28	24
		kW	3.58	3.58	3.57	3.60	4.00	3.99	3.99	4.02	4.47	4.46	4.46	4.49	4.97	4.97	4.96	5.00	5.54	5.54	5.53	5.56	6.21	6.20	6.20	6.23
		Amps	13.4	13.3	13.3	13.5	15.3	15.3	15.2	15.4	17.4	17.4	17.4	17.5	19.7	19.7	19.7	19.8	22.3	22.3	22.3	22.4	25.4	25.4	25.3	25.5
	2250	MBh	65.1	66.0	67.7	70.3	64.6	65.4	67.2	69.8	63.1	63.9	65.7	68.3	60.5	**61.3**	63.1	65.7	57.3	58.1	59.9	62.5	54.4	55.2	57.0	59.6
		S/T	1.00	0.84	0.72	0.6	1.00	1.00	0.72	0.6	1.00	1.00	0.74	0.6	1.00	**1.00**	0.76	0.6	1.00	1.00	0.78	0.7	1.00	1.00	1.00	0.7
		ΔT	32	30	26	22	32	30	26	22	33	30	26	22	32	**30**	26	22	32	30	26	21	33	31	27	23
		kW	3.60	3.59	3.59	3.6	4.02	4.01	4.01	4.0	4.49	4.48	4.48	4.5	4.99	**4.99**	4.98	5.0	5.56	5.56	5.55	5.6	6.23	6.22	6.21	6.2
		Amps	13.4	13.4	13.4	13.5	15.4	15.3	15.3	15.5	17.5	17.5	17.5	17.6	19.8	**19.8**	19.8	19.9	22.4	22.4	22.4	22.5	25.5	25.4	25.4	25.6

IDB: Entering Indoor Dry Bulb Temperature

Shaded area reflects AHRI conditions

kW = Total system power

High and low pressures are measured at the liquid and suction service valves.

Amps = outdoor unit amps (comp.+fan)

GLXS5BA1810A*+CAPTA1818*3A* Conditions: 80 °F IBD, 67 °F IWB @ 525 CFM				
Outdoor Tem. ° F.	Total BTU/h	Sensible BTU/h	Latent BTU/h	Total Watts
75	18,870	12,590	6,280	1,230
80	18,635	12,650	5,985	1,300
85	18,400	12,710	5,690	1,370
90	18,000	12,590	5,410	1,445
95	**17,600**	**12,470**	**5,130**	**1,520**
100	17,110	12,295	4,815	1,600
105	16,620	12,120	4,500	1,680
110	16,170	12,170	4,000	1,775
115	15,720	12,220	3,500	1,870
TVA Conditions @ 95° OD DB, 75° ID DB 63° ID WB				
95°	**16,970**	**12,190**	**4,780**	**1,520**

GLXS5BA2410A*+CAPTA2422*3A* Conditions: 80 °F IBD, 67 °F IWB @ 700 CFM				
Outdoor Tem. ° F.	Total BTU/h	Sensible BTU/h	Latent BTU/h	Total Watts
75	25,310	17,050	8,260	1,650
80	24,995	17,130	7,865	1,740
85	24,680	17,210	7,470	1,830
90	24,140	17,050	7,090	1,930
95	**23,600**	**16,890**	**6,710**	**2,030**
100	22,940	16,650	6,290	2,140
105	22,280	16,410	5,870	2,250
110	21,680	16,480	5,200	2,385
115	21,080	16,550	4,530	2,520
TVA Conditions @ 95° OD DB, 75° ID DB 63° ID WB				
95°	**22,760**	**16,510**	**6,250**	**2,030**

GLXS5BA3010A*+CAPTA3026*3A* Conditions: 80 °F IBD, 67 °F IWB @ 900 CFM				
Outdoor Tem. ° F.	Total BTU/h	Sensible BTU/h	Latent BTU/h	Total Watts
75	30,670	21,080	9,590	2,000
80	30,290	21,180	9,110	2,110
85	29,910	21,280	8,630	2,220
90	29,255	21,085	8,170	2,340
95	**28,600**	**20,890**	**7,710**	**2,460**
100	27,800	20,590	7,210	2,595
105	27,000	20,290	6,710	2,730
110	26,270	20,375	5,895	2,885
115	25,540	20,460	5,080	3,040
TVA Conditions @ 95° OD DB, 75° ID DB 63° ID WB				
95°	**27,580**	**20,410**	**7,170**	**2,460**

GLXS5BA3610A*+CAPTA3626*3A* Conditions: 80 °F IBD, 67 °F IWB @ 1180 CFM				
Outdoor Tem. ° F.	Total BTU/h	Sensible BTU/h	Latent BTU/h	Total Watts
75	37,100	26,520	10,580	2,430
80	36,640	26,645	9,995	2,560
85	36,180	26,770	9,410	2,690
90	35,390	26,520	8,870	2,835
95	**34,600**	**26,270**	**8,330**	**2,980**
100	33,635	25,895	7,740	3,140
105	32,670	25,520	7,150	3,300
110	31,785	25,630	6,155	3,490
115	30,900	25,740	5,160	3,680
TVA Conditions @ 95° OD DB, 75° ID DB 63° ID WB				
95°	**33,370**	**25,670**	**7,700**	**2,980**

GLXS5BA4210A*+CAPTA4230*3A* Conditions: 80 °F IBD, 67 °F IWB @ 1400 CFM				
Outdoor Tem. ° F.	Total BTU/h	Sensible BTU/h	Latent BTU/h	Total Watts
75	42,890	30,740	12,150	2,810
80	42,360	30,885	11,475	2,960
85	41,830	31,030	10,800	3,110
90	40,915	30,740	10,175	3,275
95	**40,000**	**30,450**	**9,550**	**3,440**
100	38,885	30,020	8,865	3,625
105	37,770	29,590	8,180	3,810
110	36,750	29,710	7,040	4,025
115	35,730	29,830	5,900	4,240
TVA Conditions @ 95° OD DB, 75° ID DB 63° ID WB				
95°	**38,570**	**29,760**	**8,810**	**3,450**

GLXS5BA4810A*+CAPTA6030*3A* Conditions: 80 °F IBD, 67 °F IWB @ 1450 CFM				
Outdoor Tem. ° F.	Total BTU/h	Sensible BTU/h	Latent BTU/h	Total Watts
75	48,790	32,900	15,890	3,170
80	48,185	33,055	15,130	3,350
85	47,580	33,210	14,370	3,530
90	46,540	32,900	13,640	3,725
95	**45,500**	**32,590**	**12,910**	**3,920**
100	44,230	32,125	12,105	4,135
105	42,960	31,660	11,300	4,350
110	41,800	31,795	10,005	4,605
115	40,640	31,930	8,710	4,860
TVA Conditions @ 95° OD DB, 75° ID DB 63° ID WB				
95°	**43,880**	**31,850**	**12,030**	**3,920**

GLXS5BA6010A*+CAPTA6030*3A* Conditions: 80 °F IBD, 67 °F IWB @ 1485 CFM				
Outdoor Tem. ° F.	Total BTU/h	Sensible BTU/h	Latent BTU/h	Total Watts
75	61,120	38,650	22,470	3,930
80	60,360	38,830	21,530	4,165
85	59,600	39,010	20,590	4,400
90	58,300	38,650	19,650	4,655
95	**57,000**	**38,290**	**18,710**	**4,910**
100	55,410	37,745	17,665	5,195
105	53,820	37,200	16,620	5,480
110	52,365	37,355	15,010	5,810
115	50,910	37,510	13,400	6,140
TVA Conditions @ 95° OD DB, 75° ID DB 63° ID WB				
95°	**54,970**	**37,420**	**17,550**	**4,910**

Model	Dimensions		
	W"	D"	H"
GLXS5BA1810A*	26	26	27
GLXS5BA2410A*	29	29	32
GLXS5BA3010A*	35½	35½	39½
GLXS5BA3610A*	35½	35½	39½
GLXS5BA4210A*	35½	35½	36½
GLXS5BA4810A*	35½	35½	36½
GLXS5BA6010A*	35½	35½	41⅝

*Note: All the Dimensions (W, D, H) are for reference only.

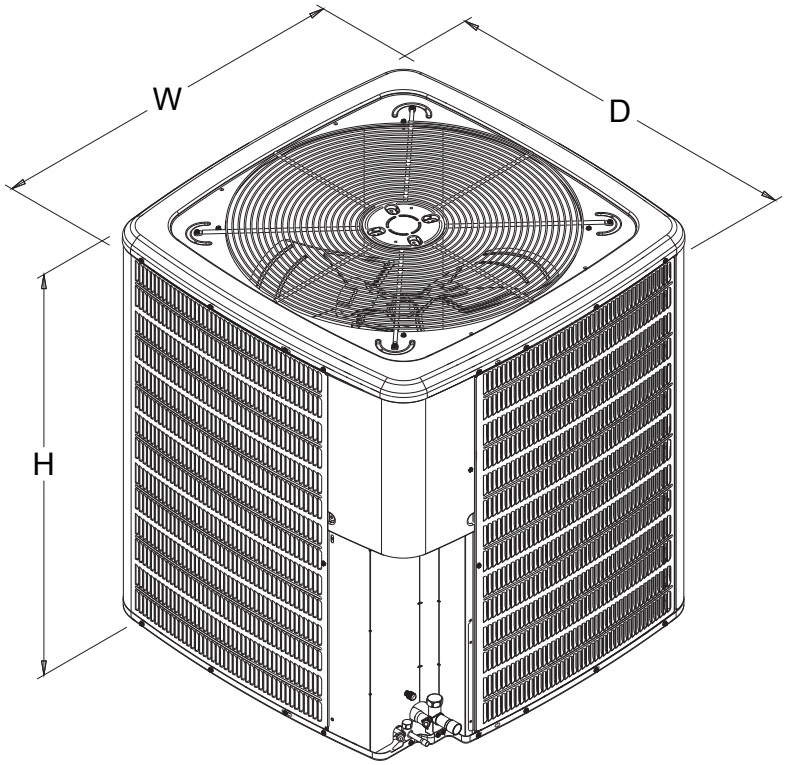

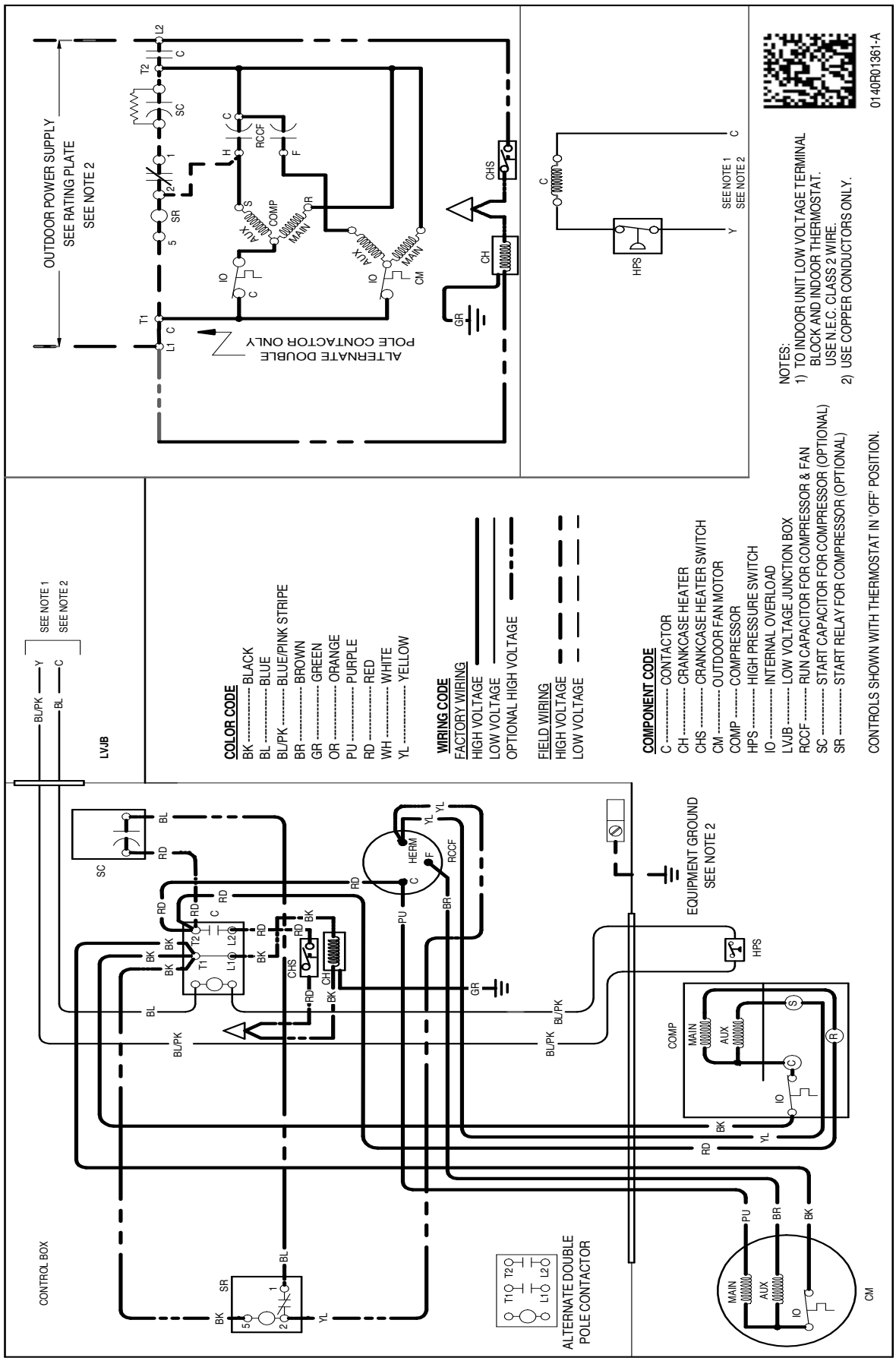

WARNING

High Voltage: Disconnect all power before servicing or installing this unit. Multiple power sources may be present. Failure to do so may cause property damage, personal injury, or death.

Wiring is subject to change. Always refer to the wiring diagram or the unit for the most up-to-date wiring.

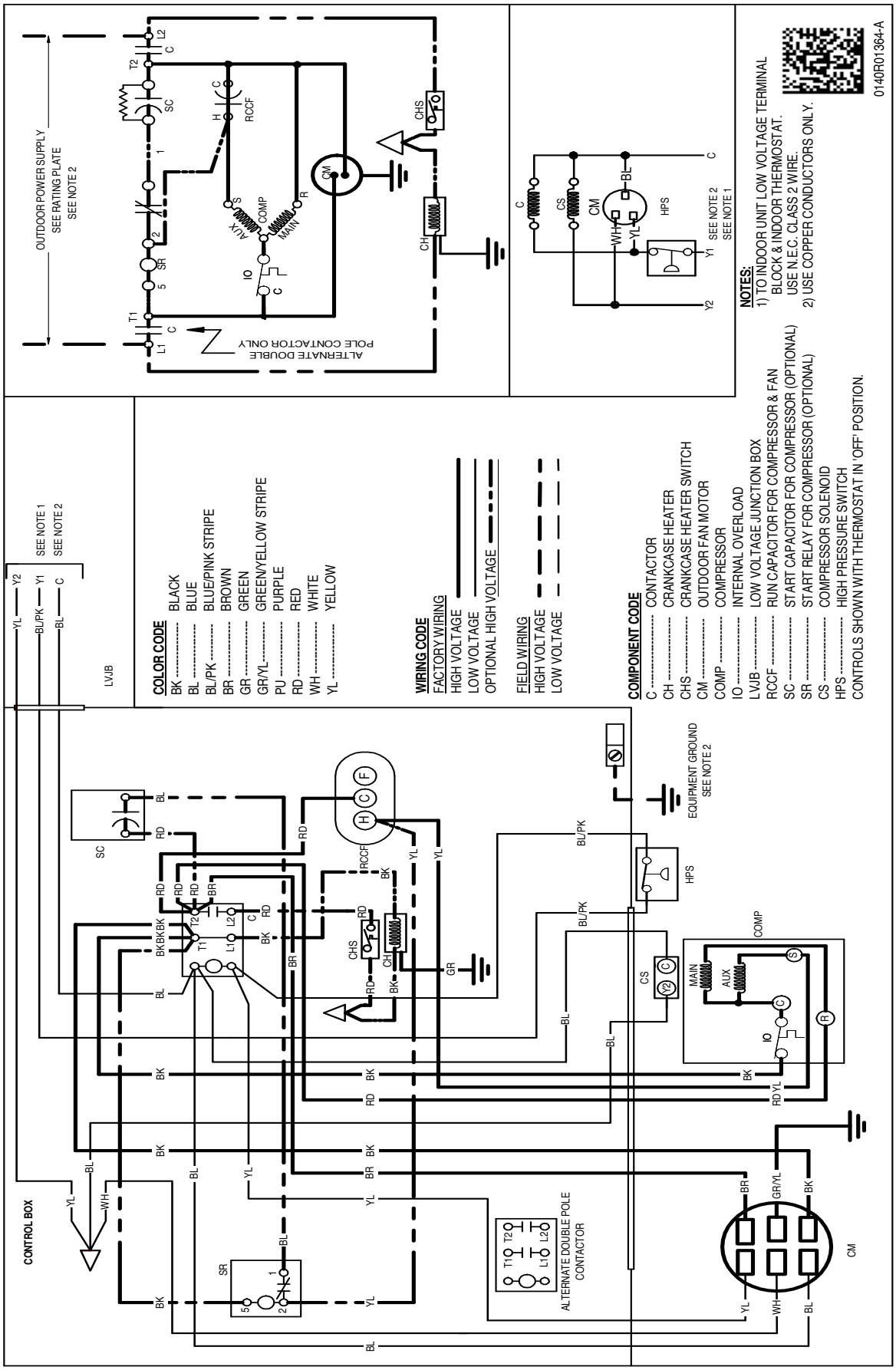

WARNING — **High Voltage:** Disconnect all power before servicing or installing this unit. Multiple power sources may be present. Failure to do so may cause property damage, personal injury, or death.

Wiring is subject to change. Always refer to the wiring diagram or the unit for the most up-to-date wiring.

MODEL	DESCRIPTION	GLXS5B A1810A*	GLXS5B A2410A*	GLXS5B A3010A*	GLXS5B A3610A*	GLXS5B A4210A*	GLXS5B A4810A*	GLXS5B A6010A*
016R00128	Neutral Circular Cap	X	X	X	X	X	X	
ABK-20	Anchor Bracket Kit ^	X	X	X	X	X	X	X
ASC01A	Anti-Short Cycle Kit	X	X	X	X	X	X	X
CSR-U-1	Hard-start Kit	X	X	X	X	X	X	X
Factory Installed Crank Case Heater						X	X	X
0163R00006	Crank Case Heater	X	X	X	X			
0130M00106	CCH Temp Switch	X	X	X	X			
FSK01A[1]	Freeze Protection Kit	X	X	X	X	X	X	X
LSK02A[2]	Liquid Line Solenoid Kit	X	X	X	X	X	X	X
LAKT01	Low-Ambient Kit	X	X	X	X	X	X	
0130R00000S	Low-Pressure Switch Kit	X	X	X	X	X	X	X

^ Contains 20 brackets; four brackets needed to anchor unit to pad

[1] Installed on indoor coil

[2] Condensing units and heat pumps with reciprocating or rotary compressors require the use of start-assist components when used in conjunction with an indoor coil using a non-bleed thermal expansion valve refrigerant metering device or liquid line solenoid kit. The TXV should always be sized based on the tonnage of the outdoor unit.

All AHRI system ratings are accessible in the System Configurator tool via PartnerLink.

Our continuing commitment to quality products may mean a change in specifications without notice.
©2026 DAIKIN COMFORT TECHNOLOGIES MANUFACTURING, INC. • Houston, Texas • Printed in the USA.