INSTALLATION INSTRUCTIONS

OUTDOOR UNIT

GXV6S***1*A*/GZV6S***1*A*/GXV9SA[24-48]10A*/ GZV7SA[24-48]10A* OUTDOOR UNIT INSTALLATION & SERVICE REFERENCE



Index

Important Safety Instructions 1
Shipping Inspection 2
Codes & Regulations 2
Features 2
Accessories 2
Before Installation 3
Precautions for Selecting a Location 3
Precautions for Installation 4
Installation Clearances 5
Cold Climate Outdoor Unit Operation Location 10
Rooftop Installations 10
Electrical Noise 10
Safety Considerations 11
Meanings of Symbols 11
Safe Refrigerant Handling 13
Safety Checks to Refrigerant Equipment 13
Refrigerant Lines 14
Refrigerant Line Connections 18
Leak Testing (Nitrogen) 19
System Evacuation 20
System Start-up Procedure 20
Stop Valve Operation Method 21
Electrical Connections 22
System Service and Decommissioning 26
Step 1. Calculate Refrigerant Charge Based on Line Set Length 27
Step 2. Charge by Lineset Length 30
Step 3. System Start-up Test 30
Additional Charge Adjusting Procedure 30
Step 4. Measure Subcooling to Verify Proper Charge 30
System Operation 31
Electronic Leak Detector 34
Wiring Diagram 35
Testing Capacitor Resistance 41
Troubleshooting 43
Setting The Mode Display 48
7-Segment Display 54
Outdoor Unit Homeowner's Routine Maintenance Recommendations 57
Start Up Checklist 58

Important Safety Instructions

	Read the precautions in this manual carefully before operating the unit.
Refrigerant Safety Group A2L	**This appliance is filled with R32.**

The following symbols and labels are used throughout this manual to indicate immediate or potential safety hazards. It is the owner's and installer's responsibility to read and comply with all safety information and instructions accompanying these symbols. Failure to heed safety information increases the risk of personal injury, property damage, and/or product damage. Also see "Meanings of Symbols" on page 11.

⚠ WARNING

HIGH VOLTAGE !



Disconnect ALL power before servicing. Multiple power sources may be present. Failure to do so may cause property damage, personal injury or death.

⚠ WARNING

Only personnel that have been trained to install, adjust, service, maintenance or repair (hereinafter, "service") the equipment specified in this manual should service the equipment. This equipment is not intended for use by persons (including children) with reduced physical, sensory or mental capabilities, or lack of experience and knowledge, unless they have been given supervision or instruction concerning use of the appliance by a person responsible for their safety. Children should be supervised to ensure that they do not play with the equipment. The manufacturer will not be responsible for any injury or property damage arising from improper supervision, service or service procedures. If you service this unit, you assume responsibility for any injury or property damage which may result. In addition, in jurisdictions that require one or more licenses to service the equipment specified in this manual, only licensed personnel should service the equipment. Improper supervision, installation, adjustment, servicing, maintenance or repair of the equipment specified in this manual, or attempting to install, adjust, service or repair the equipment specified in this manual without proper supervision or training may result in product damage, property damage, personal injury or death.

⚠ WARNING

Do not bypass safety devices.

19001 Kermier Rd. Waller, Tx 77484
www.goodmanmfg.com

© 2022, 2024 Daikin Comfort Technologies Manufacturing, L.P.

3P761829-3B

01_EN_DNA_FIT_Goodman.indd 1 2024/07/04 9:56:46

⚠ CAUTION

DO NOT WASH THE OUTDOOR UNIT WITH EXCESSIVE WATER. AN ELECTRIC SHOCK OR FIRE COULD RESULT.

SHIPPING INSPECTION

Always keep the unit upright; laying the unit on its side or top may cause equipment damage. Shipping damage, and subsequent investigation is the responsibility of the carrier. Verify the model number, specifications, electrical characteristics, and accessories are correct prior to installation. The distributor or manufacturer will not accept claims from dealers for transportation damage or installation of incorrectly shipped units.

CODES & REGULATIONS

This product is designed and manufactured to comply with national codes. Installation in accordance with such codes and/or prevailing local codes/regulations is the responsibility of the installer. The manufacturer assumes no responsibility for equipment installed in violation of any codes or regulations. Rated performance is achieved after 20 hours of operation. Rated performance is delivered at the specified airflow. See outdoor unit specification sheet for split system models or product specification sheet for packaged and light commercial models. Specification sheets can be found at www.goodmanmfg.com for Goodman products. Within the website, please select the products menu and then select the submenu for the type of product to be installed, such as air conditioners or heat pumps, to access a list of product pages that each contain links to that model's specification sheet.

The United States Environmental Protection Agency (EPA) has issued various regulations regarding the introduction and disposal of refrigerants. Failure to follow these regulations may harm the environment and can lead to the imposition of substantial fines.
Should you have any questions please contact our local EPA office.

If replacing one of the component of the system, the system must be manufacturer approved and Air Conditioning, Heating and Refrigeration Institute (AHRI) matched.

NOTE: The installation of an inverter outdoor unit with unmatched system units will not allow for proper operation. This outdoor unit is a PARTIAL UNIT AIR CONDITIONER, complying with PARTIAL UNIT requirements of this Standard, and must only be connected to other units that have been confirmed as complying to corresponding PARTIAL UNIT requirements of this Standard, UL 60335-2-40/CSA C22.2 No. 60335-2-40, or UL 1995/CSA C22.2 No 236.

NOTICE

INVERTER OUTDOOR UNIT MODELS CAN ONLY BE MATCHED WITH R32 EEV EQUIPPED INDOOR UNIT.

Review serial plate on both evaporator and condenser unit to assure the maximum operating pressure matches before connecting.

Outdoor inverter units are approved for operation above 0°F in cooling mode and -10°F (RH10%) in heating mode with no additional kit necessary.

Damage resulting from operation of the unit in a structure that is not complete (either as part of new construction or renovation) is not covered by our warranties.

FEATURES

This outdoor unit is part of a system that uses inverter technology to more efficiently remove or add heat and achieve the target comfort conditions. System may ONLY be installed using a Goodman approved communicating thermostat. The Communicating system reduces the number of required thermostat wires, provides additional setup features and enhanced active diagnostics.

NOTICE

ONLY USE GOODMAN APPROVED COMMUNICATING THERMOSTATS.

ACCESSORIES

Name	Installation manual	Warranty card	Insulation tube (clear)
Shape			
1.5 - 3.0 ton (GXV6S*/GZV6S* 18/24/30/361*)	1	1	
3.5 - 5.0 ton (GXV6S*/GZV6S* 42/48/601*)	1	1	2

Name	Installation manual	Warranty card	Insulation tube (clear)
Shape			
2.0 ton (GXV9SA/ GZV7SA2410)	1	1	
3.0 - 4.0 ton (GXV9SA36/4810/ GZV7SA36/42/4810)	1	1	2

01_EN_DNA_FIT_Goodman.indd 2 2024/07/04 9:56:47

Name	Conduit plate	Clamp	Filter Dryer
Shape	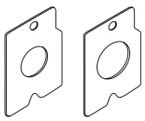 (Φ22.2) (Φ28.6)		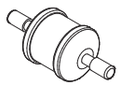
1.5 - 3.0 ton (GXV6S*/GZV6S* 18/24/30/361*)		1	1
3.5 - 5.0 ton (GXV6S*/GZV6S* 42/48/601*)	1 set	1	1

Name	Conduit plate	Clamp	Filter Dryer
Shape	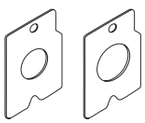 (Φ22.2) (Φ28.6)		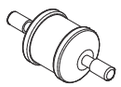
2.0 ton (GXV9SA/ GZV7SA2410)		1	1
3.0 - 4.0 ton (GXV9SA36/4810/ GZV7SA36/42/4810)	1 set	1	1

BEFORE INSTALLATION

Precautions to remove packaging (Corner guard)
<3.5 - 5.0 ton model and 3.0 - 4.0 ton Enhanced Capacity/ High Efficiency model only>

- Remove the packaging (Corner guard) used to protect the unit while carrying from the right front part.
  Follow the steps below to remove.
  1. Remove the front plate screw.
  2. Remove the packaging (Corner guard).
  3. Install the front plate screw to fix the front and top plates.

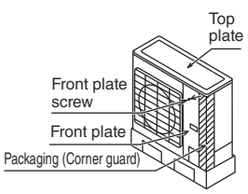

About carrying

Hold the handles as shown in the figure below and move it slowly.
(Pay attention not to touch the fins at the back.)

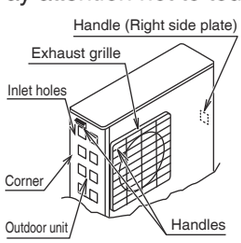

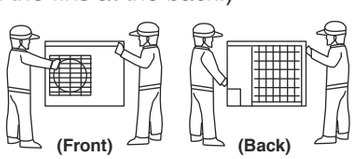

<1.5 - 3.0 ton model and 2.0 ton Enhanced Capacity/High Efficiency model only>

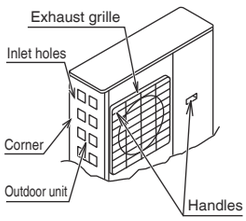

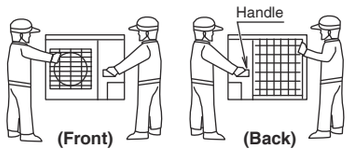

<3.5 - 5.0 ton model and 3.0 - 4.0 ton Enhanced Capacity/High Efficiency model only>

NOTE: Don't place your fingers into the inlet holes of the casing while moving the unit. Failure to do so may result in deformation. Only hold the corner of the unit with your hands.

PRECAUTIONS FOR SELECTING A LOCATION

1. Choose a place solid enough to bear the weight and vibration of the unit, where the operating sound will not be amplified.
2. Choose a location where the hot air discharged from the unit or the operating sound will not cause a nuisance to the neighbors of the user.
3. Avoid places near a bedroom and the like, so that the operating sound will cause no trouble.
4. There must be sufficient spaces for carrying the unit into and out of the site.
5. There must be sufficient space for air passage and no obstructions around the air inlet and the air outlet.
6. The site must be free from the possibility of flammable gas leakage in a nearby place.
7. Do not install the outdoor unit in the following locations:
   (a) Where a mineral oil mist or oil spray or vapor is produced, for example, in a kitchen.
   Plastic parts may deteriorate and fall off and thus may result in water leakage.
   (b) Where corrosive gas, such as sulfurous acid gas, is produced.
   Corroding copper pipes or soldered parts may result in refrigerant leakage.
   (c) Near machinery emitting electromagnetic waves.
   Electromagnetic waves may disturb the operation of the control system and cause the unit to malfunction.
   (d) Where flammable gas may leak, where there is carbon fiber, or ignitable dust suspension in the air, or where volatile flammables such as thinner or gasoline are handled.
   Operating the unit in such conditions may result in a fire.
8. The appliance shall be so as to prevent mechanical damage from occurring.

01_EN_DNA_FIT_Goodman.indd 3 2024/06/19 20:30:11

PRECAUTIONS FOR INSTALLATION

- Check the strength and level of the installation ground so that the unit will not cause any operating vibration or noise after installed.
- Fix the unit securely by means of the foundation bolts. (Prepare 4 sets of foundation bolts (1.5 - 3.0 ton model and 2.0 ton Enhanced Capacity/High Efficiency model: 3/8" or 7/16", 3.5 - 5.0 ton model and 3.0 - 4.0 ton Enhanced Capacity/High Efficiency model only: 1/2"), nuts and washers; all separately available.)
- It is best to screw in the foundation bolts until their ends are 1 inch from the foundation surface.

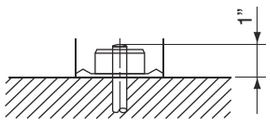

⟨⟨Drain treatment⟩⟩

- In a location where drain from the outdoor unit may cause troubles (for example, where drainage may splash on general passersby), perform the drain piping work using the drain plug (optional).
- For drain treatment, space of at least 4 in. is required under the bottom frame of the outdoor unit.
- In case of installing the outdoor unit in cold climates, do not take this centralized drainage way. Otherwise, drain pipe freeze-up and ice build-up on the bottom frame way occur.

Storage and Transportation

Units come factory charged with refrigerant. Take care to store unit in a location that will minimize potential for damage. The unit should be stored away from continuously operating sources off ignition. If transporting the unit, ensure relevant regulations of the geographic area are followed.

⚠ WARNING

DO NOT USE MEANS TO ACCELERATE THE DEFROSTING PROCESS OR TO CLEAN, OTHER THAN THOSE RECOMMENDED BY MANUFACTURER.
THE APPLIANCE SHALL BE STORED IN A ROOM WITHOUT CONTINUOUSLY OPERATING IGNITION SOURCES (FOR EXAMPLE: OPEN FLAMES, AN OPERATING GAS APPLIANCE OR AN OPERATING ELECTRIC HEATER).
DO NOT PIERCE OR BURN.
BE AWARE THAT REFRIGERANTS MAY NOT CONTAIN AN ODOR.

Altitude adjustment factor to calculate minimum room area

The Indoor equipment mitigation requirements are calculated at sea level. For higher altitudes adjust the minimum room area specified on the Serial Plate by the corresponding altitude adjustment factor shown below. This chart is provided as a reference.

Adjusted room area ($A_{min\ adj}$) is the product of the minimum room area specified on the Serial Plate and the adjustment factor AF, as shown in below formula.

$A_{min\ adj} = A_{min}$ (serial plate) * AF

Height in meters	Height in feet	Altitude Adjustment Factor (AF)
At sea level	At sea level	1.00
1~200	1~660	1.02
200~400	660~1320	1.03
400~600	1320~1970	1.05
600~800	1970~2630	1.07
800~1000	2630~3290	1.09
1000~1200	3290~3940	1.11
1200~1400	3940~4600	1.13
1400~1600	4600~5250	1.15
1600~1800	5250~5910	1.17
1800~2000	5910~6570	1.19
2000~2200	6570~7220	1.21
2200~2400	7220~7880	1.24
2400~2600	7880~8540	1.26
2600~2800	8540~9190	1.29
2800~3000	9190~9850	1.31
3000~3200	9850~10500	1.34

01_EN_DNA_FIT_Goodman.indd 4 2024/07/04 9:56:47

INSTALLATION CLEARANCES

- Installation clearances mean required clearances for installation, maintenance and enhancing system performance.
- The following installation clearances are based on the cooling operation in 95°F ambient condition. In the case systems operate more than 95°F ambient condition or the cooling load is greater than system maximum capacity, it is desirable to leave greater clearance.
- Working space and ventilation should be considered.
- Keep more than 10” clearance on the right side of unit for working space.
- Dimension “H” is the height from the ground to the top of the unit, and dimension “L” is the height of the wall.
- Wind Baffle part (KPW5G112) can be used to help limit air recirculation when there is a wall facing the outlet side and no top. Take care to ensure Wind Baffle is suitable for specific installation site.

*1 If you put a unit on a stand, any gap between the unit and ground has to be closed to avoid bypassing outlet air.
*3 As space allows, maximize clearance with the wall facing the outlet side.
*4 As space allows, maximize clearance with the wall facing the outlet side and the inlet side maitaining a ratio of 5:1. Raising the unit off the ground with a stand can help limit air recirculation in cases where there is a concern for it.

1.5 - 3.0 ton model and 2.0 ton Enhanced Capacity/High Efficiency model

One unit installation

unit: inch

Open top installation

1. Wall facing inlet side

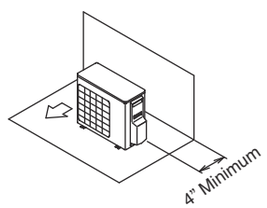

2. Wall facing three side

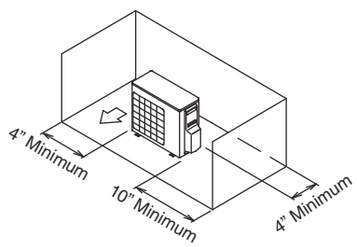

3. Wall facing outlet side*3

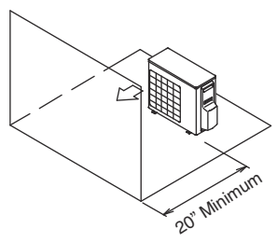

Closed top installation

1. Wall facing inlet side

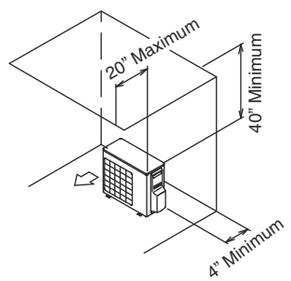

2. Wall facing three side

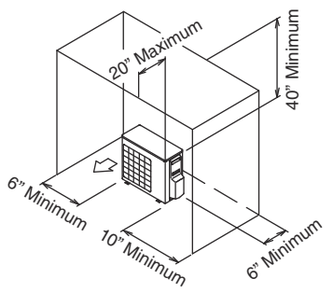

3. Wall facing outlet side

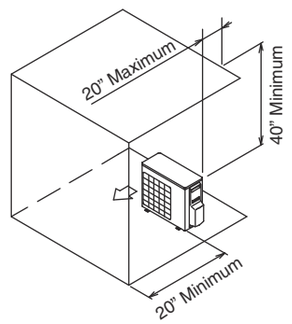

Wall facing inlet and outlet side

- Wall facing outlet side is higher than unit

1. Open top installation*4

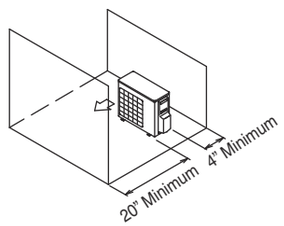

2. Closed top installation*1

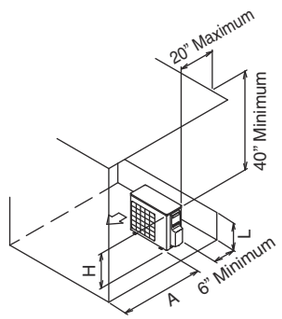

	L	A
L ≤ H	L ≤ 0.5H	30” Minimum
	0.5H < L ≤ H	40” Minimum
L > H	Use a stand to meet L ≤ H. Required dimension A is same as L ≤ H.	

01_EN_DNA_FIT_Goodman.indd 5 2024/06/11 15:21:40

• Wall facing outlet side is lower than unit

unit: inch

1. Open top installation

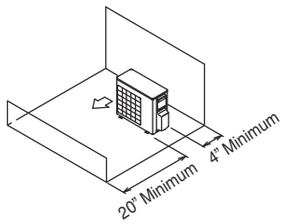

2. Closed top installation*1

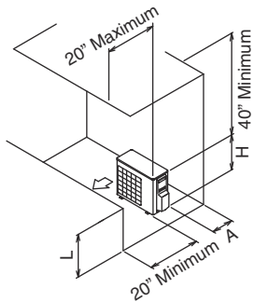

	A
L ≤ H	4" Minimum
L > H	Use a stand to meet L ≤ H or keep 35" or more clearance to front wall. If using stand, required dimension A is same as L ≤ H. If not using stand, dimension A is 4" minimum.

Two units or more installation

Open top installation

1. Wall facing three side

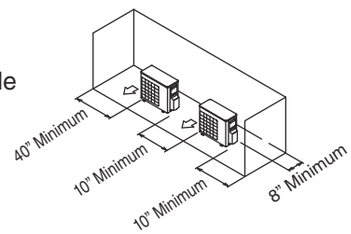

2. Wall facing outlet side

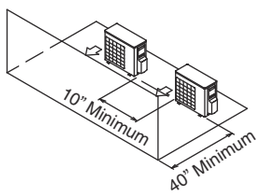

Closed top installation

1. Wall facing outlet side

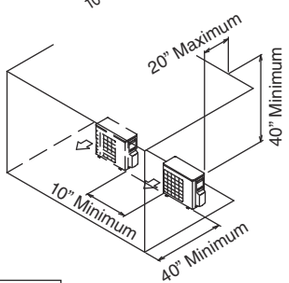

2. Wall facing three side

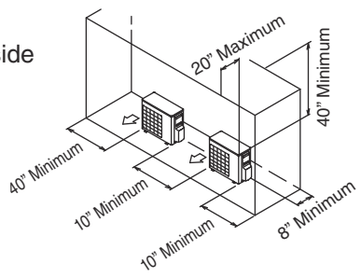

Wall facing inlet and outlet side

• Wall facing outlet side is higher than unit

1. Open top installation*4

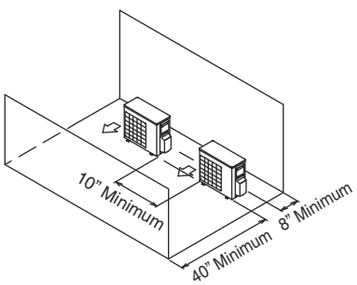

2. Closed top installation*1, *2

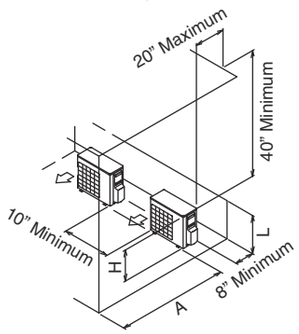

	L	A
L ≤ H	L ≤ 0.5H	40" Minimum
	0.5H < L ≤ H	50" Minimum
L > H	Use a stand to meet L ≤ H. Required dimension A is same as L ≤ H.	

• Wall facing outlet side is lower than unit

1. Open top installation

L	A
L ≤ 0.5H	6" Minimum
0.5H < L ≤ H	8" Minimum

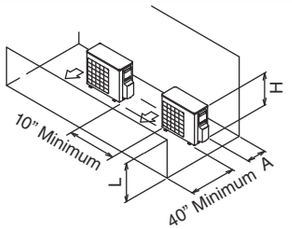

2. Closed top installation*1, *2

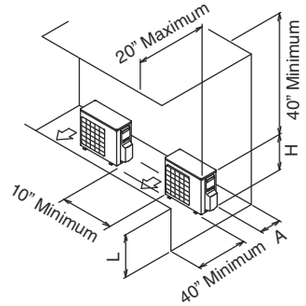

	L	A
L ≤ H	L ≤ 0.5H	6" Minimum
	0.5H < L ≤ H	8" Minimum
L > H	Use a stand to meet L ≤ H or keep 70" or more clearance to front wall. If using stand, required dimension A is same as L ≤ H. If not using stand, dimension A is 8" minimum.	

*2 Maximum two units are allowed to install.

01_EN_DNA_FIT_Goodman.indd 6 2024/06/19 20:30:13

Double decker installation

unit: inch

1. Wall facing outlet side

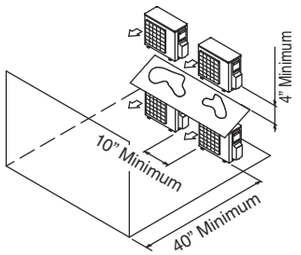

2. Wall facing inlet side

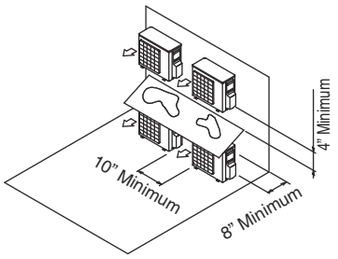

Note:
- Do not stack more than two units.
- If there is a concern for drain water freezing, a roof is required to be installed between the units while ensuring:
  - Drain water does not fall on bottom unit.
  - Drain water can properly flow to avoid becoming stagnant and freezing.

Multiple rows of series installation
(There is no restriction on the height of the wall.)

1. One row of stand alone installation

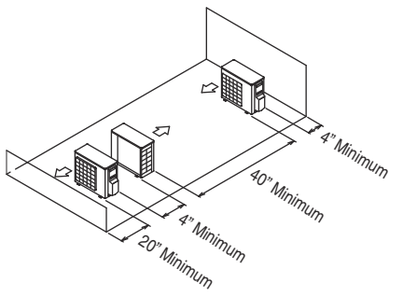

2. Rows of series installation (2 or more)

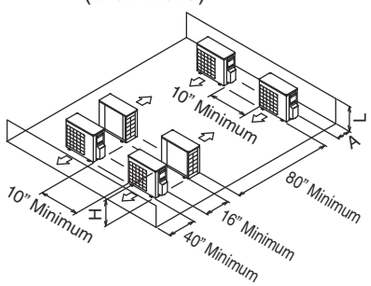

	L	A
L ≤ H	L ≤ 0.5H	6" Minimum
	0.5H < L ≤ H	8" Minimum
L > H	Not available.	

Note:
- Do not install inlet side and outlet side face to face.

3.5 - 5.0 ton model and 3.0 - 4.0 ton Enhanced Capacity/High Efficiency model only

One unit installation

unit: inch

Open top installation

1. Wall facing inlet side

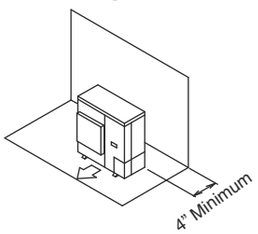

2. Wall facing three side

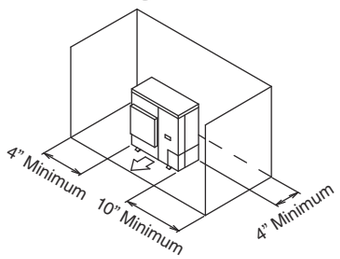

3. Wall facing outlet side*3

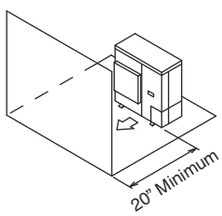

Closed top installation

1. Wall facing inlet side

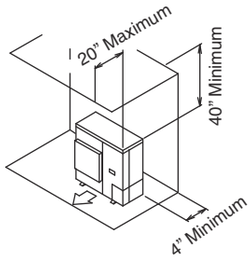

2. Wall facing three side

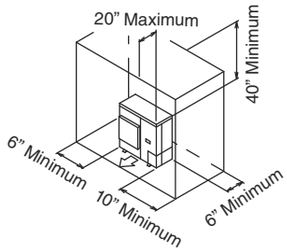

3. Wall facing outlet side

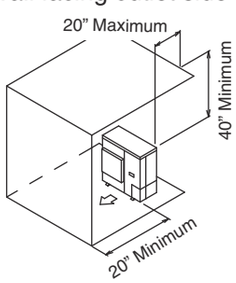

01_EN_DNA_FIT_Goodman.indd 7 2024/06/11 15:21:41

Wall facing inlet and outlet side

unit: inch

• Wall facing outlet side is higher than unit

1. Open top installation*4

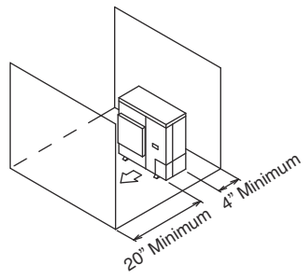

2. Closed top installation*1

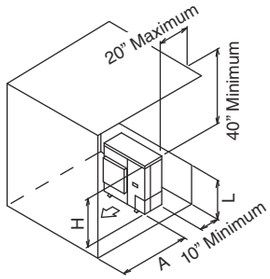

	L	A
L ≤ H	L ≤ 0.5H	30” Minimum
	0.5H < L ≤ H	40” Minimum
L > H	Use a stand to meet L ≤ H. Required dimension A is same as L ≤ H.	

• Wall facing outlet side is lower than unit

1. Open top installation

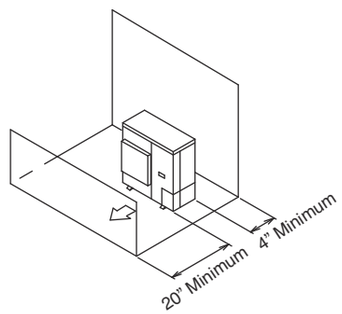

2. Closed top installation*1

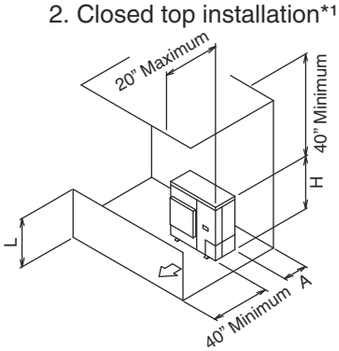

	L	A
L ≤ H	L ≤ 0.5H	4” Minimum
	0.5H < L ≤ H	8” Minimum
L > H	Use a stand to meet L ≤ H or keep 70” or more clearance to front wall. If using stand, required dimension A is same as L ≤ H. If not using stand, dimension A is 8” minimum.	

Two units or more installation

Open top installation

1. Wall facing three side

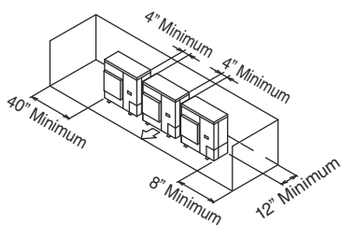

2. Wall facing outlet side

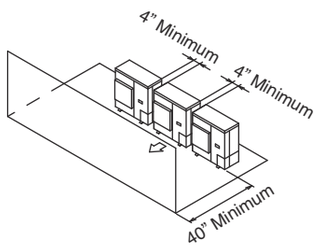

Closed top installation

1. Wall facing outlet side

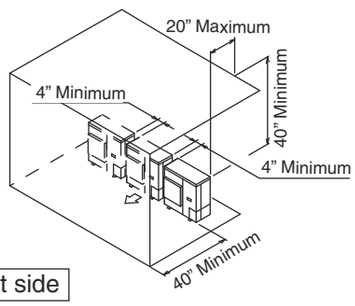

2. Wall facing three side

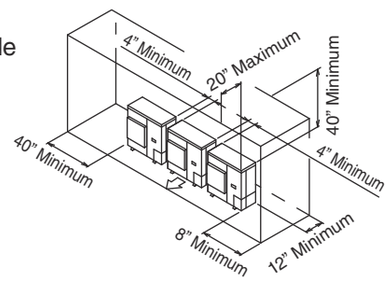

Wall facing inlet and outlet side

• Wall facing outlet side is higher than unit

1. Open top installation*4

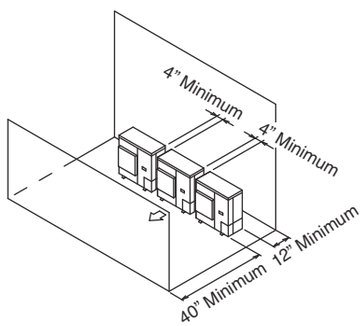

2. Closed top installation*1, *2

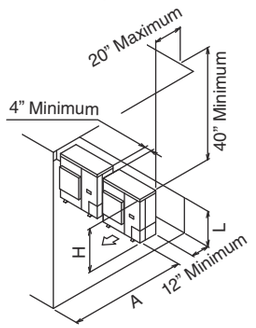

	L	A
L ≤ H	L ≤ 0.5H	40” Minimum
	0.5H < L ≤ H	50” Minimum
L > H	Use a stand to meet L ≤ H. Required dimension A is same as L ≤ H.	

*2 Maximum two units are allowed to install.

01_EN_DNA_FIT_Goodman.indd 8 2024/06/19 20:30:13

• Wall facing outlet side is lower than unit

unit: inch

1. Open top installation

L	A
L ≤ 0.5H	10” Minimum
0.5H < L ≤ H	12” Minimum

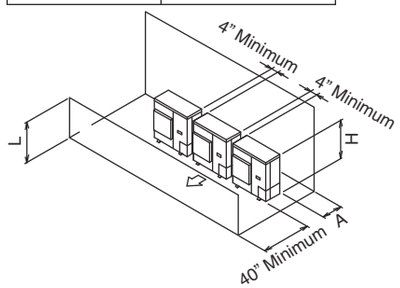

2. Closed top installation*1, *2

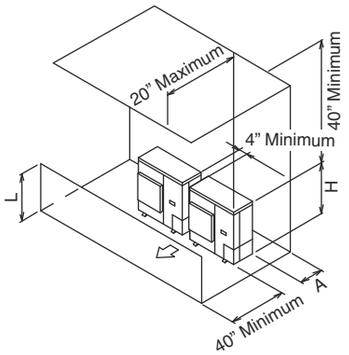

	L	A
L ≤ H	L ≤ 0.5H	10” Minimum
	0.5H < L ≤ H	12” Minimum
L > H	Use a stand to meet L ≤ H or keep 70” or more clearance to front wall. If using stand, required dimension A is same as L ≤ H. If not using stand, dimension A is 12” minimum.	

Double decker installation

1. Wall facing outlet side

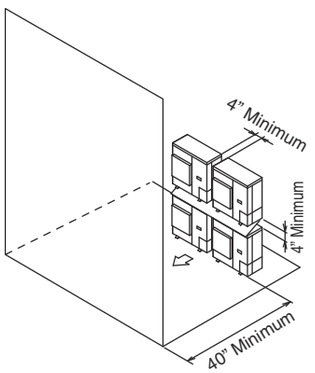

2. Wall facing inlet side

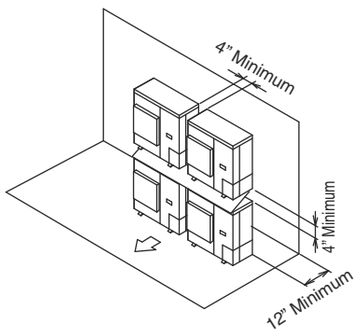

Note:
- Do not stack more than two units.
- If there is a concern for drain water freezing, a roof is required to be installed between the units while ensuring:
  - Drain water does not fall on bottom unit.
  - Drain water can properly flow to avoid becoming stagnant and freezing.

Multiple rows of series installation
(There is no restriction on the height of the wall.)

1. One row of stand alone installation

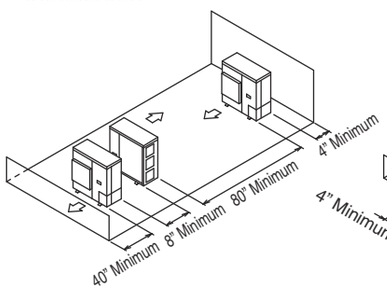

2. Rows of series installation*1 (2 or more)

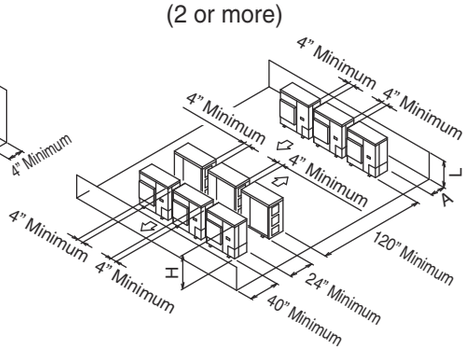

	L	A
L ≤ H	L ≤ 0.5H	10” Minimum
	0.5H < L ≤ H	12” Minimum
L > H	Not available.	

Note:
- Do not install inlet side and outlet side face to face.

*2 Maximum two units are allowed to install.

01_EN_DNA_FIT_Goodman.indd 9 2024/06/19 20:30:13

This unit can be located at ground floor level or on flat roofs. At ground floor level, the unit must be on a solid, level foundation that will not shift or settle. To reduce the possibility of sound transmission, the foundation slab should not be in contact with or be an integral part of the building foundation. Care should be taken to ensure the unit is installed away from noise sensitive locations such as bedrooms, windows and outdoor living areas. Ensure the foundation is sufficient to support the unit. A concrete slab raised above ground level provides a suitable base.

Cold Climate Outdoor Unit Operation Location

When installing the unit in a place frequently exposed to snow, pay special attention to the following:

- Install the outdoor unit on a stand (field supply), so that the bottom frame is more than 19 3/4 in. (500 mm) higher than the expected snow fall to prevent it from being covered by snow.
- Attach a snow hood (field supply) and a snow vizor (field supply).
- Remove the rear inlet grille to prevent snow from accumulating on the rear fins.
- Avoid installation at the place where a snowdrift is generated.
- Further, perform the following countermeasures, since there is risk that the drain water produced at the defrost operation freezes.
- In areas where the outdoor temperature is below 32°F (0°C) for more than 12 hours, it is highly recommended to use a drain pan heater (optional accessory) to prevent condensation from freezing in the bottom frame.
- Do not use a concentrated drain pipe. (If so there is a risk of freezing.) Only utilize the existing holes for drainage.

⚠ CAUTION

When operating the outdoor unit in a low outdoor ambient temperature, be sure to follow the instructions described below.

- **To prevent exposure to wind, install the outdoor unit with its suction side facing the wall.**
- **Never install the outdoor unit at a site where the suction side may be exposed directly to wind.**
- **To prevent exposure to wind, it is recommended to install a baffle plate on the air discharge side of the outdoor unit.**
- **In heavy snowfall areas, select an installation site where the snow will not affect the unit.**

- Construct a large canopy.
- Construct a pedestal.



Install the unit high enough off the ground to prevent burying in snow.

Rooftop Installations

If it is necessary to install this unit on a roof structure, ensure the roof structure can support the weight and that proper consideration is given to the weather-tight integrity of the roof. Since the unit can vibrate during operation, sound vibration transmission should be considered when installing the unit. Vibration absorbing pads or springs can be installed between the outdoor unit legs or frame and the roof mounting assembly to reduce noise vibration.

Electrical Noise

The unit should be well grounded so that potential effects of electrical noise from the inverter to surrounding equipment can be minimized.

When selecting an installation location, keep sufficient distance from the outdoor unit and wiring to radios, personal computers, stereos, fluorescent lamp, etc., as shown in the following figure.

Also keep communication wiring 2” away from high voltage power cable to avoid communication error due to noise.

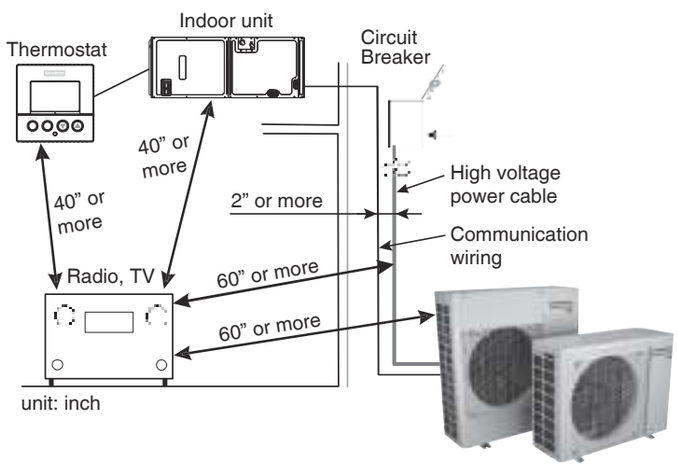

Placement to Minimize Electronic Noise

01_EN_DNA_FIT_Goodman.indd 10 2024/06/19 20:30:14

Safety Considerations

Read these Safety considerations for Installation carefully before installing a outdoor unit. After completing the installation, make sure that the unit operates properly during the system start-up operation.
Instruct the customer on how to operate and maintain the unit.
Inform customers that they should store this Installation Manual for future reference.
Always use a licensed installer or contractor to install this product.
Improper installation can result in water or refrigerant leakage, electrical shock, fire, or explosion.

Meanings of Symbols

⚠ WARNING ..... Indicates a potentially hazardous situation which, if not avoided, could result in death or serious injury.

⚠ CAUTION ..... Indicates a potentially hazardous situation which, if not avoided, may result in minor or moderate injury. It may also be used to alert against unsafe practices.

NOTICE ..... Indicates situations that may result in equipment or property damage accidents only.

While these items will not cover every conceivable situation, they should serve as a useful guide.

⚠ WARNING

To avoid possible injury, explosion or death, practice safe handling of refrigerants.

⚠ WARNING

Refrigerants are heavier than air. They can "push out" the oxygen in your lungs or in any enclosed space. To avoid possible difficulty in breathing or death:

- Never purge refrigerant into an enclosed room or space. By law, all refrigerants must be reclaimed.
- If an indoor leak is suspected, thoroughly ventilate the area before beginning work.
- Liquid refrigerant can be very cold. To avoid possible frostbite or blindness, avoid contact and wear gloves and goggles. If liquid refrigerant does contact your skin or eyes, seek medical help immediately.
- If refrigerant gas leaks during installation, ventilate the area immediately. Refrigerant gas will result in producing toxic gas if it comes into contact with fire. Exposure to this gas will result in severe injury or death.
- Label the system when charging is complete, Label for refrigerant amount is located inside the unit on the panel. Using a durable marking instrument, fill in the factory charge found on the serial plate of the unit in the first box labeled **FACTORY CHARGE.** In the next box labeled **FIELD CHARGE** fill in the amount of charge added to the system.
  NOTE: The field charge amount may not be finalized until final adjustment. In the third box labeled **TOTAL CHARGE** add the two amounts in the boxes above.
- After completing the installation work, check that the refrigerant gas does not leak throughout the system.
- Do not install unit in an area where flammable materials are present due to risk of explosions that will result in serious injury or death.
- When installing the unit in a small room, take measures to keep the refrigerant concentration from exceeding allowable safety limits. Excessive refrigerant leaks, in the event of an accident in a closed ambient space, could result in oxygen deficiency.
- Always follow **EPA** regulations. Never burn refrigerant, as Poisonous gas will be produced.

⚠ WARNING

To avoid possible explosion, use only returnable (not disposable) service cylinders when removing refrigerant from a system.

- Ensure the cylinder is free of damage which could lead to a leak or explosion.
- Ensure the cylinder hydrostatic test date does not exceed **5** years.
- Cylinders shall be kept in an appropriate position according to instructions.
- Ensure the cylinder pressure rating meets or exceeds **400** psig.

When in doubt, do not use cylinder.

⚠ WARNING

To avoid possible explosion:

- Never apply flame or steam to a refrigerant cylinder. If you must heat a cylinder for faster charging, partially immerse it in warm water.
- Never fill a cylinder more than **80%** full of liquid refrigerant.
- Never add anything other than **R32** to a returnable **R32** cylinder. The service equipment used must be listed or certified for the type of refrigerant use.
- Store cylinders in a cool, dry place. Never use a cylinder as a platform or a roller.

01_EN_DNA_FIT_Goodman.indd 11 2024/05/14 20:04:07

⚠ CAUTION

- Refrigerant R32 in the system must be kept clean, dry, and tight.
  - (a) Clean and Dry - Foreign materials (including mineral oils such as SUNISO oil or moisture) should be prevented from getting into the system.
  - (b) Tight - R32 does not contain any chlorine, does not destroy the ozone layer, and does not reduce the earth's protection again harmful ultraviolet radiation. R32 can contribute to the greenhouse effect if it is released. Therefore take proper measures to check for the tightness of the refrigerant piping installation. Read the chapter Refrigerant Piping and follow the procedures.

⚠ WARNING

- Do not ground units to water pipes, suction line, telephone wires, or lightning rods as incomplete grounding will result a severe shock hazard resulting in severe injury or death. Additionally, grounding to gas pipes will result a gas leak and potential explosion resulting in severe injury or death.
- Safely dispose all packing and transportation materials in accordance with federal/state/local laws or ordinances. Packing materials such as nails and other metal or wood parts, including plastic packing materials used for transportation will result in injuries or death by suffocation.
- Only qualified personnel must carry out the installation work. Installation must be done in accordance with this installation manual. Improper installation could result in water leakage, electric shock, or fire.
- Use only specified accessories and parts for installation work. Failure to use specified parts could result in water leakage, electric shocks, fire, or the unit falling.
- Install the outdoor unit on a foundation strong enough that it can withstand the weight of the unit. A foundation of insufficient strength could result in the unit falling and causing injuries.
- Take into account strong winds, hurricane, or earthquakes when installing. Improper installation could result in the unit falling and causing accidents.
- Make sure that a separate power supply circuit is provided for this unit and that all electrical work is carried out by qualified personnel according to local, state and national regulations. An insufficient power supply capacity or improper electrical construction could result in electric shocks or fire.
- Make sure that all wiring is secured, that specified wires are used, and that no external forces act on the terminal connections or wires. Improper connections or installation could result in fire.
- When wiring, position the wires so that the side plate which covers terminal block of power cable can be securely fastened. Improper positioning of the side plate could result in electric shocks, fire, or the terminals overheating.
- Do not change the setting of the protection devices. If the pressure switch, thermal switch, or other protection device is shorted and operated forcibly, or parts other than those specified by Goodman are used, fire or explosion could result.

⚠ WARNING

All accessories that may become a potential ignition source if installed, such as electronic air cleaners, must only be powered through our accessory control board kit. If an electronic air cleaner is already installed in the duct work and not connected to the accessory control board, it will have to be disabled or removed. Ensure that any additional wiring from the indoor unit to the accessory control board is routed and protected from damage and wear, avoiding the flue pipe and any joints that may need brazed or disconnected for service. Refer to the product specification sheet for the accessory control board kit part number.

⚠ CAUTION

- Do not touch the switch with wet fingers. Touching a switch with wet fingers may result in electric shock.
- Do not allow children to play on or around the unit or it may result in injury.
- The heat exchanger fins are sharp enough to cut, and may result in injury if improperly used. To avoid injury wear glove or cover the fins when working around them.
- Do not touch the refrigerant pipes during and immediately after operation as the refrigerant pipes may be hot or cold, depending on the condition of the refrigerant flowing through the refrigerant piping, compressor, and other refrigerant cycle parts. It may result in your hands getting burns or frostbite if you touch the refrigerant pipes. To avoid injury, give the pipes time to return to normal temperature or, if you must touch them, be sure to wear proper gloves.
- Insulate suction piping to prevent condensation.
- Be careful when transporting the product.
- Take adequate measures to prevent the outdoor unit from being used as a shelter by small animals. Small animals making contact with electrical parts may result in malfunctions, smoke, or fire. Instruct the customer to keep the area around the unit clean.

NOTICE

- If the conventional refrigerant and refrigerator oil are mixed in R32, deterioration will result.
- This outdoor unit is an appliance that should not be accessible to the general public.
- As design pressure is 450 PSIG (3.1 MPa), the wall thickness of field-installed pipes should be selected in accordance with the relevant local, state, and national regulations.

01_EN_DNA_FIT_Goodman.indd 12 2024/07/01 16:54:02

Safe Refrigerant Handling

Prior to beginning work on systems containing flammable refrigerants, safety checks are necessary to ensure that the risk of ignition is minimized. Work shall be undertaken under a controlled procedure as stated in this manual so as to minimize the risk of a flammable gas or vapor being present while the work is being performed. All persons working in the local area shall be instructed on the nature of work being carried out. Work in confined spaces shall be avoided. The area shall be checked with an appropriate refrigerant detector prior to and during work, to ensure the technician is aware of potentially flammable atmospheres. Ensure that the leak detection equipment being used is suitable for use with A2L refrigerants, i.e. non-sparking, adequately sealed or intrinsically safe.

If any hot work is to be conducted on the refrigerating equipment or any associated parts, appropriate fire extinguishing equipment shall be available. Have a dry powder or CO2 fire extinguisher adjacent to the charging area. No person carrying out work on the refrigeration system shall use any sources of ignition in such a manner that it may lead to the risk of fire or explosion. All possible ignition sources, including cigarette smoking, should be kept sufficiently far from the site of work, during which refrigerant can possibly be released to the surrounding space. Prior to work taking place, the area around the equipment is to be surveyed to make sure that there are no flammable hazards or ignition risks. “No Smoking” signs shall be displayed.

Ensure that the area is in the open or that it is adequately ventilated before breaking into the system or conducting any hot work. A degree of ventilation shall continue during the period that the work is carried out. Ventilation should be provided such that any leaked refrigerant will safely disperse, preferably expelled externally into the atmosphere. The outlet for the vacuum pump shall not be close to any potential ignition sources and ventilation shall be available.

Take care to avoid contamination of different refrigerants when using charging equipment. Hoses or lines should be as short as possible. The refrigerant cylinders should be kept in an appropriate position according to their instructions. If a refrigerant leak is suspected, all naked flames shall be extinguished and the area shall be ventilated. If a leak is found which requires brazing, all refrigerant shall be recovered from the system prior to performing hot work. Ensure the unit is grounded prior to charging the system.

Safety Checks to Refrigerant Equipment

Where electrical components are being changed, they shall be fit for the purpose and to the correct specification. At all times the manufacturer’s maintenance and service guidelines shall be followed. If in doubt, consult the manufacturer’s technical department for assistance. The following checks shall be applied to installations using flammable refrigerants:

– The actual refrigerant charge is in accordance with the room size within which the refrigerant containing parts are installed;
– The ventilation machinery and outlets are operating adequately and are not obstructed;
– If an indirect refrigerating circuit is being used, the secondary circuit shall be checked for the presence of refrigerant;
– Marking to the equipment continues to be visible and legible. Markings and signs that are illegible shall be corrected;
– Refrigerating pipe or components are installed in a position where they are unlikely to be exposed to any substance which may corrode refrigerant containing components, unless the components are constructed of materials which are inherently resistant to being corroded or are suitably protected against being so corroded.

01_EN_DNA_FIT_Goodman.indd 13 2024/06/19 20:30:15

Refrigerant Lines

⚠ WARNING

Only brazing techniques and approved mechanical joints should be used to connect refrigerant tubing connections. Non-approved mechanical connectors and other methods are not permitted in this system containing A2L refrigerant. Approved mechanical joints will be detailed in the products specification sheets.

⚠ CAUTION

The compressor PVE oil for R32 units is extremely susceptible to moisture absorption and could cause compressor failure. Do not leave system open to atmosphere any longer than necessary for installation.

Use only refrigerant grade (dehydrated and sealed) copper tubing to connect the outdoor unit with the indoor unit. After cutting the tubing, install plugs to keep refrigerant tubing clean and dry prior to and during installation. Tubing should always be cut square keeping ends round and free from burrs. Clean the tubing to prevent contamination. The liquid line must be insulated if more than 50 ft. of liquid line will pass through an area that may reach temperatures of 30°F or higher than outdoor ambient in cooling mode and/or if the temperature inside the conditioned space may reach a temperature lower than outdoor ambient in heating mode. Never attach a liquid line to any uninsulated portion of the suction line.

Do NOT let refrigerant lines come in direct contact with plumbing, ductwork, floor joists, wall studs, floors, and walls. When running refrigerant lines through a foundation or wall, openings should allow for sound and vibration absorbing material to be placed or installed between tubing and foundation. Any gap between foundation or wall and refrigerant lines should be filled with a pliable silicon-based caulk, RTV or a vibration damping material. Avoid suspending refrigerant tubing from joists and studs with rigid wire or straps that would come in contact with the tubing. Use an insulated or suspension type hanger. Keep both lines separate and always insulate the suction line.

Insulation is necessary to prevent condensation from forming and dropping from the suction line. Insulation tube with 3/8" min. wall thickness is recommended. In severe conditions (likely to exceed 86°F and a relative humidity of 80%) 1/2" insulation may be required. Insulation must be installed in a manner which protects tubing and connections from damage and contamination.

Please use a HVAC flushing solvent to clean lineset of any oil or debris from the existing system.

Cond Unit Tons	Allowable line set diameter						
	Liquid			Suction			
	1/4	5/16	3/8	5/8	3/4	7/8	1 1/8
1.5	x	x	x	x*	x		
2		x	x	x*	x		
2.5		x	x		x*	x	
3		x	x		x*	x	
3.5			x			x	x
4			x			x	x
5			x			x	x

Cond Unit Tons	ENHANCED CAPACITY model Allowable line set diameter				
	Liquid		Suction		
	5/16	3/8	3/4	7/8	1 1/8
2.0	x	x	x*	x	
3		x		x	x
3.5		x		x	x
4		x		x	x

Cond Unit Tons	HIGH EFFICIENCY model Allowable line set diameter				
	Liquid		Suction		
	5/16	3/8	3/4	7/8	1 1/8
2	x	x	x*	x	
3		x		x	x
4		x		x	x

x: Allowable combination

*: For marked combinations, if normal ambient operation temperature is less than 14°F, limit line set length to 50 ft. max.

For line set length, refer to the table on page 27-29.

For new installations it is recommended to select a smaller line set diameter as R32 refrigerant has lower density and less pressure drop compared to R410, so larger diameter piping is not required. For replacement installations it is allowable to keep the current line set diameter for easier installation.

01_EN_DNA_FIT_Goodman.indd 14 2024/07/04 9:56:48

Refrigerant tubing is highly prone to transmit noise and vibration to the adjoining structure. When mounting line set to structural members, use adequate vibration-isolating hardware.

Installation of Refrigeration Piping From Vertical to Horizontal

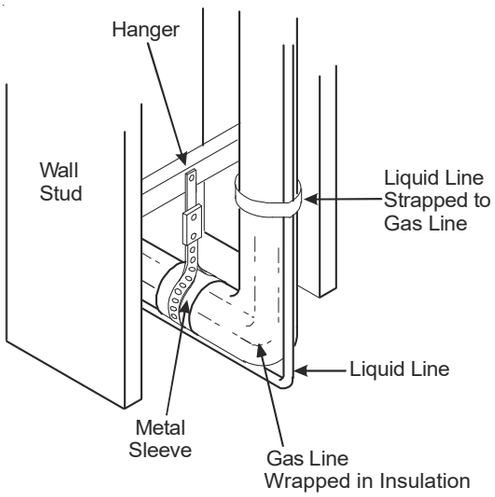

Installation of Refrigerant Piping (Vertical)

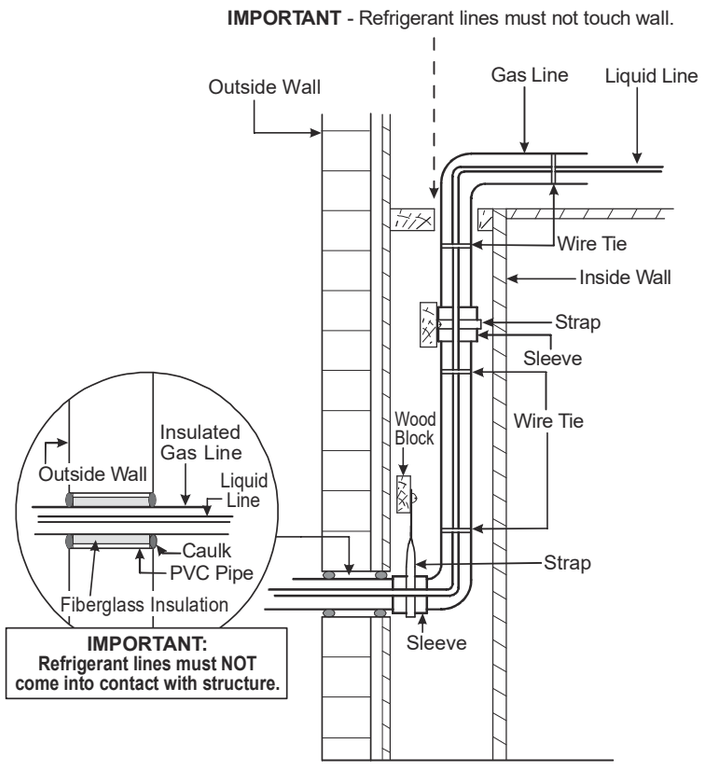

NOTE: If line set is installed on the exterior of an outside wall, similar installation practices are to be used.

01_EN_DNA_FIT_Goodman.indd 15 2024/05/14 20:04:09

Installation of Refrigerant Piping (Horizontal)

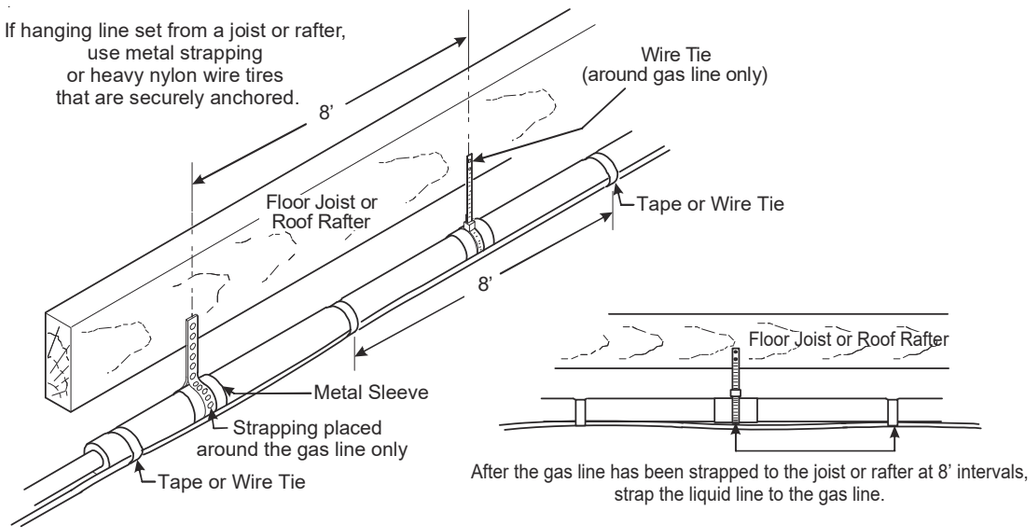

01_EN_DNA_FIT_Goodman.indd 16 2024/05/14 20:04:09

Outdoor Unit BELOW Indoor Unit

Mounting the indoor unit above the outdoor unit will require an inverted loop in the suction line adjacent or near the connection to the indoor unit.
The top of the loop must be slightly higher than the top of the unit. The trap can prevent liquid compression of the compressor for start-up period.

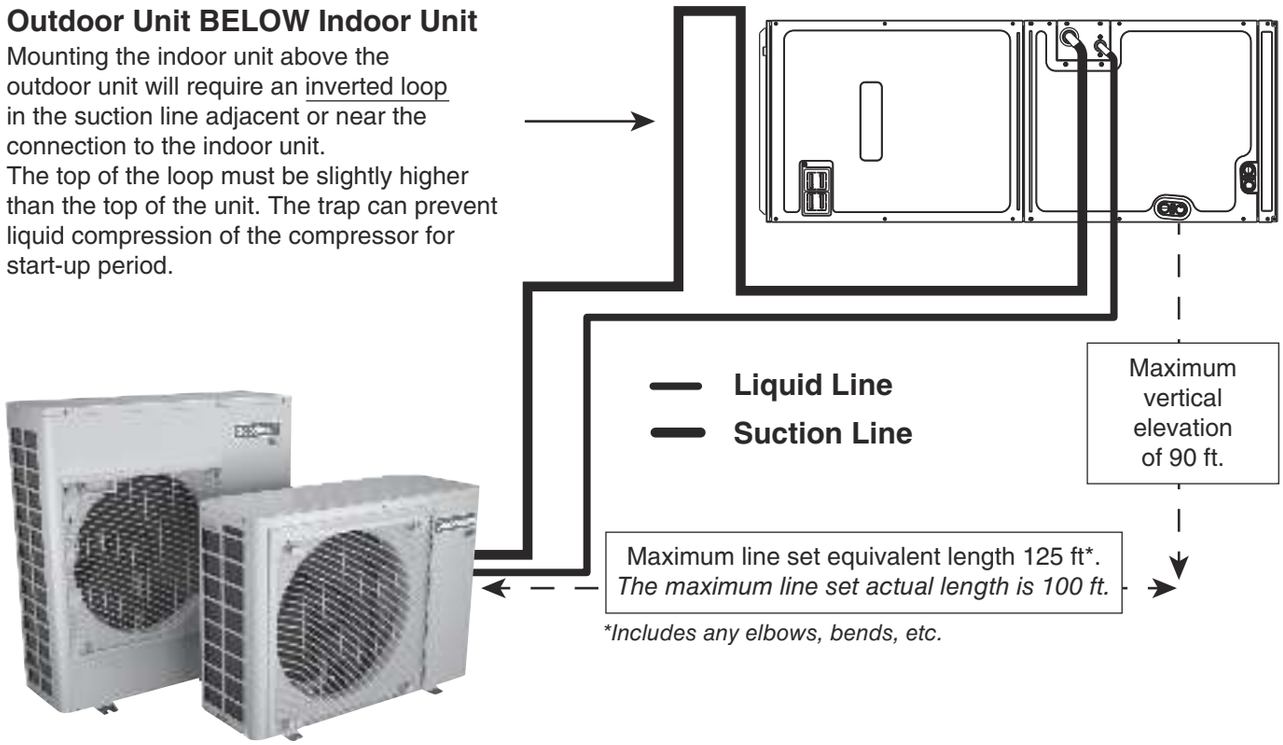

*Includes any elbows, bends, etc.

Outdoor Unit ABOVE Indoor Unit

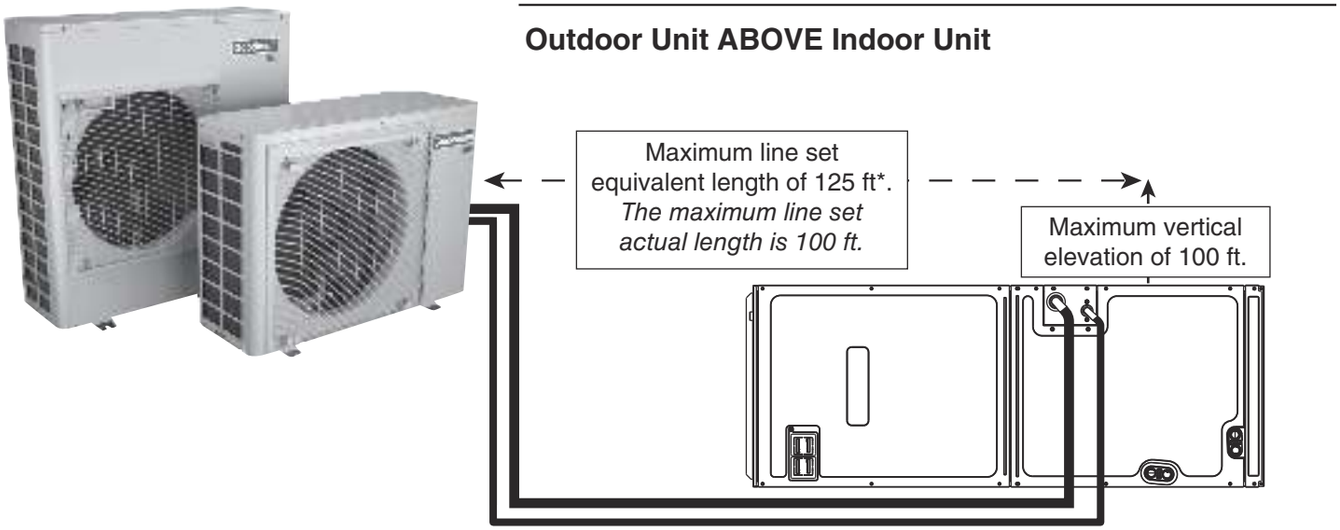

*Included any elbows, bends, etc.

EQUIVALENT LENGTH CALCULATION

NOTE: The following table lists the equivalent length gained from adding bends to the suction line. Properly size the suction line to minimize capacity loss.

Type of Elbow Fitting	Inside Diameter (in)		
	3/4	7/8	1 1/8
90° short radius	1.7	2	2.3
90° long radius	1.5	1.7	1.6
45° radius	0.7	0.8	1

unit: feet

01_EN_DNA_FIT_Goodman.indd 17 2024/06/19 20:30:16

Refrigerant Line Connections

IMPORTANT

To avoid overheating the service valve, sensors, or filter drier while brazing, wrap the component with a wet rag, or use a thermal heat trap compound. If using a wet rag care should be taken to not get water/moisture inside the tubing as it's very important to keep moisture out of the system. Be sure to follow the manufacturer's instruction when using the heat trap compound.
Note: Remove Schrader valves from service valves before brazing tubes to the valves. After brazing temperature is reached, use a brazing alloy of 2% minimum silver content. Do not use flux.

Torch heat required to braze tubes of various sizes is proportional to the size of the tube. Tubes of smaller size require less heat to bring the tube to brazing temperature before adding brazing alloy. Applying too much heat to any tube can melt the tube. Service personnel must use the appropriate heat level for the size of the tube being brazed.

NOTE: The use of a heat shield when brazing is recommended to avoid burning the serial plate or the finish on the unit.

1. The ends of the refrigerant lines must be cut square, deburred, cleaned, and be round and free from nicks or dents. Any other condition increases the chance of a refrigerant leak.
2. Purge with nitrogen at 2 to 3 PSIG during brazing to prevent the formation of copper-oxide inside the refrigerant lines. The PVE oils used in R32 applications will clean any copper-oxide present from the inside of the refrigerant lines and spread it throughout the system. This may cause a blockage or failure of the metering device.
3. During and after brazing, quench the joints with water or a wet cloth to prevent overheating of the service valve.
4. A bi-flow filter drier is shipped with the unit as a separate component and must be brazed on by the installer on-site. Ensure the bi-flow filter drier paint finish is intact after brazing. If the paint of the steel filter drier has been burned or chipped, repaint or treat with a rust inhibitor.

   The recommended location of the filter drier is before the expansion device at the indoor unit.

NOTE: Be careful not to kink or dent refrigerant lines. Kinked or dented lines will cause poor performance or compressor damage.

Do NOT make final refrigerant line connection until plugs are removed from refrigerant tubing.

NOTE: Preventing foreign objects from entering.

- Plug the pipe through-holes with accessory set or putty (field supply) to cover all gaps.
- Insects or small animals may enter inside of outdoor units and cause damage to the electrical components.

When breaking into the refrigerant circuit to make repairs – or for any other purpose –
Conventional procedures shall be used. However, for flammable refrigerants it is important that best practice be followed, since flammability is a consideration. The following procedure shall be adhered to:

– Safely remove refrigerant following local and national regulations;
– Evacuate;
– Purge the circuit with inert gas (optional for A2L);
– Evacuate (optional for A2L);
– Continuously flush or purge with inert gas when using flame to open circuit; and
– Open the circuit.

The refrigerant charge shall be recovered into the correct recovery cylinders if venting is not allowed by local and national codes. For appliances containing flammable refrigerants, the system shall be purged with oxygen-free nitrogen to render the appliance safe for flammable refrigerants. This process might need to be repeated several times. Compressed air or oxygen shall not be used for purging refrigerant systems. For appliances containing flammable refrigerants, refrigerants purging shall be achieved by breaking the vacuum in the system with oxygen-free nitrogen and continuing to fill until the working pressure is achieved, then venting to atmosphere, and finally pulling down to a vacuum (optional for A2L). This process shall be repeated until no refrigerant is within the system (optional for A2L). When the final oxygen-free nitrogen charge is used, the system shall be vented down to atmospheric pressure to enable work to take place. The outlet for the vacuum pump shall not be close to any potential ignition sources, and ventilation shall be available.

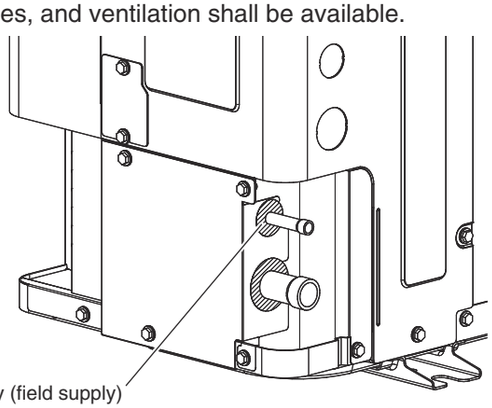

Putty (field supply)
(3.5 - 5.0 ton model and 3.0 - 4.0 ton Enhanced Capacity model only)

01_EN_DNA_FIT_Goodman.indd 18 2024/06/11 15:21:43

Leak Testing (Nitrogen)

⚠ WARNING

To avoid the risk of fire or explosion, never use oxygen, high pressure air or flammable gases for leak testing of a refrigeration system.

⚠ WARNING

To avoid possible explosion, the line from the nitrogen cylinder must include a pressure regulator and a pressure relief valve. The pressure relief valve must be set to open at no more than 450 psig.

To locate leaks, test system pressure using dry nitrogen, dry helium, or use leak detector fluid as recommended below and check for leak. **No refrigerant shall be used for pressure testing to detect leaks.**

Leak test the system using the following leak detection methods as they are deemed acceptable for all refrigerant systems:

- Leak detection fluids are also suitable for use with most refrigerants but the use of detergents containing chlorine shall be avoided as the chlorine may react with the refrigerant and corrode the copper pipe-work. Examples of leak detection fluids are – bubble method, – fluorescent method agents.

Under no circumstances shall potential sources of ignition be used in the searching for or detection of refrigerant leaks. A halide torch (or any other detector using a naked flame) shall not be used.

If leaks are found, repair them. After repair, repeat the pressure test. If no leaks exist, proceed to ***SYSTEM EVACUATION.***

Standing Pressure Test

Best practices dictate system should be pressure tested at 450 PSIG with nitrogen for a minimum 1 hour (4 hours recommended). Follow the procedure outlined below to test system. If leaks are found, repair them. After repair, repeat the leak pressure test described above. Extreme care shall be taken not to overfill the Refrigerating System. Prior to recharging the system, it shall be pressure-tested with the appropriate purging gas. The system shall be leak-tested on completion of charging but prior to commissioning. A follow up leak test shall be carried out prior to leaving the site. If no leaks exist, proceed to system evacuation and charging.

System Pressure Testing (Recommended)

Once all of the refrigerant line connections are completed. Perform a 3-step nitrogen pressure test.

1. Pressurize the system with nitrogen to 150 PSIG and hold for 3 minutes. If any pressure drops occur, locate and repair leaks and repeat step 1.
2. Pressurize the system with nitrogen to 325 PSIG and hold for 5 minutes. If any pressure drops occur, locate and repair leaks and repeat step 1.
3. Pressurize the system with nitrogen to 450 PSIG and hold for 1 hour (4 hours recommended). If any pressure drops occur, locate and repair leaks and repeat step 1.

01_EN_DNA_FIT_Goodman.indd 19 2024/07/01 16:54:03

System Evacuation

Outdoor unit liquid and suction valves are closed to contain the charge within the unit. The unit is shipped with the valve stems closed and caps installed. **Do not open valves until the indoor unit and line set is evacuated.**

⚠ CAUTION

Prolonged operation at suction pressures less than 20 psig for more than 5 seconds will result in overheating of the compressor and may cause permanent damage to it.

1. Connect the vacuum pump with 250 micron capability to the service valves.
2. Evacuate the system to 500 microns or less using suction and liquid service valves. Using both valves is necessary.
3. Close pump valve and hold vacuum for 10 minutes. Typically pressure will rise during this period.
   - If the pressure rises to 500 microns or less and remains steady the system is considered leak-free; proceed to start-up.
   - If pressure rises above 500 microns moisture and/or noncondensibles may be present or the system may have a small leak. Return to step 2: If the same result is encountered check for leaks as previously indicated and repair as necessary then repeat evacuation.

The Triple Evacuation Method is (Recommended)

1. Evacuate the system to 4000 microns and hold for 15 minutes. Then, break the vacuum with dry nitrogen. Bring the system pressure up to 2-3 PSIG and hold for 20 minutes. Release the nitrogen.
2. Evacuate to 1500 microns and hold for 20 minutes. Break the vacuum with dry nitrogen again. Bring the system pressure back up to 2-3 PSIG and hold for 20 minutes.
3. Then, evacuate the system until it is below 500 microns and hold for 60 minutes.

System Start-up Procedure

GENERAL NOTES:

Adequate refrigerant charge for the matching indoor unit and line set is supplied with the outdoor unit. If liquid line set exceeds factory charge length, refrigerant should be added based on liquid line. Refer pages 27-29 for calculation of refrigerant charge based on line set length.

NOTICE

Violation of EPA regulations may result in fines or other penalties.

NOTICE

All units should have a high voltage power supply connected 2 hours prior to startup.

⚠ WARNING

REFRIGERANT UNDER PRESSURE!

- **Do not overcharge system with refrigerant.**
- **Do not operate unit in a vacuum or at negative pressure.**

Failure to follow proper procedures may cause property damage, personal injury or death.

⚠ CAUTION

Operating the compressor with the suction valve closed will cause serious compressor damage - such damage is not covered by our warranties.

⚠ CAUTION

If compressors or compressor oils are to be removed, ensure that they have been evacuated to an acceptable level to make certain that flammable refrigerant does not remain within the lubricant. The compressor body shall not be heated by an open flame or other ignition sources to accelerate this process. When oil is drained from a system, it shall be carried out safely.

⚠ CAUTION

Use refrigerant certified to AHRI standards. Used refrigerant may cause compressor damage, and is not covered under the warranty. Most portable machines cannot clean used refrigerant to meet AHRI standards.

01_EN_DNA_FIT_Goodman.indd 20 2024/06/19 20:30:17

STOP VALVE OPERATION METHOD

The figure below shows the name of each part required in handling the stop valve. At the time of shipment, the stop valve is closed.

⚠ CAUTION

- **BE SURE TO OPEN THE STOP VALVE.**
- **INADEQUATE TORQUE MAY CAUSE LEAKAGE OF REFRIGERANT.**

Opening Procedure

1. Remove the valve lid and use a hexagonal wrench to turn valve counterclockwise.
2. Turn valve until shaft stops.
3. Then turn valve until designated torque as shown in below table is achieved (3.5 - 5.0 ton model and 3.0 - 4.0 ton Enhanced Capacity/High Efficiency model only due to back sealing type valve).
4. Put valve lid on valve.

Closing Procedure

1. Remove the valve lid and use a hexagonal wrench to turn valve clockwise.
2. Turn valve until shaft stops.
3. Then turn valve until designated torque as shown in below table is achieved.
4. Put valve lid on valve.

<1.5 - 3.0 ton model and 2.0 ton Enhanced Capacity/High Efficiency model only>

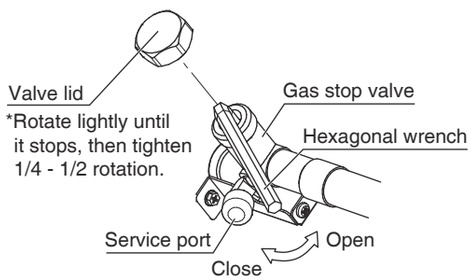

<3.5 - 5.0 ton model and 3.0 - 4.0 ton Enhanced Capacity/High Efficiency model only>

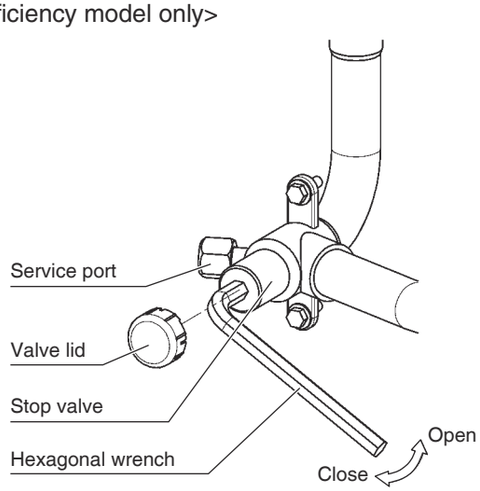

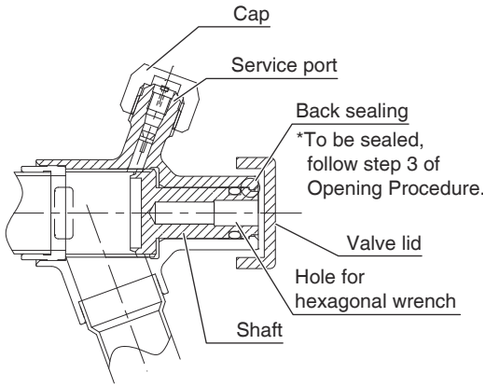

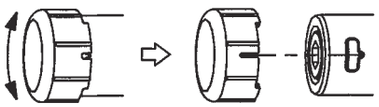

Rotate the valve lid 90° to the right or to the left.

Align the recess of the valve lid and the T-joint on the valve body, then remove the lid.

* The illustration shows the removal procedure. Perform the actions in the reverse order to reattach.

* The illustrations above refer to 3.5 - 5.0 ton model and 3.0 - 4.0 ton Enhanced Capacity/High Efficiency model only.

Stop Valve

Tonnage	Piping	Stop valve size	Type	Tightening torque	Wrench size
1.5 - 2.0 ton	Liquid	3/8”	Front sealing type	4 - 6 lb·ft	3/16”
	Gas	3/4”		14 - 16 lb·ft	5/16”
2.5 - 3.0 ton	Liquid	3/8”		4 - 6 lb·ft	3/16”
	Gas	7/8”		14 - 16 lb·ft	5/16”
3.5 - 5.0 ton	Liquid	3/8”	Front and back sealing type	4 - 5 lb·ft	4 mm
	Gas	7/8”		14 - 16 lb·ft	8 mm

Stop Valve (Enhanced Capacity/High Efficiency model)

Tonnage	Piping	Stop valve size	Type	Tightening torque	Wrench size
2.0 ton	Liquid	3/8”	Front sealing type	4 - 6 lb·ft	3/16”
	Gas	7/8”		14 - 16 lb·ft	5/16”
3.0 - 4.0 ton	Liquid	3/8”	Front and back sealing type	4 - 5 lb·ft	4 mm
	Gas	7/8”		14 - 16 lb·ft	8 mm

Service Port

	Tighten Torque
Service Port (3.5 - 5.0 ton only)	7.9 - 10.8 lb·ft

Service Port (Enhanced Capacity/High Efficiency model)

	Tighten Torque
Service Port (3.0 - 4.0 ton only)	7.9 - 10.8 lb·ft

01_EN_DNA_FIT_Goodman.indd 21 2024/06/19 20:30:21

Electrical Connections

⚠ WARNING

HIGH VOLTAGE!



Disconnect ALL power before servicing. Multiple power sources may be present. Failure to do so may cause property damage, personal injury or death due to electric shock. Wiring must conform with NEC or CEC and all local codes. Undersized wires could cause poor equipment performance, equipment damage or fire.

⚠ WARNING

To avoid the risk of fire or equipment damage, use copper conductors.

⚠ CAUTION

GROUNDING REQUIRED!

Always inspect and use proper service tools. Lack of inspection or improper tools may cause equipment damage or personal injury. All disconnected grounding devices MUST be reconnected before installing or servicing. Multiple components of this unit may conduct electrical current; these are grounded. If servicing the unit, any disconnection of grounding wires, screws, straps, clips, nuts or washers used to complete the ground MUST be returned to their original position and properly fastened.

NOTICE

- **Never install a phase-advancing capacitor. As this unit is equipped with an inverter, installing a phase-advancing capacitor will not only deteriorate power factor improvement effect, but also may cause capacitor abnormal heating accident due to high-frequency waves.**
- **Do not change the setting of the protection devices. If the pressure switch, thermal switch, or other protection device is shorted and operated forcibly, or parts other than those specified by Goodman are used, fire or explosion could result.**
- **Do not connect the ground wire to gas line, sewage pipes, lightning rods, or telephone ground wires.**

Safety Checks to Electrical Devices and Cabling

Repair and maintenance to electrical components shall include initial safety checks and component inspection procedures. If a fault exists that could compromise safety, then no electrical supply shall be connected to the circuit until it is satisfactorily dealt with. If the fault cannot be corrected immediately but it is necessary to continue operation, an adequate temporary solution shall be used. This shall be reported to the owner of the equipment so all parties are advised.

Initial safety checks shall include:

- That capacitors are discharged: this shall be done in a safe manner to avoid possibility of sparking;
- That no live electrical components and wiring are exposed while charging, recovering or purging the system;
- That there is continuity of earth bonding.

Check that cabling will not be subject to wear, corrosion, excessive pressure, vibration, sharp edges or any other adverse environmental effects. The check shall also take into account the effects of aging or continual vibration from sources such as compressors or fans.

01_EN_DNA_FIT_Goodman.indd 22 2024/05/14 20:04:16

High Voltage Connections

Route power supply and ground wires through the high voltage port and terminate in accordance with the wiring diagram.

⚠ CAUTION

- Before connecting the wiring to the terminal block, remove the shielding plate. And take it back after working. **(3.5 - 5.0** ton model and **3.0 - 4.0** ton Enhanced Capacity/High Efficiency model only**)**
- Precautions to be taken for power supply wiring.
  When using stranded wires, make sure to use a round crimp-style terminal for connection to the power supply terminal block.
  Place the round crimp-style terminals on the wires up to the covered part and secure in place.

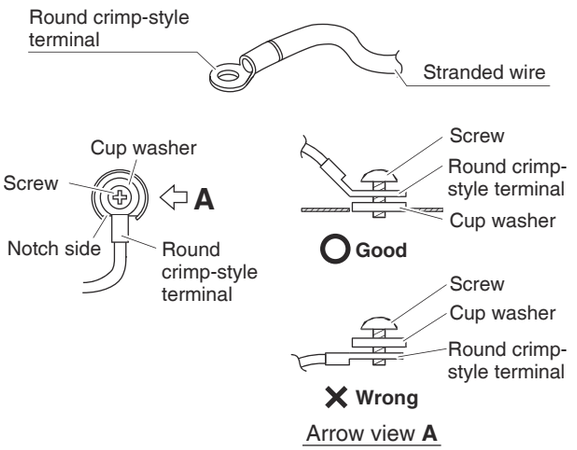

- When connecting the connection wires to the terminal block using a single core wire, be sure to curl the end of the lead. Improper work may cause heat and fires.

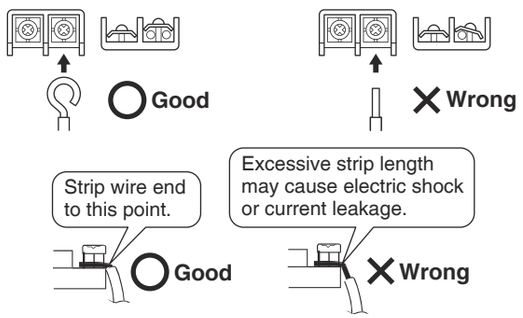

- Use the following method when installing a single core wire.

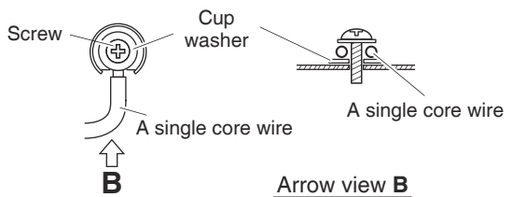

- For wiring, use the designated power wire and connect firmly, then secure to prevent outside pressure being exerted on the terminal board.
- Use an appropriate screwdriver for tightening the terminal screws.
  A screwdriver with a small head will strip the head and make proper tightening impossible.
- Over-tightening the terminal screws may break them.
- See the table below for tightening torque for the terminal screws.

Tightening torque (lb·ft)		
M4	Power supply wire for 1.5 - 3.0 Ton	0.87 - 1.06
M5	Power supply wire for 3.5 - 5.0 Ton	1.76 - 2.15
M5	Ground wire	2.23 - 3.01
M4	Power supply wire for 2.0 Ton Enhanced Capacity/High Efficiency model	0.87 - 1.06
M5	Power supply wire for 3.0 - 4.0 ton Enhanced Capacity/High Efficiency model only	1.76 - 2.15

- Make sure to apply the rated voltage of 208/230V for the unit.
- Use conduit for power supply cables.
- A power circuit (see the following table) must be provided for connection of the unit. This circuit must be protected with the required safety devices.
- When using residual current operated circuit breakers, be sure to use a high-speed type (0.1 seconds or less) 200 mA rated residual operating current.
- Use copper conductors only.
- Use insulated wire for the power cord.
- Select the power supply cable type and size in accordance with relevant local and national regulations.
- Make sure the wirings will not be pinched by the front panel, and close the panel firmly.
- Route the conduit along the unit by using a elbow socket and so on to prevent it from being stepped on.
- The appliance incorporates grounding connections for functional purpose in addition to protective ground.

MODEL NAME	Phase and frequency	Voltage	MCA (Min. circuit amp.)	MOP (Max. overcurrent protective device)	Communication wire selection
GXV6S*181*	1 Phase 60Hz	208/230V	12.8 A	15 A	18 AWG (typical)
GXV6S*241*			16.8 A	20 A	
GXV6S*301*			22.4 A	25 A	
GXV6S*361*			22.4 A	25 A	
GXV6S*421*			31.8 A	35 A	
GXV6S*481*			31.8 A	35 A	
GXV6S*601*			37.5 A	40 A	
GZV6S*181*	1 Phase 60Hz	208/230V	12.8 A	15 A	18 AWG (typical)
GZV6S*241*			16.8 A	20 A	
GZV6S*301*			22.4 A	25 A	
GZV6S*361*			22.4 A	25 A	
GZV6S*421*			31.8 A	35 A	
GZV6S*481*			31.8 A	35 A	
GZV6S*601*			37.5 A	40 A	
GZV7SA2410	1 Phase 60Hz	208/230V	22.4 A	25 A	18 AWG (typical)
GZV7SA3610			31.8 A	35 A	
GZV7SA4210			37.5 A	40 A	
GZV7SA4810			37.5 A	40 A	
GXV9SA2410	1 Phase 60Hz	208/230V	22.4 A	25 A	18 AWG (typical)
GXV9SA3610			31.8 A	35 A	
GXV9SA4810			37.5 A	40 A	

01_EN_DNA_FIT_Goodman.indd 23 2024/06/11 15:21:48

The outdoor unit rating plate lists pertinent electrical data necessary for proper electrical service and overcurrent protection. Wires should be sized to limit voltage drop to 2% (max.) from the main breaker or fuse panel to the outdoor unit. Refer the NEC, CEC, and all local codes to determine the correct wire gauge and length.

A disconnect switch located near the unit is required; do not install the switch on the unit.

It is recommended to use a voltage monitor and surge protection to protect the equipment from any voltage fluctuations or electrical surges.

Low Voltage Connections

The unit is designed to work as part of a fully communicating HVAC system, utilizing a Goodman approved communicating thermostat, Communicating indoor unit, and up to four wires. Route control wires through the low voltage port and terminate in accordance with the wiring diagram provided inside the front plate.

<1.5 - 3.0 ton model and 2.0 ton Enhanced Capacity/High Efficiency model>

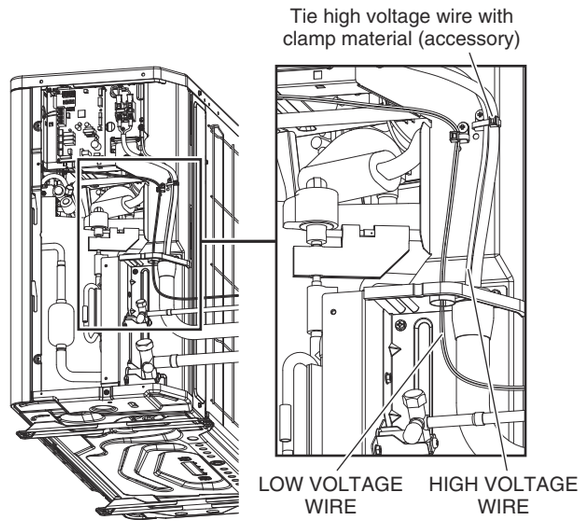

Voltage Ports

<3.5 - 5.0 ton model and 3.0 - 4.0 ton Enhanced Capacity/ High Efficiency model only>

Connect by one of the following options

When using Straight Conduit

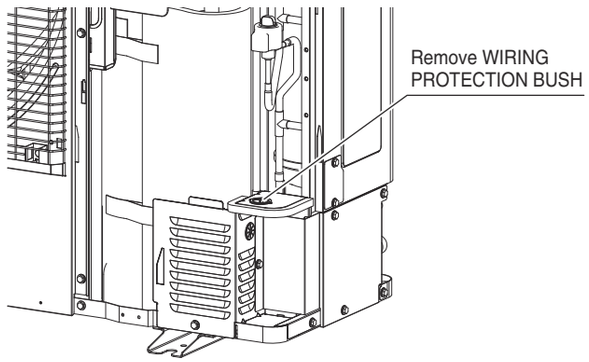

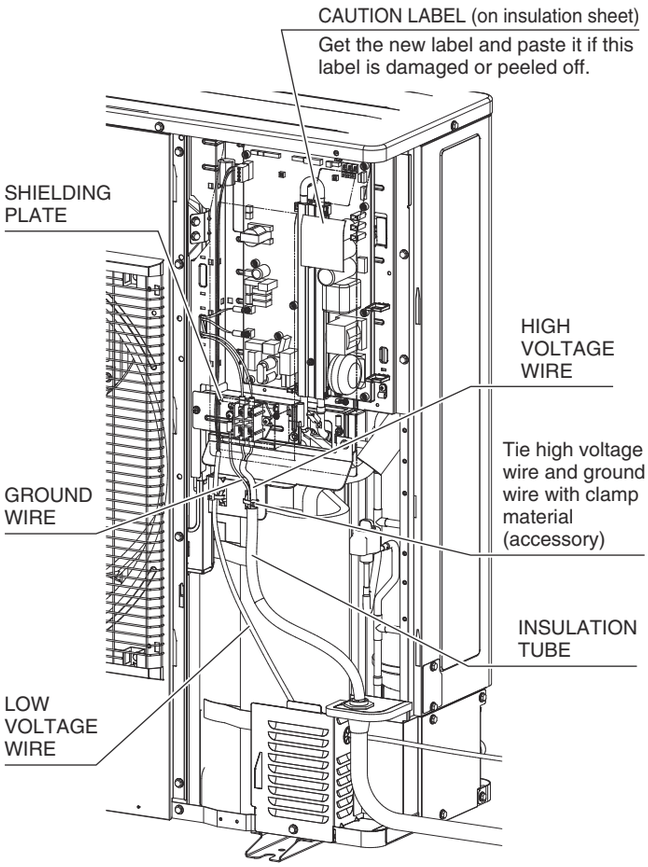

Voltage Ports

When using Elbow Conduit

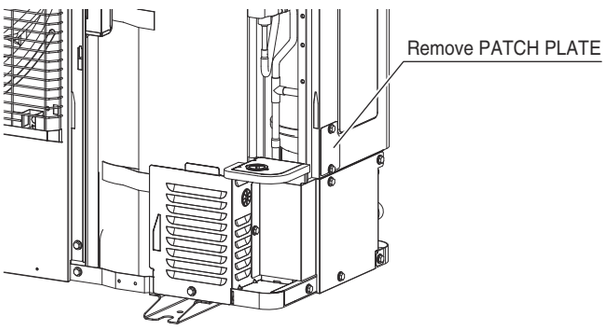

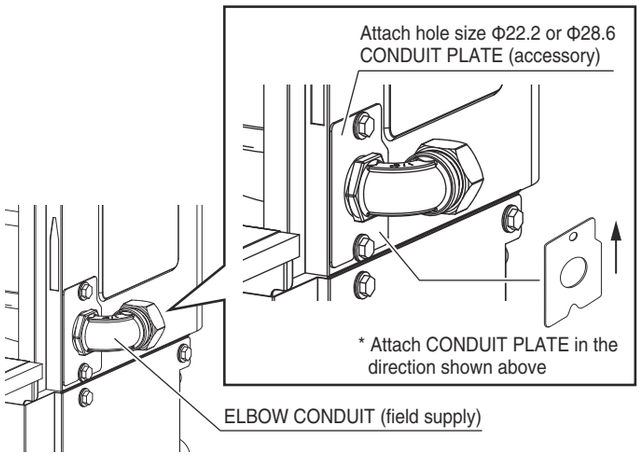

01_EN_DNA_FIT_Goodman.indd 24 2024/06/11 15:21:51

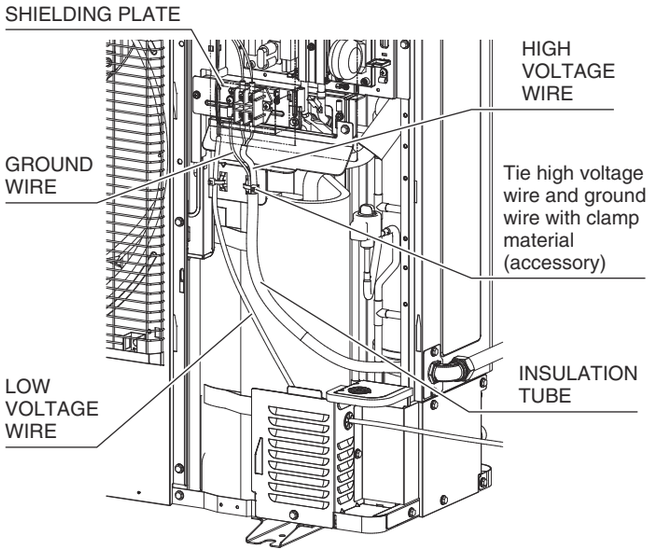

Voltage Ports

NOTE: The communicating thermostat is able to search and identify the indoor and outdoor units when power is applied to the system. Refer to the communicating thermostat's installation instructions for more information.

Connect low voltage communication wires (1, 2) to low voltage pigtail provided.

Communication Wiring

NOTE: A terminal block is attached with the control board to make wiring connections for the thermostat. Connect the wire to the terminal block. (1.5 - 3.0 ton model and 2.0 ton Enhanced Capacity/High Efficiency model only) A removable plug connector is provided with the control board to make thermostat wire connections. Remove the plug, connect the wires to the plug, and then replace. (3.5 - 5.0 ton model and 3.0 - 4.0 ton Enhanced Capacity/High Efficiency model only) It is strongly recommended that you do not connect more than two wires into a single terminal in the field because there is a risk of the wires becoming loose, which may result in communication error. Refer to Troubleshooting Tables for error codes.

To wire the system components, it is strongly recommended to use the same type and same gauge for the wires prepared in the field. (For best results, use 18 AWG.) However, communications reliability may be improved by using a high quality, shielded, twisted pair cable for the data transmission lines.

Finally, be sure to confirm that the wires do not come off each terminal after all connections are finished.

NOTE: When connecting the connection wires to the terminal block, be sure to curl the end of the lead.

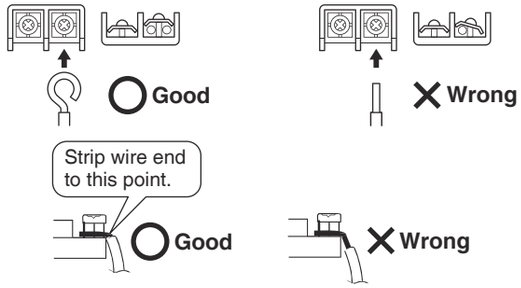

Two-Wire Outdoor, Four-Wire Indoor Wiring

Typical wiring will consist of two wires between the indoor unit and outdoor unit, and four wires between the indoor unit and thermostat. The figure that follows shows the required wires: data lines, 1 and 2 (5 VAC, 100 mA); "R" (24 VAC hot) and "C" (24 VAC common).
Never connect the power wiring to communication terminal. (1, 2, R, C)

<In case of Air Handler>

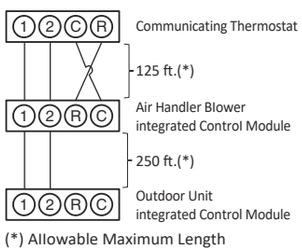

<In case of Cased Coil>

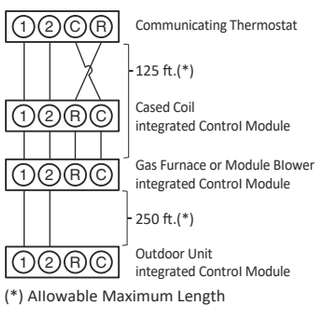

System Wiring

NOTE: When wiring a Kit or Unit different from the above configuration to the communication line, please also check the wiring instructions in the respective installation manuals.

ATTENTION INSTALLER - IMPORTANT NOTICE!

Please read carefully before installing this unit.

- Low voltage terminal C from indoor unit must connect to low voltage terminal C on thermostat and low voltage terminal R from indoor unit must connect to low voltage terminal R on thermostat. Verify wires are not reversed. (Note: The order of the terminals of the indoor unit and your thermostat may be different system wiring.)
- Do not attach any wires to the R & C Terminals on the Outdoor Unit, as they are not needed for inverter unit.
- Data line terminal #1 from outdoor unit must connect to terminal #1 on indoor unit and thermostat and data line terminal #2 from outdoor unit must connect to terminal #2 on indoor unit and thermostat. *Verify wires are not reversed.*

01_EN_DNA_FIT_Goodman.indd 25 2024/06/11 15:21:53

System Service and Decommissioning

When removing refrigerant from a system, either for servicing or decommissioning, it is recommended good practice that all refrigerants are removed safely. When transferring refrigerant into cylinders, ensure that only appropriate refrigerant recovery cylinders are employed. Ensure that the correct number of cylinders for holding the total system charge is available. All cylinders to be used are designated for the recovered refrigerant and labelled for that refrigerant (i.e. special cylinders for the recovery of refrigerant). Cylinders shall be complete with pressure-relief valve and associated shut-off valves in good working order. Empty recovery cylinders are evacuated and, if possible, cooled before recovery occurs. The recovery equipment shall be in good working order with a set of instructions concerning the equipment that is at hand and shall be suitable for the recovery of the flammable refrigerant. If in doubt, the manufacturer should be consulted. In addition, a set of calibrated weighing scales shall be available and in good working order. Hoses shall be complete with leak-free disconnect couplings and in good condition.
The recovered refrigerant shall be processed according to local legislation in the correct recovery cylinder, and the relevant waste transfer note arranged. Do not mix refrigerants in recovery units and especially not in cylinders.

Should repairs requiring recovery of the refrigerant become necessary, special considerations must be made when breaking into systems with flammable refrigerants. These repairs shall only be performed by qualified service personnel and in compliance with local and national regulations.

Before carrying out this procedure, it is essential that the technician is completely familiar with the equipment and all its detail. It is recommended good practice that all refrigerants are recovered safely. Prior to the task being carried out, an oil and refrigerant sample shall be taken in case analysis is required prior to re-use of recovered refrigerant. It is essential that electrical power is available before the task is commenced.

a) Become familiar with the equipment and its operation.
b) Isolate system electrically.
c) Before attempting the procedure, ensure that:

- Mechanical handling equipment is available, if required, for handling refrigerant cylinders;
- All personal protective equipment is available and being used correctly;
- The recovery process is supervised at all times by a competent person;
- Recovery equipment and cylinders conform to the appropriate standards.

d) Pump down refrigerant system, if possible.
e) If a vacuum is not possible, make a manifold so that refrigerant can be removed from various parts of the system.
f) Make sure that cylinder is situated on the scales before recovery takes place.
g) Start the recovery machine and operate in accordance with instructions.
h) Do not overfill cylinders (no more than 80 % volume liquid charge).
i) Do not exceed the maximum working pressure of the cylinder, even temporarily.
j) When the cylinders have been filled correctly and the process completed, make sure that the cylinders and the equipment are removed from site promptly and all isolation valves on the equipment are closed off.
k) Recovered refrigerant shall not be charged into another REFRIGERATING SYSTEM unless it has been cleaned and checked.

The refrigerant charge shall only be recovered into a cylinder labeled for use with R32. Ensure that the refrigerant cylinder(s) are capable of holding the total system charge. Cylinders shall be complete with a pressure-relief valve and associated shut-off valves in good working order. Empty recovery cylinders are evacuated and, if possible, cooled before recovery occurs. A set of calibrated weighing scales shall be available and in good working order. Hoses shall be complete with leak-free disconnect couplings and in good condition.

All best practices for refrigerant recovery must be followed, including use of a recovery machine designated safe for use with A2L refrigerants. Isolate the system electrically prior to recovery. Ensure that all personal protective equipment is being applied correctly. Ensure that the recovery process is supervised at all times by the qualified servicer. Situate the R32 cylinder on the scale before recovery takes place. Start the recovery machine and operate in accordance with its instructions. Do not overfill cylinders by more than 80% volume of its allowed liquid charge.

Should electrical components need to be replaced, ensure that the original equipment manufacturer's part or equivalent is used.

Markings and warnings on the unit shall continue to be visible and legible after installation and service. Correct any markings and warnings that are made illegible.

When decommissioning a system, all previously mentioned precautions regarding safe refrigerant handling must be followed. Recovered refrigerant shall not be charged into another refrigerating system unless it has been cleaned and checked. Equipment must be labeled, dated, and signed stating that it has been decommissioned and emptied of refrigerant. For appliances containing FLAMMABLE REFRIGERANTS, ensure that there are labels on the equipment stating the equipment contains FLAMMABLE REFRIGERANT.

01_EN_DNA_FIT_Goodman.indd 26 2024/05/14 20:04:23

STEP 1. CALCULATE REFRIGERANT CHARGE BASED ON LINE SET LENGTH

The outdoor unit is shipped with a predetermined factory charge level as shown below. Please follow below step. Refer to the following page for the equivalent length of the elbow fittings.

Total Refrigerant Charge (A) = **Factory Charge (B)*** + **Additional Charge for line set (C)**

(A) to (C) parameters are shown in below table.

The following table shows refrigerant amount for every 5 feet of line. Choose connected indoor coil type, Liquid/Suction pipe diameter and line set length. Calculate charge amount by linear approximation in between line set length mentioned below table.

* Factory Charge (B) may differ from the value specified on the unit name plate.
  In that case, calculate the Additional Charge (C) as to keep the Total Refrigerant Charge (A) indicated in the table.

Charge Table for Total Refrigerant (A)

AC/HP	Total/Additional refrigerant (oz.)																			
	1.5 ton model												2.0 ton model							
Indoor Unit type	CAPEA, CHPEA, AHVE																			
Liquid Pipe Diameter(inch)	1/4"				5/16"				**3/8"**				5/16"				**3/8"**			
Suction Pipe Diameter(inch)	5/8"		3/4"		5/8"		3/4"		5/8"		**3/4"**		5/8"		3/4"		5/8"		**3/4"**	
Actual Line Set Length(ft.)	(A)	(C)	(A)	(C)	(A)	(C)	(A)	(C)	(A)	(C)	(A)	(C)	(A)	(C)	(A)	(C)	(A)	(C)	(A)	(C)
15 or less	n/a		n/a		n/a		n/a		73*	0	**73**	0	n/a		n/a		73*	0	**73**	0
20			74*	1			75	2	76	3	76	3			75	2	76	3	76	3
25			75	2	76	3	77	4	78	5	78	5	76	3	77	4	78	5	78	5
30	76*	3	77	4	78	5	80	7	81	8	83	10	78	5	80	7	81	8	83	10
35	77*	4	78	5	80	7	82	9	83	10	87	14	80	7	82	9	83	10	87	14
40	79	6	79	6	82	9	84	11	86	13	90	17	82	9	84	11	86	13	90	17
45	80	7	80	7	83	10	86	13	89	16	94	21	83	10	86	13	89	16	94	21
50	81	8	82	9	85	12	89	16	91	18	97	24	85	12	89	16	91	18	97	24
55	82	9	83	10	87	14	91	18	94	21	99	26	87	14	91	18	94	21	99	26
60	83	10	84	11	89	16	93	20	96	23	102	29	89	16	93	20	96	23	102	29
65	84	11	85	12	90	17	95	22	99	26	106	33	90	17	95	22	99	26	106	33
70	85	12	87	14	92	19	98	25	102	29	109	36	92	19	98	25	102	29	109	36
75	86	13	88	15	94	21	100	27	104	31	112	39	94*	21	100*	27	104	31	112	39
80	88	15	89	16	96	23	102	29	107	34	115	42	n/a		n/a		107	34	115	42
85	89	16	90	17	97	24	104	31	109	36	119	46					109	36	119	46
90	90	17	92	19	99	26	106	33	112	39	122	49					112	39	122	49
95	91	18	93	20	101	28	109	36	115	42	125	52					115	42	125	52
100	92	19	94	21	103	30	111	38	117	44	128	55					117	44	128	55

Factory Charge (B)

Standard Diameter
(For replacement installation)

*: Offered in HP models only.

01_EN_DNA_FIT_Goodman.indd 27 2024/06/11 15:21:53

AC/HP	Total/Additional refrigerant (oz.)															
	2.5 ton model								3.0 ton model							
Indoor Unit type	CAPEA, CHPEA, AHVE															
Liquid Pipe Diameter(inch)	5/16"				**3/8"**				5/16"				**3/8"**			
Suction Pipe Diameter(inch)	3/4"		7/8"		3/4"		**7/8"**		3/4"		7/8"		3/4"		**7/8"**	
Actual Line Set Length(ft.)	(A)	(C)	(A)	(C)	(A)	(C)	(A)	(C)	(A)	(C)	(A)	(C)	(A)	(C)	(A)	(C)
15 or less	n/a		n/a		75*	0	**75**	0	n/a		n/a		81*	0	**81**	0
20			77	2	78	3	78	3			83	2	84	3	84	3
25	79	4	79	4	80	5	81	6	85	4	85	4	87	6	88	7
30	81	6	81	6	83	8	85	10	87	6	87	6	89	8	91	10
35	82	7	83	8	86	11	88	13	89	8	89	8	92	11	94	13
40	84	9	85	10	89	14	91	16	90	9	91	10	95	14	97	16
45	86	11	88	13	91	16	95	20	92	11	94	13	98	17	101	20
50	88	13	90	15	94	19	98	23	94	13	96	15	100	19	104	23
55	90	15	92	17	97	22	101	26	96	15	98	17	103	22	106	25
60	92	17	94	19	100	25	105	30	98	17	100	19	106	25	109	28
65	94	19	96	21	102	27	108	33	100	19	102	21	109	28	113	32
70	96	21	98	23	105	30	111	36	102	21	104	23	111	30	116	35
75	97*	22	100*	25	108	33	114	39	104*	23	106*	25	114	33	119	38
80	n/a		n/a		111	36	118	43	n/a		n/a		117	36	122	41
85					113	38	121	46					120	39	125	44
90					116	41	124	49					122	41	128	47
95					119	44	127	52					125	44	131	50
100					121	46	131	56					128	47	135	54

Factory Charge (B)

Standard Diameter
(For replacement installation)

*: Offered in HP models only.

AC/HP	Total/Additional refrigerant (oz.)											
	2.0 ton Enhanced Capacity/High Efficiency model								3.0 ton Enhanced Capacity/High Efficiency model			
Indoor Unit type	CAPEA, CHPEA, AHVE								CAPEA, CHPEA, AHVE			
Liquid Pipe Diameter(inch)	5/16"				**3/8"**				**3/8"**			
Suction Pipe Diameter(inch)	3/4"		7/8"		3/4"		**7/8"**		7/8"		**1-1/8"**	
Actual Line Set Length(ft.)	(A)	(C)	(A)	(C)	(A)	(C)	(A)	(C)	(A)	(C)	(A)	(C)
15 or less	n/a		n/a		75*	0	**75**	0	n/a		**99**	0
20			77	2	78	3	78	3	102	3	103	4
25	79	4	79	4	80	5	81	6	105	6	106	7
30	81	6	81	6	83	8	85	10	107	8	110	11
35	82	7	83	8	86	11	88	13	110	11	112	13
40	84	9	85	10	89	14	91	16	113	14	116	17
45	86	11	88	13	91	16	95	20	116	17	119	20
50	88	13	90	15	94	19	98	23	118	19	122	23
55	90	15	92	17	97	22	101	26	121	22	125	26
60	92	17	94	19	100	25	105	30	124	25	129	30
65	94	19	96	21	102	27	108	33	127	28	132	33
70	96	21	98	23	105	30	111	36	130	31	135	36
75	97*	22	100*	25	108	33	114	39	132	33	139	40
80	n/a		n/a		111	36	118	43	135	36	142	43
85					113	38	121	46	138	39	145	46
90					116	41	124	49	141	42	149	50
95					119	44	127	52	144	45	152	53
100					121	46	131	56	146	47	155	56

Factory Charge (B)

Standard Diameter
(For replacement installation)

*: Offered in HP models only.

01_EN_DNA_FIT_Goodman.indd 28 2024/06/11 15:21:54

AC/HP	Total/Additional refrigerant (oz.)							
	3.5 - 4.0 ton model				5.0 ton model			
Indoor Unit type	CAPEA, CHPEA, AHVE							
Liquid Pipe Diameter(inch)	**3/8"**				**3/8"**			
Suction Pipe Diameter(inch)	7/8"		**1-1/8"**		7/8"		**1-1/8"**	
Actual Line Set Length(ft.)	(A)	(C)	(A)	(C)	(A)	(C)	(A)	(C)
15 or less	n/a		**99**	0	n/a		**118**	0
20	102	3	103	4	121	3	122	4
25	105	6	106	7	124	6	124	6
30	107	8	110	11	127	9	130	12
35	110	11	112	13	130	12	135	17
40	113	14	116	17	132	14	139	21
45	116	17	119	20	135	17	143	25
50	118	19	122	23	138	20	147	29
55	121	22	125	26	141	23	150	32
60	124	25	129	30	144	26	154	36
65	127	28	132	33	147	29	158	40
70	130	31	135	36	150	32	161	43
75	132	33	139	40	153	35	165	47
80	135	36	142	43	156	38	169	51
85	138	39	145	46	158	40	173	55
90	141	42	149	50	161	43	177	59
95	144	45	152	53	164	46	181	63
100	146	47	155	56	167	49	185	67

Factory Charge (B)

Standard Diameter
(For replacement installation)

AC/HP	Total/Additional refrigerant (oz.)							
	3.5 ton Enhanced Capacity/High Efficiency model				4.0 ton Enhanced Capacity/High Efficiency model			
Indoor Unit type	CAPEA, CHPEA, AHVE							
Liquid Pipe Diameter(inch)	**3/8"**				**3/8"**			
Suction Pipe Diameter(inch)	7/8"		**1-1/8"**		7/8"		**1-1/8"**	
Actual Line Set Length(ft.)	(A)	(C)	(A)	(C)	(A)	(C)	(A)	(C)
15 or less	n/a		**118**	0	n/a		**118**	0
20	121	3	122	4	121	3	122	4
25	124	6	124	6	124	6	124	6
30	127	9	130	12	127	9	130	12
35	130	12	135	17	130	12	135	17
40	132	14	139	21	132	14	139	21
45	135	17	143	25	135	17	143	25
50	138	20	147	29	138	20	147	29
55	141	23	150	32	141	23	150	32
60	144	26	154	36	144	26	154	36
65	147	29	158	40	147	29	158	40
70	150	32	161	43	150	32	161	43
75	153	35	165	47	153	35	165	47
80	156	38	169	51	156	38	169	51
85	158	40	173	55	158	40	173	55
90	161	43	177	59	161	43	177	59
95	164	46	181	63	164	46	181	63
100	167	49	185	67	167	49	185	67

Factory Charge (B)

Standard Diameter
(For replacement installation)

01_EN_DNA_FIT_Goodman.indd 29 2024/06/11 15:21:54

Step 2. Charge By Lineset Length

⚠ CAUTION

Ensure valves are open and additional charge is added per chart before applying power.

Charge additional refrigerant calculated by the equation & table in Step 1.

After the refrigerant charge has bled into the indoor unit, open the liquid service valve. The service valve cap is the secondary seal for the valves and must be properly tightened to prevent leaks. Make sure cap is clean and apply refrigerant oil to threads and sealing surface on inside of cap. Tighten cap finger-tight and then tighten additional 1/6 of a turn to properly seat the sealing surfaces.

Break vacuum by fully opening liquid and suction base valve.

NOTE: 1.5 - 3.0 ton model and 2.0 ton Enhanced Capacity/ High Efficiency model only have front seating valves. 3.5 - 5.0 ton model and 3.0 - 4.0 ton Enhanced Capacity/High Efficiency model only have front / back seating valve. Refer detail function on page 21. It is not necessary to force the stem tightly against the rolled lip.

Step 3. System Start-up Test

For a detailed procedure, please visit the Goodman HVAC website at https://www.goodmanmfg.com/products/controls

NOTICE

On initial power startup, the OUTDOOR UNIT will display code E11, signaling that initial SYSTEM test must be run. Charge verification test may be selected from thermostat directly instead of System test. This will result in system test being run followed by charge verification test (if system test successful). Follow the goodman communicating thermostat setup screen to enter application-unique information. See goodman communicating thermostat manual for detailed information.

A system test is now required to check the equipment settings and functionality. Once selected, it checks the equipment for approximately 5-7 mins. Thermostat will notify upon successful completion of system test. Refer to the Troubleshooting section, if error code appears. Once error is fixed, stop and re-start system test.

Before starting the SYSTEM TEST, turn off the electric heater or gas furnace.

Additional Charge Adjusting Procedure

Step 4. Measure Subcooling to Verify Proper Charge

Set thermostat to charge verification test

If required additional charging amount cannot be charged to the system without operation, then use this “CHARGE VERIFICATION TEST”.

When adjusting “Sub cooling”, use this “CHARGE VERIFICATION TEST”.

CHARGE VERIFICATION TEST allows for charging of the system. System operates for a duration of approximately two hours while the equipment runs at approximately 50% capacity. After two hours, the CHARGE VERIFICATION TEST ends and the system resumes normal thermostat operation.

Before starting the CHARGE VERIFICATION TEST, turn off the electric heater.

Confirm indoor airflow and static are within tolerance before verifying subcooling measurement.

NOTE: Charging equipment must use dedicated PVE oil gauges and hoses.

1. Purge gauge lines.
2. Connect service gauge manifold to liquid base valve service ports.
3. Convert the liquid pressure to temperature using a temperature/pressure chart.
4. Temporarily install a thermometer on the liquid line at the liquid line service valve.
   Ensure the thermometer makes adequate contact and is insulated for best possible readings.
5. Subtract the liquid line temperature from the converted liquid pressure to determine subcooling.
6. Before starting the subcooling adjustment, make sure the outdoor ambient temperature is in the range shown in charging table. The unit will be ready for charging in about 20-25 minutes from starting charge verification test. Once system is stable, thermostat will display the previous 5 minutes average subcooling value, which will be refreshed every minute. In addition, the seven segment display on the unit PCB will show “cha” and previous 5 minutes average subcooling value alternately.
7. If the system subcooling is not within the range as shown in the CHARGE VERIFICATION TEST charging table, adjust subcooling according to the following procedure.
   - If subcooling is low, add charge to adjust the subcooling as specified in the following table.
   - If subcooling is high, remove charge to adjust the subcooling as specified in the following table.

NOTE: If the outdoor ambient temperature is not within 65°F-105°F, thermostat display will notify of that, and charge verification will not be allowed. If the system is not in condition after the first 20-25 minutes, a message will be displayed on thermostat stating the reason. Additionally, the seven segment display will keep flashing “cha” in CHARGE VERIFICATION TEST when system is not in condition. Check thermostat display for the cause when this occurs, and refer to service manual for detailed troubleshooting.

NOTE: To achieve rated performance, measure subcooling using a pressure gauge and temperature sensor.

01_EN_DNA_FIT_Goodman.indd 30 2024/06/19 20:30:21

SUBCOOLING = (SAT. LIQUID TEMP.) - (LIQUID LINE TEMP.)

CHARGE VERIFICATION TEST charging table

OD Ambient Temp (degF)		< 65°F	65°F to 105°F					> 105°F
			GXV6SA	GXV6SS	GZV6SA	GZV7SA	GXV9SA	
Subcooling (degF)	1.5 ton	Weigh in charge	7 ± 1°F	7 ± 1°F	7 ± 1°F	-	-	Weigh in charge
	2 ton		*8 ± 1°F	*8 ± 1°F	*8 ± 1°F	8 ± 1°F	8 ± 1°F	
	2.5 ton		8 ± 1°F	8 ± 1°F	8 ± 1°F	-	-	
	3 ton		9 ± 1°F	9 ± 1°F	9 ± 1°F	8 ± 1°F	8 ± 1°F	
	3.5 ton		-	8 ± 1°F	8 ± 1°F	10 ± 1°F	-	
	4 ton		-	8 ± 1°F	8 ± 1°F	10 ± 1°F	10 ± 1°F	
	5 ton		-	10 ± 1°F	10 ± 1°F	-	-	

* 2 ton GXV6SA, GXV6SS, GZV6SA Subcooling target is 10 ± 1˚F for OD Ambient Temp < 80˚F.

NOTE: Above subcooling information is valid ONLY in CHARGE VERIFICATION TEST (Not valid during 100% capacity operation)

NOTE: Below "Full capacity charging table" is valid ONLY when system is operating at 100% capacity (Not valid during CHARGE VERIFICATION TEST)

Full capacity charging table

OD Ambient Temp (degF)		< 65°F	65°F to 105°F					> 105°F
			GXV6SA	GXV6SS	GZV6SA	GZV7SA	GXV9SA	
Subcooling (degF)	1.5 ton	Weigh in charge	10 ± 1°F	10 ± 1°F	10 ± 1°F	-	-	Weigh in charge
	2 ton		12 ± 1°F	12 ± 1°F	12 ± 1°F	14 ± 1°F	14 ± 1°F	
	2.5 ton		14 ± 1°F	14 ± 1°F	14 ± 1°F	-	-	
	3 ton		13 ± 1°F	15 ± 1°F	15 ± 1°F	8 ± 1°F	8 ± 1°F	
	3.5 ton		-	8 ± 1°F	8 ± 1°F	9 ± 1°F	-	
	4 ton		-	9 ± 1°F	9 ± 1°F	9 ± 1°F	9 ± 1°F	
	5 ton		-	9 ± 1°F	9 ± 1°F	-	-	

NOTE: Not more than 8 oz. of refrigerant be added to the system to achieve the target subcooling. It is recommended adding 1 oz. refrigerant each time, then wait 10 minutes to stabilize the system.

NOTICE

Check the Schrader ports for leaks and tighten valve cores, if necessary. Install caps finger-tight.

NOTICE

Do NOT adjust the charge based on suction pressure.

SATURATED SUCTION PRESSURE TEMPERATURE CHART	
SUCTION PRESSURE	SATURATED SUCTION TEMPERATURE °F
PSIG	R32
40	-7
45	-3
50	1
55	4
60	8
65	11
70	14
75	17
80	20
85	23
90	25
95	28
100	30
105	33
110	35
115	37
120	40
125	42
130	44
135	46
140	48
145	50
150	52
155	53
160	55
165	57
170	59
175	60
180	62
185	64
190	65

SATURATED LIQUID PRESSURE TEMPERATURE CHART	
LIQUID PRESSURE	SATURATED LIQUID TEMPERATURE °F
PSIG	R32
200	68
215	73
230	77
245	81
260	85
275	88
290	92
305	95
320	99
335	102
350	105
365	108
380	111
395	114
410	117
425	119
440	122
455	124
470	127
485	129
500	132
515	134
530	136
545	138
560	141
575	143
590	145
605	147
620	149
635	151
650	153

System Operation

System advanced features

This system permits access to additional system information, advanced set-up features, and advanced diagnostic/troubleshooting features.

These advanced features are organized into a menu structure.

For detailed functions and menu layout, please visit the Goodman Thermostat website at
https://www.goodmanmfg.com/products/controls

Cooling boost mode

COOLING BOOST MODE enables the system to operate at increased compressor speeds in cooling mode to satisfy unusual high loads. COOLING BOOST MODE is initiated by an outdoor temperature sensor located in the outdoor unit. Please note that outdoor unit operational sound levels may increase while the unit is running in COOLING BOOST MODE since compressor speed higher than normal operation is allowed.

01_EN_DNA_FIT_Goodman.indd 31 2024/06/11 15:21:55

NOTE: COOLING BOOST MODE is ON by default and is activated when the outdoor temperature reaches 100°F. COOLING BOOST MODE can be disabled and enabled and the activation temperature adjusted in “COOLING BOOST MODE Temperature”

Heating boost mode (HP model only)

HEATING BOOST MODE enables the system to operate at increased compressor speed while in heating mode, regardless of outdoor ambient temperature. However, maximum compressor speeds only appear in low ambient temperature operation if HEATING BOOST MODE is disabled.

Backup defrost (defrost heat) mode (HP model only)

This mode enables the system to select heating operation during defrost. When this mode is ON, 2nd heating source (Electric Heater or Gas Furnace) is turned on during defrost. This mode is initiated by an outdoor temperature sensor located in the outdoor unit. This mode is activated when the outdoor temperature reaches set point. Also “Always ON” and “OFF” are available.

Maximum defrost interval

This setting enables the system to change timer defrost interval. In the case system needs to have defrost operation more frequently, defrost interval can be changed. The initial setting is 120 min.

Powerful heating mode (HP model only)

POWERFUL HEATING enables the system to increase the supply air temperature when demand is low to satisfy user comfort. This mode decreases indoor CFM and may increase compressor speed.

NOTE: POWERFUL HEATING MODE is OFF by default. It can be activated through the thermostat user menu.

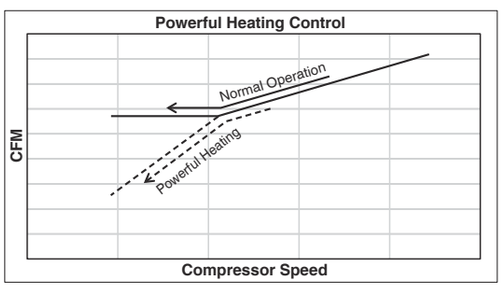

Dehumidification

The thermostat reads the indoor humidity level from the field setting menu and allows the user to set a dehumidification target based on these settings. The thermostat controls the humidity level of the conditioned space using the cooling system. Dehumidification is engaged whenever a cooling demand is present and structural humidity levels are above the target level. When this condition exists the circulating fan output is reduced, increasing system run time, over cooling the evaporator coil and ultimately removing more humidity from the structure than if only in cooling mode.

For effective dehumidification operation:

- Please revise it to read ensure Dehumidification is NOT set to “OFF.”
- If “STD”, system run lower CFM than normal cooling mode.
- In addition, the system can have Enhanced Dehumidification operation in setting “A”, “B” or “C” based on dehumidification demand.

  In the Enhanced Dehumidification the indoor airflow is lower than Standard Dehumidification. Setting “A” allows for the widest compressor range with lower cfm than standard dehumidification. Setting “B” limits compressor operation range and keeps high dehumidification capacity. In setting “C” the system runs fixed at 100% compressor and airflow. See Figure 1.
- Verify the cooling airflow profile (cool profiles) is set to “Profile D”.
- For additional dehumidification control, airflow settings are field adjustable and can be fine-tuned to a value that is comfortable for the application from a range of Cool Airflow Trim.

NOTE: In high humidity environments, sweating on supply ducts, cased coils or air handler cabinets can become an issue in Enhanced Dehumidification operation. It is recommended covering them with 2" fiberglass insulation for these installations.

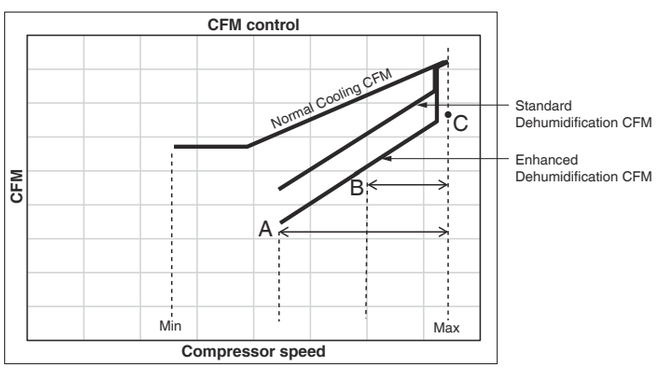

Figure 1

01_EN_DNA_FIT_Goodman.indd 32 2024/06/19 20:30:22

QUIET MODE

QUIET MODE enables the system to operate at decreased compressor and fan speeds to satisfy quiet operation.

QUIET MODE is initiated by user's setting ("ON" or "OFF". Default is "OFF").

NOTE:
"QUIET MODE LEVEL" is initiated by user's setting.

("LEVEL" "1", "2" or "3". Default is "LEVEL" "2". "LEVEL" "3" is the most quiet.)

If the capacity demand is high during operation, QUIET MODE will be temporary shifted to Normal mode by capacity priority function to bring the room temperature to the set point. (Default capacity priority setting is ON)

Capacity priority setting = OFF

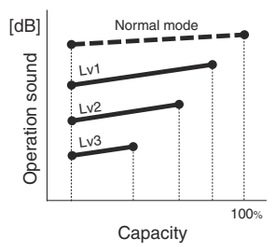

Capacity priority setting = ON

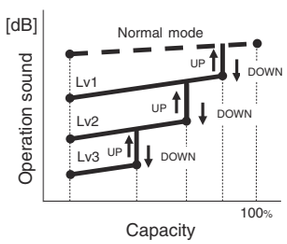

ZONING MODE

ZONING MODE is recommended to use when the zoning controller and dampers are installed. This mode allows the system to run with lower indoor air flow comparing with normal operation when the cool or heat demand is low. The ZONING MODE is disabled in factory default setting. It can be activated through the thermostat user menu and 7-segment display.

CIRCULATION SELECTION

This setting can be used to switch circulation factor ON and OFF to avoid automatically increasing the indoor CFM by circulation control.

When it is ON, the system may increase indoor CFM to circulate indoor air in the event the outdoor control detected low evaporative temperature.

When it is OFF, even if the outdoor control detects low evaporative temperature, it will NOT increase CFM.

ON is recommended generally, but when a zoning controller is connected, it is recommended to be OFF on this setting to avoid unexpected high static pressure.

SET THERMOSTAT TO ADJUST MAXIMUM COMPRESSOR SPEED

Maximum compressor speed at which the outdoor unit will operate can be changed using thermostat. Maximum compressor speed can be changed to get the required capacity or efficiency. Once the maximum speed is set, the system operates between the set maximum speed and default low speed.

SET THERMOSTAT TO ADJUST INDOOR AIR CFM TRIM

User can change the airflow trim at high, intermediate and low compressor speed.

Select:

Cool Airflow trim High: -15% ~ +15%
Cool Airflow trim Intermediate: -15% ~ Full*
Cool Airflow trim Low: -15% ~ Full*
Heat Airflow trim High: -15% ~ +15%
Heat Airflow trim Intermediate: -15% ~ +15%
Heat Airflow trim Low: -15% ~ +15%

Under each trim setting, the airflow can be increased or decreased by a certain percentage.

** The Inverter system uses lower compressor speed and lower indoor unit CFM to optimize system performance.*
To obtain 100% CFM for home circulation, use full Trim setting instead of Int/Low speed.
This is recommended for applications with unusual cold return temperatures such as basements.

NOTE: Trim settings of the following combinations are restricted.

Outdoor Unit	GXV6S*361*A*/GZV6S*361*A*	Trim more than 10% settings are invalid. Trimmed up CFM makes mismatching error.
Indoor Unit	G*VT960403B/0603B G*VM970603B G*VT800603B/0803B MBVK12BP G*VS960603BU	

Outdoor Unit	GXV6S*601*A*/GZV6S*601*A*/ GZV7SA4210A*/GZV7SA4810A*/ GXV9SA4810A*	Trim more than 5% settings are invalid. Trimmed up CFM makes mismatching error.
Indoor Unit	G*VT960804C G*VM970804C G*VT800804C	

Depending on the connected indoor unit, there are restrictions on the positive side Trim setting.
If you want to change the Cool Airflow Trim to positive side, be sure to confirm the Airflow Trim restrictions in the latest indoor unit installation manual.

To see any restriction of added new combination, the latest manual can be obtained from the website "PartnerLink (InfoFinderPlus/Literature)".

[PartnerLink URL]
https://partnerlinkmarketing.goodmanmfg.com/goodman/info-finder-plus

SET THERMOSTAT TO ADJUST INDOOR AIRFLOW PROFILE

The System offers several custom ON/OFF ramping profiles for cooling. These profiles may be used to enhance cooling performance and increase comfort level.

- **Profile A** provides only an OFF delay of one (1) minute at 100% of the cooling demand airflow.

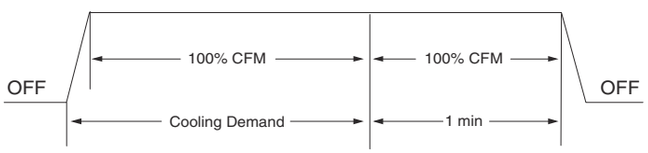

01_EN_DNA_FIT_Goodman.indd 33 2024/06/19 20:30:22

- **Profile B** ramps up to full cooling demand airflow by first stepping up to 50% of the full demand for 30 seconds. The motor then ramps to 100% of the required airflow. A one (1) minute OFF delay at 100% of the cooling airflow.

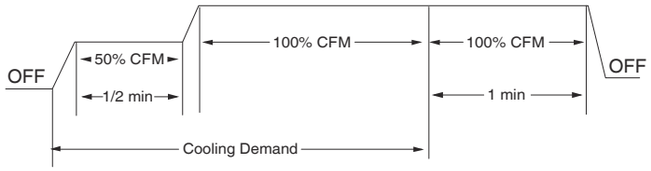

- **Profile C** ramps up to 82% of the full cooling demand airflow and operates there for approximately 7 1/2 minutes. The motor then steps up to the full demand airflow. Profile C also has a one (1) minute 100% OFF delay.

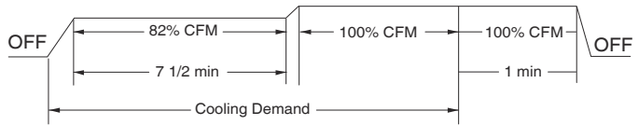

- **Profile D** (default) ramps up to 50% of the demand for 1/2 minute, then ramps to 82% of the full cooling demand airflow and operates there for approximately 7 1/2 minutes. The motor then steps up to the full demand airflow. Profile D has a 1/2 minute at 50% airflow OFF delay.

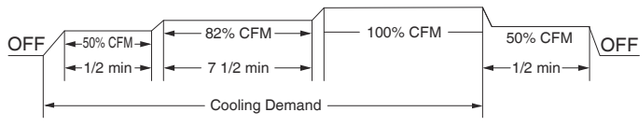

Airflow Tables

SET THERMOSTAT TO ADJUST COOL/HEAT AIRFLOW ON DELAY AND COOL/HEAT AIRFLOW OFF DELAY

Select “Cool/Heat Airflow ON Delay” or “Cool/Heat Airflow OFF Delay”. Check the installation manual of the indoor unit for more details.

It change fan delay for set duration from normal operation.

SET THERMOSTAT TO CHECK SYSTEM STATUS

Status menu displays information about the systems current status.

This menu can be utilized to confirm correct functionality of the equipment and for troubleshooting purposes

HEAT PUMP WITH OUTDOOR TEMPERATURE LOCKOUTS

It is recommended to set the outdoor temperature lockouts during the initial thermostat set up. Heat pump lockout temp will enable the compressor to be turned off and switch heating source from refrigeration to auxiliary/secondary heating under low outdoor ambient conditions.

Aux heat lockout temp will enable auxiliary/secondary heating to be turned off when outdoor temperature is higher than the aux heat lockout temp.

ELECTRONIC LEAK DETECTOR

Electronic leak detectors may be used during the follow up leak test after charging and commissioning.

Leak detector shall have a sensitivity of 5 grams per year of refrigerant or better under a pressure of at least 0.25 times the maximum allowable pressure. If you wish to use a leak detector.

Electronic leak detectors may be used to detect refrigerant leaks but, in the case of FLAMMABLE REFRIGERANTS, the sensitivity may not be adequate, or may need re-calibration. It should be calibrated to the percentage corresponding to 25% of the LFL (Lower flammability limit) of R32. (Detection equipment shall be calibrated in a refrigerant-free area.) Ensure that the detector is not a potential source of ignition and is suitable for the refrigerant used. Leak detection equipment shall be set at a percentage of the LFL of the refrigerant and shall be calibrated to the refrigerant employed, and the appropriate percentage of gas (25% maximum) is confirmed.

01_EN_DNA_FIT_Goodman.indd 34 2024/07/01 16:54:03

WIRING DIAGRAM

GZV6S*181 • 241 • 301 • 361*: 3D141596

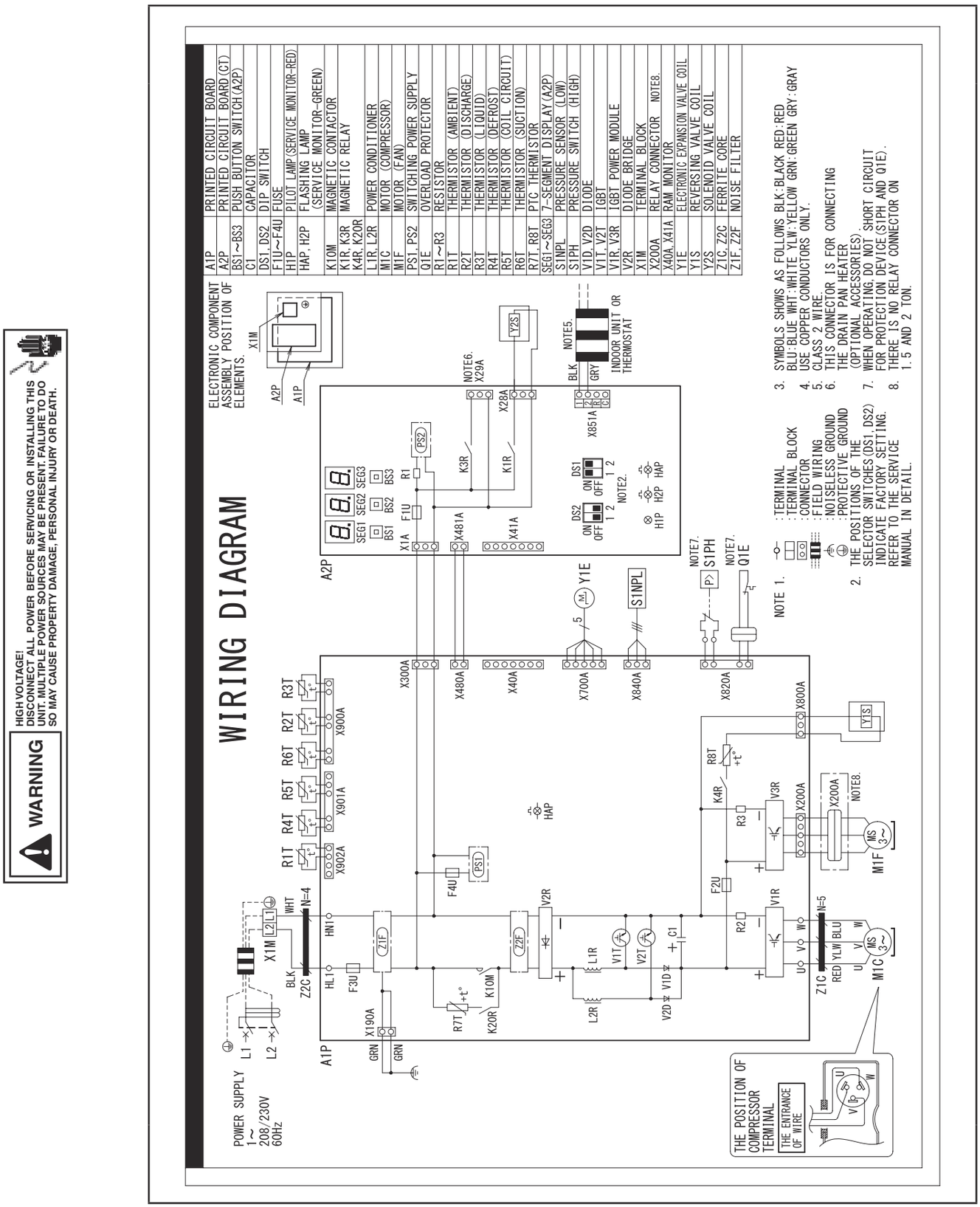

Wiring is subject to change. Always refer to the wiring diagram on the unit for the most up-to-date wiring.

01_EN_DNA_FIT_Goodman.indd 35 2024/05/14 20:04:26

GZV6S*421 • 481 • 601*: 3D151775

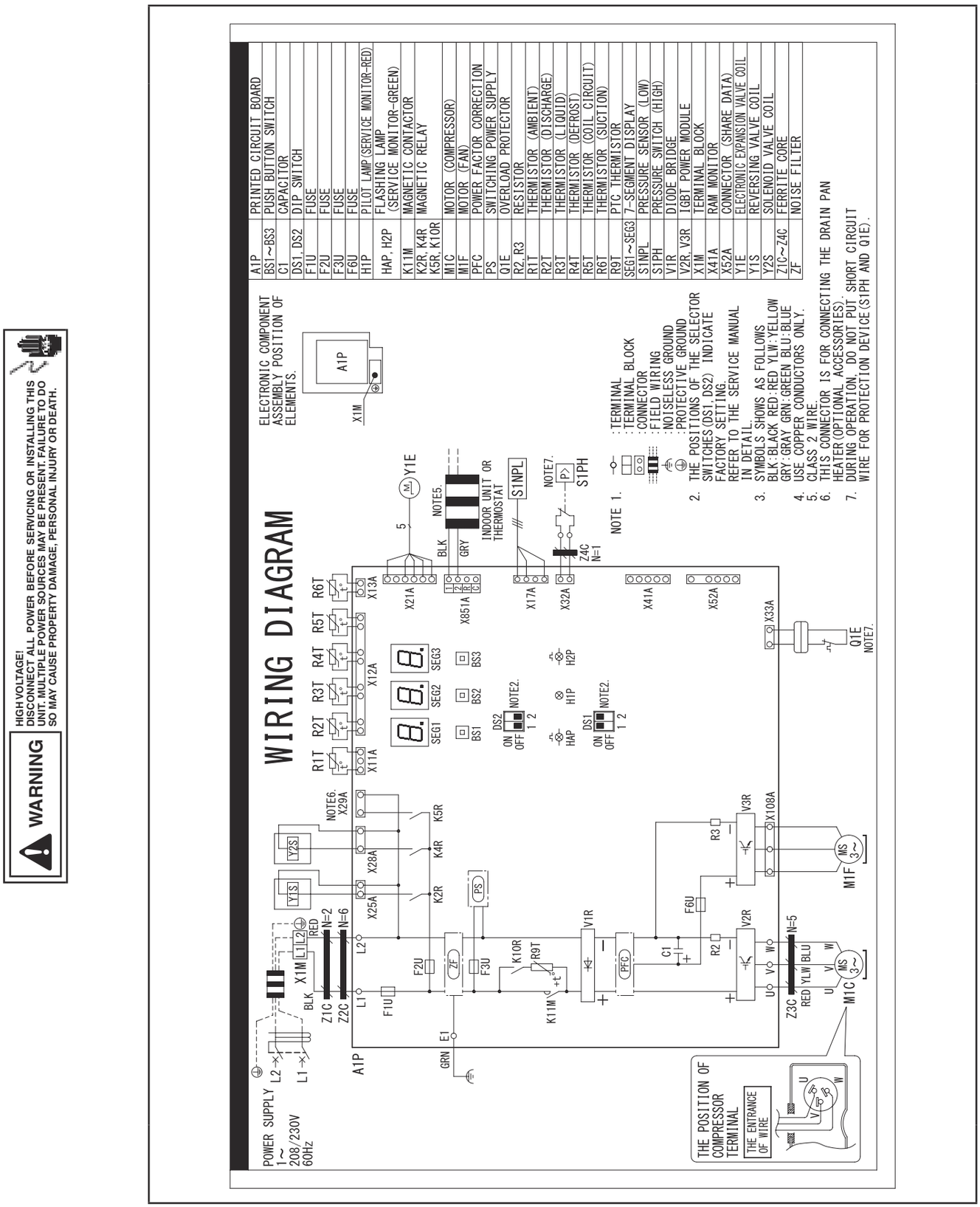

Wiring is subject to change. Always refer to the wiring diagram on the unit for the most up-to-date wiring.

01_EN_DNA_FIT_Goodman.indd 36 2024/05/14 20:04:27

GXV6S*181 • 241 • 301 • 361*: 3D141597

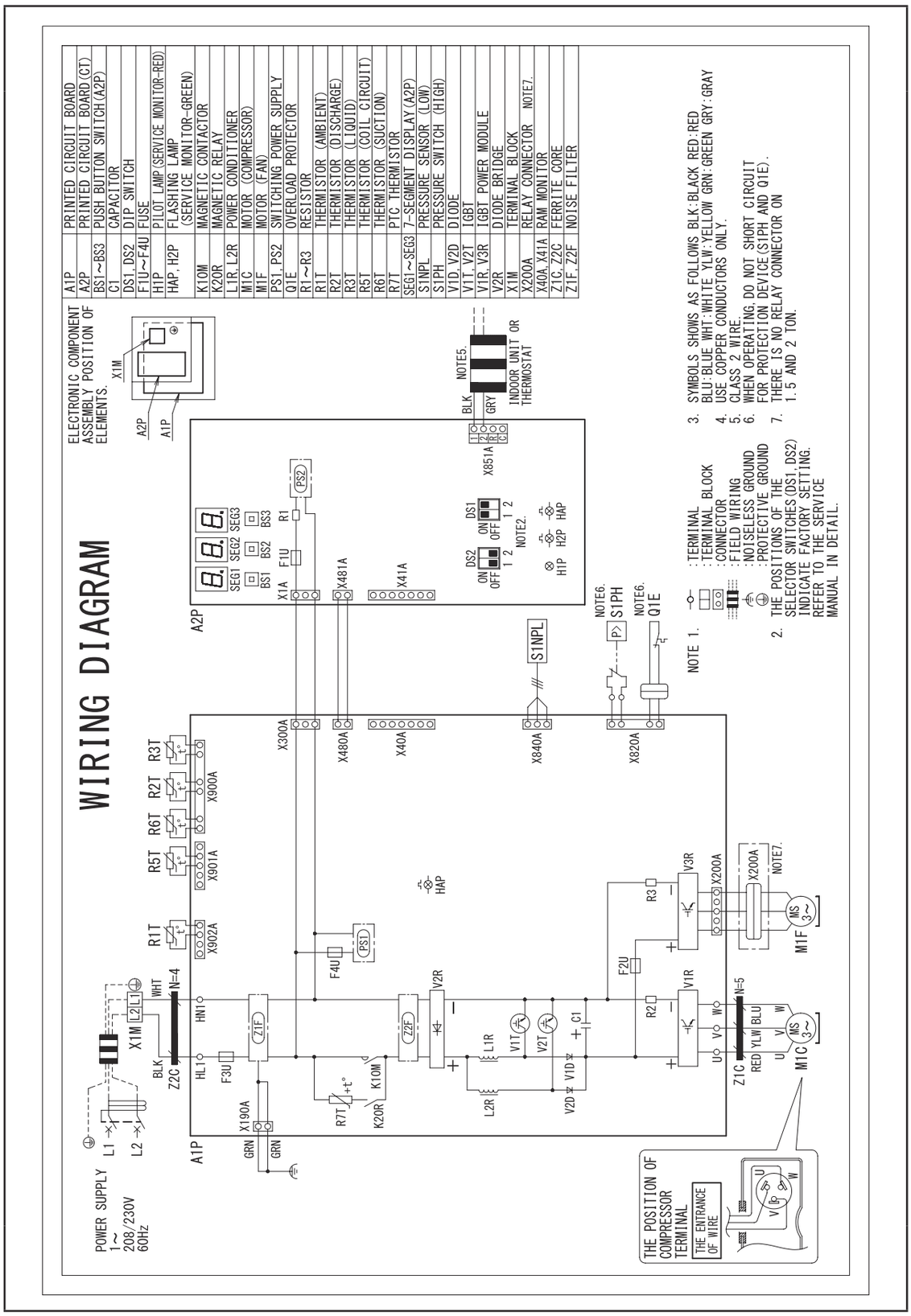

WARNING

HIGH VOLTAGE!
DISCONNECT ALL POWER BEFORE SERVICING OR INSTALLING THIS UNIT. MULTIPLE POWER SOURCES MAY BE PRESENT. FAILURE TO DO SO MAY CAUSE PROPERTY DAMAGE, PERSONAL INJURY OR DEATH.

Wiring is subject to change. Always refer to the wiring diagram on the unit for the most up-to-date wiring.

01_EN_DNA_FIT_Goodman.indd 37 2024/05/14 20:04:28

GXV6S*421 • 481 • 601*: 3D151774

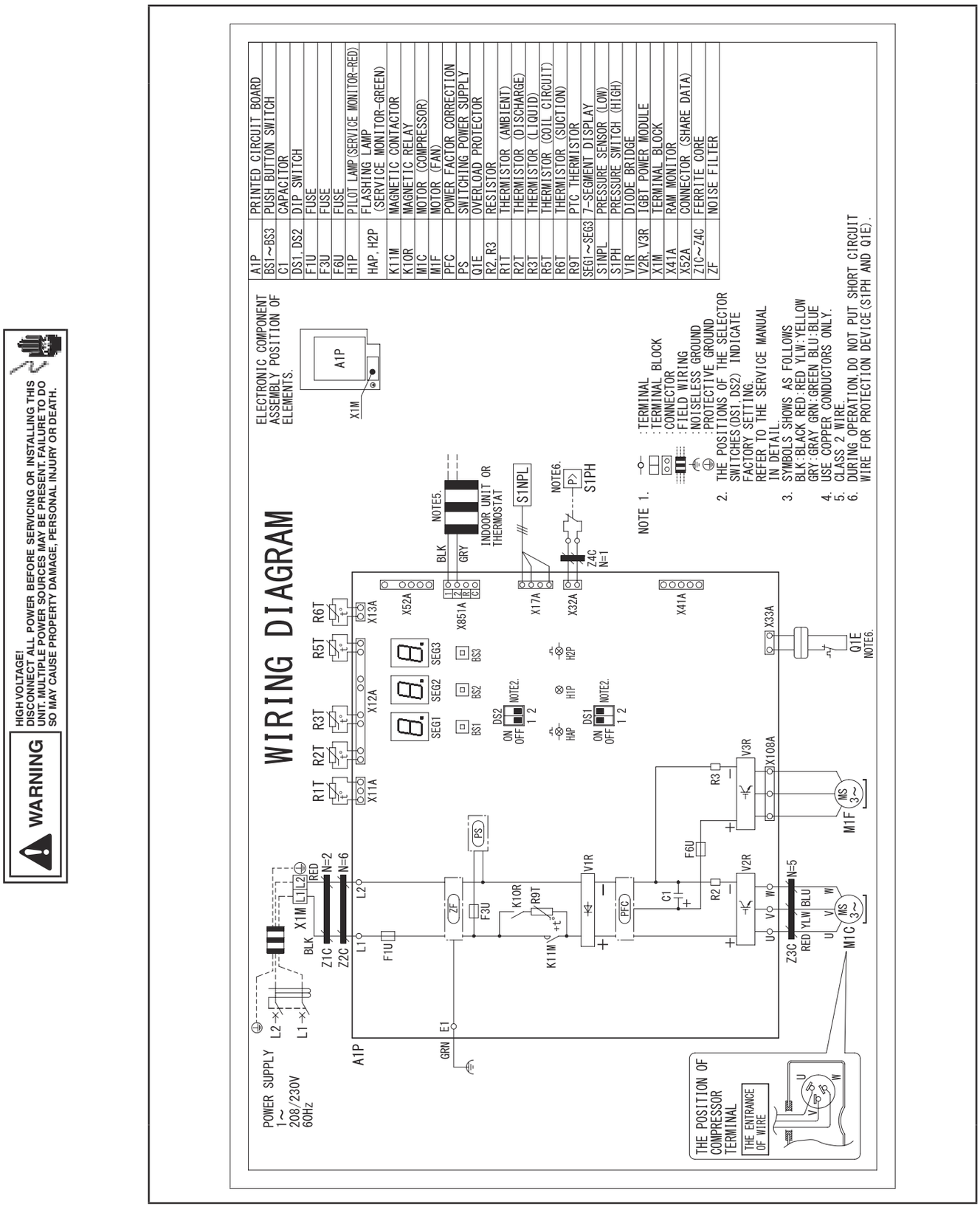

Wiring is subject to change. Always refer to the wiring diagram on the unit for the most up-to-date wiring.

01_EN_DNA_FIT_Goodman.indd 38 2024/05/14 20:04:28

WARNING

HIGH VOLTAGE!
DISCONNECT ALL POWER BEFORE SERVICING OR INSTALLING THIS UNIT. MULTIPLE POWER SOURCES MAY BE PRESENT. FAILURE TO DO SO MAY CAUSE PROPERTY DAMAGE, PERSONAL INJURY OR DEATH.

WIRING DIAGRAM

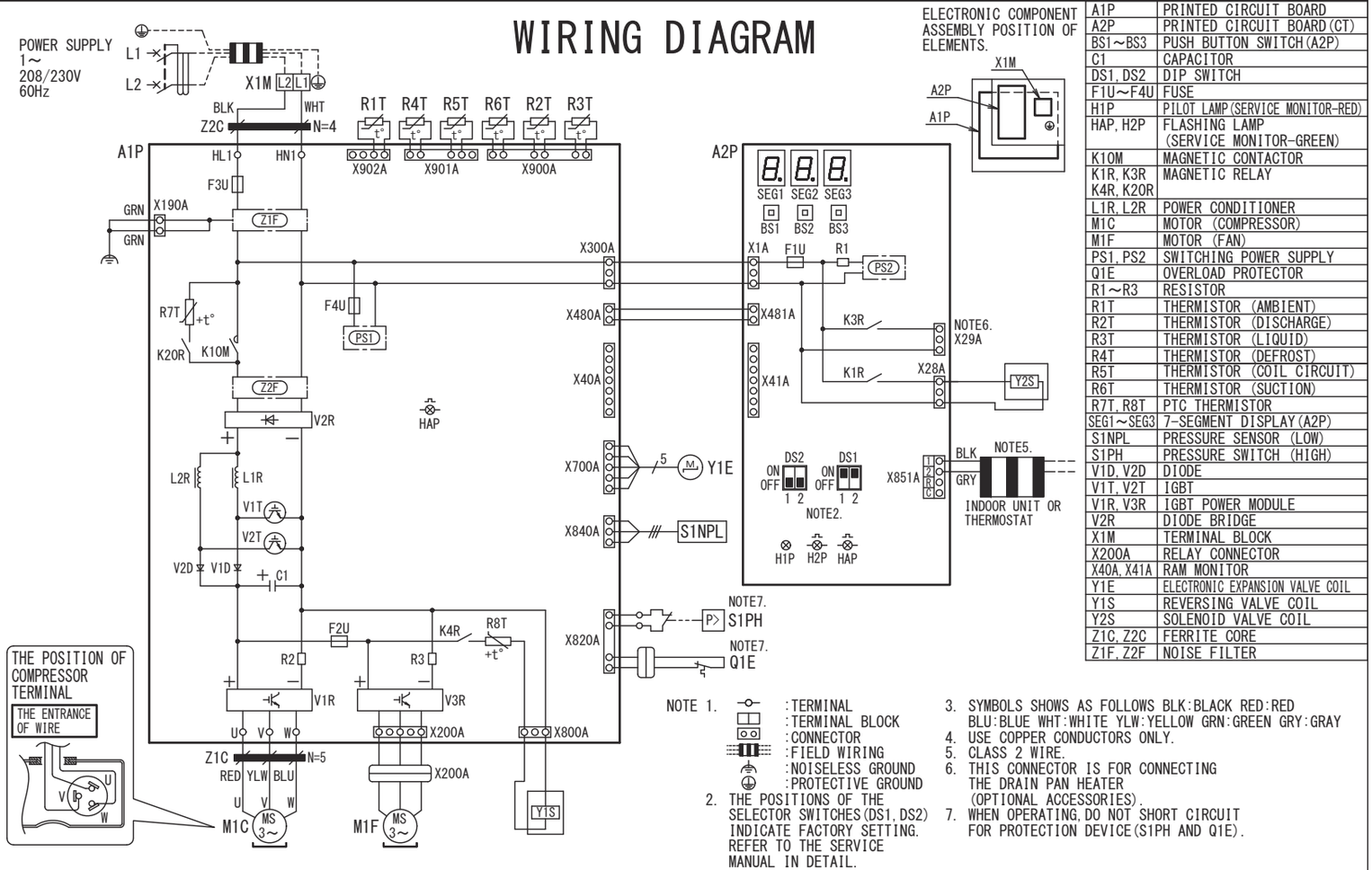

A1P	PRINTED CIRCUIT BOARD
A2P	PRINTED CIRCUIT BOARD(CT)
BS1～BS3	PUSH BUTTON SWITCH(A2P)
C1	CAPACITOR
DS1, DS2	DIP SWITCH
F1U～F4U	FUSE
H1P	PILOT LAMP(SERVICE MONITOR-RED)
HAP, H2P	FLASHING LAMP (SERVICE MONITOR-GREEN)
K10M	MAGNETIC CONTACTOR
K1R, K3R K4R, K20R	MAGNETIC RELAY
L1R, L2R	POWER CONDITIONER
M1C	MOTOR (COMPRESSOR)
M1F	MOTOR (FAN)
PS1, PS2	SWITCHING POWER SUPPLY
Q1E	OVERLOAD PROTECTOR
R1～R3	RESISTOR
R1T	THERMISTOR (AMBIENT)
R2T	THERMISTOR (DISCHARGE)
R3T	THERMISTOR (LIQUID)
R4T	THERMISTOR (DEFROST)
R5T	THERMISTOR (COIL CIRCUIT)
R6T	THERMISTOR (SUCTION)
R7T, R8T	PTC THERMISTOR
SEG1～SEG3	7-SEGMENT DISPLAY(A2P)
S1NPL	PRESSURE SENSOR (LOW)
S1PH	PRESSURE SWITCH (HIGH)
V1D, V2D	DIODE
V1T, V2T	IGBT
V1R, V3R	IGBT POWER MODULE
V2R	DIODE BRIDGE
X1M	TERMINAL BLOCK
X200A	RELAY CONNECTOR
X40A, X41A	RAM MONITOR
Y1E	ELECTRONIC EXPANSION VALVE COIL
Y1S	REVERSING VALVE COIL
Y2S	SOLENOID VALVE COIL
Z1C, Z2C	FERRITE CORE
Z1F, Z2F	NOISE FILTER

NOTE 1. :TERMINAL
:TERMINAL BLOCK
:CONNECTOR
:FIELD WIRING
:NOISELESS GROUND
:PROTECTIVE GROUND

2. THE POSITIONS OF THE SELECTOR SWITCHES(DS1, DS2) INDICATE FACTORY SETTING. REFER TO THE SERVICE MANUAL IN DETAIL.
3. SYMBOLS SHOWS AS FOLLOWS BLK:BLACK RED:RED BLU:BLUE WHT:WHITE YLW:YELLOW GRN:GREEN GRY:GRAY
4. USE COPPER CONDUCTORS ONLY.
5. CLASS 2 WIRE.
6. THIS CONNECTOR IS FOR CONNECTING THE DRAIN PAN HEATER (OPTIONAL ACCESSORIES).
7. WHEN OPERATING, DO NOT SHORT CIRCUIT FOR PROTECTION DEVICE(S1PH AND Q1E).

01_EN_DNA_FIT_Goodman. indd 39 2024/05/14 20:04:29

GZV7SA361 • 421 • 4810, GXV9SA361·4810: 3D151775

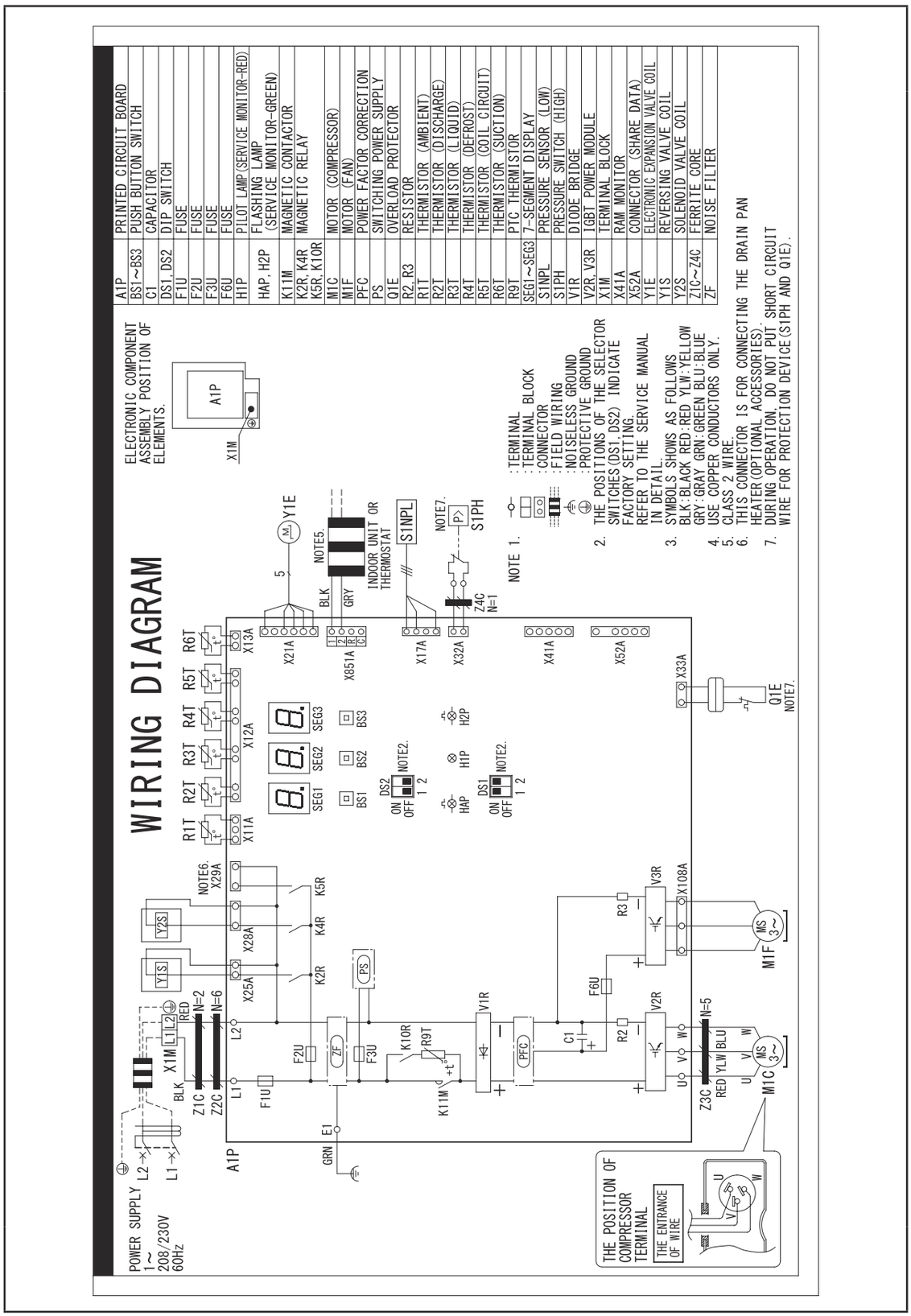

WARNING

HIGH VOLTAGE!
DISCONNECT ALL POWER BEFORE SERVICING OR INSTALLING THIS UNIT. MULTIPLE POWER SOURCES MAY BE PRESENT. FAILURE TO DO SO MAY CAUSE PROPERTY DAMAGE, PERSONAL INJURY OR DEATH.

Wiring is subject to change. Always refer to the wiring diagram on the unit for the most up-to-date wiring.

01_EN_DNA_FIT_Goodman.indd 40 2024/05/14 20:04:30

TESTING CAPACITOR RESISTANCE

⚠ WARNING

AVOID CONTACT WITH THE CHARGED AREA.

- **NEVER TOUCH THE CHARGED AREA BEFORE CONFIRMING THAT THE RESIDUAL VOLTAGE IS 50 VOLTS OR LESS.**

1. **SHUT DOWN THE POWER AND LEAVE THE CONTROL BOX FOR 10 MINUTES.**
2. **MAKE SURE TO TOUCH THE EARTH GROUND TERMINAL TO RELEASE THE STATIC ELECTRICITY FROM YOUR BODY (TO PREVENT FAILURE OF THE PC BOARD).**
3. **MEASURE THE RESIDUAL VOLTAGE IN THE SPECIFIED MEASUREMENT POSITION USING A VOM WHILE PAYING ATTENTION NOT TO TOUCH THE CHARGED AREA.**
4. **IMMEDIATELY AFTER MEASURING THE RESIDUAL VOLTAGE, DISCONNECT THE CONNECTORS OF THE OUTDOOR UNIT'S FAN MOTOR. (IF THE FAN BLADE ROTATES BY STRONG WIND BLOWING AGAINST IT, THE CAPACITOR WILL BE CHARGED, CAUSING THE DANGER OF ELECTRICAL SHOCK.)**

<1.5 - 3.0 ton model and 2.0 ton Enhanced Capacity/High Efficiency model>

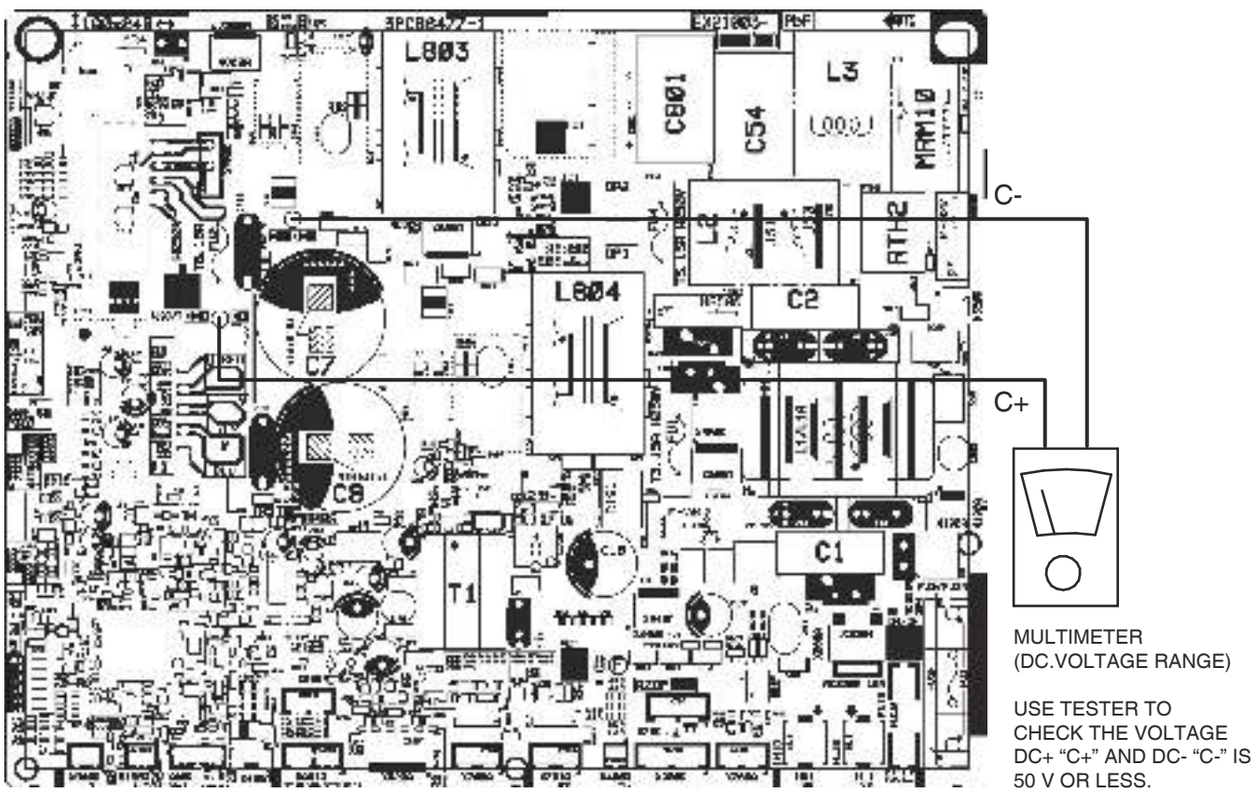

Capacitor Voltage

01_EN_DNA_FIT_Goodman.indd 41 2024/06/11 15:21:56

⚠ WARNING

AVOID CONTACT WITH THE CHARGED AREA.

- **NEVER TOUCH THE CHARGED AREA BEFORE CONFIRMING THAT THE RESIDUAL VOLTAGE IS 50 VOLTS OR LESS.**

1. **SHUT DOWN THE POWER AND LEAVE THE CONTROL BOX FOR 10 MINUTES.**
2. **MAKE SURE TO TOUCH THE EARTH GROUND TERMINAL TO RELEASE THE STATIC ELECTRICITY FROM YOUR BODY (TO PREVENT FAILURE OF THE PC BOARD).**
3. **MEASURE THE RESIDUAL VOLTAGE IN THE SPECIFIED MEASUREMENT POSITION USING A VOM WHILE PAYING ATTENTION NOT TO TOUCH THE CHARGED AREA.**
4. **IMMEDIATELY AFTER MEASURING THE RESIDUAL VOLTAGE, DISCONNECT THE CONNECTORS OF THE OUTDOOR UNIT'S FAN MOTOR. (IF THE FAN BLADE ROTATES BY STRONG WIND BLOWING AGAINST IT, THE CAPACITOR WILL BE CHARGED, CAUSING THE DANGER OF ELECTRICAL SHOCK.)**

<3.5 - 5.0 ton model and 3.0 - 4.0 ton Enhanced Capacity/High Efficiency model only>

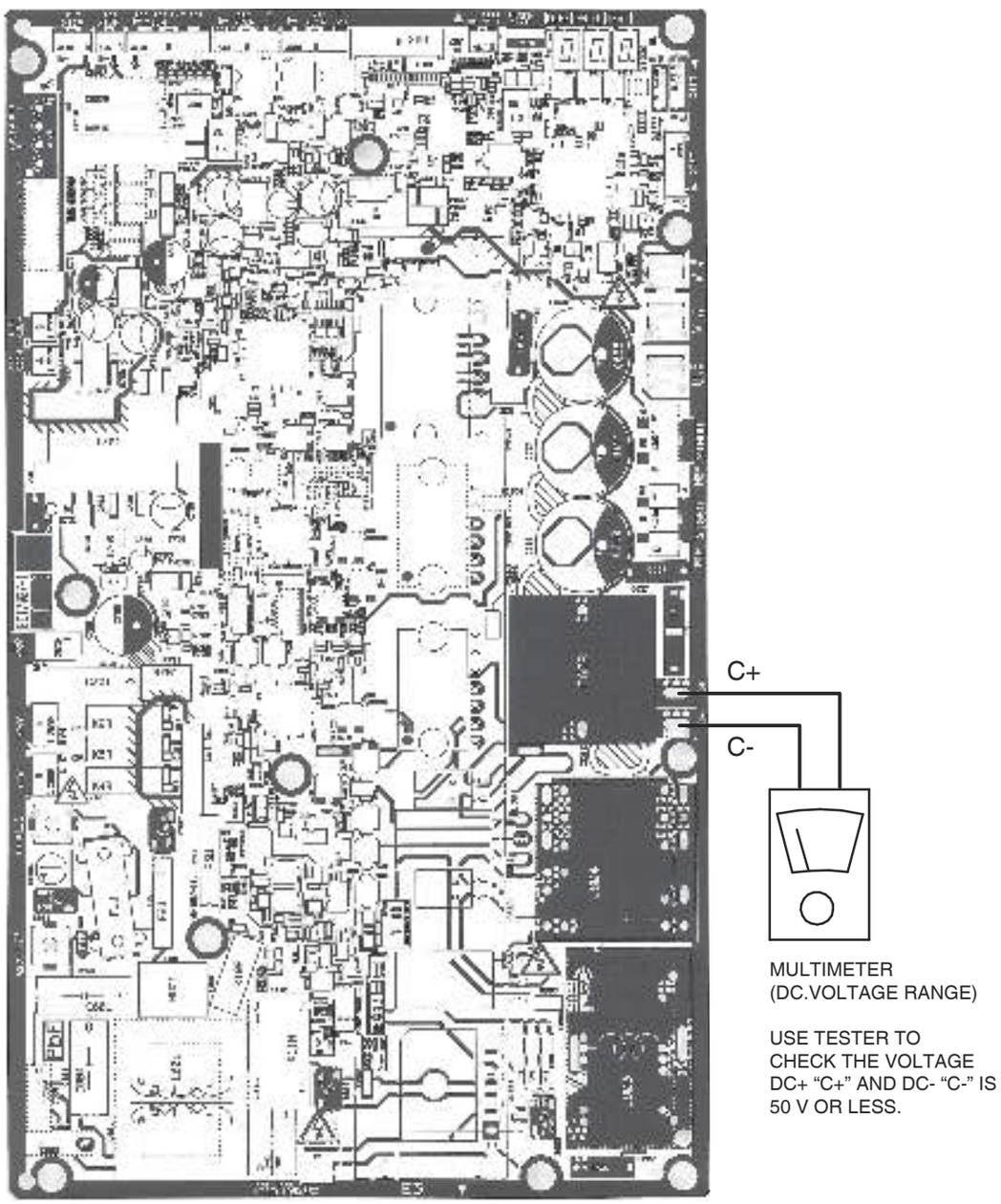

Capacitor Voltage

01_EN_DNA_FIT_Goodman.indd 42 2024/06/11 15:21:57

TROUBLESHOOTING

Thermostat display	Control board LED Display	Description	Probable Causes	Corrective Actions
12	**E12**	Indicates a general memory error.	• High electrical noise • Faulty control board	• Replace control board if necessary
13	**E13**	This error indicates the equipment is experiencing frequent high pressure faults. (CRITICAL)	• Blocked/restricted outdoor unit coil and/or lines • Stop valve not completely open • Overcharge • Outdoor fan not running • High pressure switch (HPS) inoperable • Faulty indoor and outdoor EEV coil • Faulty indoor and outdoor EEV • Faulty control board	• Check and clean outdoor unit coil and/or lines • Check the opening of stop valve, should be full open; Repair/replace if needed • Check refrigerant charge level; Adjust if needed • Check outdoor fan motor & wiring; Repair/replace if needed • Check indoor and outdoor EEV; Replace if needed • Check indoor and outdoor EEV coil; Replace if needed • Replace control board if necessary
14	**-**	This error indicates the equipment is experiencing frequent high pressure faults. Control has determined continued operation is acceptable. This indicates they may be a problem with the equipment. (MINOR)	• Blocked/restricted outdoor unit coil and/or lines • Stop valve not completely open • Overcharge • Outdoor fan not running • High pressure switch (HPS) inoperable • Faulty indoor and outdoor EEV coil • Faulty indoor and outdoor EEV • Faulty control board	• Check and clean outdoor unit coil and/or lines • Check the opening of stop valve, should be full open; Repair/replace if needed • Check refrigerant charge level; Adjust if needed • Check outdoor fan motor & wiring; Repair/replace if needed • Check indoor and outdoor EEV; Replace if needed • Check indoor and outdoor EEV coil; Replace if needed • Replace control board if necessary
15	**E15**	This error indicates the equipment is experiencing frequent low pressure faults. (CRITICAL)	• Stop valve not completely open • Restriction in refrigerant lines • Low refrigerant charge • Refrigerant leak • Pressure sensor inoperable or not properly connected • Indoor fan motor not functioning correctly • Faulty indoor and outdoor EEV coil • Faulty indoor and outdoor EEV • Faulty control board	• Check the opening of stop valve, should be full open; Repair/replace if needed • Check for restrictions in refrigerant line; Repair/replace if needed • Check refrigerant charge level; Adjust if needed • Test for system leaks using leak test procedure • Check the connection to pressure sensor; Repair/replace if needed • Check indoor and outdoor EEV; Replace if needed • Check indoor and outdoor EEV coil; Replace if needed • Check indoor blower motor & wiring; Repair/replace if needed • Replace control board if necessary
16	**-**	This error indicates the equipment is experiencing frequent low pressure faults. Control has determined continued operation is acceptable. This indicates they may be a problem with the equipment. (MINOR)	• Stop valve not completely open • Restriction in refrigerant lines • Low refrigerant charge • Refrigerant leak • Pressure sensor inoperable or not properly connected • Indoor fan motor not functioning correctly • Faulty indoor and outdoor EEV coil • Faulty indoor and outdoor EEV • Faulty control board	• Check the opening of stop valve, should be full open; Repair/replace if needed • Check for restrictions in refrigerant line; Repair/replace if needed • Check refrigerant charge level; Adjust if needed • Test for system leaks using leak test procedure • Check the connection to pressure sensor; Repair/replace if needed • Check indoor and outdoor EEV; Replace if needed • Check indoor and outdoor EEV coil; Replace if needed • Check indoor blower motor & wiring; Repair/replace if needed • Replace control board if necessary
17	**E17**	This error indicates the equipment is experiencing frequent compressor faults.	• Stop valve not completely open • The compressor wire is lost phase • Compressor motor failure	• Check the opening of stop valve, should be full open; Repair/replace if needed • Check the wire between control board and compressor • Inspect compressor motor for proper function; Replace if necessary
18	**E18**	Indicates the control board may need to be replaced.	• Outdoor fan motor not connected properly • Faulty control board • Electrical Noise	• Check wiring from Outdoor fan motor to control board; Repair if needed • Replace control board if necessary
19	**E19**	This error indicates the equipment is experiencing frequent outdoor unit control board and/or motor faults.	• Obstruction in fan rotation • Outdoor fan motor not connected properly • Outdoor fan not running • Faulty control board • Electrical Noise	• Check and clean grille of any debris • Check wiring from Outdoor fan motor to control board; Repair if needed • Check outdoor fan motor & wiring; Repair/replace if needed • Replace control board if necessary
20	**E20**	This error indicates the equipment is experiencing outdoor EEV fault.	• Outdoor EEV coil is not connected • Faulty outdoor EEV coil • Faulty control board	• Check outdoor EEV coil connection Repair/replace as needed • Replace control board if necessary
21	**E21**	This error indicates the equipment is experiencing frequent low discharge superheat faults.	• Thermistors inoperable or improperly connected • Faulty indoor and outdoor EEV coil • Faulty indoor and outdoor EEV • Over charge • Faulty pressure sensor • Faulty control board	• Check the connection to thermistors; Repair/replace if needed • Check indoor and outdoor EEV coil; Repair/replace if needed • Check indoor and outdoor EEV; Replace/repair if needed • Check refrigerant charge level; Adjust if needed • Check pressure sensor; Repair/replace if needed • Replace control board if necessary
22	**E22**	This error indicates the equipment is experiencing frequent high discharge temperature faults. Discharge thermistor is not put in correct position.	• Discharge thermistor inoperable or improperly connected • Discharge thermistor is put in incorrect position or off • The compressor enclosure temperature is too high • Low refrigerant charge • Overcharge • Faulty compressor	• Check discharge thermistor resistance and connections; Repair/replace as needed • Check discharge thermistor position • Check refrigerant charge level; Adjust if needed • Check the compressor; Repair/replace if needed
23	**E23**	The control has detected that the Discharge Temperature Sensor is out of range.	• Discharge thermistor inoperable or improperly connected	• Check discharge thermistor resistance and connections; Repair/replace as needed
24	**E24**	The high pressure switch is open.	• High pressure switch (HPS) inoperable	• Check resistance on HPS to verify operation; Replace if needed

01_EN_DNA_FIT_Goodman.indd 43 2024/05/14 20:04:31

TROUBLESHOOTING

Thermostat display	Control board LED Display	Description	Probable Causes	Corrective Actions
25	**E25**	The outdoor air temperature sensor is open or shorted.	• Faulty outdoor thermistor sensor or disconnect	• Inspect and test sensor; Replace sensor if needed
26	**E26**	The control determines that the pressure sensor is not reacting properly.	• Pressure sensor inoperable or not properly connected	• Check the connection to pressure sensor; Repair/replace if needed
27	**E27**	The control has detected that the Outdoor Coil Defrost Temperature Sensor is out of range.	• Outdoor defrost thermistor inoperable or not properly connected	• Check the connection to OD defrost thermistor; Repair/replace if needed
28	**E28**	The control has detected that the Outdoor Coil Temperature Sensor is out of range.	• Outdoor coil thermistor inoperable or not properly connected	• Check the connection to OD coil thermistor; Repair/replace if needed
29	**E29**	The control has detected that the Liquid Temperature Sensor is out of range.	• Liquid thermistor inoperable or not properly connected	• Check the connection to liquid thermistor; Repair/replace if needed
30	**E30**	Indicates the control board may need to be replaced.	• Wiring to control board disconnected • Faulty control board • Electrical Noise	• Check wiring to control board; Repair as needed • Replace control board if necessary
32	**E32**	This error indicates the equipment is experiencing high temperature faults on the outdoor unit control board.	• Ambient air conditions too high • Stop valve not completely open • Cooling bracket screw(s) missing or not properly fastened <3.5 - 5.0 ton model and 3.0 - 4.0 ton Enhanced Capacity/High Efficiency model only> • No or poor thermal grease coating between cooling plumbing and cooling bracket on control board <3.5 - 5.0 ton model and 3.0 - 4.0 ton Enhanced Capacity/High Efficiency model only> • No flow or limited flow through control board cooling circuit (potential restriction in line or low refrigerant) <3.5 - 5.0 ton model and 3.0 - 4.0 ton Enhanced Capacity/High Efficiency model only>	• Cycle power; re-try during usable ambient temperature range • Check grease applying condition <3.5 - 5.0 ton model and 3.0 - 4.0 ton Enhanced Capacity/High Efficiency model only> • Check screw tightening condition <3.5 - 5.0 ton model and 3.0 - 4.0 ton Enhanced Capacity/High Efficiency model only> • Check for restriction in line • Check refrigerant charge level; Adjust if needed • Check the opening of stop valve, should be full open; Repair/replace if needed
33	**-**	This error indicates the equipment is experiencing high temperature faults on the outdoor unit control board. Control has determined continued operation is acceptable. This indicates they may be a problem with the equipment.	• Ambient air conditions too high • Stop valve not completely open • Cooling bracket screw(s) missing or not properly fastened <3.5 - 5.0 ton model and 3.0 - 4.0 ton Enhanced Capacity/High Efficiency model only> • No or poor thermal grease coating between cooling plumbing and cooling bracket on control board <3.5 - 5.0 ton model and 3.0 - 4.0 ton Enhanced Capacity/High Efficiency model only> • No flow or limited flow through control board cooling circuit (potential restriction in line or low refrigerant) <3.5 - 5.0 ton model and 3.0 - 4.0 ton Enhanced Capacity/High Efficiency model only>	• Cycle power; re-try during usable ambient temperature range • Check grease applying condition <3.5 - 5.0 ton model and 3.0 - 4.0 ton Enhanced Capacity/High Efficiency model only> • Check screw tightening condition <3.5 - 5.0 ton model and 3.0 - 4.0 ton Enhanced Capacity/High Efficiency model only> • Check for restriction in line • Check refrigerant charge level; Adjust if needed • Check the opening of stop valve, should be full open; Repair/replace if needed
34	**E34**	Control board detected a high current condition. This indicates the potential for a short circuit.	• Current spike in supply • Stop valve not completely open • The compressor wire is lost phase • Faulty control board • Faulty compressor	• Check power supply for in-rush current during start-up or steady state operation • Check the opening of stop valve, should be full open; Repair/replace if needed • Check the wire between control board and compressor • Replace control board if necessary • Check the compressor; Repair/replace if needed
35	**E35**	Control board detected a high current condition.	• Short circuit condition • Stop valve not completely open • Overcharge • Faulty control board • Faulty compressor	• Check installation clearances. • Check the opening of stop valve, should be full open; Repair/replace if needed • Check refrigerant charge level; Adjust if needed • Replace control board if necessary • Check the compressor; Repair/replace if needed.
36	**E36**	The control encountered an abnormal condition during the startup procedure.	• Blocked/restricted outdoor unit coil and/or lines • The compressor wire is lost phase • Inconsistent compressor load • Faulty control board	• Check and clean outdoor unit coil and/or lines • Check the wire between control board and compressor • Replace control board if necessary
37	**E37**	Indicates the control board may need to be replaced.	• Outdoor fan motor not connected properly • Faulty control board	• Check wiring from Outdoor fan motor to control board; Repair if needed • Replace control board if necessary
38	**E38**	The control has detected a voltage related issue with the compressor.	• High or low voltage from supply • The compressor wire is lost phase • Faulty control board	• Correct low/high line voltage condition; Contact local utility if needed • Check the wire between control board and compressor • Replace control board if necessary
39	**E39**	Indicates the control board may need to be replaced.	• Thermistors inoperable or improperly connected • Faulty control board	• Check the connection to thermistors; Repair/replace if needed • Replace control board if necessary
40	**E40**	Control determines that its compressor requirement is different than the compressor capability.	• Memory card not correct • Control board mismatch	• Check memory card data vs. outdoor unit model • Verify control board size vs. outdoor unit model; Replace control board if necessary
41	**E41**	The control has detected a low refrigerant condition.	• Refrigerant leak • Low refrigerant charge • Thermistors inoperable or not properly connected	• Test for system leaks using leak test procedure • Check refrigerant charge level; Adjust if needed • Check the connection to thermistor; Repair/replace if needed
42	**E42**	Control detects a low power supply voltage condition.	• Low line voltage supply	• Check circuit breakers and fuses; Replace if needed • Verify unit is connected to power supply as specified on rating plate • Correct low line voltage condition; Contact local utility if needed

01_EN_DNA_FIT_Goodman.indd 44 2024/06/11 15:21:57

TROUBLESHOOTING

Thermostat Display	Control board LED Display	Description	Probable Causes	Corrective Actions
43	**E43**	Control detects a high power supply voltage condition.	• High line voltage supply	• Verify unit is connected to power supply as specified on rating plate • Correct high line voltage condition; Contact local utility if needed
44	**E44**	The control detects the outdoor temperature outside recommended operational range. Unit may continue to operate normally.	• Ambient air conditions too high or low	• Cycle power; re-try during usable ambient temperature range
47	**E47**	The control is unable to start the System Verification test because indoor heat has been turned on by thermostat. Please set thermostat to off position.	• Heat provided by secondary heating source	• Turn off Furnace or heater using thermostat before operation
49	**E49**	The control is unable to enter Charging Mode because indoor heat has been turned on by thermostat. Please set thermostat to off position.	• Heat provided by secondary heating source	• Turn off heater using thermostat before operation
50	**E50**	This indicates there is a voltage issue on the control board. See service manual for troubleshooting information.	• High or low voltage from supply voltage or frequency • Faulty control board • Noise	• Correct low/high line voltage condition; Contact local utility if needed • Replace control board if necessary • Contact local utility if needed
51*1	**E51**	This indicates potential communication issues have been detected by the outdoor unit control board.	• Communication wiring disconnected	• Check communication wiring; Repair as needed
52	**-**	This error indicates the equipment is experiencing frequent compressor faults. Control has determined continued operation is acceptable. This indicates they may be a problem with the equipment.	• Stop valve not completely open • The compressor wire is lost phase • Compressor motor failure	• Check the opening of stop valve, should be full open; Repair/replace if needed • Check the wire between control board and compressor • Inspect compressor motor for proper function; Replace if necessary
53	**-**	This error indicates the equipment is experiencing frequent outdoor unit control board and/or motor faults. Control has determined continued operation is acceptable. This indicates they may be a problem with the equipment.	• Obstruction in fan rotation • Outdoor fan motor not connected properly • Outdoor fan not running • Faulty control board • Noise	• Check and clean grille of any debris • Check wiring from Outdoor fan motor to control board; Repair if needed • Check outdoor fan motor & wiring; Repair/replace if needed • Replace control board if necessary
54	**-**	This error indicates the equipment is experiencing frequent low discharge superheat faults. Control has determined continued operation is acceptable. This indicates they may be a problem with the equipment.	• Thermistors inoperable or improperly connected • Faulty indoor EEV or indoor EEV coil (when cooling) • Faulty control board • Faulty outdoor EEV or outdoor EEV coil (when heating)	• Check the connection to thermistors; Repair/replace if needed • Check indoor EEV; Replace if needed • Check indoor EEV coil; Replace if needed • Replace control board if necessary • Check outdoor EEV: Replace if needed • Check outdoor EEV coil: Replace if needed
55	**-**	This error indicates the equipment is experiencing frequent high discharge temperature faults. Control has determined continued operation is acceptable. This indicates they may be a problem with the equipment.	• Discharge thermistor inoperable or improperly connected • Discharge thermistor is put in incorrect position or off • Low refrigerant charge • Overcharge • Faulty compressor	• Check discharge thermistor resistance and connections; Repair/replace as needed • Check discharge thermistor position • Check refrigerant charge level; Adjust if needed • Check the compressor; Repair/replace if needed
56	**E56**	The control has detected if the Outdoor Suction Temperature Sensor is out of range.	• Suction thermistor inoperable or not properly connected • Faulty reversing valve	• Check the connection to suction thermistor; Repair/replace if needed • Check reversing valve; Replace if needed
57	**-**	This indicates the control is sensing sweating on the cooling loop. <3.5 - 5.0 ton model and 3.0 - 4.0 ton Enhanced Capacity/High Efficiency model only>	• Refrigerant Leak • Low refrigerant charge • Faulty indoor EEV or indoor EEV coil • Thermistors inoperable or improperly connection	• Test for system leaks using leak test procedure • Check refrigerant charge level; Adjust if needed • Check indoor EEV; Replace if needed • Check indoor EEV coil; Replace if needed • Check the connection to thermistors; Repair/replace if needed

*(*1) Network communication error (Refer to "NETWORK TROUBLESHOOTING")*

01_EN_DNA_FIT_Goodman.indd 45 2024/06/11 15:21:57

TROUBLESHOOTING

Thermostat Display	Control board LED Display	Description	Probable Causes	Corrective Actions
58	**E58**	The Overload Protection sensor for Compressor is opened.	• Overload protection (OL) sensor inoperable • Jumper wire (X33A) is put in incorrect position or off	• Check resistance on OL sensor to verify operation; Replace if needed. • Check OL sensor position on compressor body. • Check jumper wire position (X33A)
B0	**Eb0**	The estimated airflow from indoor subsystem is near to 0 CFM.	• Failed indoor blower motor • Indoor fan motor not properly connected • Too much static pressure	• Check ID fan motor wiring and connectors; Repair/replace if needed • Check ID fan motor; Replace if needed • Check the obstruction inside duct work.
B9	**Eb9**	Estimated airflow from motor is lower than the airflow requirement.	• Failed indoor blower motor • Indoor fan motor not properly connected • Too much static pressure	• Check ID fan motor wiring and connectors; Repair/replace if needed • Check ID fan motor; Replace if needed
D0	**Ed0**	Control board does not have the necessary data for it to properly perform its functions.	• Outdoor unit is wired as part of a communicating system and integrated control module does not contain any shared data.	• Replace control board if necessary
D1	**Ed1**	Control board does not have the appropriate data needed to properly perform its functions.	• Outdoor unit is wired as part of a communicating system and integrated control module contains invalid shared data or network data is invalid for the integrated control module.	• Replace control board if necessary
D2	**Ed2**	The airflow requirement is greater than the airflow capability of the indoor subsystem.	• Outdoor unit is wired as part of a communicating system and outdoor unit requires airflow greater than indoor unit's airflow capability, or a type of indoor unit without EEV is connected to the system. • Shared data is incompatible the system or missing parameters • Communication wiring with indoor unit has loose connection. • Airflow trim setting is out of range. See "**SET THERMOSTAT TO ADJUST INDOOR AIR CFM TRIM**" section.	• Check combination to be matched with rating list; correct if needed. • Verify shared data is correct for your specific model; Repopulate data if required • Check communication wiring and power supply wiring of indoor unit. Repair as needed. • Verify trim setting and adjust if needed.
D3	**Ed3**	There is a mismatch between the shared data and the control physical hardware.	• Shared data sent to integrated control module does not match hardware configuration.	• Verify shared data is correct for your specific model; Repopulate data if required
D4	**Ed4**	The memory card data has been rejected.	• Shared data on memory card has been rejected.	• Verify shared data is correct for your specific model; Repopulate data if required

Items below are messages only displayed on the thermostat screen.				
11	**E11**	This test is required at startup. Installer should navigate to the thermostat menu to run SYSTEM START-UP TEST. This code will clear once testing is complete.	• Incomplete SYSTEM START-UP TEST • SYSTEM START-UP TEST is running	Run the SYSTEM START-UP TEST. (See the installation manual of the outdoor unit, "STEP3. SYSTEM START-UP TEST")

01_EN_DNA_FIT_Goodman.indd 46 2024/05/14 20:04:32

TROUBLESHOOTING

NETWORK TROUBLESHOOTING

If a network communication error code has occurred, use the following steps to help troubleshoot the system. (For network communication error codes, refer to the table below and the tables of error codes for outdoor unit and indoor unit.)

After any wiring changes have been made or DS1 dip switches on the outdoor unit control board and/or DS7 on the indoor unit control board have been changed, apply power to the system and see if the error codes have cleared.

1. Confirm low voltage wiring is correct per installation instructions. Check for miswiring. (i.e. Terminal 1 and 2 is reversed.)

NOTE: A removable plug connector is provided with the control to make thermostat wire connections (3.5 - 5.0 ton only). This plug may be removed, wire connections made to the plug, and replaced. It is strongly recommended that you do not connect more than two wires into a single terminal in the field because there is a risk of the wires becoming loose, which may result in intermittent operation.

2. Check wires for damage. (i.e. Broken wire at terminal, broken inside wire nuts or damaged cable between units.)
3. Perform continuity check on wires to make sure cable is OK. Replace the cable if necessary
4. Change both dip switch 1 and 2 of DS1 on the outdoor unit control board.
   In case the indoor unit control board has DS7, refer to the following table “Dip Switch Setting Combinations” (see the indoor unit installation manual to verify whether the indoor unit has a DS7 switch.) Try the combinations of dip switches for DS1 and DS7 on the outdoor and indoor unit control board, respectively, one by one. Check that any combinations clear the communication error.
   These dip switches change the termination resistance value of the communication circuit.

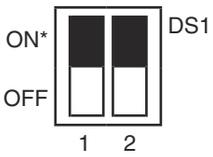

Outdoor unit DS1

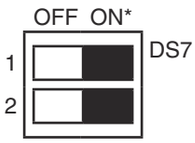

Indoor unit DS7

(*)Default factory setting.

Dip Switch Setting Combinations

Setting Combinations	DS1 on the outdoor unit control board	DS7 on the indoor unit control board
1*	(both) ON	(both)ON
2	(both) OFF	(both) ON
3	(both) ON	(both) OFF
4	(both) OFF	(both) OFF

(*) Default factory setting

The integrated control module has some onboard tools that can be used to troubleshoot the network. These tools are: red communications LED, green receive (Rx) LED, and the learn button.

- Red communications LED – Indicates the status of the network. The table below indicates the LED status and the corresponding potential problem.
- Green receive LED – Indicates network traffic. The table below indicates the LED status and the corresponding potential problem.
- LEARN button – Used to reset the network. Press the button for approximately 5 seconds to reset the network.

LED COLOR	LED Status	Indication	Probable Causes	Corrective Actions
Red Communications LED Outdoor unit control board: (H1P) Indoor unit control board :(H2P)	Off	Normal condition	• None	• None
	1 Flash	Communications failure	• Unknown packet is received • Communications failure	• Depress learn button • Verify wiring connection
	2 Flash	Out-of-box reset	• Control power up • Learn button depressed	• None
Green Receive LED Outdoor unit control board:(H2P) Indoor unit control board:(H3P)	Off	No power Communications error	• No power to unit • Open fuse • Communication error	• Check circuit breakers and fuses; Reset/Replace if needed • Reset network by depressing learn button • Check communication wires (terminal 1/terminal 2 wires); Replace if needed • Check for shorts in low voltage wiring.
	1 Steady Flash	No network found	• Broken/disconnected communication wire(s) • Unit is installed as a legacy/traditional system	• Check communication wires (terminal 1/terminal 2 wires); Replace if needed • Check installation type (legacy/traditional or communicating)
	Rapid Flashing	Normal network traffic	• Control is “talking” on network as expected	• None
	On Solid	Terminal 1/Terminal 2 miss-wire	• Terminal 1 and Terminal 2 wires reversed at indoor unit, thermostat, or outdoor unit • Short between terminal 1 and terminal 2 wires • Short between terminal 1 or terminal 2 two wires and terminal C (24VAC) or terminal R (24VAC, COM)	• Check communication wires (terminal 1/terminal 2 wires); Replace if needed

01_EN_DNA_FIT_Goodman.indd 47 2024/06/19 20:30:23

SETTING THE MODE DISPLAY

MODE DISPLAY INTRODUCTION

A 3-digit display is provided on the printed circuit board (PCB) as a backup tool to the thermostat for reading faults, fault history, monitoring and setting up the outdoor unit. Follow the information provided in this section to learn how to use the mode display.

DISPLAY

The display consists of 3 digits.

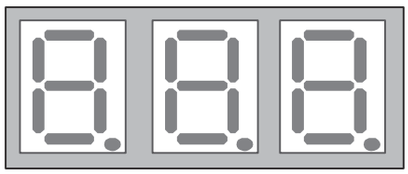

SEG1 SEG2 SEG3



OFF

ON

Blink interval: 0.4 sec. On - 0.4 sec. Off

DISPLAY BUTTON LAYOUT

The display buttons shown can be used to navigate and select items:

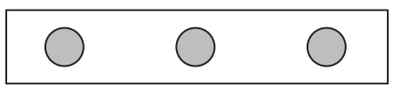

LEARN RECALL TEST

MODES

There are 5 modes which can be accessed using the setting display:
“FAULT CODE, FAULT HISTORY, MONITORING, SETTING MODE 1” and “SETTING MODE 2”.

To enter any of these modes, use the schemes shown in this section. Each mode has its own corresponding “Screen #” within the display itself which allows the user to navigate and use the features. (Example: The Fault Code is accessed and displayed from “Screen Zero” of the 7-segment display. The Fault History is accessed and displayed using “Screen One” of the display, etc.)

MODE	FUNCTION	DISPLAY SCREEN #
Fault Code Display	Present fault (if any).	0 (Default)
Fault Code History	6 Recent faults stored.	1
Monitoring Mode	*Monitors system values.	2
Setting Mode 1	*Can change system settings	3
Setting Mode 2	*Can change system settings.	4

**See tables at the end of this section.*

01_EN_DNA_FIT_Goodman.indd 48 2024/05/14 20:04:33

SETTING THE MODE DISPLAY

NAVIGATING THROUGH THE DISPLAY SCREENS

SCREEN 0 The home or default screen on the display. This shows the most recent fault.
SCREEN 1 To access, hold the “RECALL” button from screen 0 - 5 seconds.
SCREEN 2 To access, hold the “RECALL” button from screen 1 - 5 seconds.
SCREEN 3 To access, hold the “RECALL” button from screen 2 - 5 seconds.
SCREEN 4 To access, hold the “RECALL” and “TEST” buttons simultaneously - 5 seconds.

To return to SCREEN 0 of the display, press the LEARN button.

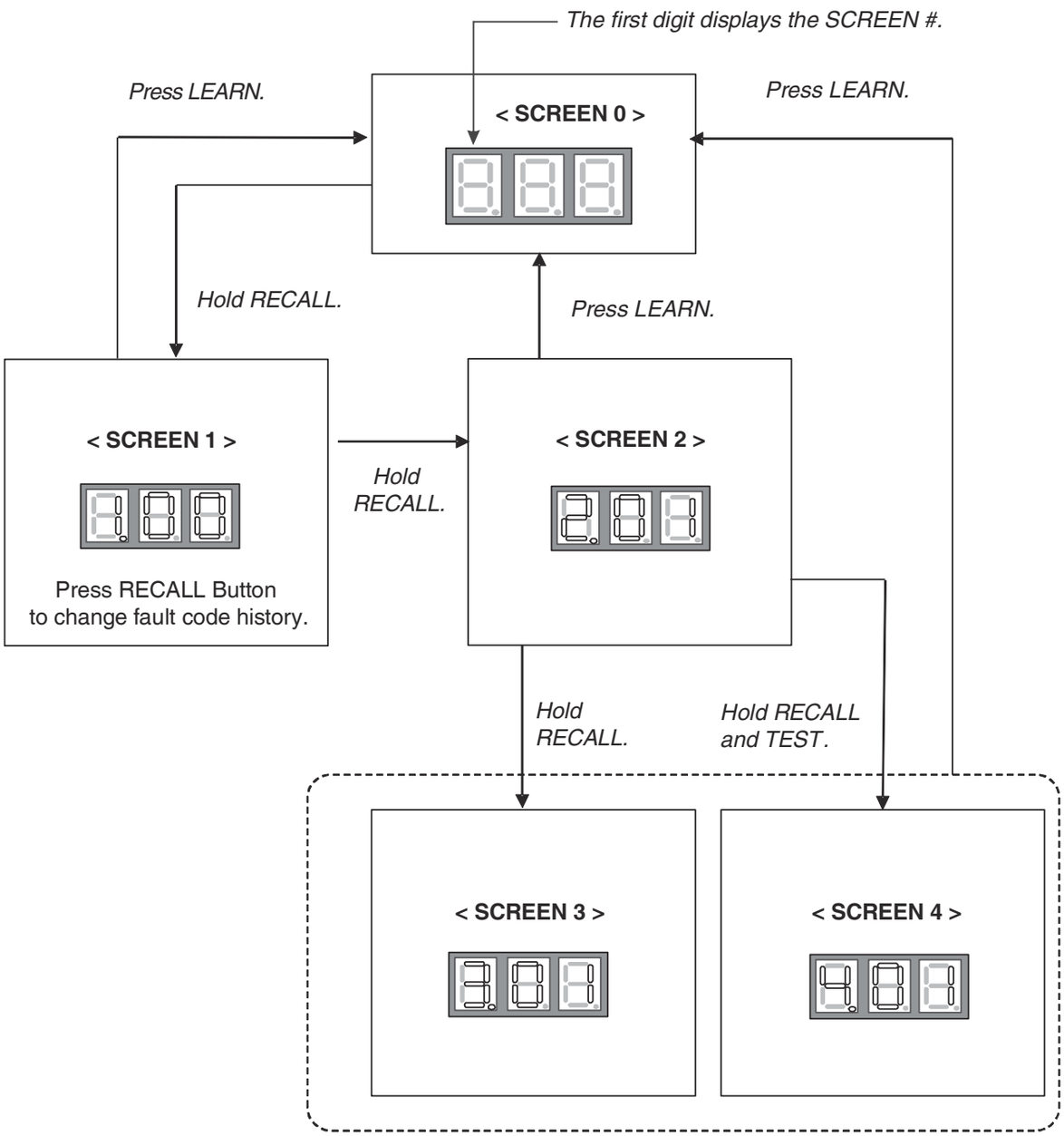

01_EN_DNA_FIT_Goodman.indd 49 2024/05/14 20:04:33

SETTING THE MODE DISPLAY

FAULT CODE HISTORY NAVIGATION

< SCREEN 1 >

This mode will allow the user to see the six most recent system faults.
For a list of the fault codes, please see the TROUBLESHOOTING tables in this document.

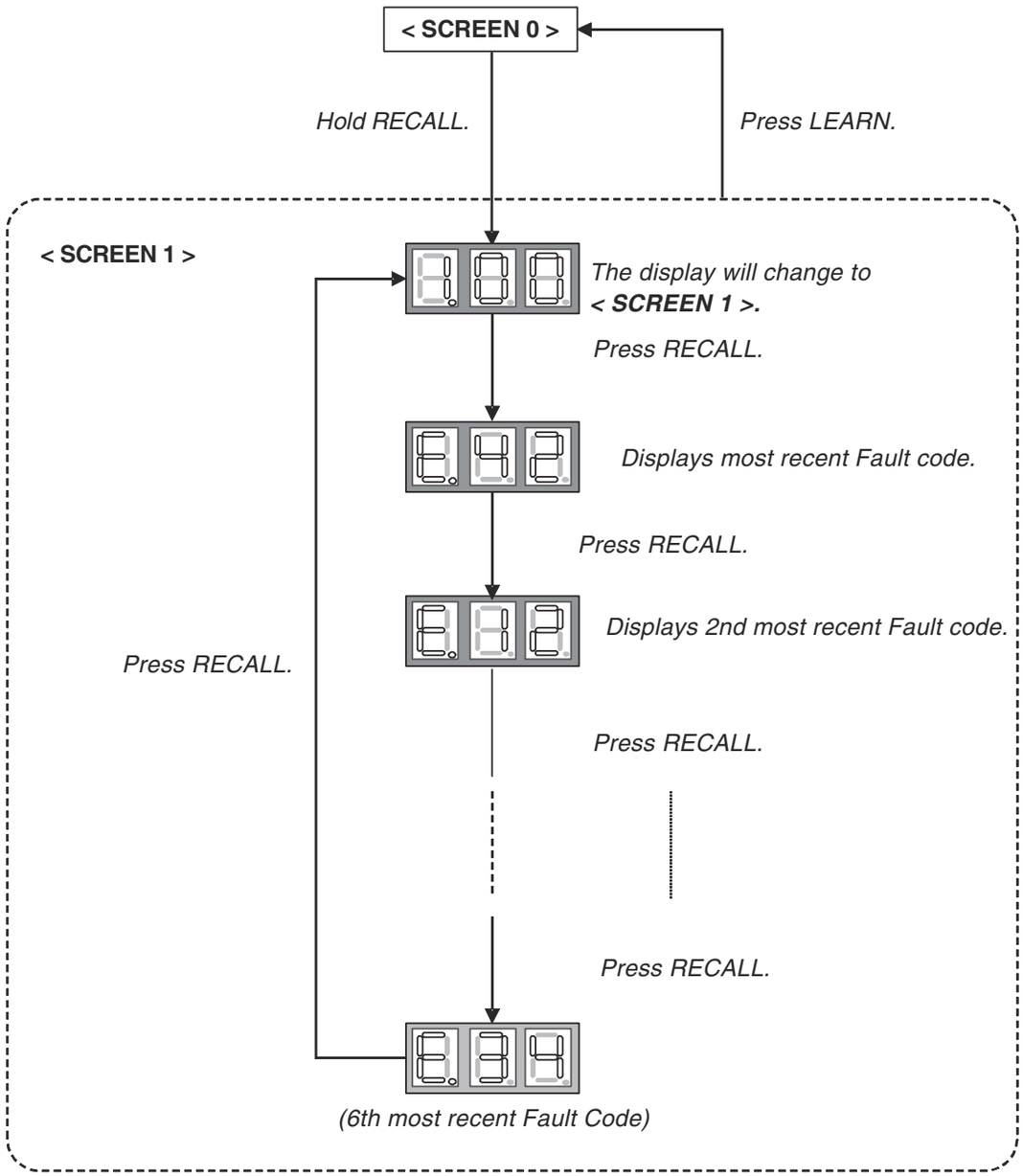

01_EN_DNA_FIT_Goodman.indd 50 2024/05/14 20:04:34

SETTING THE MODE DISPLAY

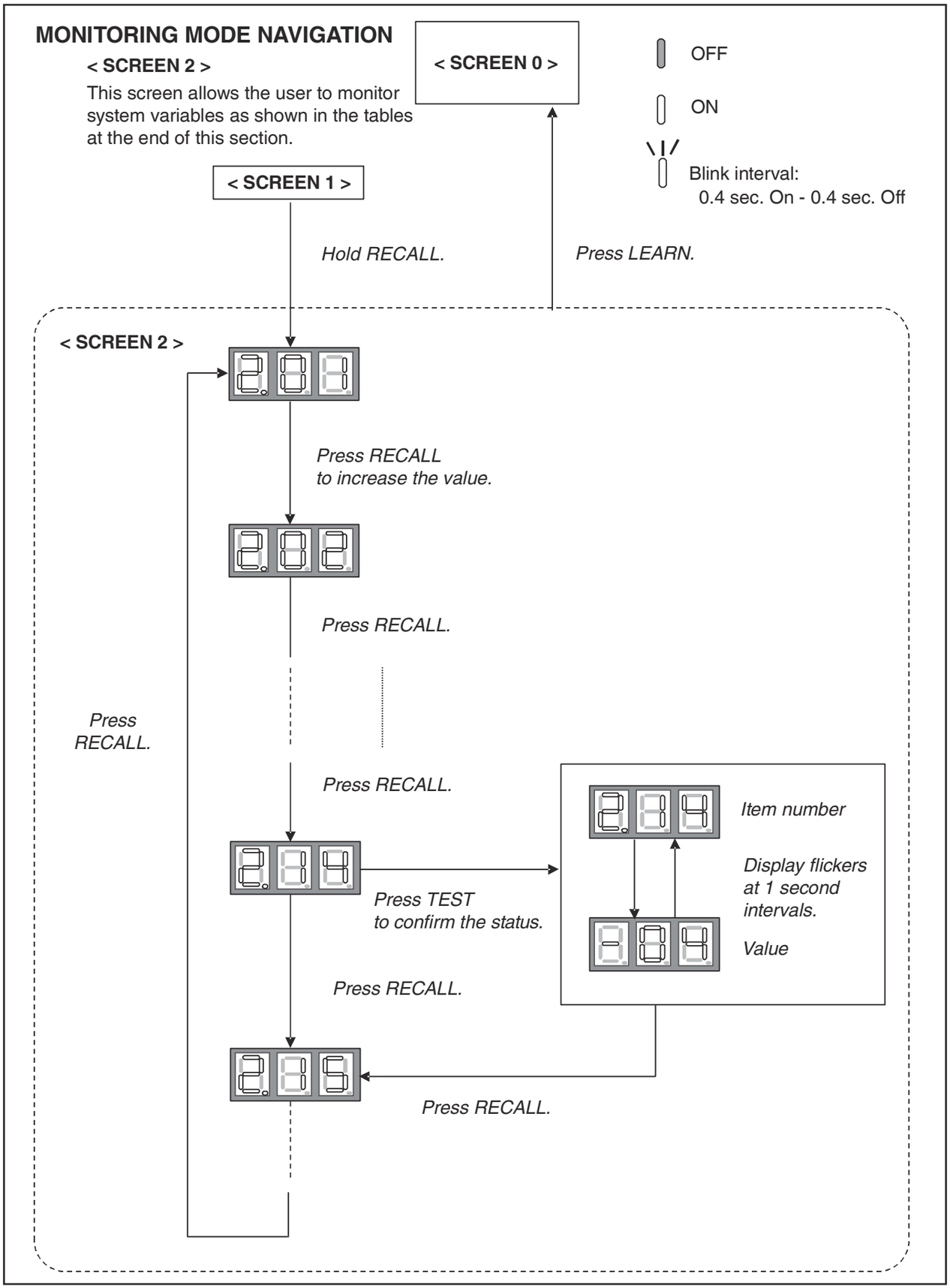

01_EN_DNA_FIT_Goodman.indd 51 2024/05/14 20:04:34

SETTING THE MODE DISPLAY

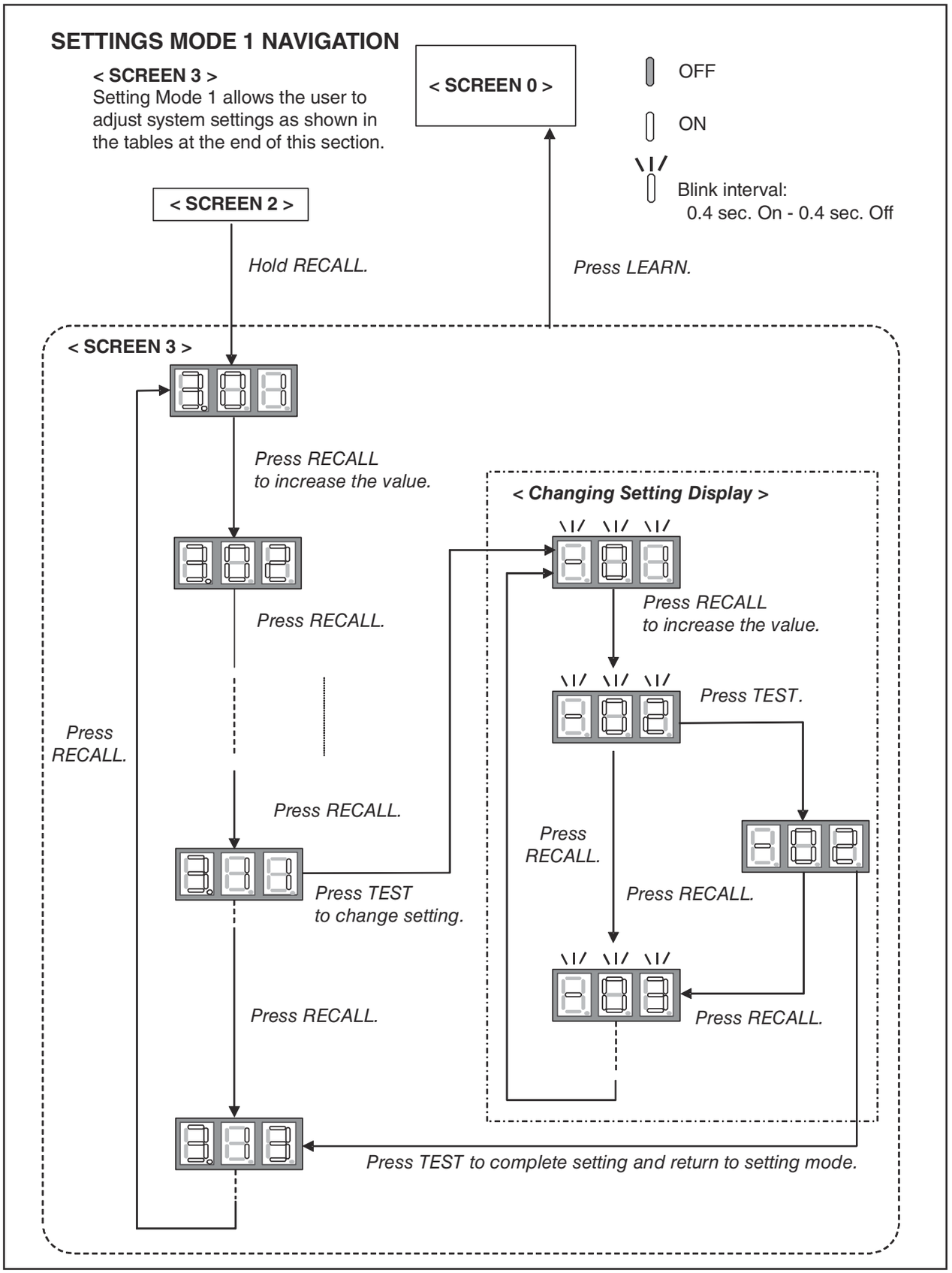

01_EN_DNA_FIT_Goodman.indd 52 2024/05/14 20:04:35

SETTING THE MODE DISPLAY

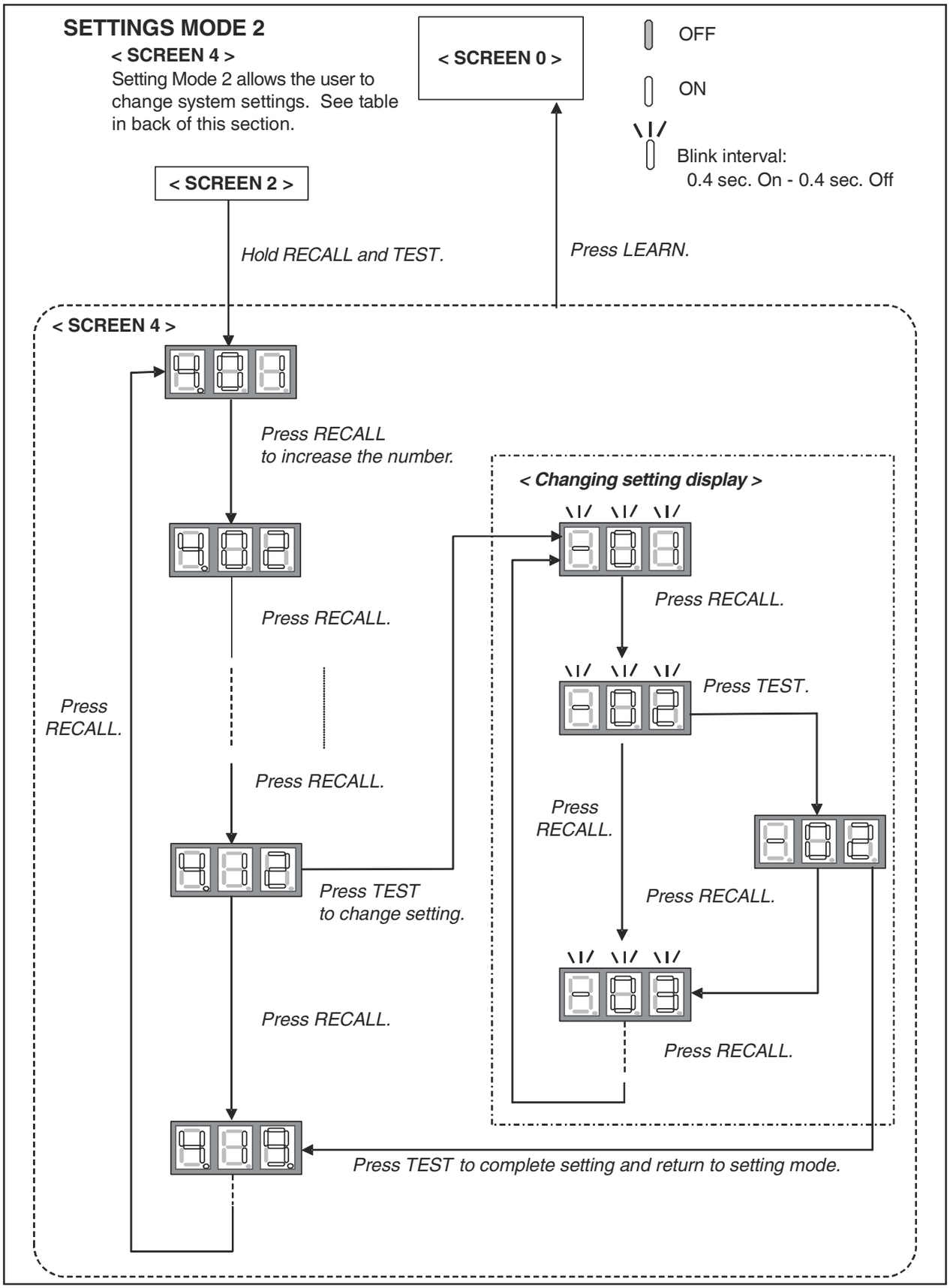

01_EN_DNA_FIT_Goodman.indd 53 2024/05/14 20:04:35

7-SEGMENT DISPLAY

SCREEN 0 (Display FAULT CODE)

Setting No.	Contents	Notes
1	Fault code (present)	

SCREEN 1 (Display FAULT CODES)

Setting No.	Contents	Notes
1	Fault code (latest)	Latest
2	Fault code (2nd)	2nd
3	Fault code (3rd)	3rd
4	Fault code (4th)	4th
5	Fault code (5th)	5th
6	Fault code (6th)	6th

SCREEN 2 (MONITOR MODE)

Setting No.	Contents	Notes
1	Compressor operation time	unit: hr (Multiply by 200)
2	Operation code	0: Stop 1: Cooling Start-up 2: Heating Start-up*1 3: Oil Return Operation 4: Heating Operation*1 5: Defrost Operation*1 6: Cooling Operation
3	Compressor Reduction Mode	0:OFF, 1: ON
4	% Demand	unit: % (Cut off the decimal first place)
5	Act % demand	unit: % (Cut off the decimal first place)
6	Requested ID CFM	unit: CFM (Multiply by 10)
7	Reported ID CFM	unit: CFM (Multiply by 10)
8	Outdoor FAN RPM	unit: RPM (Multiply by 10)
9	Ta (Outdoor Air Temperature)	unit: F
10	Td (Discharge Temperature)	unit: F
11	Tm (Outdoor Coil Temperature)	unit: F
12	Tb (Defrost Sensor Temperature)*1	unit: F
13	Tl (Liquid Temperature)	unit: F
14	Pressure sensor (Suction Pressure)	unit: PSIG
15	Ts (Suction Temperature)	unit: F

**1 HP only*

01_EN_DNA_FIT_Goodman.indd 54 2024/05/14 20:04:35

7-SEGMENT DISPLAY

SCREEN 3 (SETTING MODE 1)

Setting No.	Contents	Setting *2			Installer/Serviceman Notes
1	Cool Airflow Trim High	0:-15% 1:-10% 2:-5% **3:0%**	4:5% 5:10% 6:15%		
2	Cool Airflow Trim Int	0:-15% 1:-10% 2:-5% **3:0%**	4:5% 5:10% 6:15% 7:20%	8:30% 9:Full	
3	Cool Airflow Trim Low	0:-15% 1:-10% 2:-5% **3:0%**	4:5% 5:10% 6:15% 7:20%	8:30% 9:Full	
4	Cool Profiles	0:A 1:B	2:C	**3:D**	
5	Cool Airflow ON Delay	**0:5sec.** 1:10sec.	2:20sec.	3:30sec.	
6	Cool Airflow OFF Delay	**0:30sec.** 1:60sec.	2:90sec.	3:120sec.	
7	Dehumidification	**0:STD** 1:OFF 2:A 3:B 4:C			
8	Heat Airflow Trim High*1	0:-15% 1:-10% 2:-5% **3:0%**	4:5% 5:10% 6:15%		
9	Heat Airflow Trim Int*1	0:-15% 1:-10% 2:-5% **3:0%**	4:5% 5:10% 6:15%		
10	Heat Airflow Trim Low*1	0:-15% 1:-10% 2:-5% **3:0%**	4:5% 5:10% 6:15%		
11	Heat Airflow ON Delay*1	**0:5sec.**	1:10sec.	2:15sec.	
12	Heat Airflow OFF Delay*1	**0:30sec.** 1:50sec.	2:70sec.	3:90sec.	
13	Airflow Trim Offset*3	**0:0%**	1:+2.5%		
14	Zoning Mode	0:ON	**1:OFF**		
15	Circulation Selection	**0:ON**	1:OFF		

NOTE: Parameters as per factory setting are highlighted in bold and underlined.

**1 HP only*

**2 The setting items can be different from this table depending on the outdoor unit model revision. To confirm the setting specifications implemented, please see the attached installation manual, or the setting items displayed on the thermostat.*

**3 Used for additional trim setting by adding 2.5% to basic airflow trim setting. This setting affects all trim settings except +15% High (cooling or heating).*

01_EN_DNA_FIT_Goodman.indd 55 2024/05/14 20:04:36

7-SEGMENT DISPLAY

SCREEN 4 (SETTING MODE 2)

Setting No.	Contents	Setting	Installer/Serviceman Notes
1	Maximum Defrost Interval*1	0: 30min. 1: 60min. 2: 90min. **3: 120min.**	
2	Set Maximum Current	N/A	Future Use
3	N/A	N/A	
4	System Verification Test (System test)	0:ON **1:OFF**	
7	Force Defrost Cycle*1	0:ON **1:OFF**	
9	Charge Verification Test	0:ON **1:OFF**	
10	Maximum Compressor RPS for Cooling	0: -10.0 RPS 1: -9.5 RPS 2: -9.0 RPS 3: -8.5 RPS 4: -8.0 RPS 5: -7.5 RPS 6: -7.0 RPS 7: -6.5 RPS 8: -6.0 RPS 9: -5.5 RPS 10: -5.0 RPS 11: -4.5 RPS 12: -4.0 RPS 13: -3.5 RPS 14: -3.0 RPS 15: -2.5 RPS 16: -2.0 RPS 17: -1.5 RPS 18: -1.0 RPS 19: -0.5 RPS **20: 0.0 RPS** 21: 0.5 RPS 22: 1.0 RPS 23: 1.5 RPS 24: 2.0 RPS 25: 2.5 RPS 26: 3.0 RPS 27: 3.5 RPS 28: 4.0 RPS 29: 4.5 RPS 30: 5.0 RPS 31: 5.5 RPS 32: 6.0 RPS 33: 6.5 RPS 34: 7.0 RPS 35: 7.5 RPS 36: 8.0 RPS 37: 8.5 RPS 38: 9.0 RPS 39: 9.5 RPS 40: 10.0 RPS	Can adjust comp RPS in each 0.5 RPS.
11	Maximum Compressor RPS for Heating*1		Can adjust comp RPS in each 0.5 RPS.
12	COOLING BOOST MODE Selection	**0:ON** 1:OFF	
13	COOLING BOOST MODE Temperature	0:105F, **1:100F**, 2:95F, 3:90F, 4:85F, 5:80F, 6:75F, 7:70F, 8:Always ON	
15	N/A	N/A	
16	Quiet mode level	0:LEVEL1 **1:LEVEL2** 2:LEVEL3	
17	N/A	N/A	
18	N/A	N/A	
19	Capacity priority	0:OFF **1:ON**	
22	DEFROST HEAT*1, *2	0:Always ON, 1:30F, 2:35F, 3:40F, 4:45F, 5:50F, 6:55F, 7:60F, 8:65F, **9:OFF**	
28	HEATING BOOST MODE*1	**0:OFF** 1:ON	

**1 HP only*

**2 When installing an air handler without a heater kit, ensure that this setting is set to "OFF" (factory setting).*

NOTE: Parameters as per factory setting are highlighted in bold and underlined.

01_EN_DNA_FIT_Goodman.indd 56 2024/06/19 20:30:23

SPLIT SYSTEMS

We strongly recommend a bi-annual maintenance checkup be performed before the heating and cooling seasons begin by a qualified servicer.

REPLACE OR CLEAN FILTER

IMPORTANT NOTE: Never operate unit without a filter installed as dust and lint will build up on internal parts resulting in loss of efficiency, equipment damage and possible fire.

An indoor air filter must be used with your comfort system. A properly maintained filter will keep the indoor coil of your comfort system clean. A dirty coil could cause poor operation and/or severe equipment damage.

Your air filter or filters could be located in your air handler, in your furnace, in a blower unit, or in "filter grilles" in your ceiling or walls. The installer of your outdoor unit can tell you where your filter(s) are, and how to clean or replace them.

Check your filter(s) at least once a month. When they are dirty, replace or clean as required. Disposable type filters should be replaced. Reusable type filters may be cleaned.

You may want to ask your dealer about high efficiency filters. High efficiency filters are available in both electronic and non-electronic types. These filters can do a better job of catching small airborne particles.

COMPRESSOR

The compressor motor is hermetically sealed and does not require additional oiling.

MOTORS

Indoor and outdoor fan motors are permanently lubricated and do not require additional oiling.

CLEAN OUTSIDE COIL (QUALIFIED SERVICER ONLY)

⚠ WARNING

HIGH VOLTAGE!

DISCONNECT ALL POWER BEFORE SERVICING. MULTIPLE POWER SOURCES MAY BE PRESENT. FAILURE TO DO SO MAY CAUSE PROPERTY DAMAGE, PERSONAL INJURY OR DEATH.



Air must be able to flow through the outdoor unit of your comfort system. Do not construct a fence near the unit or build a deck or patio over the unit without first discussing your plans with your dealer or other qualified servicer. Restricted airflow could lead to poor operation and/or severe equipment damage.

Likewise, it is important to keep the outdoor coil clean. Dirt, leaves, or debris could also restrict the airflow. If cleaning of the outdoor coil becomes necessary, hire a qualified servicer. Inexperienced people could easily puncture the tubing in the coil. Even a small hole in the tubing could eventually cause a large loss of refrigerant. Loss of refrigerant can cause poor operation and/or severe equipment damage.

Do not use a outdoor unit cover to "protect" the outdoor unit. Outdoor unit fan may sometime start running regardless of demand from thermostat for system reliability reason.

BEFORE CALLING YOUR SERVICER

- Check the thermostat to confirm that it is properly set.
- Wait 15 minutes. Some devices in the outdoor unit or in programmable thermostats will prevent compressor operation for awhile, and then reset automatically. Also, some power companies will install devices which shut off outdoor units for several minutes on hot days. If you wait several minutes, the unit may begin operation on its own.

⚠ CAUTION

TO AVOID THE RISK OF EQUIPMENT DAMAGE OR FIRE, INSTALL THE SAME AMPERAGE BREAKER OR FUSE AS YOU ARE REPLACING. IF THE CIRCUIT BREAKER OR FUSE SHOULD OPEN AGAIN WITHIN THIRTY DAYS, CONTACT A QUALIFIED SERVICER TO CORRECT THE PROBLEM.

IF YOU REPEATEDLY RESET THE BREAKER OR REPLACE THE FUSE WITHOUT HAVING THE PROBLEM CORRECTED, YOU RUN THE RISK OF SEVERE EQUIPMENT DAMAGE.

- Check the electrical panel for tripped circuit breakers or failed fuses. Reset the circuit breakers or replace fuses as necessary.
- Check the disconnect switch near the indoor furnace or blower to confirm that it is closed.
- Check for obstructions on the outdoor unit. Confirm that it has not been covered on the sides or the top. Remove any obstruction that can be safely removed. If the unit is covered with dirt or debris, call a qualified servicer to clean it.
- Check for blockage of the indoor air inlets and outlets. Confirm that they are open and have not been blocked by objects (rugs, curtains or furniture).
- Check the filter. If it is dirty, clean or replace it.
- Listen for any unusual noise(s), other than normal operating noise, that might be coming from the outdoor unit. If you hear unusual noise(s) coming from the unit, call a qualified servicer.

01_EN_DNA_FIT_Goodman.indd 57 2024/05/14 20:04:36

Start-up Checklist For Unitary Inverter

**Store in job file*

Date: _____

Model Number: _____

Serial Number: _____

Technician: _____

Pre Start-Up

(Check each item as completed)

- ☐ Verify all packaging material has been removed.
- ☐ Remove all shipping brackets per installation instructions.
- ☐ Verify the job site voltage agrees with the unit serial plate.
- ☐ Verify condensate connection is installed per installation instructions.
- ☐ Verify proper clearance around the unit for safety, service, maintenance and proper unit operation.
- ☐ Verify proper weatherproofing of all ductwork, roof curbs and electrical connections.
- ☐ Check line set for leaks.
- ☐ Verify gas pressure to the unit is within the range specified on the serial plate.
- ☐ Check to ensure that all fan blades and wheels are secure.
- ☐ Check refrigerant piping for rubbing and leaks. *Repair if necessary.*
- ☐ Check unit wiring to ensure it is not in contact with refrigerant piping or sharp metal edges.
- ☐ Check all electrical connections and terminals. *Tighten as needed.*
- ☐ Verify that the outdoor unit has been energized for 2 hours.
- ☐ Verify all accessories are installed and operating correctly.
- ☐ Check filters and replace if necessary.
- ☐ Verify the installation of the thermostat. The Goodman approved communicating thermostat is the only approved thermostat for the unitary inverter unit.

3/2015

For more detailed system start-up checklist, please scan the QR code.

01_EN_DNA_FIT_Goodman.indd 58 2024/06/11 15:21:58

Start-up Checklist For Unitary Inverter

Start-Up

(Insert the values as each item is completed.)

ELECTRICAL

Supply Voltage	L1 - L2	_____

BLOWER EXTERNAL STATIC PRESSURE

Return Air Static Pressure	_____	IN. W.C.
Supply Air Static Pressure	_____	IN. W.C.
Total External Static Pressure	_____	IN. W.C.
Air Flow	_____	CFM

TEMPERATURES

Outdoor Air Temperature	_____	DB	_____	WB
Return Air Temperature	_____	DB	_____	WB
Cooling Supply Air Temperature	_____	DB	_____	WB

PRESSURES

Suction line	_____	PSIG	_____	°F
Superheat / Subcooling	_____		_____	°F
Liquid line	_____	PSIG	_____	°F

01_EN_DNA_FIT_Goodman.indd 59 2024/05/14 20:04:37

CUSTOMER FEEDBACK

We are very interested in all product comments.

Please fill out the feedback form on the following link:

https://www.goodmanmfg.com/about/contact-us

You can also scan the QR code on the right to be directed to the feedback page.

PRODUCT REGISTRATION

Thank you for your recent purchase. Though not required to get the protection of the standard warranty, registering your product is a relatively short process, and entitles you to additional warranty protection, except that failure by California, Florida, and Quebec residents to register their product does not diminish their warranty rights. The duration of warranty coverages in Texas and Florida differs in some cases.

For Product Registration, please register as follows:

https://www.goodmanmfg.com/product-registration

You can also scan the QR code on the right to be directed to the Product Registration page.

NOTE: SPECIFICATIONS AND PERFORMANCE DATA LISTED HEREIN ARE SUBJECT TO CHANGE WITHOUT NOTICE

Visit our website at www.goodmanmfg.com for information on:

- Products
- Parts
- Warranties
- Contractor Programs and Training
- Customer Services
- Financing Options

19001 Kermier Rd. Waller, Tx 77484
www.goodmanmfg.com
© 2022, 2024 Daikin Comfort Technologies Manufacturing, L.P.

3P761829-3B EM23A026A <2408> SP

99_EN_CV04_DNA_FIT_Goodman.indd 1 2024/07/04 9:57:12