51300122601 RevC

HAYWARD®

Heat Pump

For In-Ground Pool & Spa Installations

Installation and Operation Manual

Contents

Safety Instructions.....1
Before You Begin.....4
Installation.....8
Electrical Wiring.....13
Operation.....14
Maintenance & Service.....20
Troubleshooting.....23
Replacement Parts.....26

R-410A

HP21105T	HP31105T	HCB1105T	W3HP21105T
HP21205T	HP31205T	HCB1205T	
HP21405T	HP31405T	HCB1405T	W3HP21405T

Hayward Industries
1415 Vantage Park Dr., Suite 400
Charlotte, NC 28203
Phone: (908) 355-7995
www.hayward.com

IMPORTANT SAFETY INSTRUCTIONS

This appliance is not intended for use by persons (including children) with reduced physical, sensory or mental capabilities, or lack of experience or knowledge, unless they have been given supervision or instruction concerning use of the appliance by a person responsible for their safety.

Children should be supervised to ensure that they do not play with the appliance.

Not for use at altitudes above 2400 m.

Maximum/ Minimum Water Temperature - 40°C(104°F) / 5°C(40°F)

Maximum/ Minimum Water Pressure - 0.4 MPA (50 psig) / 0.03 MPA (5 psig)

Means for disconnection must be incorporated in the fixed wiring in accordance with all applicable National and Local codes.

READ AND FOLLOW ALL INSTRUCTIONS

Basic safety precautions should always be followed, including the following: Failure to follow instructions can cause death and/or severe injury.

This is the safety-alert symbol. When you see this symbol on your equipment or in this manual, look for one of the following signal words and be alert to the potential for personal injury.

WARNING - Warns about hazards that could cause death and/or severe injury or major property damage and if ignored presents a potential hazard.

CAUTION - Warns about hazards that could cause minor or moderate personal injury and/or property damage and if ignored presents a potential hazard. It can also make consumers aware of actions that are unpredictable and unsafe.

NOTICE - Indicates special instructions that are important but not related to hazards.

All Heat Pumps must be installed in accordance with all applicable National and Local codes. In the absence of local codes, refer to the latest edition of NSI / NFPA 70 - National Electric Code (NEC) in the United States and of CSA C22.1 - Canadian Electric Code (CEC) in Canada.

This product must be installed and serviced by authorized personnel, qualified in pool/spa heater installation. **Improper installation and/or operation can cause death, serious injury and/or property damage.**

See product rating plate for manufacturer information.

Conformance With Codes: The heater shall be installed in accordance with all local and state codes and with the requirements of the authority having jurisdiction of the installing site. The heater installation must conform to the latest edition of the installation codes.

SAVE THESE INSTRUCTIONS

USE ONLY HAYWARD GENUINE REPLACEMENT PARTS

WARNING - Read, Understand, and Follow all Instructions in this manual and on the equipment. Failure to follow instructions can cause death, severe injury and/or serious property damage.

WARNING - **Suction Entrapment Hazard.** Suction in suction outlets and/or suction outlet covers which are, damaged, broken, cracked, missing, or unsecured can cause death and/or severe injury due to the following entrapment hazards:

Hair Entrapment - Hair can become entangled in suction outlet cover.
Limb Entrapment - A limb inserted into an opening of a suction outlet sump or suction outlet cover that is damaged, broken, cracked, missing, or not securely attached can result in a mechanical bind or swelling of the limb.
Body Suction Entrapment - A negative pressure applied to a large portion of the body or limbs can result in an entrapment.
Evisceration/ Disembowelment - A negative pressure applied directly to the intestines through an unprotected suction outlet sump or suction outlet cover which is, damaged, broken, cracked, missing, or unsecured can result in evisceration/ disembowelment.
Mechanical Entrapment - There is potential for jewelry, swimsuit, hair decorations, finger, toe or knuckle to be caught in an opening of a suction outlet cover resulting in mechanical entrapment.

WARNING - To Reduce the risk of Entrapment Hazards:

- When outlets are small enough to be blocked by a person, a minimum of two functioning suction outlets per pump must be installed. Suction outlets in the same plane (i.e. floor or wall), must be installed a minimum of three feet (3') [1 meter] apart, as measured from near point to near point.
- Dual suction fittings shall be placed in such locations and distances to avoid "dual blockage" by a user.
- Dual suction fittings shall not be located on seating areas or on the backrest for such seating areas.
- The maximum system flow rate shall not exceed the flow rating of as listed on Table 2.
- Never use Pool or Spa if any suction outlet component is damaged, broken, cracked, missing, or not attached.
- Replace damaged, broken, cracked, missing, or not securely attached suction outlet components immediately.
- In addition two or more suction outlets per pump installed in accordance with latest ASME, APSP Standards and CPSC guidelines, follow all National, State, and Local codes applicable.
- Installation of a vacuum release or vent system, which relieves entrapping suction, is recommended.

WARNING - Failure to remove pressure test plugs and/or plugs used in winterization of the pool/spa from the suction outlets can result in an increase potential for suction entrapment as described above.

WARNING - Failure to keep suction outlet components clear of debris, such as leaves, dirt, hair, paper and other material can result in an increase potential for suction entrapment as described above.

WARNING - Suction outlet components have a finite life, the cover/grate should be inspected frequently and replaced at least every seven years or if found to be damaged, broken, cracked, missing, or not securely attached.

CAUTION - Components such as the filtration system, pumps and heater must be positioned so as to prevent their being used as means of access to the pool by young children. To reduce risk of injury, do not permit children to use or climb on this product. Closely supervise children at all times. Components such as the filtration system, pumps, and heaters must be positioned to prevent children from using them as a means of access to the pool.

WARNING - **Hazardous Pressure.** Pool and spa water heating and circulation systems operate under hazardous pressure during start up, normal operation, and after pump shut off. Stand clear of circulation system equipment during pump start up. Failure to follow safety and operation instructions could result in violent separation of the pump housing and cover, and/or filter housing and clamp due to pressure in the system, which could cause death, severe personal injury and/or property damage, Before servicing pool and spa water circulation system, all system and pump controls must be in off position and filter manual air relief valve must be in open position. Before starting system pump, all system valves must be set in a position to allow system water to return back to the pool. Do not change filter control valve position while system pump is running. Before starting system pump, fully open filter manual air relief valve. Do not close filter manual air relief valve until a steady stream of water (not air or air and water) is discharged.

WARNING - **Separation Hazard.** Failure to follow safety and operation instructions could result in violent separation of pump and/or filter components. Strainer cover must be properly secured to pump housing with strainer cover lock ring. Before servicing pool and spa circulation system, filters manual air relief valve must be in open position. Do not operate pool and spa circulation system if a system component is not assembled properly, damaged, or missing. Do not operate pool and spa circulation system unless filter manual air relief valve body is in locked position in filter upper body. Never operate or test the circulation system at more than 50 PSI. Do not purge the system with compressed air. Purging the system with compressed air can cause components to explode, with risk of severe injury or death to anyone nearby. Use only a low pressure (below 5 PSI), high volume blower when air purging the pump, filter, or piping.

WARNING - **Risk of Electric Shock.** All electrical wiring MUST be in conformance with applicable local codes, regulations, and the National Electric Code (NEC). Hazardous voltage can shock, burn, and cause death or serious property damage. To reduce the risk of electric shock, do NOT use an extension cord to connect unit to electric supply. Provide a properly located electrical receptacle. Before working on any electrical equipment, turn off power supply to the equipment. To reduce the risk of electric shock replace damaged wiring immediately. Locate conduit to prevent abuse from lawn mowers, hedge trimmers and other equipment. Do NOT ground to a gas supply line.

WARNING - **Risk of Electric Shock.** Failure to ground all electrical equipment can cause serious or fatal electrical shock hazard. Electrical ground all electrical equipment before connecting to electrical power supply.

WARNING - **Risk of Electric Shock.** Failure to bond all electrical equipment to pool structure will increase risk for electrocution and could result in injury or death. To reduce the risk of electric shock, see installation instructions and consult a professional electrician on how to bond all electrical equipment. Also, contact a licensed electrician for information on local electrical codes for bonding requirements. Means for contact separation on all poles must be incorporated in the fixed wiring in accordance with NEC.

Notes to electrician: Use a solid copper conductor, size 8 or larger. Run a continuous wire from external bonding lug to reinforcing rod or mesh. Connect a No. 8 AWG (8.4 mm^2) [No. 6 AWG (13.3 mm^2) for Canada] solid copper bonding wire to the pressure wire connector provided on the electrical equipment and to all metal parts of swimming pool, spa, or hot tub, and metal piping (except gas piping), and conduit within 5 ft. (1.5 m) of inside walls of swimming pool, spa, or hot tub. IMPORTANT - Reference NEC codes for all wiring standards including, but not limited to, grounding, bonding and other general wiring procedures.

CAUTION - These heaters are intended for use with permanently-installed pools and may be used with hot tubs and spas if so marked. Do not use with storable pools. A permanently-installed pool is constructed in or on the ground or in a building such that it cannot be readily disassembled for storage. A storable pool is constructed so that it is capable of being readily disassembled for storage and reassembled to its original integrity.

WARNING - **Risk of Hyperthermia.** To avoid hyperthermia the following "Safety Rules for Hot Tubs" are recommended by the U.S. Consumer Product Safety Commission.

1. Spa or hot tub water temperatures should never exceed 104°F [40°C]. A temperature of 100°F [38°C] is considered safe for a healthy adult. Special caution is suggested for young children. Prolonged immersion in hot water can induce hyperthermia.
2. Drinking of alcoholic beverages before or during spa or hot tub use can cause drowsiness, which could lead to unconsciousness and subsequently result in drowning.
3. Pregnant women beware! Soaking in water above 100°F [38°C] can cause fetal damage during the first three months of pregnancy (resulting in the birth of a brain-damaged or deformed child). Pregnant women should adhere to the 100°F [38°C] maximum rule.
4. Before entering the spa or hot tub, users should check the water temperature with an accurate thermometer; spa or hot tub thermostats may err in regulating water temperatures by as much as 4°F (2.2°C).
5. Persons taking medications, which induce drowsiness, such as tranquilizers, antihistamines or anticoagulants, should not use spas or hot tubs.
6. If the pool/spa is used for therapy, it should be done with the advice of a physician. Always stir pool/ spa water before entering the pool/ spa to mix in any hot surface layer of water that might exceed healthful temperature limits and cause injury. Do not tamper with controls, because scalding can result if safety controls are not in proper working order.
7. Persons with a medical history of heart disease, circulatory problems, diabetes or blood pressure problems should obtain a physician's advice before using spas or hot tubs.
8. Hyperthermia occurs when the internal temperature of the body reaches a level several degrees above normal body temperature of 98.6°F [37°C]. The symptoms of Hyperthermia include: drowsiness, lethargy, dizziness, fainting, and an increase in the internal temperature of the body.

   The effects of Hyperthermia include:
   - Unawareness of impending danger.
   - Failure to perceive heat.
   - Failure to recognize the need to leave the spa.
   - Physical inability to exit the spa.
   - Fetal damage in pregnant women.
   - Unconsciousness resulting in danger of drowning.

USE ONLY HAYWARD GENUINE REPLACEMENT PARTS

Before You Begin

What to Expect When Operating Your Pool Heater

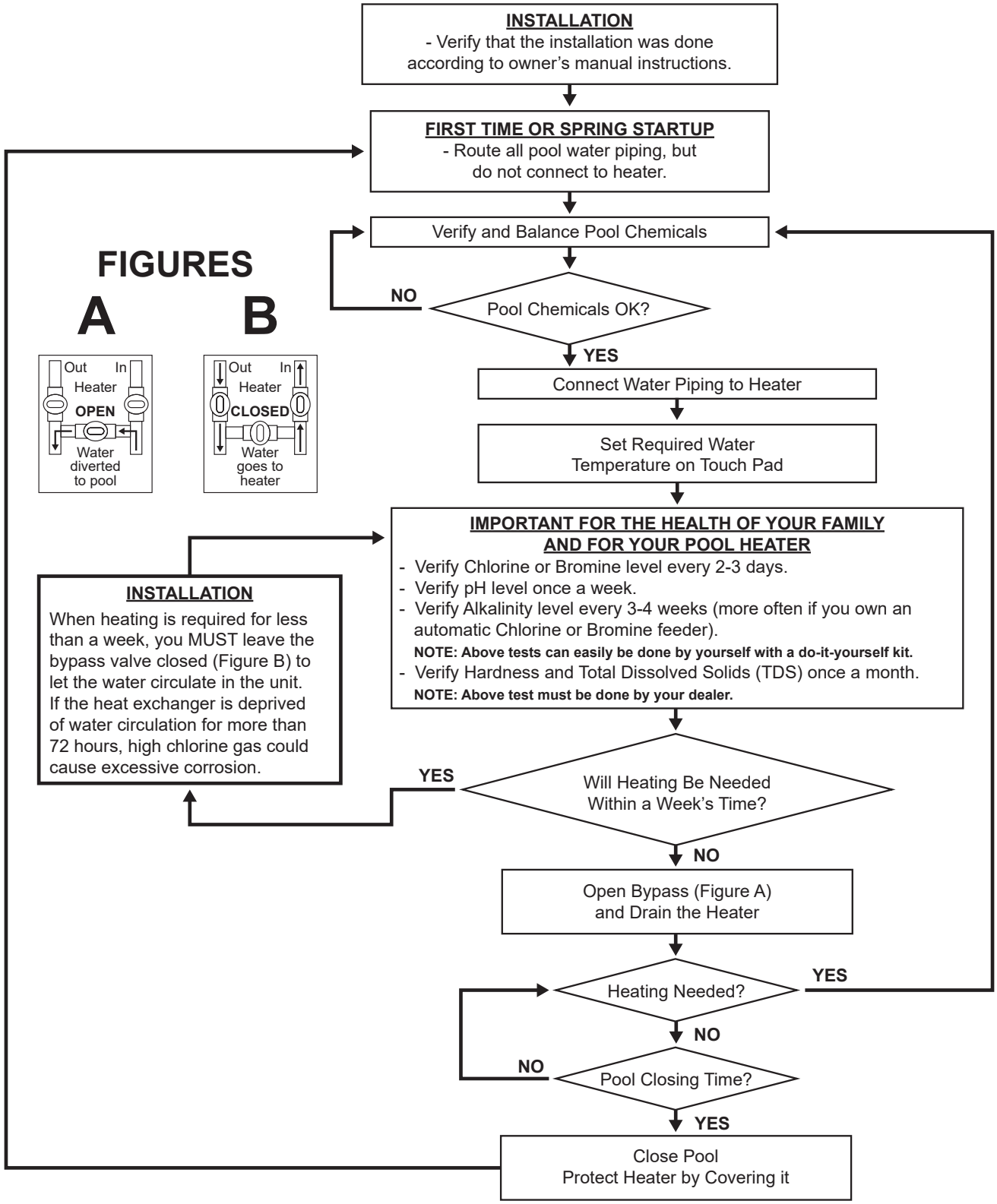

FIGURE 1: Name of Heat Pump Components

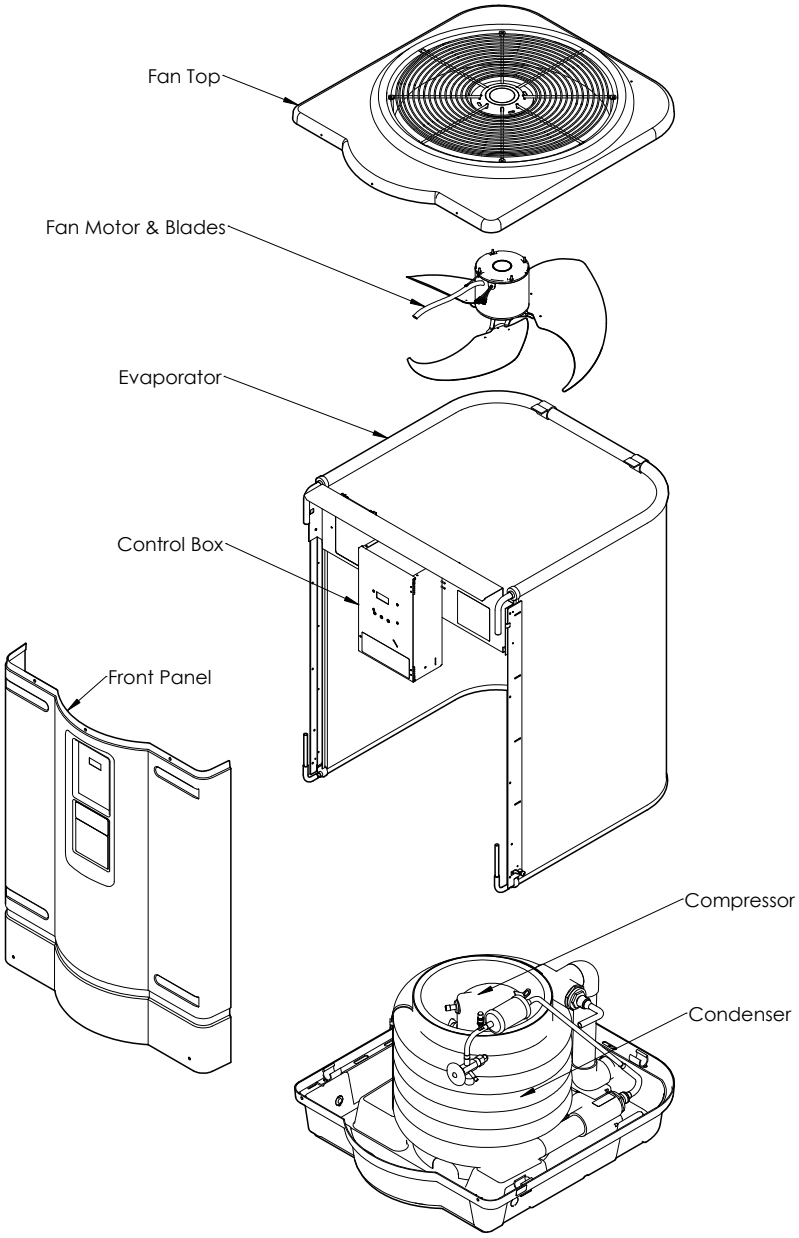

FIGURE 2: Heat Pump Dimensions

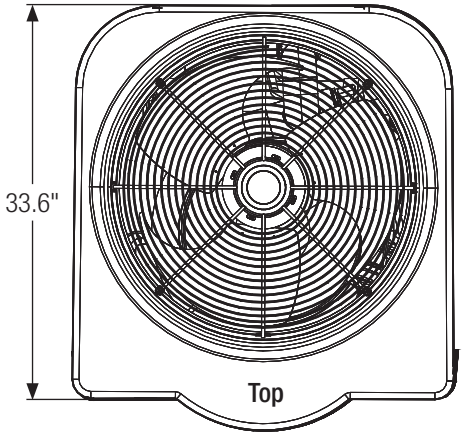

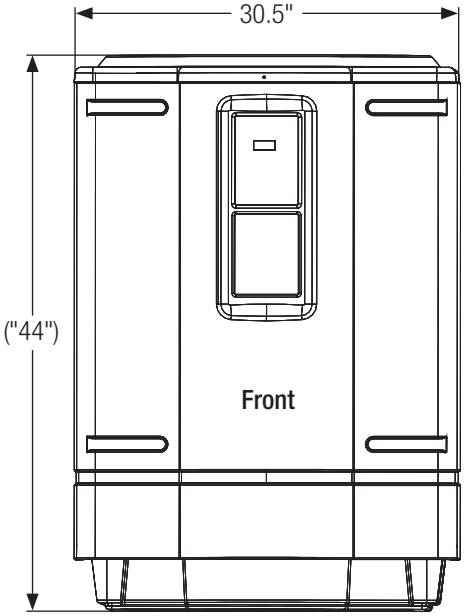

Bottom Rear (Water Connections)

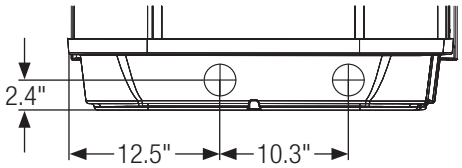

Features

- Titanium heat exchanger for harshest water conditions
- Quiet/Reliable R410A Scroll compressors
- Digital Electronic Control with
  - Easy to read display
  - Dual thermostats for independent pool and spa temperature control
  - Display of diagnostic codes
- UV resistant cabinet for long life
- Defrost function to manage evaporator coil frosting for low ambient temperature operation
- High (590PSI) and low (50PSI) refrigerant pressure switches monitoring extreme operation
- Compressor sound blanket
- Corrosion resistant evaporator

USE ONLY HAYWARD GENUINE REPLACEMENT PARTS

HAYWARD®

TABLE 2: SPECIFICATIONS													
MODEL NUMBER		HP21105T	W3HP21105T	HCB1105T	HP21205T	W3HP21205T	HCB1205T	HP21405T	W3HP21405T	HCB1405T	HP31105T	HP31205T	HP31405T
RATED VOLTAGE (V)		230V~ 60Hz 1Ph											
MCA (A)		38.9	38.9	38.9	38.9	38.9	38.9	42.5	42.5	42.5	38.9	38.9	42.525
REC. BREAKER SIZE (A)		40	40	40	40	40	40	50	50	50	40	40	50
MOP (A)		65	65	65	65	65	65	70	70	70	65	65	70
COMPRESSOR RLA (A)		29.2	29.2	29.2	29.2	29.2	29.2	32.1	32.1	32.1	29.2	29.2	32.1
COMPRESSOR LRA (A)		185	185	185	185	185	185	185	185	185	185	185	185
FAN MOTOR RLA (A)		2.4	2.4	2.4	2.4	2.4	2.4	2.4	2.4	2.4	2.4	2.4	2.4
FAM MOTOR HP (HP)		1/3	1/3	1/3	1/3	1/3	1/3	1/3	1/3	1/3	1/3	1/3	1/3
SHORT CIRCUIT CURRENT (Ka)		5											
RMS SYMM. VOLTAGE (V)		240											
RATED POWER INPUT (W)		5600	5600	5600	6100	6100	6100	8300	8300	8300	5600	6100	8300
MOISTURE RESISTANCE		IPX4											
REFRIGERANT TYPE		R-410A											
REFR. SAFETY GROUP		A1											
REFRIGERANT CHARGE		4lb 10oz	4lb 10oz	4lb 10oz	4lb 14oz	4lb 14oz	4lb 14oz	4lb 14oz	4lb 14oz	4lb 14oz	5lb 0oz	5lb 4oz	5lb 4oz
		2.1 kg	2.1 kg	2.1 kg	2.24 kg	2.24 kg	2.24 kg	2.21 kg	2.21 kg	2.21 kg	2.27 kg	2.27 kg	2.27 kg
MAX ALLOWABLE REFR PRESSURE		575 PSIG											
		3.96 MPa											
HIGH SIDE		340 PSIG											
		2.34 MPa											
LOW SIDE		236 PSIG											
		1.63 MPa											
MIN WATER FLOW		30 GPM											
		114 LPM											
MAX WATER FLOW		75 GPM											
		284 LPM											
REC. WATER FLOW		50 GPM	50 GPM	50 GPM	50 GPM	50 GPM	50 GPM	60 GPM	60 GPM	60 GPM	50 GPM	50 GPM	60 GPM
		190 LPM	190 LPM	190 LPM	190 LPM	190 LPM	190 LPM	230 LPM	230 LPM	230 LPM	190 LPM	190 LPM	230 LPM
MAX WATER INLET TEMP		104 °F											
		40 °C											
WATER OPERATING TEMP		40 - 104 °F											
		4 - 40 °C											
AIR OPERATING TEMP		40-115 °F											
		4 - 46 °C											
WEIGHT		230 LB	230 LB	230 LB	233	233 LB	233 LB	233 LB	233 LB	233 LB	237 LB	240 LB	240 LB
		104 KG	104 KG	104 KG	106 KG	106 KG	106 KG	106 KG	106 KG	106 KG	108 KG	109 KG	109 KG
SHIPPING WEIGHT		278 LB	278 LB	278 LB	281 LB	281 LB	281 LB	281 LB	281 LB	281 LB	285 LB	288 LB	288 LB
		126 KG	126 KG	126 KG	127 KG	127 KG	127 KG	127 KG	127 KG	127 KG	129 KG	131 KG	131 KG
SHIPPING DIMENSIONS (L x W x H)		36.5 x 31 x 49 in											
		93 x 80 x 125 cm											
WATER CONNECTION DIAMETER		2 in											
		5 cm											
WATER INLET TO OUTLET DISTANCE		10.25 in											
		26 cm											
80A-80RH-80W	CAPACITY	110,000	110,000	110,000	120,000	120,000	120,000	138,000	138,000	138,000	110,000	120,000	135,000
	COP	5.7											
80A-63RH-80W	Capacity	100,000	100,000	100,000	110,000	110,000	110,000	128,000	128,000	128,000	100,000	110,000	125,000
	COP	5.5											
50A-63RH-80W	Capacity	75,000	75,000	75,000	75,000	75,000	75,000	82,000	82,000	82,000	75,000	75,000	82,000
	COP	4											
APPROVAL FOR INSTALLATION		Outdoor Use Only											

USE ONLY HAYWARD GENUINE REPLACEMENT PARTS

FIGURE 4: 240 VAC / 60 Hz Singe Phase Wiring Diagram

51300122901 REV A
230 VAC, 1 ~, 60 Hz

Field Wiring 230 VAC
230 VAC
24 VAC

WTS	Water Temperature Sensor	*Pressostat d'eau*	*Interruptor de presión de agua*
DS	Defrost Sensor	*Capteur de dégivrage*	*Sensor de descongelación*
HPS	High Pressure Switch	*Pressostat haute pression*	*Interruptor de alta presión*
LPS	Low Pressure Switch	*Pressostat basse pression*	*Interruptor de baja presión*
FLO	Flow Switch	*Interrupteur de débit*	*Interruptor de flujo*
RV	Reversing Valve	*Vanne d'inversion*	*Válvula de inversión*
C1	Capacitor, Compressor	*Condensateur, compresseur*	*Condensador, compresor*
C2	Capacitor, Fan	*Condensateur, ventilateur*	*Condensador, ventilador*
bo HE	Bypass Operation, Heating	*Fonctionnement en dérivation, chauffage*	*Operación de derivación, calefacción*
bo COL	Bypass Operation, Cooling	*Fonctionnement en dérivation, refroidissement*	*Operación de derivación, refrigeración*
BK	BLACK	*NOIR*	*NEGRO*
BL	BLUE	*BLEU*	*AZUL*
O	ORANGE	*ORANGE*	*NARANJA*
R	RED	*ROUGE*	*ROJO*
V	VIOLET	*VIOLET*	*VIOLETA*
W	WHITE	*BLANC*	*BLANCO*
Y	YELLOW	*JAUNE*	*AMARILLO*

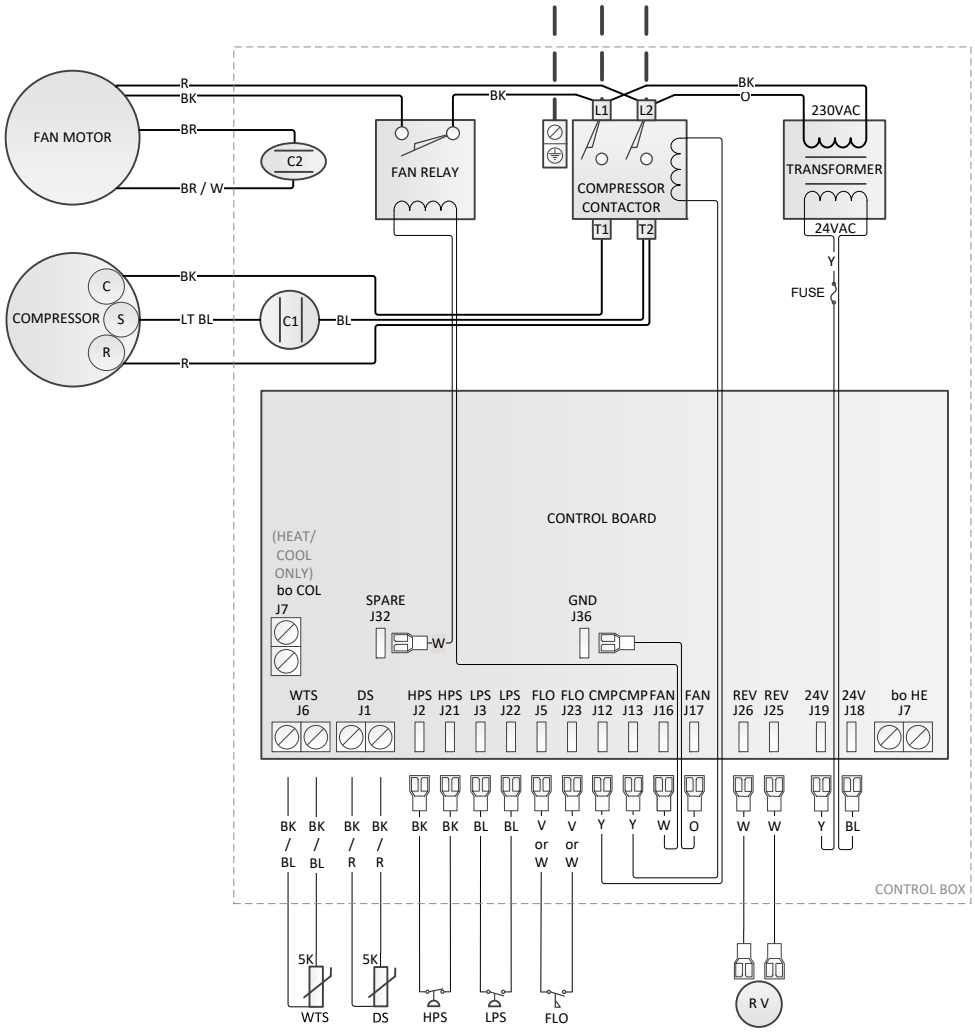

Installation

Read through instructions thoroughly before installation. Installation instructions are intended for use by a qualified technician, specifically trained and experienced in the installation of this type of equipment. Some states or provinces require that the installer be licensed. If this is the case in the state or province where the heater is located, the contractor must be properly certified.

Sprinkler Heads: Be sure that there are no sprinkler heads near the heater that will spray on or into the unit. Many sprinkler systems are connected to a well system whose water is high in minerals, Sulphur, salt and other aggressive contaminates that can cause corrosion and shorten life.

> **NOTICE:** Make sure that sprinklers are placed at a sufficient distance away so that normal wind will not carry the mist to the heat pump.

> **NOTICE:** If located in an oceanfront area, the heat pump should be placed out of direct spray of sand and salt that will clog, damage, and corrode the unit. You may also consider protecting the unit by creating a physical barrier outside of the minimum clearances between the unit and the prevailing beachfront wind.

The Use Of A Pool Cover Is Recommended. A pool cover reduces heat loss, conserves chemicals, lowers the load on filter systems and may provide a valuable safety feature.

Materials Needed For Installation

The following plumbing items are needed.

- 2 inch Isolation Valves qty (3)
- 2 inch Check Valve qty (1)
- 2 x 2 x 2 PVC Tee's qty (2)

For proper installation, appropriate electrical supplies will be needed along with extra hardware items that may be required for anchoring.

> **NOTICE:** Pipe fittings such as reducers, tees, and elbows cause pressure to drop as water flows through them. Plan the plumbing layout carefully, using as few fittings as possible to connect your heat pump. See pad plumbing layout in the Water Piping section for further direction.

Locating The Heater

The installation location of the heat pump is very important for its efficient operation. The heat pump will perform more efficiently when placed in direct sunlight with ample air intake and the avoidance of air re-circulation. Locate the pool heater in an area where its condensation will not result in damage to the area adjacent to the heater or a nearby structure.

> **NOTICE:** DO NOT install the heat pump in a fully enclosed space (i.e. garage, shed etc.).

All criteria given in the following sections reflect minimum clearances. However, each installation must also be evaluated on prevailing local conditions such as proximity and height of walls and public access areas.

Outdoor Installation And Service Clearances: The heater must be installed outdoors such that the installation and service clearances shown in Table 3 and Figure 6 are maintained. Additional installation requirements are as listed:

1. Level surface for proper draining.
2. Suitable electrical supply line. See rating plate on the heat pump units for electrical specifications. A junction box is not needed at the heat pump; connections are made inside the heat pump electrical compartment. Minimum wire size to be selected per NEC based on unit MCA.
3. Electric disconnect switch that will interrupt all power to the unit. This switch MUST be within line of sight to the heat pump.
4. Do not install in a location where growing shrubs may in time obstruct a heater's air flow areas (sides or top).
5. Do not install this appliance under an overhang less than 72in from the top of the appliance. The area under the overhang must be open on (3) sides.
6. Do not install the heater where water spray from ground level can contact the heater. The water could damage coil or reach the controls causing electrical damage.
7. Do not install under a deck.
8. Do not install within 12" of any outdoor HVAC equipment.
9. Do not install where water may run-off a roof into the heater. A gutter may be needed to protect the heater.

CAUTION: Make sure the heat pump is not located where large amounts of water may run-off from the roof into the unit. Sharp sloping roofs without gutters will allow massive amounts of rainwater, mixed with debris from the roof to be forced through the unit (see diagram).

1. A minimum of 12" [31 cm] of clearance on all sides.
2. If the heat pump is to be installed under a cover or vertical overhang, the unit must have a minimum of 72". [183 cm] of clearance from the top of the heat pump to the bottom of the cover or overhang.
3. Install the heat pump a minimum of 60". [1.5 m] from the inside wall of the pool, spa, solid fence, or permanent barrier. (not shown in Figure 6) Canadian installations require a minimum of 120". [3 m] of clearance from pool water.

TABLE 3: Installation Required Clearances	
Heater Panel	Outdoor Clearance
Top	Unobstructed
Front (control)	24 - 36"
Rest of Perimeter*	12"

FIGURE 6: Outdoor Minimum Clearances

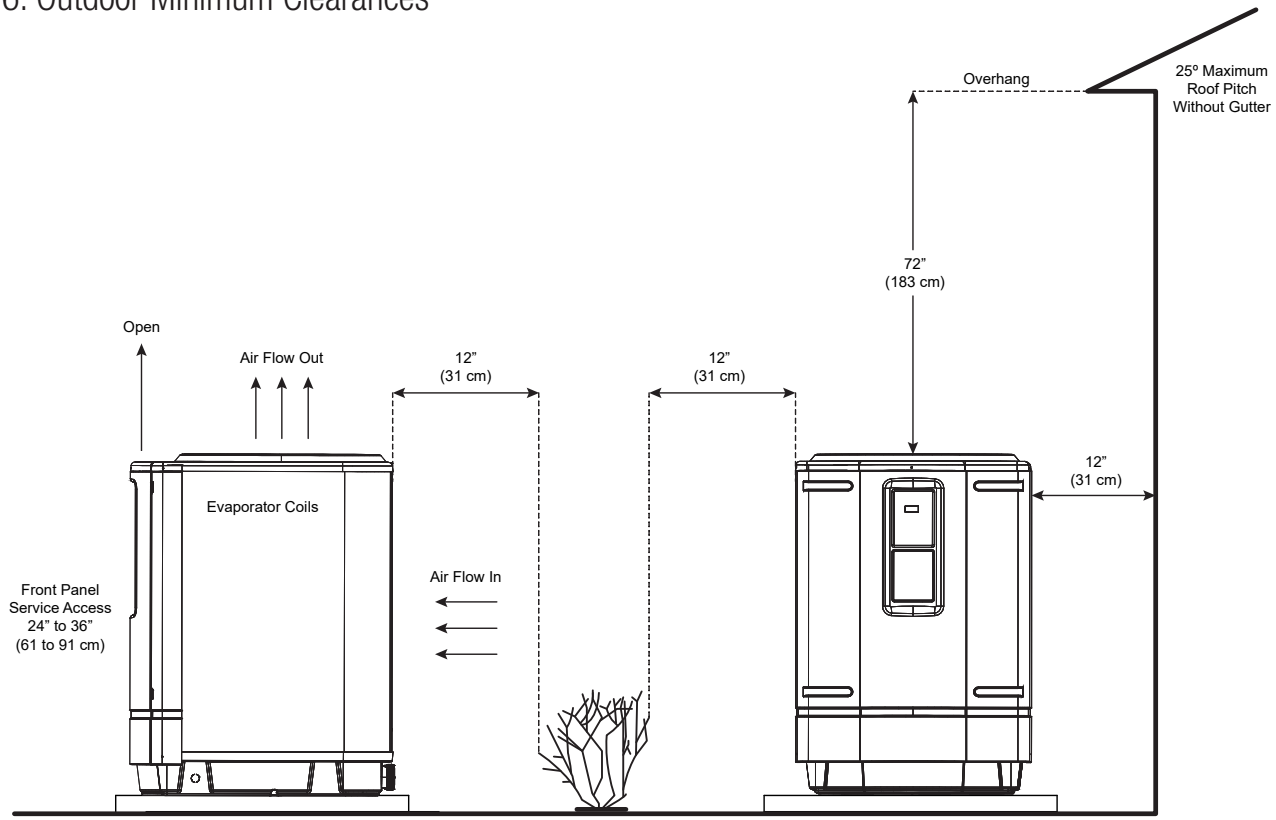

NOTE: The clearances shown above are for best practice and we encourage the use of the best practice clearances when the space is available. Exceptions can be made where the size of the lot or the configuration of fences, walls or other associated structures do not allow for the best practice clearances. Testing has shown our heat pumps can be installed as close as 12" (coil sides) from a restriction (Wall, fence, etc.).

Equipment Pad: Place the heat pump on a level surface such as concrete or a fabricated slab (pad). This allows proper drainage of condensation and rainwater from the base of the unit. If possible, the pad should be placed at the same level or slightly higher than the filter system equipment pad.

Flooring: This heater may be installed on either non-combustible flooring or combustible flooring that does not reduce the bottom clearance of the heater. Ultralite™ or equivalent concrete-over-foam HVAC pads are acceptable.

Drainage And Condensation: Condensation will be produced by the evaporator coil when the unit is running and drain at a steady rate, usually three to five gallons per hour, depending upon ambient air temperature and humidity. The more humid the conditions, the more condensation will be produced.

USE ONLY HAYWARD GENUINE REPLACEMENT PARTS

Anchoring: The heater is equipped for installation of anchoring screws when required by local codes. Follow all relevant Local, State and National requirements regarding wind load anchoring. When anchoring is required to secure the heat pump to concrete pad, use the specified hardware shown in the Figure 7. To complete the installation use the following:

- Anchor Clamps (Included) qty (8), spaced at least 2½" apart
- Concrete tapping screws (Not Included) qty (8), Tapcons® stainless steel, size to be ¼" diameter with a minimum length of 1½"
- Fender washers (Not Included) qty (8), stainless steel, size to be 1½"
-
-

FIGURE 7: Equipment Pad and Anchoring

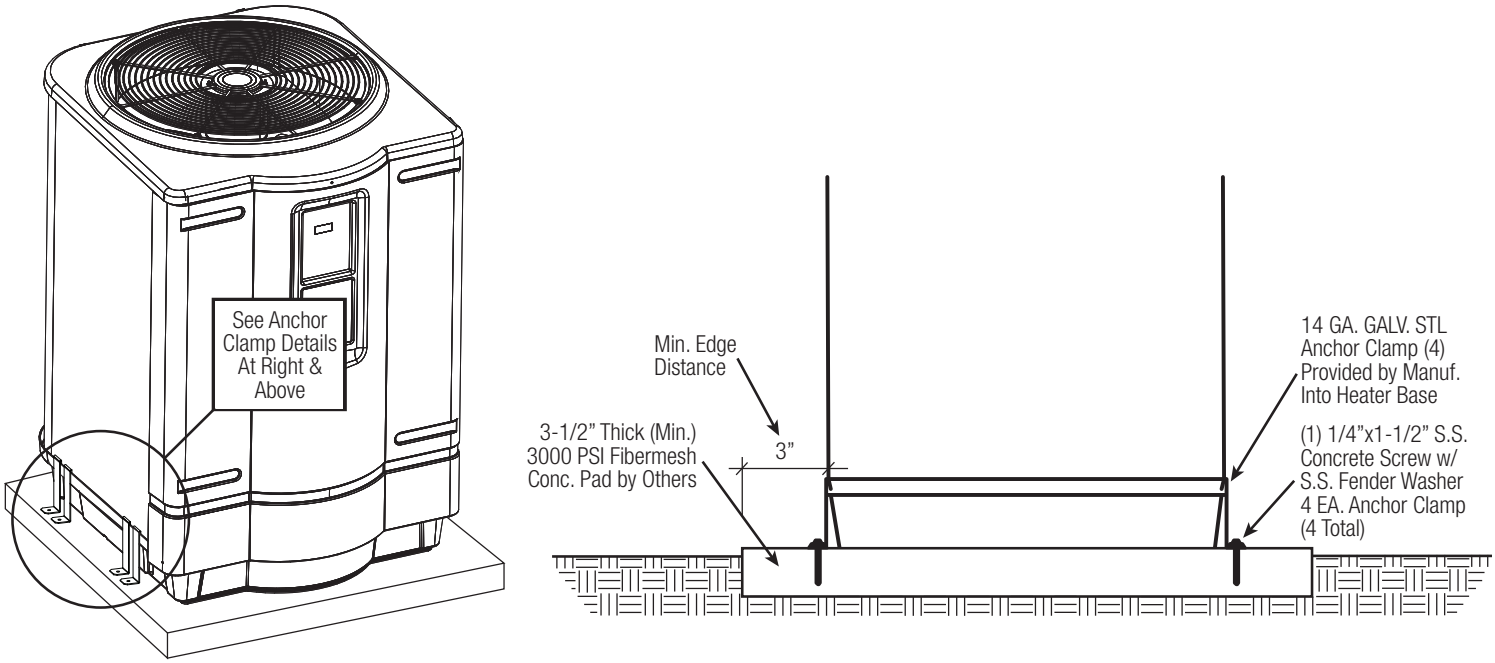

Water Piping

General: The heater is for use with pool and spa/hot tub water furnished by municipal water distribution systems only. Do not use the heater for mineral water, seawater (PPM>5000), or other non-potable waters. These heat pumps are designed for nominal water flows through the condenser. A minimum flow of 30 gpm is required to ensure sufficient heat removal from the condenser, thus avoiding overheating the unit. The minimum flow rate is to be calculated or measured with the in-floor cleaning system in use, if the pool is so equipped, as well as any other jets or other demands on the water flow. Flow rates above 75 gpm will create excessive pressure drop through the condenser and require unnecessarily high pumping energy. Bypass valve setting may be accomplished by temporarily installing a flow meter on the outlet line of the heater. Then adjust the manual bypass valve until the flowrate through the heater is within the flow rate range specified. Once the manual bypass valve is set, note the position and remove the valve handle to prevent accidental adjustment. Failure to install an External Bypass Assembly with a flow rate of 75 GPM can cause damage . Do not install any restriction in the water pipe between the heater outlet and the pool with the exception of; three-way switching valve, in-line chlorinator and/or chlorinator check valve as shown in Figure 8.

USE ONLY HAYWARD GENUINE REPLACEMENT PARTS

FIGURE 8: General Pad Plumbing Layout

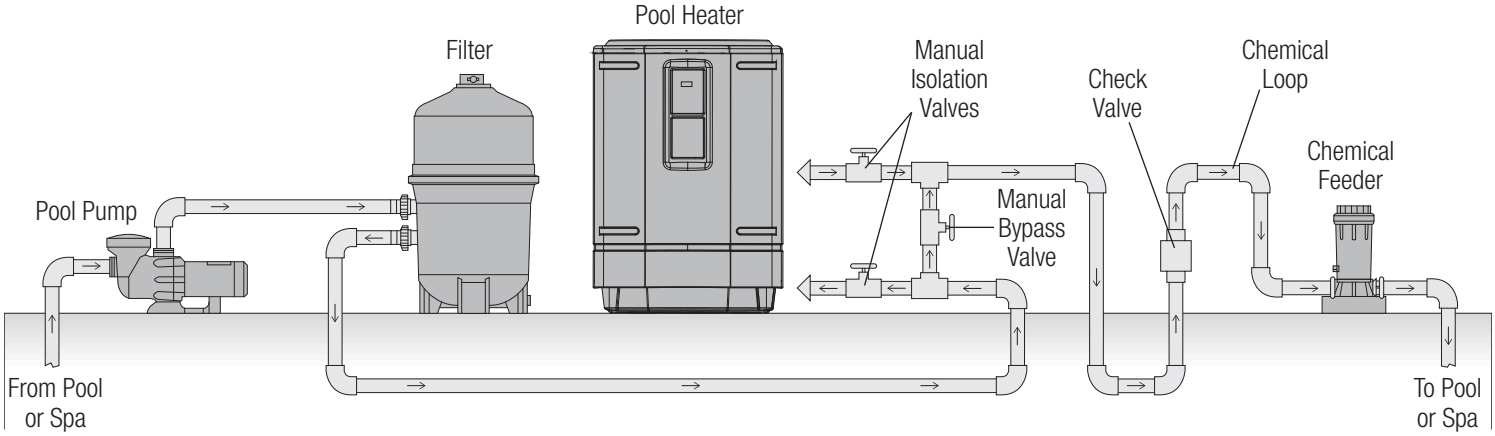

CAUTION: Improperly adjusted manual bypass valves will result in damage to the heater if the flow rates are not maintained under all operating conditions as specified in listed SPECIFICATION.

CAUTION: The heat pump must be protected from back siphoning of water. If there is any chance of back siphoning, provide a check valve between the pool and the filter pump inlet. Failure to follow the instructions may result in property damage due to flooding.

CAUTION: Automatic erosion type chlorinators, if used, must be installed downstream (between the heat pump and the pool) of the heat pump, and a check valve (or Hartford Loop) installed in a manner that will not allow the raw chlorine to drain back to the heat pump when the water pump is off. Failure to follow the instructions may result in property damage.

CAUTION: Do not pour chemicals directly into the skimmer. It could result in damage to your system and heat pump. Arrangement of pool system components other than as illustrated in Figure 8 can affect the operation of the heat pump's water pressure switch. Location of the heat pump above or below the elevation of the pool water surface can also affect operation of the switch. In general, the pressure switch can be adjusted to accommodate this effect if the heat pump water connections are no more than six (6) feet [1,8 m] below the pool water surface or no more than fifteen (15) feet [4,6 m] above it. See instructions for pressure switch adjustment in the START-UP section of this manual. If the heat pump is installed outside of this range, an external pressure switch may need to be installed in the plumbing upstream of the heat pump.

NOTICE: Be advised, that when pool equipment is located below the pool surface, a leak at this lower level can result in large-scale water loss or flooding. Manufacturer is not responsible for water loss or damage it causes.

Unions: The heater is equipped with two detachable union connectors, (2 union nuts and 2 gaskets) included with the heat pump. These fittings must be installed on the heat pump water inlet and outlet to facilitate servicing and winterizing the unit. (See Figure 9). Heat sinks, heat tapes, firemen switches, and check valves are not required on the heater. However, if there is any chance of "back-siphoning" of hot water when the pump stops running, it is suggested that a check valve be used on the heater outlet pipe down stream of bypass system.

FIGURE 9: Included Union Connectors

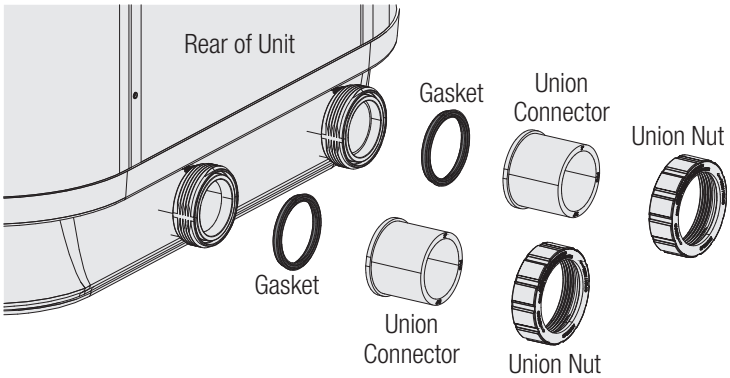

USE ONLY HAYWARD GENUINE REPLACEMENT PARTS

Above Pool Installation

The heater is installed less than three (3) feet above the surface of the pool/spa water, install eyeball fittings or directional flow fittings on the end of the return water line to the pool/spa to create adequate back pressure at the heater to operate the pressure safety switch when the pump is running. If the heater is installed more than three (3) feet above the surface of the pool/spa water, install a loop as shown in Figure 10 to prevent drainage of water in the heater during a filter change. For installation above or below the pool/spa surface, refer to START UP section for proper pressure switch setup.

FIGURE 10: Heater Installation Above Pool

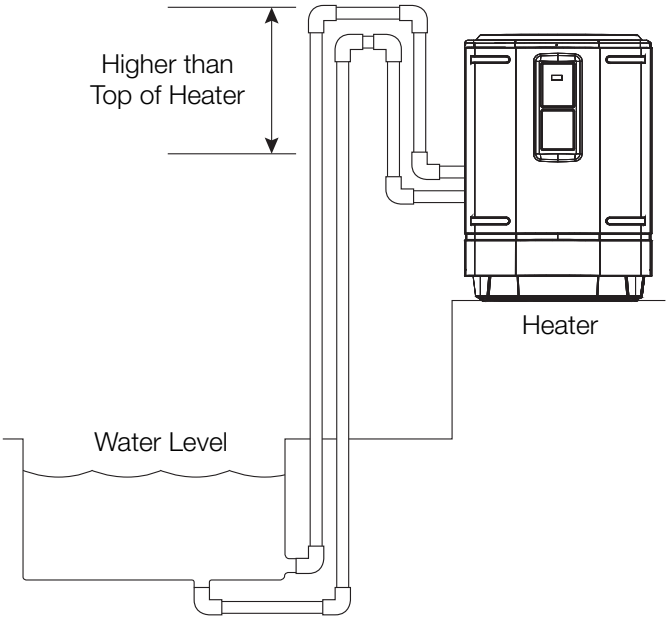

Typical Pool Arrangement

Figure 11 illustrates a typical pool piping diagram and layout for the pool equipment. Also shown is implementation of an optional gas or solar heater system for additional capacity. Other pool heaters, such as gas or solar-powered devices must be installed in a parallel circuit and operated independently (only one at a time) for your warranty to be valid.

NOTICE: Because of the intense heat that can be generated by gas and solar units, isolating it with a shut-off valve and a check valve when gas or solar heater is in operation protects the heat pump. Failure to follow the instructions may result in property damage.

Notes:
1. Isolate the heat pump from hot water flow of heating devices such as gas or solar heater.
2. Install bypass loop for heat pump unit.

FIGURE 11: Typical Plumbing to Pool

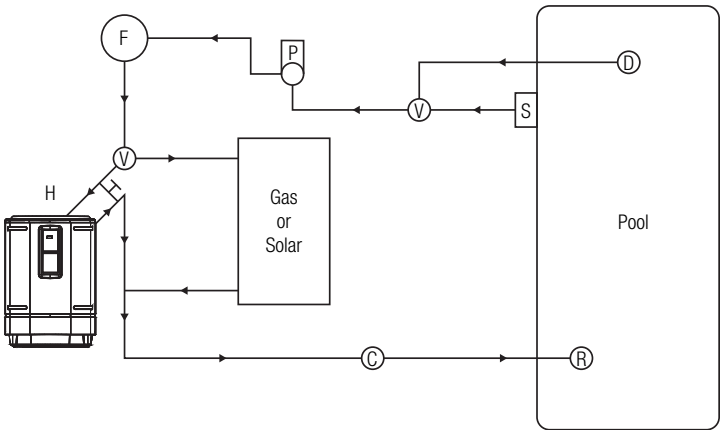

Multiple Heater System

Figure 12 illustrates a multiple heater installation for very large pools with and without a manual bypass valve.

1. Maintain 12" [31 cm] clearance between the units, 12 in. [31 cm] around perimeter, and at least 6 ft [1,8 m] over them. Refer to Locating the Heater section for more details.
2. Install bypass loops for each unit.
3. Install union style fittings from the heat pump CONSUMER KIT adjacent to the unit to facilitate easy service procedures

FIGURE 12: Multiple Heater System

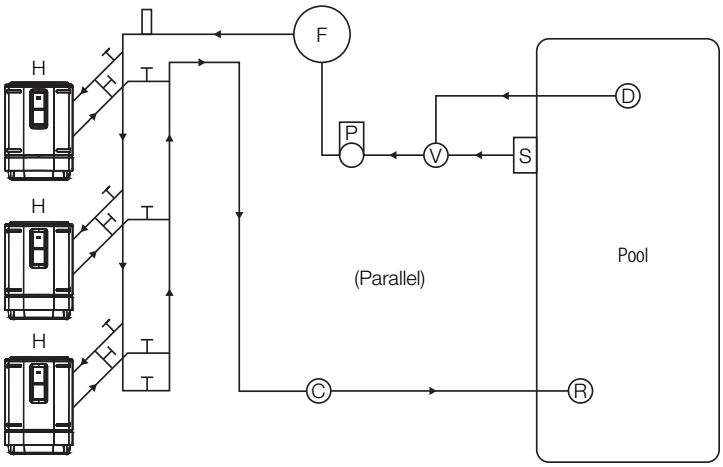

USE ONLY HAYWARD GENUINE REPLACEMENT PARTS

Automatic Chlorinators and Chemical Feeders

If used, a chlorinator must be installed downstream from the heater in the pool return line and at a lower elevation than the heater as shown in Figure 11. Install a separate positive seal corrosion resistant check valve between the heater outlet and the chlorinator to prevent highly concentrated sanitizer from back siphoning into the heater. Back siphoning may occur when the pump is shut off and a pressure differential is created.

Electrical Wiring

General

An external supply of power is required to operate the pool heater system. Review Specifications for this heater in the Before You Begin section to properly size field power connections. All wiring connections to the heater must be made in accordance with the latest edition of the National Electrical Code ANSI/NFPA 70, unless local code requirements specify otherwise. In Canada, follow CSA C22.1 Canadian Electrical Code, Part 1. The heater must be electrically grounded and bonded in accordance with local codes or, in the absence of local codes, with National Electrical Code, ANSI/NFPA 70. Wiring connections must be made as shown in the wiring diagram found inside the heater cabinet, and a copy is provided for convenience in the Before You Begin section at the beginning of the manual. The heater must also have independent ground and bond connections. There is a ground lug inside the control box adjacent to the power connections and a bonding lug on the side of the heater. Use a solid copper conductor, size 8 or larger. Run a continuous wire from external bonding lug to reinforcing rod or mesh. Connect a No. 8 AWG (8.4 mm^2) solid copper bonding wire to the grounding lug provided on the heat pump and to all metal parts of swimming pool or spa, and to all electrical equipment, metal piping (except gas piping), and conduit within 5 ft. (1.5 m) of inside walls of swimming pool or spa. IMPORTANT - Reference NEC codes for all wiring standards including, but not limited to, grounding, bonding and other general wiring procedures.

WARNING: Risk of Electric Shock Review all safety information provided in the Before You Begin section of this manual prior to servicing. Always disconnect power circuit before connecting the heat pump, or working on the heat pump. This equipment contains wiring that carries high voltage. Contact with these wires could result in death or personal injury and/or may also cause property damage.

WARNING: All electrical wiring MUST be in conformance with all applicable local codes, regulations and the National Electric Code (NEC), in particular NEC Article 680: Swimming Pools, Fountains & Similar Installations and Article 440: Air-Conditioning & Refrigeration Equipment.

NOTICE: If voltage drops below 208V, damage may occur. Take proper steps to ensure correct voltage at the heat pump during operation.

Electrical Connections

Turn OFF source power to the heat pump before working on electrical connections. Any unused openings must be plugged and all wiring secured for proper strain relief. The power connections are to be made on the contactor terminals located in the control box (see Figure 13 Power Connections). Plug any unused openings with the supplied caps.

FIGURE 13: Power Connections

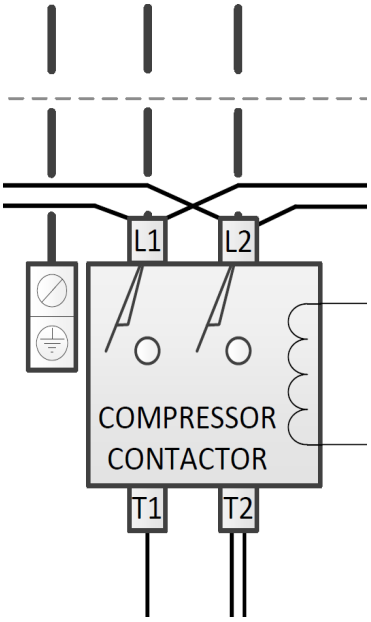

Remote Control Connection

The heater is equipped for remote control via independent 2-wire connections. Heat Only models connect the remote relay to terminal J7. Heat/Cool models connect the heating remote relay to terminal J7 and cooling remote relay to terminal J28. (See Figure 14 for remote on/off connections).

1. Connect the Heating remote relay to the J7 connection and the Cooling remote relay to J28 connection L(if applicable) on the control board.

2. Turn the unit on. Press and hold both the “MENU” and the “+” buttons until “bo” appears. This enables the bypass operation.

3. In bypass operation, when the relays are open the heater will be off. When the heating relay (J7) is closed, the heater will operate in heating. When the cooling relay (J28) is closed, the heater will operate in cooling. The temperature control is done remotely through the remote relays.

4. The heater will shut off when both relays are open or the inlet temperature exceeds 104°F.

5. If both relays are closed, the heater will operate in heating mode.

Note: The unit must be “On” to operate in bypass mode. In bypass operation “bo” mode, the heater will only respond to the remote relay closure. To return to local set point control at the heater, press and hold both the “MENU” and the “+” buttons until “n” appears. This enables the normal operation mode and the heater will respond to the local set point.

Note: All remote wiring must be run in a conduit separate from incoming power. Use 22 AWG wire for runs less than 30 feet. Use 20 AWG wire for runs over 30 feet. The maximum allowable run is 200 feet.

FIGURE 14: Remote On/Off Control

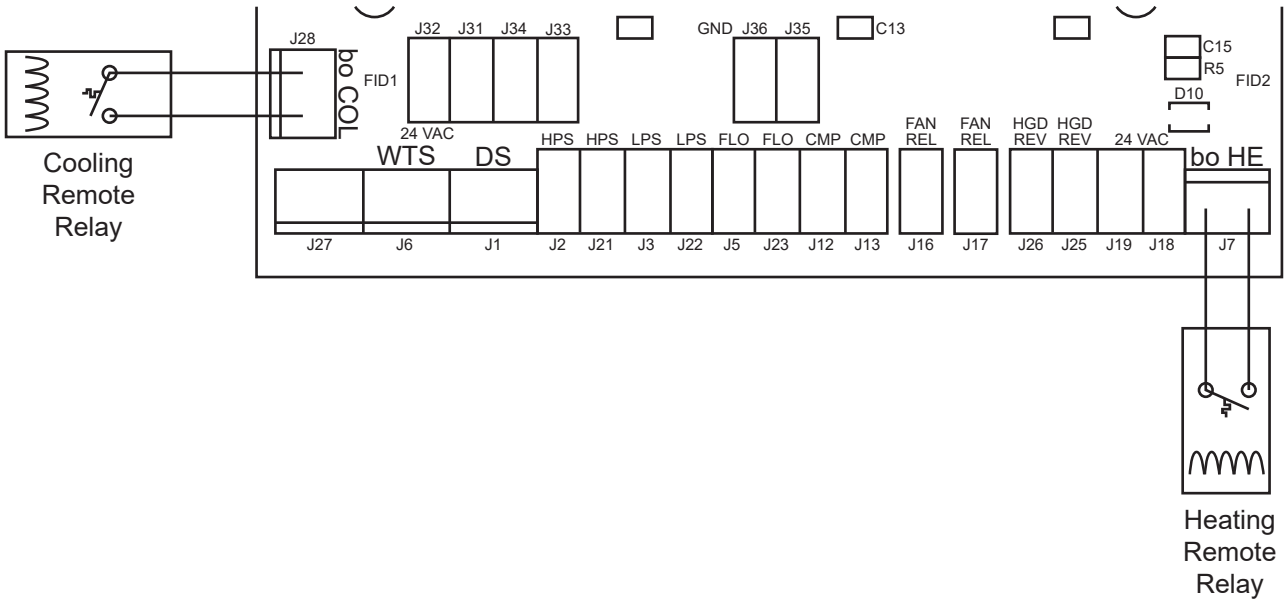

Operation

General

After completing the installation connections to the pool heater, follow the procedures outlined below to ensure that the pool heater is functioning properly. Before proceeding, MAKE CERTAIN there are no water leaks in any plumbing connections or piping and water flow is within the proper flow rate ranges. The heater is equipped with a control system that automatically monitors the water temperature set points and safety devices. As water conditioning is needed, it turns on the compressor to start the appropriate transfer of heat to the water. Figure 15 provides a summary of heater components and their locations in the system. Check that the pump is operating and the system is filled with water prior to starting the heater.

FIGURE 15: Location of Components (Heating Operation Flow Shown)

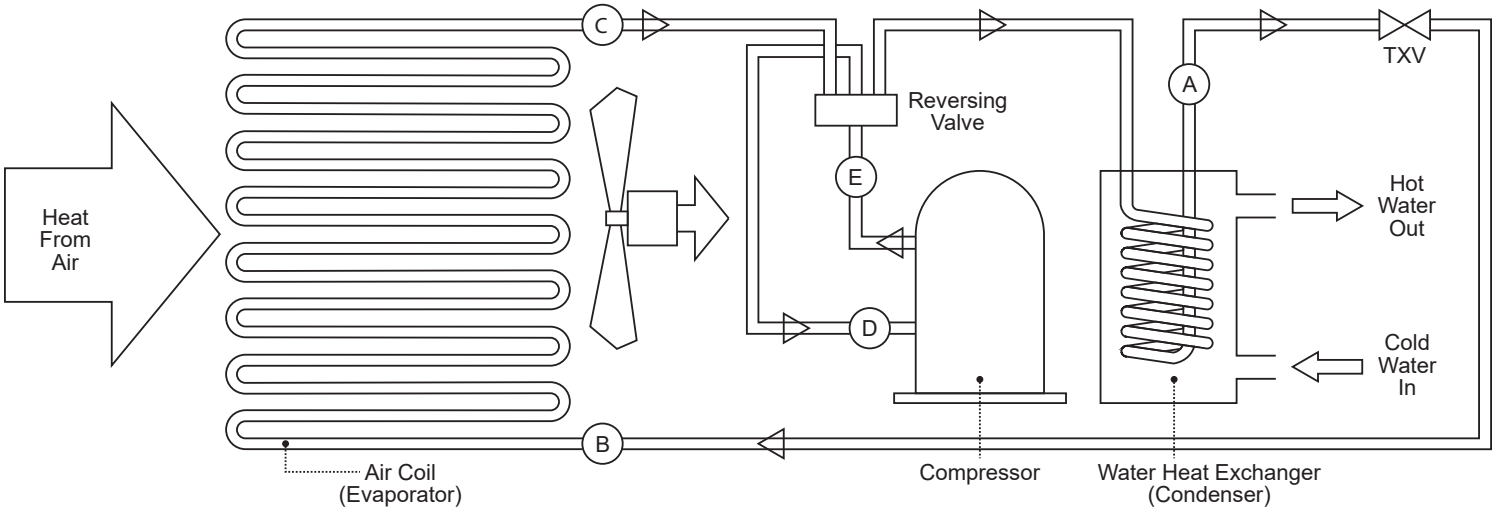

The heat pump takes heat from the environment and uses it to heat the pool water. During heat pump operation, high temperature, high-pressure sub cooled liquid Refrigerant (A) is throttled by Metering Device (TXV) and turned into low temperature, low-pressure saturated liquid (B). The two-phase Refrigerant flows through the Air Coil (Evaporator), where the liquid refrigerant evaporates into vapor by absorbing heat from the surrounding air. At the outlet of the Air Coil (Evaporator) it becomes a low temperature, low pressure superheated vapor (C). The Compressor receives this flow at the suction line (D), and compresses it into a high temperature, high pressure superheated vapor, which is discharged from the Compressor (E) and flows into the Water Heat Exchanger (Condenser). The heat carried by the flow is then released to the pool water. At the same time, the high temperature, high-pressure superheated vapor is then condensed back to high-pressure sub cooled liquid (A), which completes the cycle. The water, which is being forced through the Water Heat Exchanger (Condenser) by the pool pump, is thus heated as it passes through.

Heat Pump Protection Features

These heat pumps are equipped with safeguards that will stop heater operation to protect the unit in case of the following events:

- Excessively high refrigerant pressure
- Excessively high water temperature
- Loss of refrigerant
- Fan Motor Failure
- Evaporator Freeze-up
- Low Ambient Temperature

Control Setup Heat Only Models

This pool heater is equipped with a digital thermostat which allows the user to select the desired water temperature. The heater will then function automatically to maintain the desired temperature. The heater has 3 modes of operation:

1. SPA - in this mode, the heater will automatically function to maintain the water temperature setting for SPA mode.
2. POOL - in this mode, the heater will automatically function to maintain the water temperature setting for POOL mode.
3. REMOTE OPERATION - In this mode the heater will respond to a remote call for heat or to control unit operation mode. Use the set button in Figure 16a to select POOL/SPA modes. The arrows will indicate which mode is currently active.

Control Setup Heat/Cool Models

This pool heater is equipped with a digital thermostat which allows the user to select the desired water temperature. The heater will then function automatically to maintain the desired temperature. The heater has 4 modes of operation:

1. HEAT - in this mode, the heater will automatically function to maintain the water temperature setting for HEAT mode.
2. COOL - in this mode, the heater will automatically function to maintain the water temperature setting for COOL mode
3. AUTO - in this mode, the heater will automatically function to maintain the water temperature setting for AUTO. It will operate in HEAT or COOL mode as required.
4. REMOTE OPERATION - In this mode the heater will respond to a remote call for HEAT or COOL mode. Use the set button in Figure 16b to select HEAT/COOL/AUTO modes. The arrows will indicate which mode is currently active.

USE ONLY HAYWARD GENUINE REPLACEMENT PARTS

FIGURE 16a: Heat Only User Interface Keypad

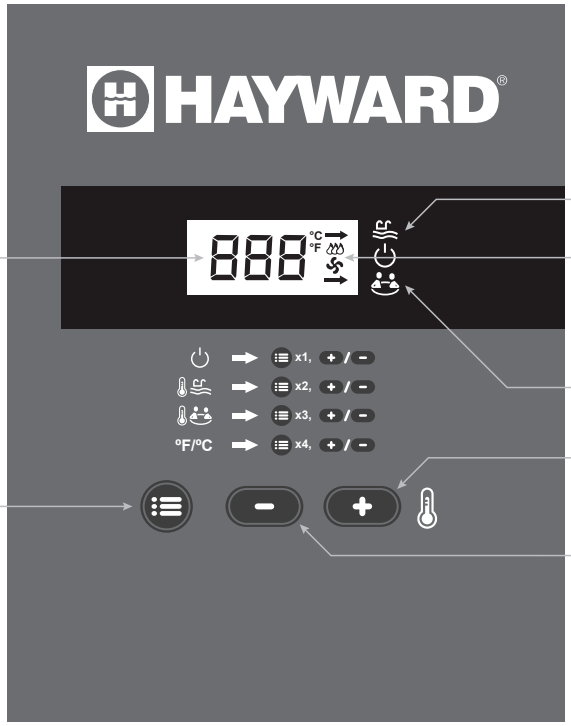

Display Window: When powered is supplied to the unit, the display will either show sensor temperature (in degrees F or C) or the diagnostic code.

Menu Button: Activates the On/Off, Pool, Spa, or Temperature function of the controller. Mode is confirmed with Heating Mode Indicator "On/OFF", "POL", "SPA", or "F_C".

Pool Mode

Run Indicators: Confirms the compressor (♨) or fan (✇) operation and the thermostat is controlling a demand for heat.

Spa Mode

Plus "+" Button: Raises the heater's set point temperature or changes parameters.

Minus "-" Button: Lowers the heater's set point temperature or changes parameters.

FIGURE 17a: Heat Only Function Selection

Display

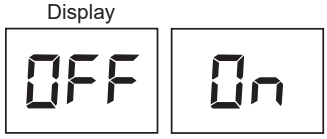

Push the "MENU" button to display the current selection: "On/OFF", "POL", "SPA", or "F_C" will appear. When in "On/OFF" mode, push the "-" button to turn the unit off and the "+" button to turn the unit on.

Push the "MENU" button (x2) until "POL" is displayed. Then use the "-" and "+" buttons to set the Pool temperature set point as shown in display. Setting temperature will place the heater in POOL mode.

Push the "MENU" button (x3) until "SPA" is displayed. Then use the "-" and "+" buttons to set the Spa temperature set point as shown in display. Setting temperature will place the heater in SPA mode.

Push the "SET" button (x4) until "F_C" is displayed. Then use the "-" and "+" buttons to select °F or °C display as shown.

Heat Only Operation

Automatic Reset Time: The heater will automatically reset when an error condition is corrected and resume operation.

Temperature Adjustment: This control allows the user to have 2 individual pre-set temperature settings, “SPA” and “Pool”. To adjust the temperature while in SPA or POOL mode, use the (Plus) and (Minus) buttons. When the numeric display adjustment is complete, the control will return to displaying the actual measured water temperature. The temperature settings for both SPA and POOL modes are initially set at the factory to 65°F. The minimum allowed settings for SPA and POOL modes is 50°F. The maximum allowed settings for heating modes is 104°F.

Dual Pool And Spa Set Points: The unit can keep two temperature settings in memory: one for pool mode (max: 95°F/35°C), and the other for spa mode (max: 104°F/40°C). The heater will operate in the mode that temperature was last selected (i.e. if you push either Plus or Minus in “Pool” mode, the heater will operate in “Pool” mode). Once the heating mode has been programmed, it will be displayed for five seconds, and will then return to the actual pool water temperature. The arrows on the right side of the display indicate the chosen heating mode.

Fahrenheit Versus Celsius: The control will display temperatures in either degrees Fahrenheit or Celsius. To change the temperature display, Press the MENU key until you see F_C and by pressing one of the arrow keys, you can switch to °F or °C. Once the temperature unit has been programmed, it will be displayed for five seconds, and will then return to the actual pool water temperature in the mode that you have chosen.

Defrost Function: The Defrost function is provided to prevent the evaporator coil from freezing when the outside air temperature is near 50°F (10°C). The temperature at which this function will operate is not exact and each unit will vary depending upon conditions surrounding the heat pump, clearance around the heat pump and heat pump maintenance. This time period will vary from 15 minutes to several hours depending on ambient air conditions.

Normal Operation For Pool & Spa Modes: The control continually compares the water temperature with the set point and the high limit temperature. When the water temperature is more than 1° below the set point a call for heat is generated and a heating cycle is initiated.

1. Apply power to the pool heater by plugging in the non-fused disconnect block or moving the circuit breaker to the “ON” position.

2. Make sure the pool filter pump is operating properly.

3. Push the “MENU” button (x1) until “On/OFF” is displayed. Then use plus button to select “On” mode as shown in display. The minus button will select the “OFF” mode.

4. Push the “MENU” button (x2) until “POL” is displayed. Then use plus and minus buttons to set Pool temperature set point as shown in display.

5. Push the “MENU” button (x3) until “SPA” is displayed. Then use plus and minus buttons to set Spa temperature set point as shown in display.

6. Push the “MENU” button (x4) until “F_C” is displayed. Then use plus and minus buttons to select Fahrenheit or Celsius mode as shown in display.

7. The fan will start immediately. Allow 3 minutes for the Heat Pump to start.

8. When the unit starts, confirm that air is being discharged upward from the unit and the air is cooler than the ambient air.

9. Allow the Heat Pump to operate for 10-15 minutes in order for system pressure to stabilize.

10. Using a thermometer, ensure that the discharge air is at least 8ºF (4ºC) cooler than the ambient air temperature. If discharge air does not have at least an 8ºF (4ºC) temperature change, refer to Performance Monitoring / Troubleshooting section in this manual.

11. If Heat Pump fails to start:
    a. Check temperature settings to confirm call for heating

    b. Check water flow and water flow switch

    c. Ensure that power is on

    d. Check TROUBLE SHOOTING SECTION in this manual or Call for service

USE ONLY HAYWARD GENUINE REPLACEMENT PARTS

FIGURE 16b: Heat/Cool User Interface Keypad

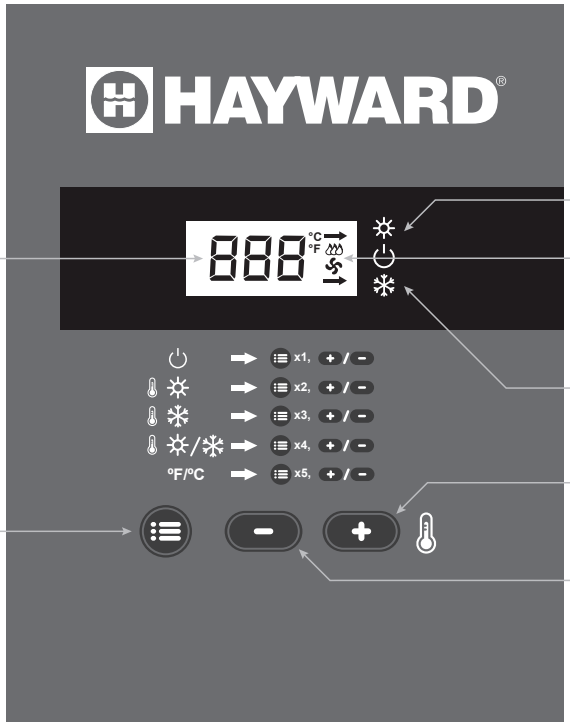

Display Window: When powered is supplied to the unit, the display will either show sensor temperature (in degrees F or C) or the diagnostic code.

Menu Button: Activates the On/Off, Heating, Cooling, or Automatic function modes of the controller. Mode is confirmed with the Mode Indicator "On/OFF", "HE", "COL", "AUt", or "F_C".

Heating Mode

Run Indicators: Confirms the compressor (♨) or fan (🌀) operation and the thermostat is controlling a demand for heat.

Cooling Mode

Plus "+" Button: Raises the heater's set point temperature or changes parameters.

Minus "-" Button: Lowers the heater's set point temperature or changes parameters.

FIGURE 17b: Heat/Cool Function Selection

Push the "MENU" button to display the current selection: "On/OFF", "HE", "COL", "AUT", or "F_C" will appear. When in "On/OFF" mode, push the "-" button to turn the unit off and the "+" button to turn the unit on.

Push the "MENU" button (x2) until "HE" is displayed. Use the "-" and "+" buttons to set Heat Temperature Set Point as shown in display. Selecting the set point will activate heating mode. Max. Temp. is 104°F.

Push the "MENU" button (x3) until "COL" is displayed. Use the "-" and "+" buttons to set Cool Temperature Set Point as shown in display. Selecting set point will activate cooling mode. Min. Temp. is 55°F.

Push the "MENU" button (x4) until "AUt" is displayed. Use the "-" and "+" buttons to set Auto Temperature Set Point as shown in display. Selecting the set point will activate auto mode. Max. Temp. is 104°F.

Push the "MENU" button (x5) until "F_C" is displayed. Use the "-" and "+" buttons to select °F or °C display as shown.

Display

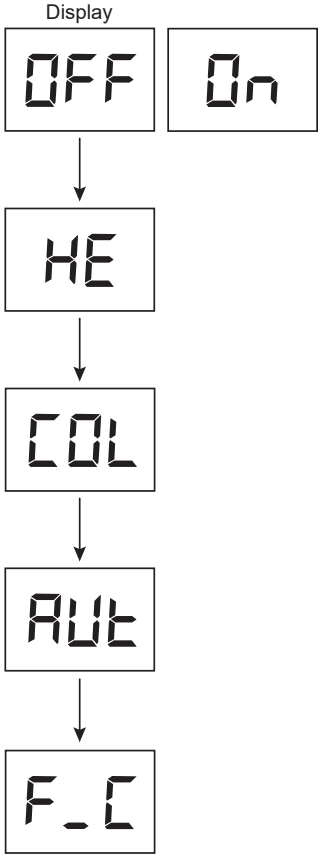

USE ONLY HAYWARD GENUINE REPLACEMENT PARTS

Heat/Cool Operation

Automatic Reset Time: The heater will automatically reset when an error condition is corrected and resume operation.

Temperature Adjustment: This control allows the user to have 3 individual pre-set temperature settings, Heating ("HE"), Cooling ("COL") and Automatic ("AUt"). To adjust the temperature while in Heating, Cooling or Automatic mode, use the (Plus) and (Minus) buttons. When the numeric display adjustment is complete, the control will return to displaying the actual measured water temperature. The temperature settings for both Heating and Cooling modes are initially set at the factory to 65°F. The minimum allowed settings for Heating and Cooling modes is 40°F. The maximum allowed settings for Heating and Cooling modes is 104°F. It is best not to try and set the maximum heating below the minimum cooling set points. FAHRENHEIT VERSUS CELSIUS: The control will display temperatures in either degrees Fahrenheit or Celsius. To change the temperature display, Press the MENU key until you see F_C and by pressing one of the arrow keys, you can switch to °F or °C. Once the temperature unit has been programmed, it will be displayed for five seconds, and will then return to the actual pool water temperature in the mode that you have chosen.

Defrost Function: The Defrost function is provided to prevent the evaporator coil from freezing when the outside air temperature is near 50°F (10°C). The temperature at which this function will operate is not exact and each unit will vary depending upon conditions surrounding the heat pump, clearance around the heat pump and heat pump maintenance. This time period will vary depending on ambient air conditions.

Normal Operation For Heat, Cool & Auto Modes: The control continually compares the water temperature with the set point and the high limit temperature. When the water temperature is more than 1° below the set point, a call for heat is generated and a heating cycle is initiated.

1. Apply power to the pool heater by plugging in the non-fused disconnect block or moving the circuit breaker to the "ON" position.
2. Make sure the pool filter pump is operating properly.
3. Push the "MENU" button (x1) until "On/OFF" is displayed. Then use plus button to select "On" mode as shown in display. The minus button will select the "OFF" mode.
4. Push the "MENU" button (x2) until "HE" is displayed. Then use plus and minus buttons to set Heating temperature set point as shown in display.
5. Push the "MENU" button (x3) until "COL" is displayed. Then use plus and minus buttons to set Cooling temperature set point as shown in display.
6. Push the "MENU" button (x4) until "AUt" is displayed. Then use plus and minus buttons to set Automatic temperature set point as shown in display. Unit will activate Heating or Cooling as needed to maintain the set point temperature.
7. Push the "MENU" button (x5) until "F_C" is displayed. Then use plus and minus buttons to select Fahrenheit or Celsius mode as shown in display.
8. The fan will start immediately. Allow 3 minutes for the Heat Pump to start.
9. When the unit starts, confirm that air is being discharged upward from the unit and the air is cooler than the ambient air for heating mode and warmer than the ambient air for cooling mode.
10. Allow the Heat Pump to operate for 10-15 minutes in order for system pressure to stabilize.
11. Using a thermometer, ensure that the discharge air is at least 8ºF (4ºC) cooler than the ambient air temperature in heating mode. If discharge air does not have at least an 8ºF (4ºC) temperature change, refer to Performance Monitoring / Troubleshooting section in this manual.
12. If Heat Pump fails to start:
    a. Check temperature settings to confirm call for heating/cooling.
    b. Check water flow and water flow switch
    c. Ensure that power is on
    d. Check TROUBLE SHOOTING SECTION in this manual or Call for service

USE ONLY HAYWARD GENUINE REPLACEMENT PARTS

Water Testing

FIGURE 18: Water Pressure Switch

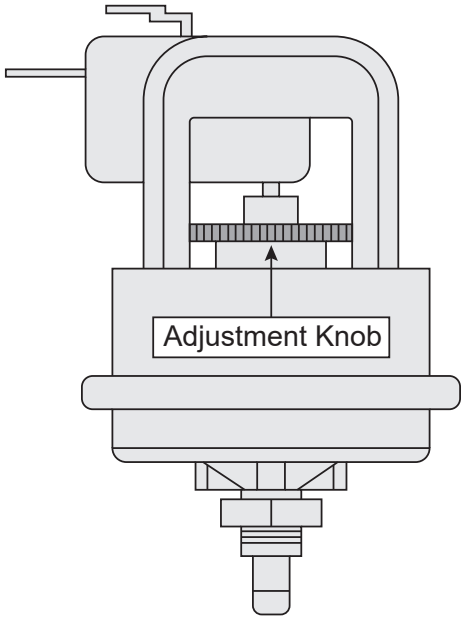

Water Pressure Switch Test / Adjustment Procedure: The heat pump may have either a water pressure switch or a water flow switch installed from the factory. The water flow switch is not adjustable. When the heater is located above or below the level of the pool or spa, the pressure switch will require adjustment to compensate for the change in static pressure. The following procedure is recommended when the switch needs adjustment and/or is replaced:

1. Be sure the filter is clean before making any adjustment.
2. Turn "ON" the filter pump and ensure all air is out of the water lines, and ensure water flow rate is at least the rated minimum (see SPECIFICATION SECTION).
3. Turn "ON" the heater and adjust the temperature control to create a call for heat.

4a. For Installations with Heater above water level: If the heater does not start, adjust the pressure switch by turning the adjustment knob on the pressure switch counter-clockwise, until the heater starts. Turning the adjustment knob counterclockwise decreases the pressure needed to close the switch.

4b. For Installations with Heater below water level: Turn the adjustment knob on the pressure switch clockwise, until the heater turns off, then turn the knob¼ turn counter-clockwise, so that the heater turns back on. Turning the adjustment knob clockwise increases the pressure needed to close the switch.

5. Check the function of the pressure switch by turning the filter pump on and off several times and confirming that the heater turn off immediately when the pump is turned off. Never allow the heater to operate with less than the minimum rated water flow rate.

Two-Speed Pump: In a few cases the pressure from a two-speed pump is below the 1- pound minimum required to operate the water pressure switch on the heater. This is apparent when the pressure switch cannot be further adjusted. In these cases the pump must be run at high speed to operate the heater. If the pump and piping arrangement are such that the required 1-pound minimum pressure cannot be obtained, do not attempt to operate the heater. Correct the installation.

NOTICE: Heater installation, checkout, and start-up should now be completed. Be sure to leave this manual with the pool owner.

Maintenance & Service

Periodic Inspection: The heater is designed and built for long life when installed and operated according to the manufacturer's directions. Regular inspection by qualified service personnel is recommended to keep the heater working properly. The following inspection points are suggested to help maximize heater life:

1. Periodically check the fan discharge area. The fan discharge must never be obstructed in any way and minimum clearances must be observed. Remember that shrubs grow and in time may obstruct
2. Keep the entire pool heater area clean and free of all debris, corrosive materials, and other flammable vapors and liquids. Remove any leaves or paper from around the heater.
3. Do not store chlorine, other pool chemicals, or other corrosives in the vicinity of the heater.
4. Do not use the heater if any part has been under water. Contact a qualified service technician to inspect the entire heater and replace any part of the control system that was under water. If heater has been totally submerged in water it must be removed and the entire heater must be replaced.
5. An inspection program is a good preventative maintenance measure. Keep this manual in a safe place for future reference for yourself as well as for a service technician to consult when inspecting or servicing the heater. Additional inspection procedures to be performed by a qualified service technician.

Water Chemistry

⚠WARNING: Water Chemistry. Failure to maintain proper water chemistry may cause premature heat exchanger damage or failure.

The heat exchanger in your pool heater is made from the highest quality of materials. The titanium condenser is a premium material and the processes used to manufacture the heat exchanger are state of the art in pool heater design and manufacture. However, it remains vital that the heat exchanger be protected from damaging or corrosive chemicals, insufficient water flow or improperly balanced water chemistry. Heat exchanger damage or failure resulting from improper flow, improperly balanced pool water or the improper addition of sanitizer into the water is NOT covered under the terms of the warranty. The following factors are critical to heat exchanger protection. Follow these guidelines to help prevent pre-mature damage or failure to your heater and heat exchanger.

1. **Water Flow Through Heater:** Water must be flowing through the heater at the minimum rated flow rate during operation. Check that the pump is operating and the system is filled with water and purged of all air prior to starting the heater. The minimum rated flow rates are listed in the specifications section. Some installations may require an adjustment to the water pressure switch for proper low-flow protection. Test your system and if necessary, adjust the water pressure switch as described in WATER TESTING SECTION OF MANUAL.

2. **Water Chemistry:** The chemistry balance and mineral content of swimming pool and spa water changes rapidly due to the addition of sanitizing chemicals, user loads, exposed rain, effect of sun, and more. Improper chemistry balance and mineral content can cause scaling and deposits to form on pool walls, in the filtration system, in the heat exchanger tubes and additionally can promote corrosive action to all metals in the water path. Changing spa water regularly and maintaining the correct chemical balance in your pool/spa will keep the pool/spa safe and sanitary, and will help heat exchanger longevity. Use a 4-way pool/spa water test kit to check your water frequently (at least weekly). Use the following guidelines to help maintain proper water chemistry:

TABLE 4: Water Chemistry

Chemical	Recommended Level	Effect of Low Levels	Effect of High Levels
Chlorine	1 - 3 ppm	Hazy water, algae growth, bacteria causing infections	Swimmer irritation, bleaching of clothes/hair, corrosive to heat exchanger
Bromine	2 - 4 ppm		
pH	7.4 - 7.6	Corrosive to heat exchanger, swimmer irritation	Cloudy water, scaling of heat exchanger, reduced sanitizer effectiveness
Total Alkalinity	80 - 120 ppm	Corrosive to heat exchanger, large fluctuations in pH	Scaling of heat exchanger
Calcium Hardness	200 - 400 ppm	Corrosive to heat exchanger	Scaling of heat exchanger
Salt	2700 - 5000 ppm	Poor salt chlorinator performance	Corrosive to heat exchanger

3. **Skimmer Chlorination:** Placing chlorine or bromine Tablets directly into the skimmer may result in high chemical concentrations flowing through the heater. DO NOT place chlorine or bromine Tablets in the skimmer.

4. **Chlorinator Installation:** Chlorinators must be installed downstream of the heater, and a check valve must be installed between the heater and chlorinator to prevent high chemical concentrations from back flowing into the heater. Make sure your piping arrangement meets the chlorinator installation requirements as shown on page 11.

5. **Use Bypass:** Until water chemistry is properly balanced, so that corrosive and potentially damaging water will not flow through the heater and therefore the heat exchanger. Close the bypass valve once the water is properly balanced. Ensure water flow through the heater is restored before operating the heater. A bypass feature is also advantageous for service needs and for the ability to remove the heater from the water path when not heating.

⚠ WARNING: Bypass. Failure to close the bypass valve when attempting to operate the heater will result in extensive damage to the heat exchanger.

Winterization

In moderate climates, the heater can continue to operate during short-term cold spells. Do not use the heater to maintain the water temperature just above freezing or for freeze protection. Care must be taken to avoid freeze-up in the heater. When it is used during freezing weather, the pump must run continuously. The heater is not warranted against freeze-ups. In regions where freezing temperatures are encountered, all water must be drained from the heater when it is out of service, to prevent damage to the heater and piping. Draining the heat exchanger is recommended as part of the season's shutdown procedures.

NOTICE: A heater damaged by freezing is not covered under the manufactures warranty.

Draining The Heat Exchanger: This procedure applies to installations where the heater is located higher than the pool water level. If it is necessary to drain a pool heater located below the pool water level, you must either partially drain the pool, or isolate the pool heater from the pool using valves, then perform draining the heat exchanger.

1. Set the heater to STANDBY mode using the keypad.
2. Turn the electricity to the heater OFF at the circuit breaker panel.
3. Be sure the circulating pump is OFF.
4. If no drain plug is provided, open lower inlet water union and allow all water to drain from the heater.
5. Re-install the drain plug or reattach the water union.

USE ONLY HAYWARD GENUINE REPLACEMENT PARTS

Spring Start-Up: This procedure should be performed annually to ready your heater for the upcoming season. In addition to the steps outlined below, it is recommended that a PERIODIC INSPECTION also be performed.

1. Inspect and clean the heater, being sure the heater is free of leaves and debris prior to startup.
2. Properly attached inlet and outlet piping and confirm the drain valve is closed.
3. Turn the filtration system pump ON and allow the system to run long enough to purge all the air from the lines.
4. Turn the electricity to the heater ON at the circuit breaker panel.
5. Set the temperature control using the keypad to an operating mode ("POOL", "SPA", "HEAT", "COOL" or "AUTO") and adjust the set point to the desired temperature setting.
6. If operating difficulties are encountered, contact a qualified service company for assistance.

Component Service

NOTICE: Only qualified service technicians, with appropriate test equipment, should be allowed to service the heater. For conditions where refrigerant must be managed, an EPA certified technician is required. All of the components that comprise the system have an effect on heater operation. Before proceeding with heater related troubleshooting tips, be certain that the pump is operating correctly, the filters and strainers are not blocked, the valves in the piping are properly positioned, and the time clocks are properly set.

⚠ WARNING: Explosion Hazard. Do not attempt to repair broken or faulty components of this heater. Do not modify the heater or its components in any manner. To do so may result in a malfunction that could result in death, personal injury, or property damage. Check with the pool owner to see if any part of the heater has been under water. Replace any electrically operated component that has been under water.

⚠ WARNING: Risk of Electric Shock. Review all safety information provided in the Before You Begin section of this manual prior to servicing. Always disconnect power circuit before connecting the heat pump, or working on the heat pump. This equipment contains wiring that carries high voltage. Contact with these wires could result in death or personal injury and/or may also cause property damage.

Control System: The control system in this heater consists of the display keypad/control board and the terminal board. The locations of these components are shown in Figure 5. The control board functions as the heater's thermostat operator and safety control system, To remove/replace the display keypad/control board:

1. Turn pump and heater power OFF.
2. Remove the front access panel.
3. Disconnect all wires from the printed circuit board.
4. Detach the board from the access panel by removing the mounting screws.
5. Replace the board, and reverse the above steps to reassemble.

Thermistor: The thermistor monitors the return water temperature to thermostatically control pool and spa water to the selected temperature and to shut the heater off is the return water reaches 104 F. To replace the thermistor:

1. Turn pump, and heater power "OFF".
2. Remove the front access panel.
3. Unplug the thermistor connector from the terminal board.
4. Undo wire connection in the control box and push leads through the hole in the control box.
5. Withdraw the thermistor from the well in the water header.
6. Replace the thermistor.
7. Reverse steps above to complete the procedure.

Water Pressure Switch / Flow Switch: The water pressure switch (Figure 18) is preset at the factory for most typical, deck level installations. When the heater is located above or below the level of the pool or spa, the pressure switch may require adjustment to compensate for the change in static head pressure. If adjustment is needed, the procedure is detailed in Water Pressure Switch Test / Adjustment Procedure. Flow switches are not adjustable. Please verify that there is adequate water flow to meet minimum water flow requirements (see Specifications section)

NOTICE: Do not operate the pool heater without the function of a properly adjusted pressure switch or flow switch.

To replace the pressure switch:

1. Turn pump, and heater power "OFF".
2. Remove hose from switch body external to control box.
3. Remove the wires from the pressure switch.
4. Replace the pressure switch.
5. Reverse steps above to complete the procedure.

To replace the flow switch:

1. Turn pump, and heater power "OFF".
2. Remove the flow switch wires from the control board.
3. Replace the flow switch.
4. Reverse steps above to complete the procedure.

Transformer: The transformer converts the field supply voltage to 24 VAC output for powering the control board. To replace the transformer:

1. Turn pump, and heater power “OFF”.
2. Remove the front access panel.
3. Disconnect all wires from the transformer leads.
4. Remove the (2) screws that secure the transformer to the control box.
5. Replace the transformer. Reassembly is the reversal of steps above.

Contactor: The switches the incoming power to the compressor. To replace the contactor:

1. Turn pump, and heater power “OFF”.
2. Remove the front access panel.
3. Disconnect all wires from the contactor terminals keep track of wire locations.
4. Remove the (2) screws that secure the contactor to the control box.
5. Replace the contactor. Reassembly is the reversal of steps above.

Troubleshooting

Error and Operation Codes: See Table 5: Display Code Index.

Troubleshooting: See Table 6: Troubleshooting Lookup Chart.

Automatic Reset Time: The heater will automatically reset when an error condition is corrected and resume operation.

> **NOTICE:** These instructions are intended for the use of qualified personnel trained and experienced in the installation and servicing of this type of heating equipment and its related system components. Some states may require installation and service personnel to be licensed. Persons not qualified should not attempt to repair this equipment according to these instructions. These instructions and procedures are not for the use of “do-it-yourself” consumers.
>
> **NOTICE:** As a preliminary check, make sure that all wire connections are clean and tight and that all wiring conforms to the wiring diagram.

Internal Wiring: If the heater display is blank after the electrical has been installed, refer to Troubleshooting Lookup Chart to determine the cause. Note, the cable between the display board and the terminal board is keyed to ensure correct connection.

HAYWARD®

TABLE 5: Display Code Index			
Display	**Problem**	**Possible Cause**	**Information**
(blank)	No power to heat pump	Tripped circuit breaker, no power supply	Check breaker and ensure that the unit is properly installed.
		Faulty electrical component	Call for service.
	Unit will not turn on	Master power switch off	Turn on master power switch.
		Unit on 5-minute delay	Wait 5 minutes.
FLo	Water Pressure Switch / Flow Switch circuit open	Low or no water flow	Normal operation for remote on/off.
			Check water flow to heat pump. Ensure pool pump is on.
			Clean your filter.
			Make sure all valves are fully open and bypass valve is closed.
			Turn off fountains, etc.
LP	Low Pressure Switch circuit open	Air flow obstruction	Remove debris, etc. restricting air flow to heat exchanger.
		Low ambient temperature cutoff	Wait for outside temperature to reach 60°F
		Unit low on refrigerant	Call for service.
HP	High Pressure Switch circuit open	Low water flow	Check water flow to heat pump. Ensure pool pump is on.
			Clean your filter.
			Make sure all valves are fully open and bypass valve is closed.
			Turn off fountains, etc.
		High water temp	Check pool temperature. Wait until pool needs heat.
			Call for service.
SO	Water Temperature sensor open	Sensor not connected to control board	Call for service.
SS	Water Temperature sensor short circuit	Sensor or sensor wires shorted	Call for service.
FS	Defrost Mode	Frost buildup on evaporator coil	No action required. Unit is defrosting automatically.
dSO	Coil Temperature sensor open	Sensor not connected to control board	Call for service.
dSS	Coil Sensor short circuit	Sensor or sensor wires shorted	Call for service.

⚠ **WARNING:** To avoid possible outer jacket damage or injury: (1) no materials should be stored against the jacket and (2) care should be taken to avoid unnecessary contact (especially by children) with the jacket.

TABLE 6: Troubleshooting Lookup Chart		
Problem	**Possible Cause**	**Possible Solution(s)**
Unit is not operating	No power to unit	Make sure power is on.
	Breaker is tripped	Check the breaker.
	Thermostat not turned up high enough	Turn thermostat up until unit comes on.
	5-minute delay timer still running	Be sure the 5-minute delay has passed.
	Low water flow	Make sure filter is clean.
		Make sure filter pump is on.
		Unhook cleaning devices.
	Outside temperature too low	Check outside ambient temperature or wait for warmer temperatures to operate (refer to Operation section).
	Fan not functioning	Call for service.
Heat pump is running but is not heating; "Run" light does not come on.	Check output air temperature to input air temperature. Differential should be at least 8°F (4°C).	Low ambient air temperature. Allow outside air temperature to exceed 50°F, then re-check.
	System component failure	Call for service.
Heat pump runs continuously	Thermostat set too high	Turn thermostat down.
	Evaporator is dirty	Clean it by running tap water over the coil without additional nozzle attachment. Do not use pressurized water as it can damage the coil and void warranty.
	Electrical component failure	Turn off pump. If the unit is still running after 2 minutes, turn off the power to the unit and call for service.
Heat pump is cycling on/off too quickly	Bad valve or improper water flow	Check valve settings and ensure water flow is sufficient (is the filter pump running continuously?). If heat pump continues to cycle, turn unit off to prevent compressor damage.
	Low refrigerant, low ambient temp, or high humidity with low ambient temp	Check evaporator coil for severe frost. Turn unit off to prevent compressor damage.
		If heat pump continues to cycle, turn unit off to prevent compressor damage. Call for service.
Water is coming out from bottom of unit	Condensation	This is normal and there is no reason to be concerned.
	Possible water leak	Turn the unit off for several hours, but leave the filter pump running continuously. If water quantity decreases, then it is only condensation. Otherwise, there is a possible leak.

Service Parts List

The following repair parts are available from Hayward and through your local distributor. When ordering parts, include the complete pool heater model number listed on the unit's rating plate, located near the junction boxes on the exhaust side of the heater. (Example: HP21405T) All service must be performed by a qualified technician.

REFRIGERATION PARTS
- Compressor
- Thermal Expansion Valve (TXV)
- Evaporator
- Condenser
- Filter Drier
- Reversing Valve
- Compensator

ELECTRICAL PARTS
- Fan Motor
- Control Board
- Capacitor, Compressor
- Capacitor, Fan
- Contactor
- Fan Relay
- Transformer
- HP Switch
- LP Switch
- Defrost Sensor
- Water Temperature Sensor
- Water Flow Switch
- Water Pressure Switch
- Plug, Compressor
- Instrument Elbow Assembly

MISCELLANEOUS PARTS
- Evaporator Guard
- Fan Blade
- Fan Guard
- Panel-Top Kit, Black
- Panel-Top Kit, Taupe
- Gasket-35 In, Neoprene (Qty 2)
- Bracket, Bottom (Qty 4)
- Fastener, Tree, 1/4 (Qty 25)
- Fastener, U-Type (Qty 25)
- Consumer Kit

HAYWARD® Pool Products Limited Warranty

Hayward Pool Products, Inc., warrants the components of this product to be free from defects in materials and workmanship during the warranty period. Please visit https://hayward.com/support/resources/warranty for product warranty details.

The limited warranty excludes damage from freezing, negligence, improper installation, improper use or care, Acts of God or as specified in installation and operations manual. Parts that fail or become defective during the warranty period shall be repaired or replaced, at our option.

Proof of purchase is required for warranty service. In the event proof of purchase is not available, the manufacturing date of the product will be the sole determination of the purchase date.

To obtain warranty service, please contact the place of purchase or the nearest Hayward Authorized Service Center. For assistance on your nearest Hayward Authorized Service Center, please visit us at https://hayward.com/dealerlocator.

Hayward shall not be responsible for cartage, removal, repair or installation labor or any other such costs incurred in obtaining warranty replacements or repair.

The Hayward Pool products warranty does not apply to components manufactured by others. For such products, the warranty established by the respective manufacturer will apply.

The express limited warranty above constitutes the entire warranty of Hayward Pool Products with respect to its' pool products and is in lieu of all other warranties expressed or implied, including warranties of merchantability or fitness for a particular purpose. In no event shall Hayward Pool products be responsible for any consequential, special or incidental damages of any nature.

Some states do not allow a limitation on how long an implied warranty lasts, or the exclusion of incidental or consequential damages, so the above limitation may not apply to you. This warranty gives you specific legal rights, and you may also have other rights, which vary from state to state.

Hayward Industries, 1415 Vantage Park Dr., Suite 400, Charlotte, NC 28203

***Supersedes all previous publications**

Register your product at https://hayward.com/support/resources/warranty/product-registration

FOR FURTHER INFORMATION OR CONSUMER
TECHNICAL SUPPORT, VISIT OUR WEBSITE AT
www.hayward.com

HAYWARD®

Hayward is a registered trademark
Hayward Industries, Inc. © 2024 Hayward Industries, Inc.

All other trademarks not owned by Hayward are the property of their respective owners.
Hayward is not in any way affiliated with or endorsed by those third parties. For patent information, refer to www.hayward.com/patents.