51300022501 RevE

HAYWARD®

HP50HA2/HP70HA2 Heat Pump

Above Ground & In Ground Pool/Spa Heater

Installation and Operation Manual

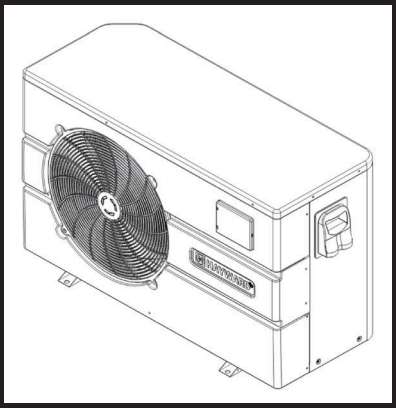

Contents

Safety Instructions.....1
Getting Started.....2
Installation.....9
Water Piping.....11
Electrical Connections.....14
Check Out & Start-Up.....16
Maintenance & Service.....24
Troubleshooting.....26

R-410A

HP50HA2
HP70HA2

Hayward Industries
1415 Vantage Park Dr., Suite 400
Charlotte, NC 28203
Phone: (908) 355-7995
www.hayward.com

IMPORTANT SAFETY INSTRUCTIONS

READ AND FOLLOW ALL INSTRUCTIONS

Basic safety precautions should always be followed, including the following: Failure to follow instructions can cause death and/or severe injury.

This is the safety-alert symbol. When you see this symbol on your equipment or in this manual, look for one of the following signal words and be alert to the potential for personal injury.

WARNING - Warns about hazards that could cause death and/or severe injury or major property damage and if ignored presents a potential hazard.

CAUTION - Warns about hazards that could cause minor or moderate personal injury and/or property damage and if ignored presents a potential hazard. It can also make consumers aware of actions that are unpredictable and unsafe.

NOTICE - Indicates special instructions that are important but not related to hazards.

This Heat Pump is listed by ETL as complying with the latest edition of the UL Standard for Safety for electrical heat pumps, air conditioners, and dehumidifiers UL 60335 and CSA C22.2 No. 60335-1 and 60335-2-40.

All Heat Pumps must be installed in accordance with all applicable National and Local codes. In the absence of local codes, refer to the latest edition of the National Electric Code (NEC) in the United States and the Canadian Electric Code (CEC) in Canada.

This product must be installed and serviced by authorized personnel, qualified in pool/spa heater installation. **Improper installation and/or operation can cause death, serious injury and/or property damage.**

See product rating plate for manufacturer information.

SAVE THESE INSTRUCTIONS

USE ONLY HAYWARD GENUINE REPLACEMENT PARTS

Getting Started

What to Expect When Operating Your Pool Heater

This flow chart provides guidance to protect pool users and product by maintaining good water quality.

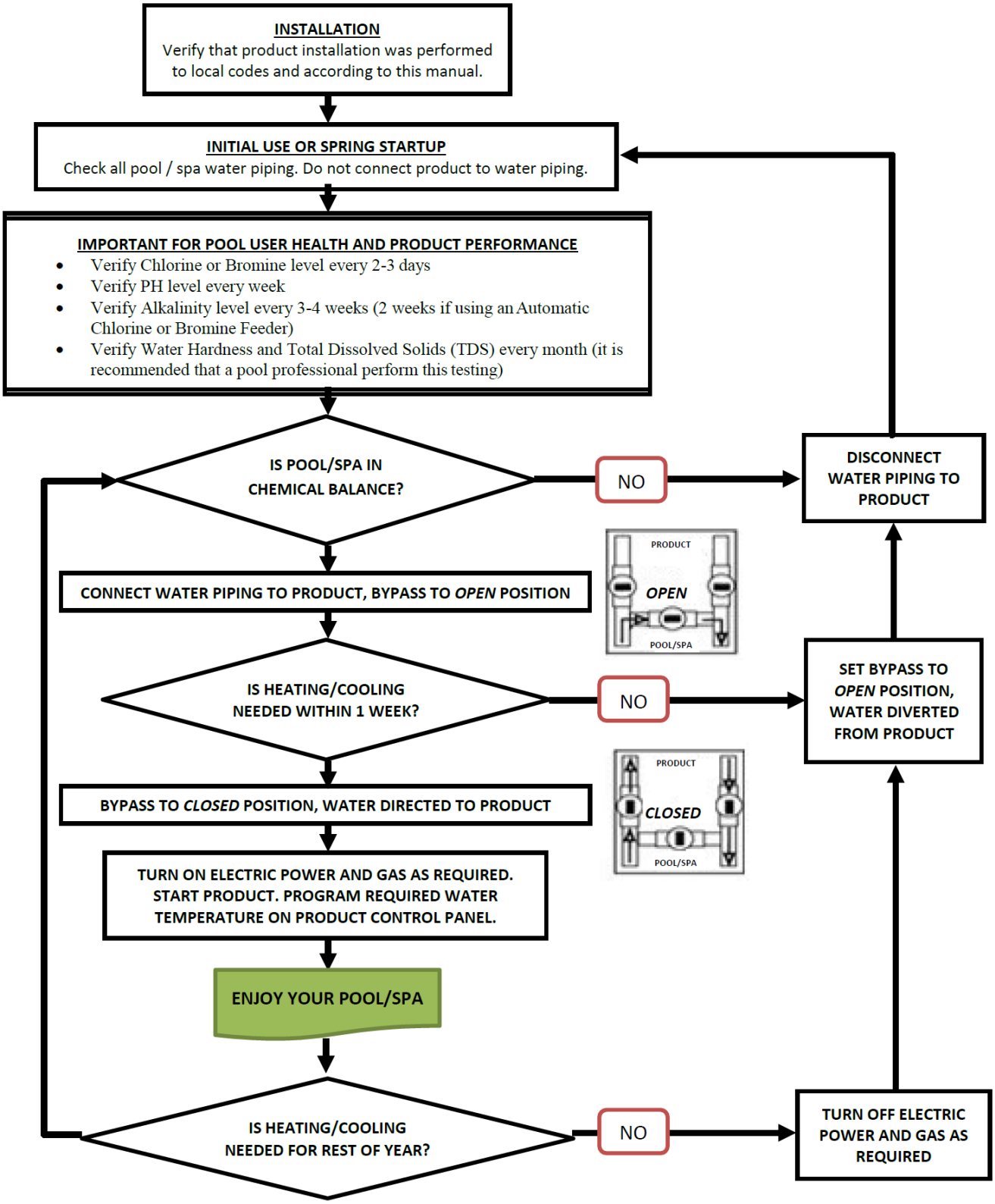

FIGURE 1: Name of Heat Pump components

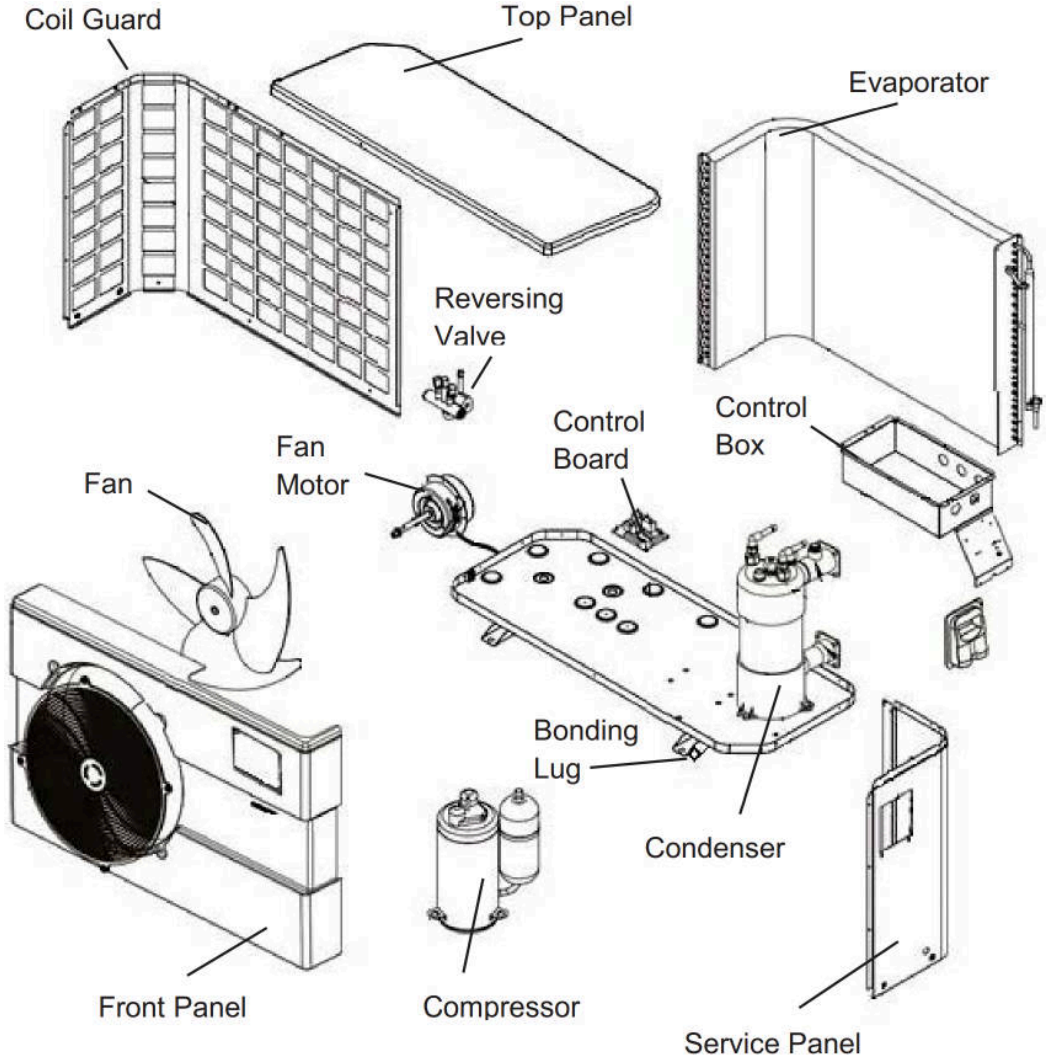

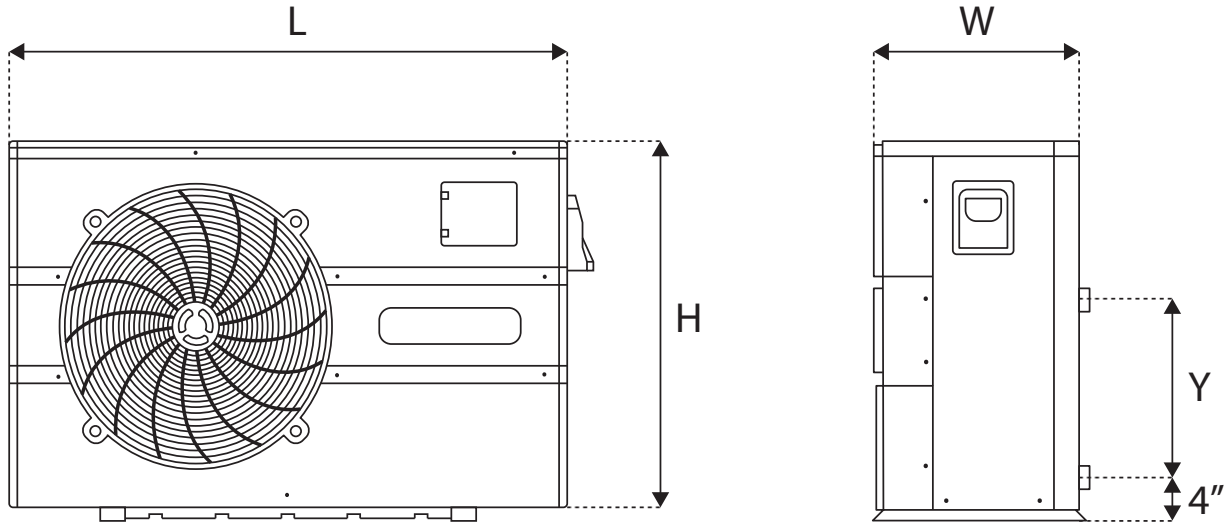

Features

- Titanium heat exchanger withstands the harshest water conditions
- Quiet/Reliable R410A Compressor
- Digital Electronic Control with
  o Easy to read display;
  o Auto mode for automatic heating and cooling operation
  o Display of diagnostic codes
- UV resistant cabinet for long life
- Defrost function to manage evaporator coil frosting for low ambient temperature operation
- High (590PSI) and low (80PSI) refrigerant pressure switches monitoring extreme operation
- Corrosion resistant evaporator fins

TABLE 1: Specifications

Specifications	HP50HA2	HP70HA2
Voltage/Phase/Hz	208-230/1/60	208-230/1/60
Capacity (btu/h) 80A-80RH-80W	47,000	70,000
Power Input, KW (80A-80RH-80W)	2.3	3.9
COP 80A-80RH-80W	6.0	5.3
Capacity (btu/h) 80A-63RH-80W	44,000	65,000
COP 80A-63RH-80W	5.8	5.1
Capacity (btu/h) 50A-63RH-80W	28,500	48,000
COP 50A-63RH-80W	4.0	4.0
Compressor/Fan Motor/System RLA (amp)	14.5/0.5/15	27.1/0.8/27.9
Compressor/Fan Motor/System LRA (amp)	60	70
Min. Circuit Ampacity (amp)	22	35
Max Fuse Breaker Size (amp)	35	60
Recommended water flow (gpm)	20.3	31.2
Minimum water flow (gpm)	16	25
Maximum water flow (gpm)	25	38
Operating water temperature (°F)	48.2/104	48.2/104
Min/Max. operating water pressure (PSI)	43.5/435	43.5/435
Water Connector (dia. in)	1.5' & barb	2" TriStar
Connection Height Y (in)	10.4	16.9
Unit size L x W x H (in)	44.5x17.9.x25.6	45.2x18.5x34.6
Weight (lbs)	152	207
Shipping Weight (lbs)	185	242
Shipping size L x W x H (in)	44.9x18.9x36.3	48.4x19.7x39.8

TABLE 2: Certification And Compliance

Certification Codes And Standards	Usa	Canada
Design Certified	Etl/Its	Etl/Its
Design Compliant	UL 60335-1 UL 60335-2-40	C22.2 No. 60335-1 and 60335-2-40
Installation Compliant Electric	Ansi/Nfpa 70 NEC	Csa C22.1 – Canadian Electrical Code, Part I

CONFORMANCE WITH CODES: The heater shall be installed in accordance with all local and state codes and with the requirements of the authority having jurisdiction of the installing site. The heater installation must conform to the latest edition of the above listed installation codes.

USE ONLY HAYWARD GENUINE REPLACEMENT PARTS

Wiring Connection Diagram

WARNING - Risk of Electric Shock. Before working on any electrical equipment, turn off power supply to the equipment.

WARNING - Risk of Electric Shock. All electrical wiring MUST conform to applicable local codes, regulations, and the National Electric Code (NEC). Hazardous voltage can cause death, shock, burn, and/or serious property damage. To reduce the risk of electric shock, do NOT use an extension cord to connect unit to electric supply. Provide a properly located electrical receptacle. To reduce the risk of electric shock replace damaged wiring immediately. Locate conduit to prevent abuse from lawn mowers, hedge trimmers and other equipment. Do NOT ground to a gas supply line.

FIGURE 2a: Single Phase Wiring Diagram HP50HA2

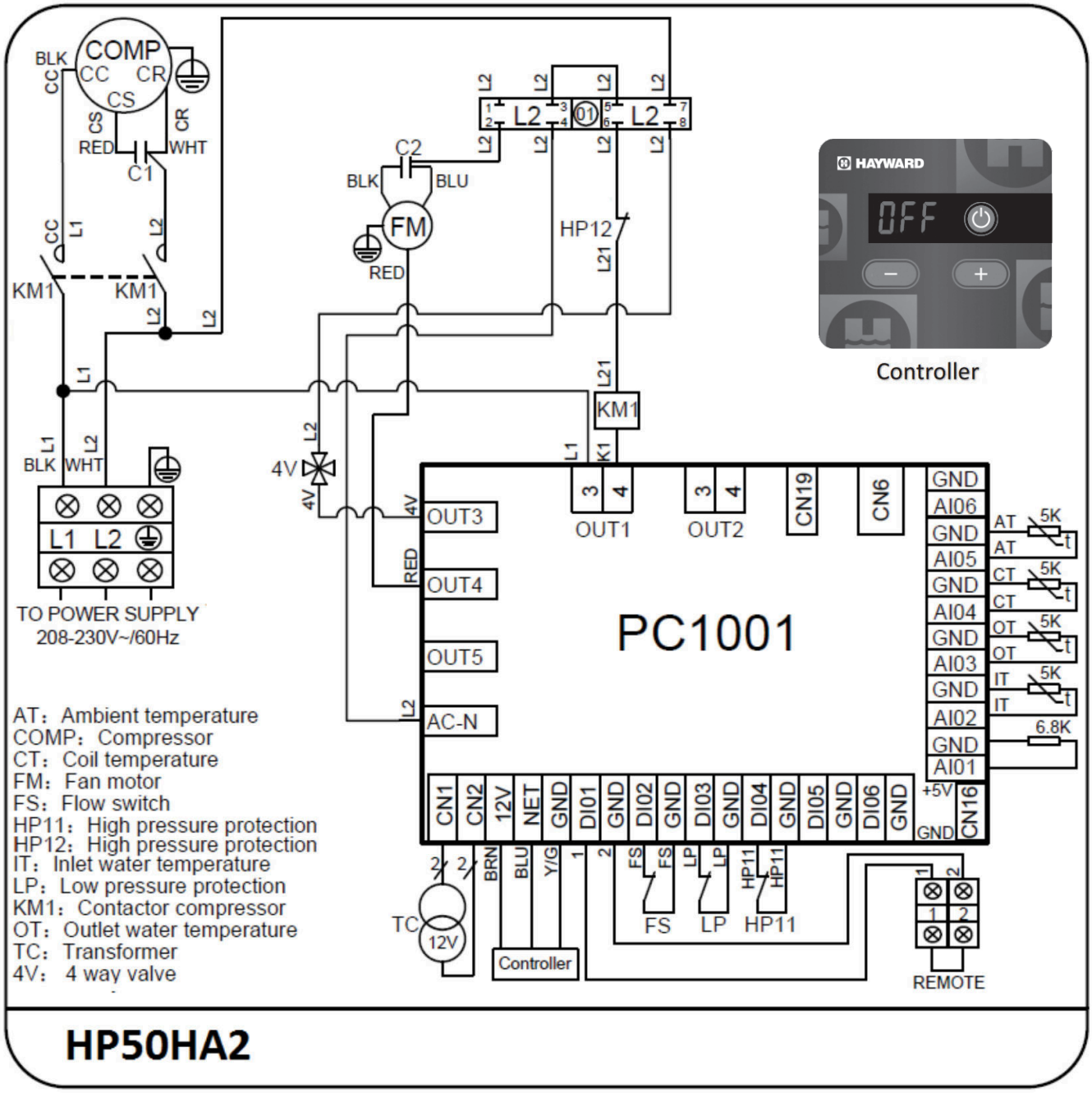

FIGURE 2b: Single Phase Wiring Diagram HP70HA2

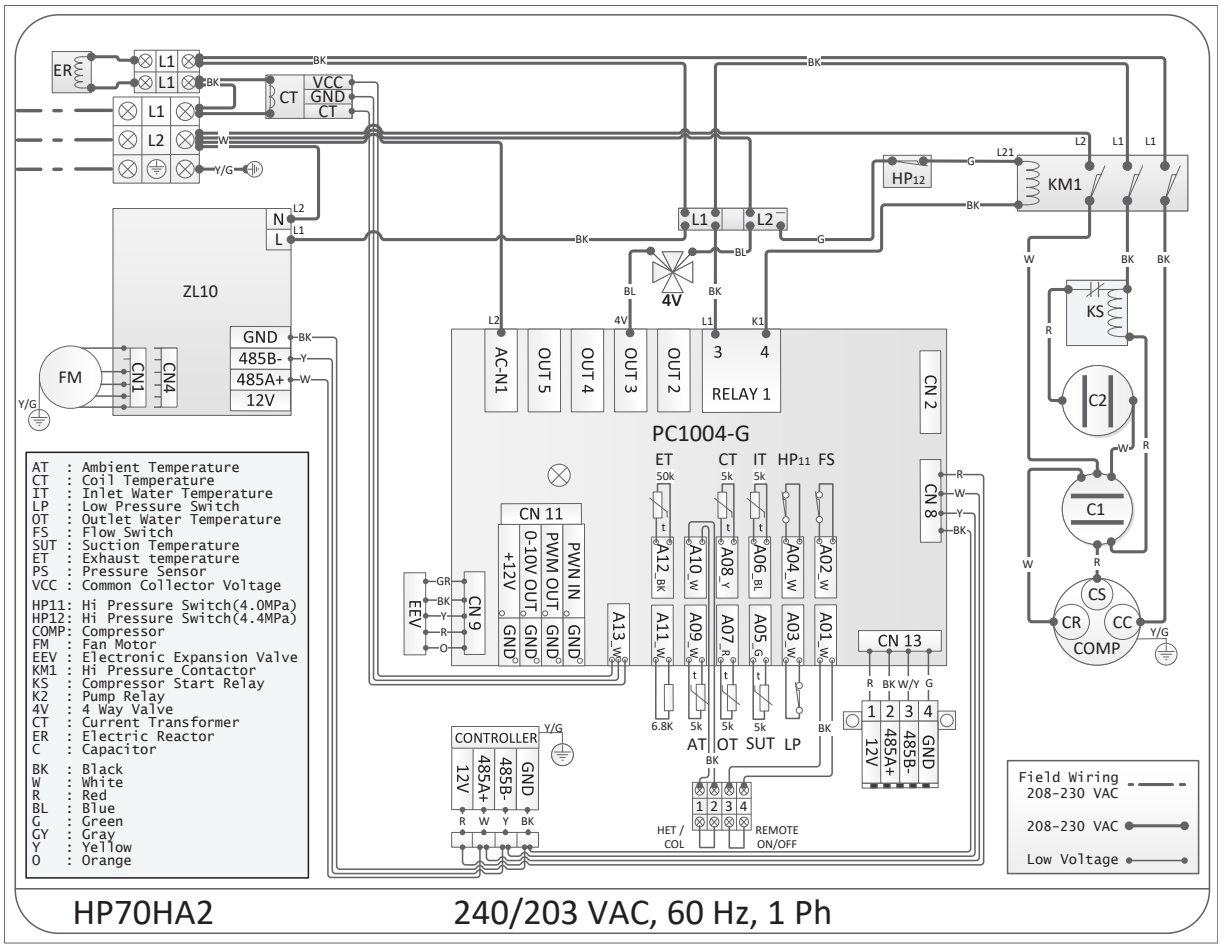

Safety Information

WARNING - Read, Understand, and Follow all Instructions in this manual and on the equipment. Failure to follow instructions can cause death, severe injury and/or serious property damage.

WARNING - **Suction Entrapment Hazard.** Suction in suction outlets and/or suction outlet covers which are, damaged, broken, cracked, missing, or unsecured can cause death and/or severe injury due to the following entrapment hazards:

Hair Entrapment - Hair can become entangled in suction outlet cover.

Limb Entrapment - A limb inserted into an opening of a suction outlet sump or suction outlet cover that is damaged, broken, cracked, missing, or not securely attached can result in a mechanical bind or swelling of the limb.

Body Suction Entrapment - This happens when a negative pressure applied to a large portion of the body or limbs can result in an entrapment.

Evisceration/ Disembowelment - A negative pressure applied directly to the intestines through an unprotected suction outlet sump or suction outlet cover which is, damaged, broken, cracked, missing, or unsecured can result in evisceration/ disembowelment.

Mechanical Entrapment - There is potential for jewelry, swimsuit, hair decorations, finger, toe or knuckle to be caught in an opening of a suction outlet cover resulting in mechanical entrapment.

WARNING - To Reduce the risk of Entrapment Hazards:

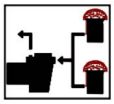

- When outlets are small enough to be blocked by a person, a minimum of two functioning suction outlets per pump must be installed. Suction outlets in the same plane (i.e. floor or wall), must be installed a minimum of three feet (3') [1 meter] apart, as measured from near point to near point.
- Dual suction fittings shall be placed in such locations and distances to avoid "dual blockage" by a user.
- Dual suction fittings shall not be located on seating areas or on the backrest for such seating areas.
- The maximum system flow rate shall not exceed the flow rating of as listed on Table 1.
- Never use Pool or Spa if any suction outlet component is damaged, broken, cracked, missing, or not attached.
- Replace damaged, broken, cracked, missing, or not securely attached suction outlet components immediately.
- In addition two or more suction outlets per pump installed in accordance with latest ASME, APSP Standards and CPSC guidelines, follow all National, State, and Local codes applicable.
- Installation of a vacuum release or vent system, which relieves entrapping suction, is recommended.

WARNING - Failure to remove pressure test plugs and/or plugs used in winterization of the pool/spa from the suction outlets can result in an increase potential for suction entrapment as described above.

WARNING - Failure to keep suction outlet components clear of debris, such as leaves, dirt, hair, paper and other material can result in an increase potential for suction entrapment as described above.

WARNING - Suction outlet components have a finite life, the cover/grate should be inspected frequently and replaced at least every seven years or if found to be damaged, broken, cracked, missing, or not securely attached.

CAUTION - Components such as the filtration system, pumps and heater must be positioned so as to prevent their being used as means of access to the pool by young children. To reduce risk of injury, do not permit children to use or climb on this product. Closely supervise children at all times. Components such as the filtration system, pumps, and heaters must be positioned to prevent children from using them as a means of access to the pool.

WARNING - **Hazardous Pressure.** Pool and spa water heating and circulation systems operate under hazardous pressure during start up, normal operation, and after pump shut off. Stand clear of circulation system equipment during pump start up. Failure to follow safety and operation instructions could result in violent separation of the pump housing and cover, and/or filter housing and clamp due to pressure in the system, which could cause death, severe personal injury and/or property damage, Before servicing pool and spa water circulation system, all system and pump controls must be in off position and filter manual air relief valve must be in open position. Before starting system pump, all system valves must be set in a position to allow system water to return back to the pool. Do not change filter control valve position while system pump is running. Before starting system pump, fully open filter manual air relief valve. Do not close filter manual air relief valve until a steady stream of water (not air or air and water) is discharged.

WARNING - **Separation Hazard.** Failure to follow safety and operation instructions could result in violent separation of pump and/or filter components. Strainer cover must be properly secured to pump housing with strainer cover lock ring. Before servicing pool and spa circulation system, filters manual air relief valve must be in open position. Do not operate pool and spa circulation system if a system component is not assembled properly, damaged, or missing. Do not operate pool and spa circulation system unless filter manual air relief valve body is in locked position in filter upper body. Never operate or test the circulation system at more than 50 PSI. Do not purge the system with compressed air. Purging the system with compressed air can cause components to explode, with risk of severe injury or death to anyone nearby. Use only a low pressure (below 5 PSI), high volume blower when air purging the pump, filter, or piping.

WARNING - **Risk of Electric Shock.** All electrical wiring MUST be in conformance with applicable local codes, regulations, and the National Electric Code (NEC). Hazardous voltage can shock, burn, and cause death or serious property damage. To reduce the risk of electric shock, do NOT use an extension cord to connect unit to electric supply. Provide a properly located electrical receptacle. Before working on any electrical equipment, turn off power supply to the equipment. To reduce the risk of electric shock replace damaged wiring immediately. Locate conduit to prevent abuse from lawn mowers, hedge trimmers and other equipment. Do NOT ground to a gas supply line.

WARNING - **Risk of Electric Shock.** Failure to ground all electrical equipment can cause serious or fatal electrical shock hazard. Electrical ground all electrical equipment before connecting to electrical power supply.

WARNING - **Risk of Electric Shock.** Failure to bond all electrical equipment to pool structure will increase risk for electrocution and could result in injury or death. To reduce the risk of electric shock, see installation instructions and consult a professional electrician on how to bond all electrical equipment. Also, contact a licensed electrician for information on local electrical codes for bonding requirements.

Notes to electrician: Use a solid copper conductor, size 8 or larger. Run a continuous wire from external bonding lug to reinforcing rod or mesh. Connect a No. 8 AWG (8.4 mm2) [No. 6 AWG (13.3 mm2) for Canada] solid copper bonding wire to the pressure wire connector provided on the electrical equipment and to all metal parts of swimming pool, spa, or hot tub, and metal piping (except gas piping), and conduit within 5 ft. (1.5 m) of inside walls of swimming pool, spa, or hot tub. **IMPORTANT** - Reference NEC codes for all wiring standards including, but not limited to, grounding, bonding and other general wiring procedures.

CAUTION - These heaters are intended for use with permanently-installed pools and may be used with hot tubs and spas if so marked. Do not use with storable pools. A permanently-installed pool is constructed in or on the ground or in a building such that it cannot be readily disassembled for storage. A storable pool is constructed so that it is capable of being readily disassembled for storage and reassembled to its original integrity.

WARNING - **Risk of Hyperthermia.** To avoid hyperthermia the following "Safety Rules for Hot Tubs" are recommended by the U.S. Consumer Product Safety Commission.

1. Spa or hot tub water temperatures should never exceed 104°F [40°C]. A temperature of 100°F [38°C] is considered safe for a healthy adult. Special caution is suggested for young children. Prolonged immersion in hot water can induce hyperthermia.
2. Drinking of alcoholic beverages before or during spa or hot tub use can cause drowsiness, which could lead to unconsciousness and subsequently result in drowning.
3. Pregnant women beware! Soaking in water above 100°F [38°C] can cause fetal damage during the first three months of pregnancy (resulting in the birth of a brain-damaged or deformed child). Pregnant women should adhere to the 100°F [38°C] maximum rule.
4. Before entering the spa or hot tub, users should check the water temperature with an accurate thermometer; spa or hot tub thermostats may err in regulating water temperatures by as much as 4°F (2.2°C).
5. Persons taking medications, which induce drowsiness, such as tranquilizers, antihistamines or anticoagulants, should not use spas or hot tubs.
6. If the pool/spa is used for therapy, it should be done with the advice of a physician. Always stir pool/ spa water before entering the pool/ spa to mix in any hot surface layer of water that might exceed healthful temperature limits and cause injury. Do not tamper with controls, because scalding can result if safety controls are not in proper working order.
7. Persons with a medical history of heart disease, circulatory problems, diabetes or blood pressure problems should obtain a physician's advice before using spas or hot tubs.
8. Hyperthermia occurs when the internal temperature of the body reaches a level several degrees above normal body temperature of 98.6°F [37°C]. The symptoms of Hyperthermia include: drowsiness, lethargy, dizziness, fainting, and an increase in the internal temperature of the body.

   The effects of Hyperthermia include:
   - Unawareness of impending danger.
   - Failure to perceive heat.
   - Failure to recognize the need to leave the spa.
   - Physical inability to exit the spa.
   - Fetal damage in pregnant women.
   - Unconsciousness resulting in danger of drowning.

Installation

This manual contains instructions for installation, operation, maintenance, troubleshooting, and parts lists for the proper operation of the swimming pool heaters. Manufacturer strongly recommends that the installer read the manual before installing the swimming pool heater. If after reviewing the manual any questions remain unanswered, contact the factory or local representative. Following heater installation, the installer should leave all manuals with the consumer for future reference.

NOTICE - The installation instructions are intended for the use of a qualified technician, specifically trained and experienced in the installation of this type of heating equipment. Some states or provinces require that installer be licensed. If this is the case in the state or province where heater is located, the contractor must be properly certified.

SPRINKLER HEADS: The heater is designed to handle the wettest weather conditions that are typical of rain and high humidity. Sprinkler heads force high-pressure water into the unit from the side at an odd angle. Make sure there are no sprinkler heads near the heater that will spray on or into the unit. Many sprinkler systems are connected to a well system, whose water is high in minerals, Sulphur, salt and other aggressive contaminates, that will leave a buildup on the unit and electronics causing corrosion and shortens life.

NOTICE -Damage from sprinkler interaction is not covered under the warranty agreement. Make sure that sprinklers are placed at a sufficient distance away so that normal wind will not carry the mist to the heat pump.

NOTICE - If located in an oceanfront area, the heat pump should be placed out of direct spray of sand and salt. This will clog, damage, and corrode the unit. You may also consider protecting the unit by creating a physical barrier outside of the minimum clearances between the unit and the prevailing beachfront wind. Damage caused by sand or salt spray is not covered by the warranty.

THE USE OF A POOL COVER IS RECOMMENDED: A pool cover reduces heat loss, conserves chemicals, lowers the load on filter systems and may provide a valuable safety feature

EQUIPMENT INSPECTION: On receipt of the heater, inspect the heater carton(s) for damage. If any carton(s) is damaged, note it when signing for it. Remove the heater from the carton(s) inspect it and advise the carrier of any damages at once.

NOTICE - Do not drop the heater from a pickup truck tailgate to the ground. This may damage the heater.

NOTICE - The heat pump must not be tipped or transported on its side as evaporator “oil logging” may occur.

MATERIALS NEEDED FOR INSTALLATION

Installer is responsible for providing all external to unit electrical supplies. Extra hardware items may also be required for anchoring. Additional plumbing items needed:

For in ground installations: 2 inch PVC pipe Schedule 40 and 2 inch fittings and components as follows:

- 2 inch Isolation Valves qty (3)
- 2 inch Check Valve qty (1)
- 2 x 2 x 2 PVC Tee’s qty (2)
- 2 x 1 1/2 PVC Adapter qty (2) as required

For above ground installations: 1 1/2inch PVC pipe Schedule 40 or 1 1/2 in clear vinyl tubing. The HP50HA2 comes with the required barb adapter for tubing connection. Included barbed plastic condensation drain fitting is for use on underside of unit base. This fitting is designed to accept 3/4” clear vinyl tubing and should be run to a suitable drain.

NOTICE - Pipe fittings such as reducers, tees, and elbows cause pressure to drop as water flows through them. Plan the plumbing layout carefully, using as few fittings as possible to connect your heat pump. See pad plumbing layout in the WATER PIPING section for further direction.

LOCATING THE HEAT PUMP

The installation location of the heat pump is very important for its efficient operation. The heat pump will perform more efficiently when placed in direct sunlight with ample air intake and the avoidance of air re-circulation. Locate the pool heater in an area where its condensation will not result in damage to the area adjacent to the heater or a nearby structure.

NOTICE - DO NOT install the heat pump in a fully enclosed space (i.e. garage, shed etc.). Such an installation will void its warranty. All criteria given in the following sections reflect minimum clearances. However, each installation must also be evaluated on prevailing local conditions such as proximity and height of walls and public access areas.

OUTDOOR INSTALLATION AND SERVICE CLEARANCES: The heater must be installed outdoors such that the installation and service clearances shown in Table3 and Figure3 are maintained. Additional installation requirements are as listed:

1. Level surface for proper draining.
2. Suitable electrical supply line. See rating plate on the heat pump units for electrical specifications. A junction box is not needed at the heat pump; connections are made inside the heat pump electrical compartment. Minimum wire size to be selected per NEC based on unit MCA.
3. Electric disconnect switch that will interrupt all power to the unit. This switch MUST be within line of sight of the heat pump
4. Do not install in a location where growing shrubs may in time obstruct a heater's air flow areas (sides or top).
5. Do not install the heater where water spray from ground level can contact the heater. The water could damage coil or reach the controls causing electrical damage.
6. Do not install under a deck.
7. Do not install within 24in of any outdoor HVAC equipment.
8. Do not install where water may run-off a roof into the heater. A gutter may be needed to protect the heater.

⚠CAUTION - Make sure the heat pump is not located where large amounts of water may run-off from the roof into the unit. Sharp sloping roofs without gutters will allow massive amounts of rainwater, mixed with debris from the roof to be forced through the unit. Failure to follow the instructions may result in property damage and a voided warranty.

1. A minimum of 24in [610mm] of clearance on all sides.
2. If the heat pump is to be installed under a vertical overhang, the unit must have a minimum of 20in. [500mm] of clearance from the top of the heat pump to the bottom of the cover or overhang.
3. Install the heat pump a minimum of 60in. [1.5m] from the inside wall of the pool, spa, solid fence, or permanent barrier (not shown in Figure3). Canadian installations require a minimum of 120 in. [3 m] of clearance from pool water.

TABLE 3: Installation Required Clearances

Heater Panel	Outdoor Clearance
Top	20
Front (control)	98
Back (coil)	12
Rest of Perimeter	30

FIGURE 3: Outdoor Minimum Clearances

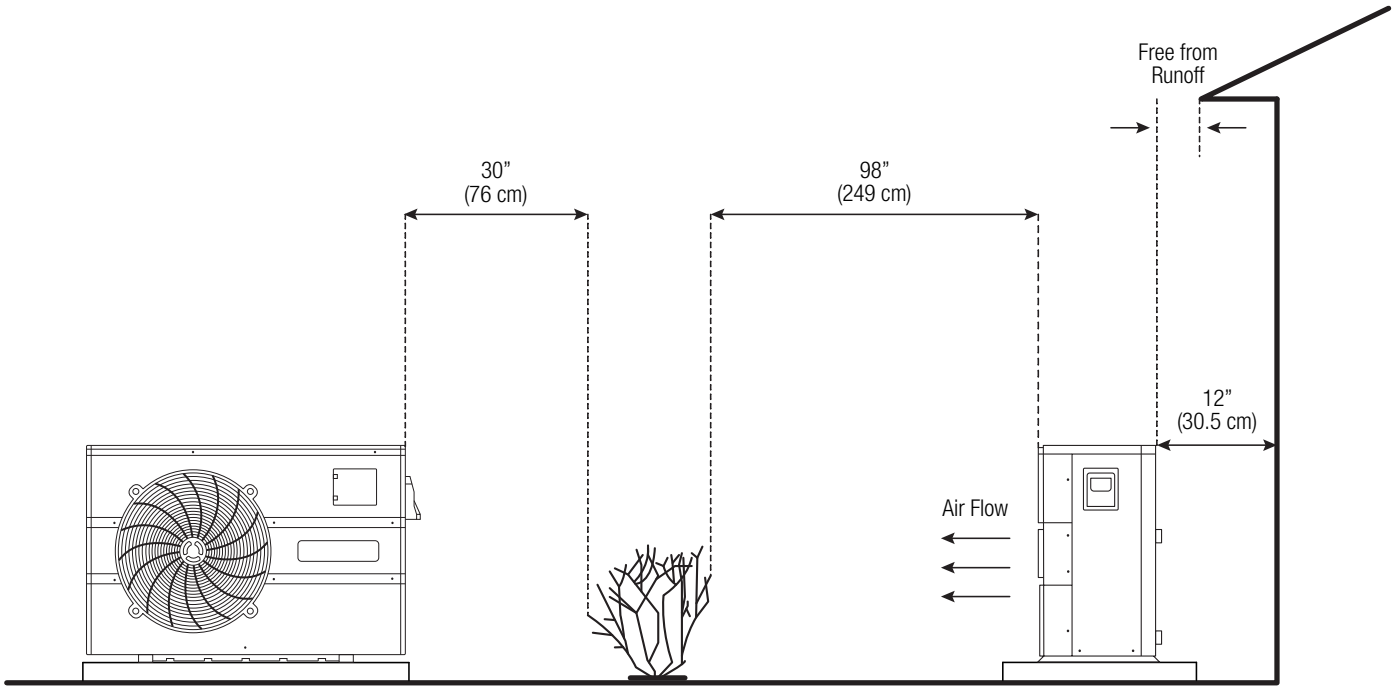

EQUIPMENT PAD: Place the heat pump on a level surface such as concrete or a fabricated slab (pad). This allows proper drainage of condensation and rainwater from the base of the unit. If possible, the pad should be placed at the same level or slightly higher than the filter system equipment pad.

FLOORING: This heater may be installed on either non-combustible flooring or combustible flooring that does not reduce the bottom clearance of the heater. Ultralite™ or equivalent concrete-over-foam HVAC pads are acceptable.

USE ONLY HAYWARD GENUINE REPLACEMENT PARTS

DRAINAGE AND CONDENSATION: Condensation will be produced by the evaporator coil when the unit is heating water and drain at a steady rate, usually three to five gallons per hour, depending upon ambient air temperature and humidity. The more humid the conditions, the more condensation will be produced. Use the supplied condensate drain to route the condensate away from the unit and dispose appropriately. It is easy to mistake the condensation for a water leak inside the unit. A way to verify that the water is condensation is to shut off the unit and keep the pool pump running. If the water stops running out of the base pan, it is condensation collecting around the unit. A quicker way is to check the water for CHLORINE. If there is no chlorine present in the water around the unit, then it's condensation.

ANCHORING: The heater is equipped for installation of anchoring screws when required by local codes. Follow all relevant Local, State and National requirements regarding wind load anchoring. When anchoring is required to secure the heat pump to concrete pad, use the specified hardware shown in FIGURE 4.

To complete the installation use the following:

Concrete tapping screws	(FIELD SUPPLIED; Tapcons® stainless steel, qty (8), size to be ¼in diameter with a minimum length of 1-1/2in)
Fender washers	(FIELD SUPPLIED; stainless steel, qty (4), size to be 1-1/2in)

FIGURE 4: Equipment Pad and Anchoring

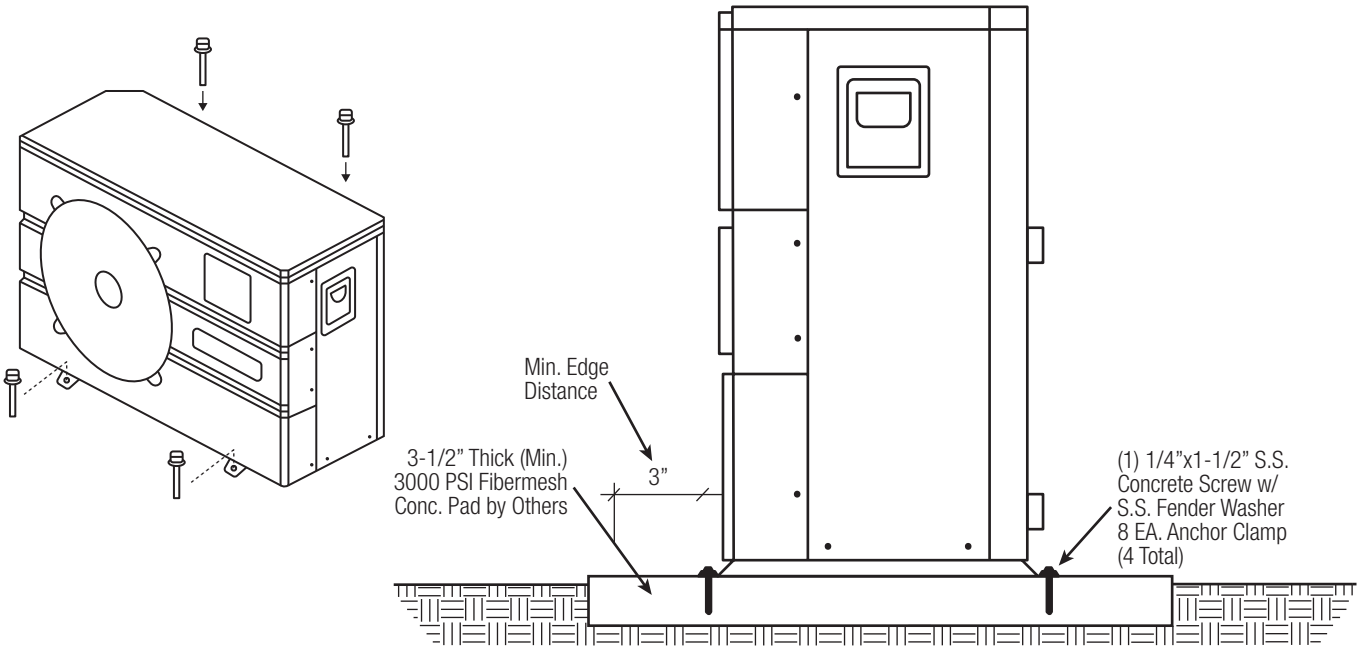

WATER PIPING

GENERAL: The heater is for use with pool and spa/hot tub water furnished by municipal water distribution systems only. The use of mineral water, seawater (PPM>5000), or other non-potable waters will invalidate the warranty. These heat pumps are designed for nominal water flows through the condenser. See specifications for minimum and maximum flow requirements to ensure sufficient heat removal and water erosion of heat exchanger tubing. The minimum flow rate is to be calculated or measured with the in-floor cleaning system in use, if the pool is so equipped, as well as any other jets or other demands on the water flow. Flow rates above specified maximum will create excessive pressure drop through the condenser and require unnecessarily high pumping energy. Bypass valve setting may be accomplished by temporarily installing a flow meter on the outlet line of the heater. Then adjust the manual bypass valve until the flowrate through the heater is within the flow rate range specified. Once the manual bypass valve is set, note the position and remove the valve handle to prevent accidental adjustment. Failure to install an External Bypass Assembly with flow rates above the specified maximum will void the warranty. Do not install any restriction in the water pipe between the heater outlet and the pool with the exception of; three-way switching valve, in-line chlorinator and/or chlorinator check valve as shown in figure5 below.

AUTOMATIC CHLORINATORS AND CHEMICAL FEEDERS: If used, a chlorinator must be installed downstream from the heater in the pool return line and at a lower elevation than the heater as shown in Figure5. Install a separate positive seal corrosion resistant check valve between the heater outlet and the chlorinator to prevent highly concentrated sanitizer from back siphoning into the heater. Back siphoning may occur when the pump is shut off and a pressure differential is created.

USE ONLY HAYWARD GENUINE REPLACEMENT PARTS

FIGURE 5: Pad Plumbing Layout

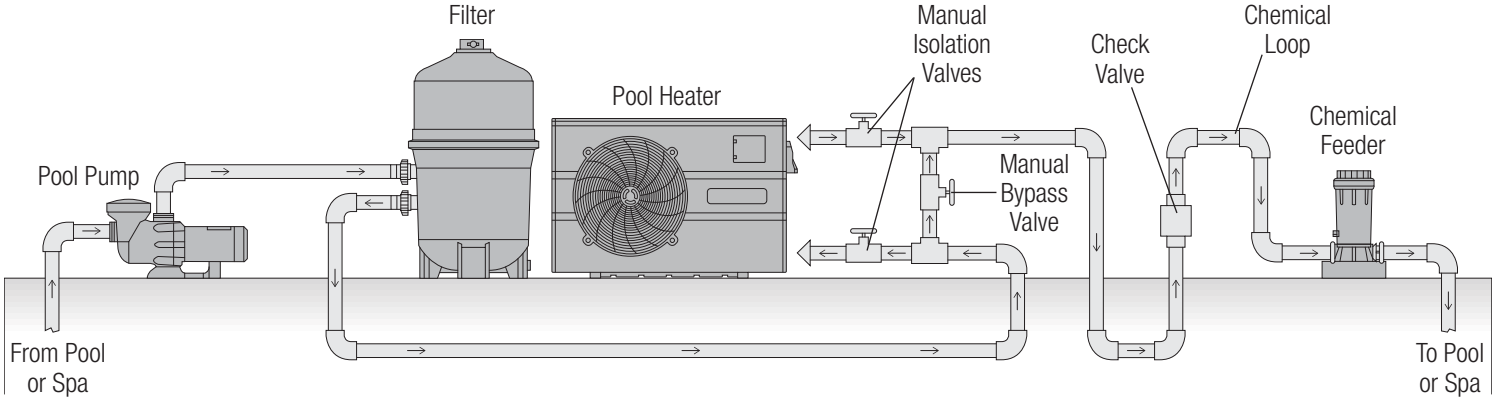

CAUTION - Improperly adjusted manual bypass valves will result in damage to the heater if the flow rates are not maintained under all operating conditions as specified in listed SPECIFICATION. The heat exchanger will fail and this damage will not be covered under the manufacturer's warranty.

CAUTION - The heat pump must be protected from back siphoning of water. If there is any chance of back siphoning, provide a check valve between the pool and the filter pump inlet. Failure to follow the instructions may result in property damage due to flooding.

CAUTION - Automatic erosion type chlorinators, if used, must be installed downstream (between the heat pump and the pool) of the heat pump, and a check valve (or Hartford Loop) installed in a manner that will not allow the raw chlorine to drain back to the heat pump when the water pump is off. Failure to follow the instructions may result in property damage.

CAUTION - Do not pour chemicals directly into the skimmer. It could result in damage to your system and heat pump.

NOTICE - Be advised, that when pool equipment is located below the pool surface, a leak at this lower level can result in large-scale water loss or flooding. Manufacturer is not responsible for water loss or damage it causes.

UNIONS: The heater is equipped with two detachable union connectors, (2 union nuts and 2 gaskets) included with the heat pump. These fittings must be installed on the heat pump water inlet and outlet to facilitate servicing and winterizing the unit. (See FIGURE 6). Heat sinks, heat tapes, firemen switches, and check valves are not required on the heater. However, if there is any chance of "back-siphoning" of hot water when the pump stops running, it is suggested that a check valve be used on the heater outlet pipe down stream of bypass system.

FIGURE 6: In Ground Included Union Connectors

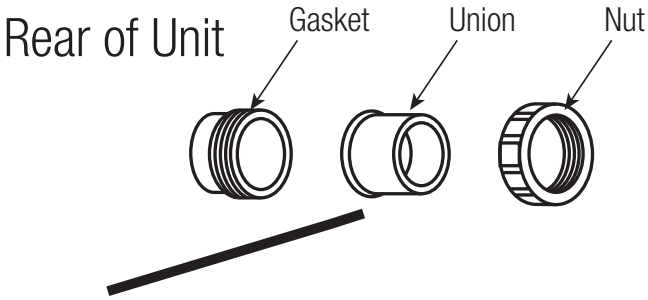

USE ONLY HAYWARD GENUINE REPLACEMENT PARTS

INSTALLATION ABOVE POOL/SPA SURFACE

If the heater is installed more than three (3) feet above the surface of the pool/spa water, install a loop as shown in FIGURE 7 to prevent drainage of water in the heater during a filter change.

TYPICAL POOL ARRANGEMENT:

FIGURE 8 illustrates a typical pool piping diagram and layout for the pool equipment. Also shown is implementation of an optional Gas or Solar heater system for additional capacity. Other pool heaters, such as gasfired or solar-powered devices must be installed in a parallel circuit and operated independently (only one at a time) for your warranty to be valid.

NOTICE - Because of the intense heat that can be generated by gas and solar units, isolating it with a shut-off valve and a check valve when gas or solar heater is in operation protects the heat pump. Failure to follow the instructions may result in property damage.

Notes:

1. Isolate the heat pump from hot water flow of heating devices such as gas or solar heater.
2. Install bypass loop for heat pump unit.

FIGURE 9 illustrates a multiple heater installation for very large pools with and without a manual bypass valve.

1. Maintain 4-6ft [1,2-1,8 m] clearance between the units, 2ft [0,6 m] around perimeter, and at least 6ft [1,8 m] over them. Refer to LOCATING THE HEATER section for more details.
2. Install bypass loops for each unit.
3. Install union style fittings from the heat pump CONSUMER KIT adjacent to the unit to facilitate easy service procedures.

Electrical Connections

GENERAL INFORMATION: An external supply of power is required to operate the pool heater system. Review SPECIFICATIONS for this heater in the GETTING STARTED section to properly size field power connections. All wiring connections to the heater must be made in accordance with the latest edition of the National Electrical Code ANSI/NFPA 70, unless local code requirements specify otherwise. In Canada, follow CSA C22.1 Canadian Electrical Code, Part 1. The heater must be electrically grounded and bonded in accordance with local codes or, in the absence of local codes, with National Electrical Code, ANSI/NFPA 70. Wiring connections must be made as shown in the wiring diagram found inside the heater cabinet, and a copy is provided for convenience in the GETTING STARTED section at the beginning of the manual. The heater must also have an independent ground and bond connections. There is a ground lug inside the control box adjacent to the power connections and a bonding lug on the side of the heater. Use a solid copper conductor, size 8 or larger. Run a continuous wire from external bonding lug to reinforcing rod or mesh. Connect a No. 8 AWG (8.4 mm2) solid copper bonding wire to the grounding lug provided on the heat pump and to all metal parts of swimming pool or spa, and to all electrical equipment, metal piping (except gas piping), and conduit within 5 ft. (1.5 m) of inside walls of swimming pool or spa. IMPORTANT - Reference NEC codes for all wiring standards including, but not limited to, grounding, bonding and other general wiring procedures.

FIGURE 7: Heater Installation Above Pool

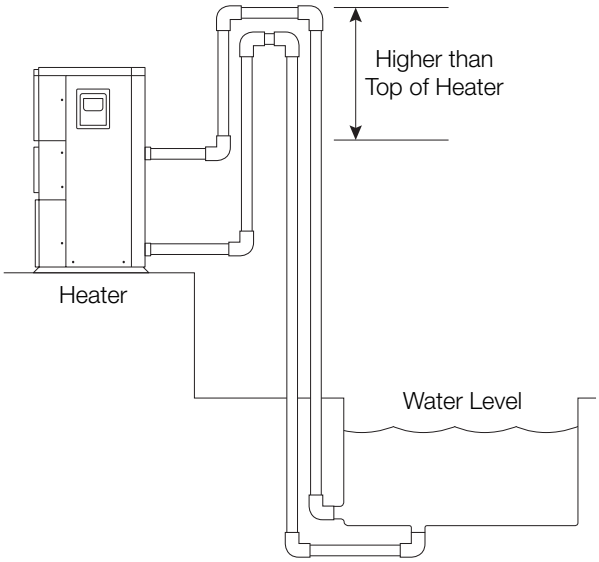

FIGURE 8: Typical Plumbing to Pool

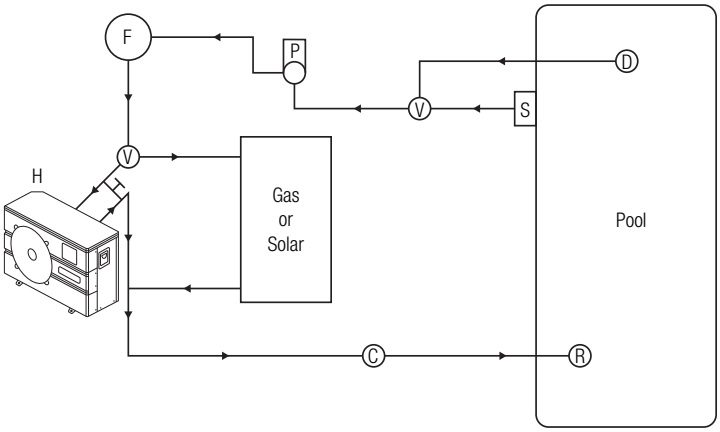

FIGURE 9: Multiple Heater System

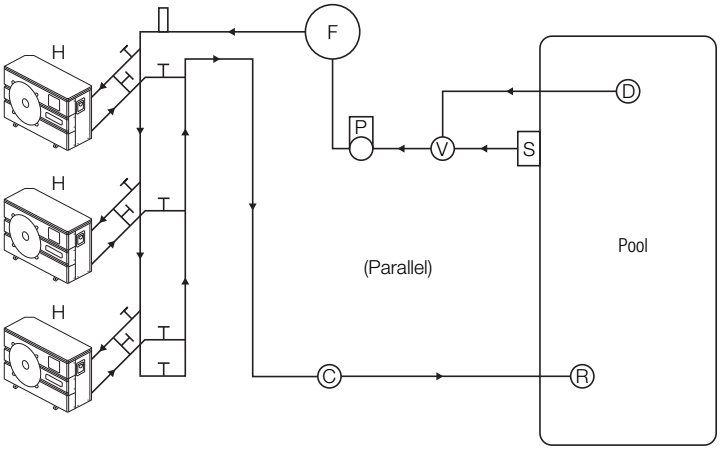

USE ONLY HAYWARD GENUINE REPLACEMENT PARTS

WARNING - Risk of Electric Shock. Review all safety information provided in the GETTING STARTED section of this manual prior to servicing. Always disconnect power circuit before connecting the heat pump, or working on the heat pump. This equipment contains wiring that carries high voltage. Contact with these wires could result in death or personal injury and/or may also cause property damage.

WARNING - All electrical wiring MUST be in conformance with all applicable local codes, regulations and the National Electric Code (NEC), in particular NEC Article 680: Swimming Pools, Fountains & Similar Installations and Article 440: Air-Conditioning & Refrigeration Equipment.

NOTICE - When GFCI breakers are required by installation codes, product will operate satisfactorily when using a Siemens QF250A GFCI breaker. This GFCI breaker has been tested and found to not nuisance trip. GFCI nuisance trips are not covered under warranty.

NOTICE - If voltage drops below 208V, this may damage the heat pump and void the warranty. Take proper steps to ensure correct voltage at the heat pump during operation

ELECTRICAL CONNECTIONS: Turn OFF source power to the heat pump before working on electrical connections. Any unused openings must be plugged and all wiring secured for proper strain relief. The power connections are to be made on the contactor terminals located in the control box (see FIGURE 11 Power Connections).

FIGURE 11: Power Connections

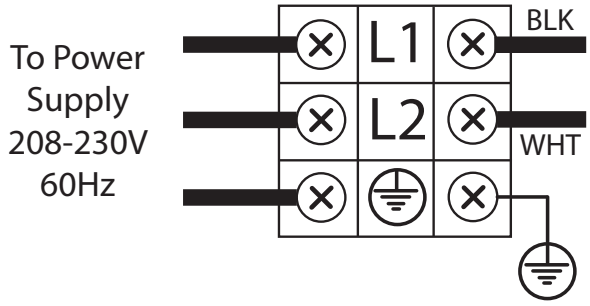

REMOTE CONTROL CONNECTION: The heater is equipped for remote control via an independent 2-wire connection. (See Figure12 for remote in connection). The unit is factory shipped with the jumper in place. The jumper can be replaced with a remote switch to activate the unit. It is recommended the unit be placed in Auto mode if only a remote switch closure is used. Temperature is set at the unit controller.

If the unit is controlled with remote on/off connection with remote temperature control;

For heating, set mode to Heat set thermostat to 104°F
For cooling, set mode to Cool set thermostat to 65°F.
The remote on/off can then activate the unit as needed for remote temperature control.

FIGURE 12: Remote Control

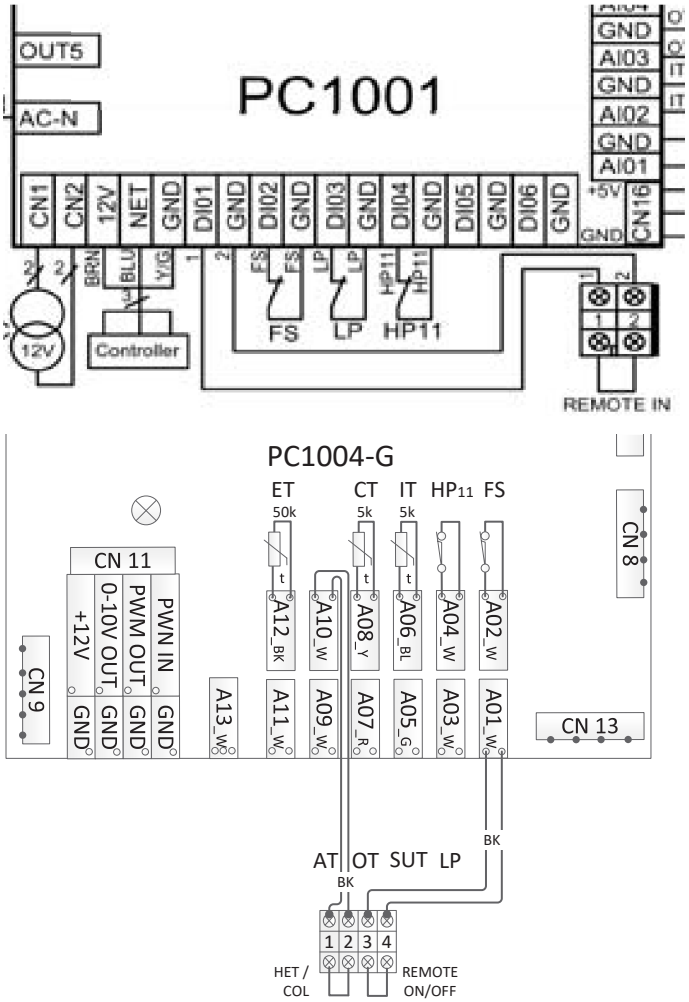

NOTICE - Pump must be running for unit to operate with remote control connection.

All remote wiring must be run in a conduit separate from incoming power. Use 22 AWG wire for runs less than 30 feet. Use 20 AWG wire for runs over 30 feet. The maximum allowable run is 200 feet.

USE ONLY HAYWARD GENUINE REPLACEMENT PARTS

Hayward Omni Connectivity (HP70HA2 Only)

The HP70HA2 is a Smart Heater that can be fully controlled by a Hayward Omni pool automation control. These internet enabled controls allow you to remotely create schedules and set points for both heating and cooling while displaying real time heater status and diagnostics. The Omni family of products provide a cable connection used to communicate with the HP70HA2 and requires firmware revision R4.3.0 or later. Refer to your Omni Operation manual to the determine current firmware revision as well as instructions on how to upgrade.

Disconnect power to both the heat pump and the OmniLogic before removing their panels. Use a proper outdoor rated 3 conductor 22 AWG cable (20 AWG for runs over 30 ft) for the connection from the Omni control to the HP70HA2. Route the cable through appropriate knockouts making sure they are not shared with high voltage wiring. Refer to the diagram below showing a Hayward OmniLogic control wired to the heat pump. Note that the position of each colored conductor is the same at both ends of the communication cable. Use this same wiring method regardless of which Omni control model used. After the communication cable is fastened and secure, refasten the panels.

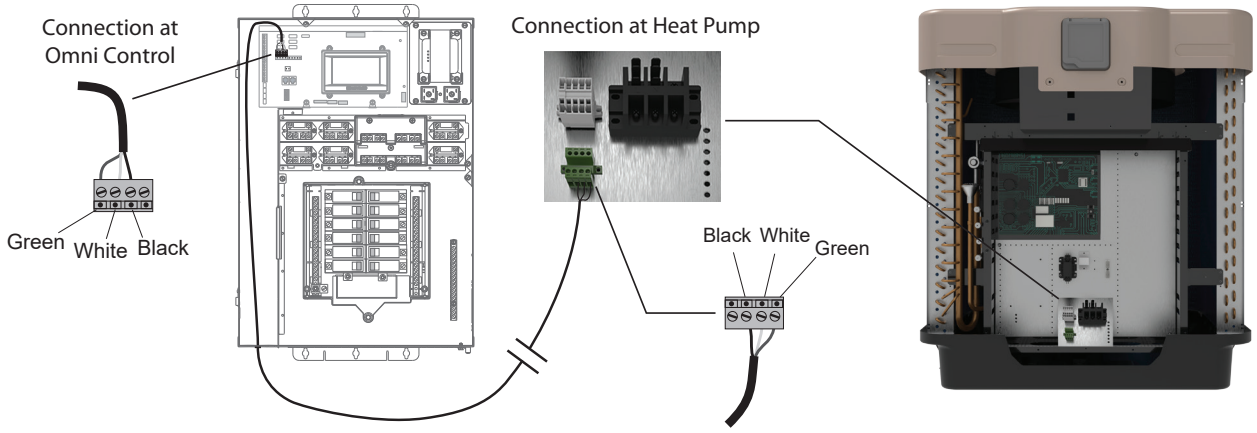

Omni Configuration and Operation

After wiring is complete, power must be applied to the HP70HA2 for it to be discovered by the Omni control. To add the new heater to your Omni control's configuration, use the Configuration Wizard for new installations and Quick Edit for existing installations. Progress through the configuration screens until you get to the Heater section as described in your Omni control's installation manual. Answer "Yes" to the question "Do you want to add a Smart Heater?". Progress through the following screens until the heater is configured.

Enable / Disable - Slide this switch to enable or disable heating/cooling. The setting will not take effect until the Save button is touched. To turn on the heater/chiller, adjust the set point higher or lower than the actual pool water temperature and then Save. When the circle icon is grayed out and stationary, equipment is currently idle. When in motion, the heater/chiller is actively heating/cooling.

Change Set Point - This slider will raise and lower the heater/chiller set point setting. The slider will change the Main set point and the slider will change the Solar set point (if used).

Set Point Temperature - The Main heater/chiller and Solar set point temperatures are shown in the boxes. The set-points can be changed using the sliders at the bottom or by pressing the box and setting the temperature manually.

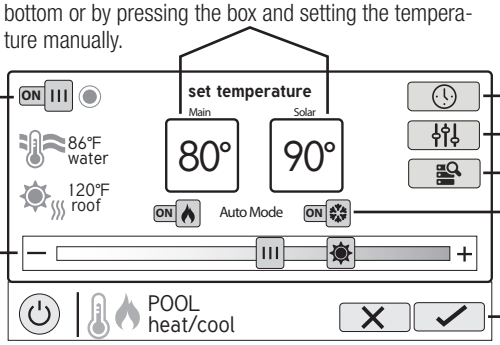

Set Schedule - Touch this button to set a schedule for the heater/chiller.

Priority & Settings - If more than one heater/chiller is configured for the pool or spa, use this button to set priority, change differential and enable/disable physical heaters/chillers.

Heater Diagnostics - Press this button to view heater diagnostics.

Heater/Cooling Mode - Press these buttons to change the heating/cooling mode. Turn both ON to enable "Auto Mode".

Save Changes - Settings are not saved until this button is pushed.

Heat Mode - Heat Mode is enabled if the Heating on/off switch is ON and the Cooling on/off switch is OFF. In Heat Mode, the equipment will ONLY turn on to heat the pool/spa water.

Cool Mode - Cool Mode is enabled if the Cooling on/off switch is ON and the Heating on/off switch is OFF. In Cool Mode, the equipment will ONLY turn on to cool the pool/spa water.

Auto Mode - Auto Mode is enabled if the Heating on/off switch and the Cooling on/off switch are both ON. In Auto Mode, the equipment will turn on to heat the pool/spa water when the pool/spa water temperature is too low, AND to cool the pool/spa water when the pool/spa water temperature is too high. Auto Mode will turn on the heater/chiller according to the set initial temperature differential. The default initial temperature differential is set to 2°F.

USE ONLY HAYWARD GENUINE REPLACEMENT PARTS

CHECK-OUT & START-UP

GENERAL: After completing the installation connections to the pool heater, follow the procedures outlined below to ensure that the pool heater is functioning properly. Before proceeding, MAKE CERTAIN there are no water leaks in any plumbing connections or piping and water flow is within the proper flow rate ranges. The heater is equipped with a control system that automatically monitors the water temperature set points and safety devices. As water conditioning is needed, it turns on the compressor to start the appropriate transfer of heat to the water. FIGURE 13 provides a summary of heater components and their locations in the system. Check that the pump is operating and the system is filled with water prior to starting the heater.

FIGURE 13: Location of Components (heating operation flow shown)

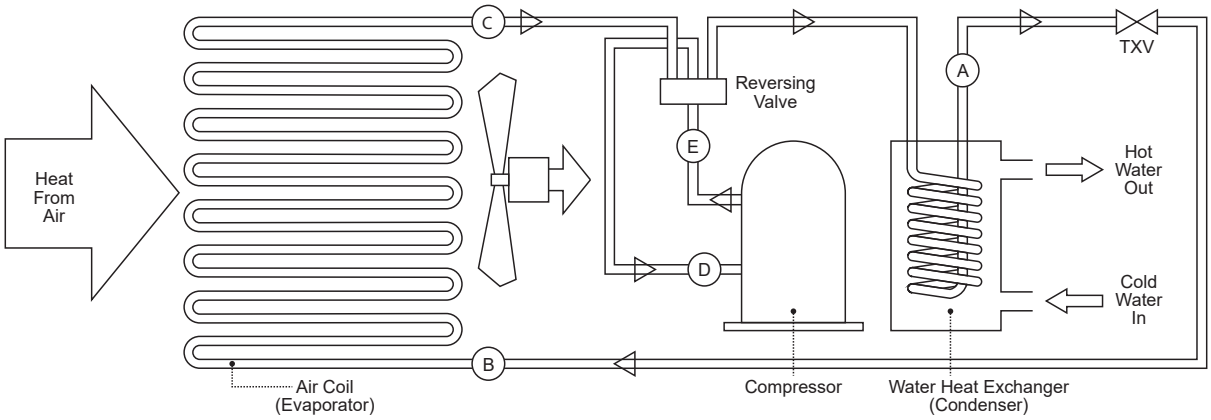

The heat pump takes heat from the environment and uses it to heat the pool water. During heat pump operation, high temperature, high-pressure sub cooled liquid Refrigerant (A) is throttled by Metering Device (TXV) and turned into low temperature, low-pressure saturated liquid (B). The two-phase Refrigerant flows through the Air Coil (Evaporator), where the liquid refrigerant evaporates into vapor by absorbing heat from the surrounding air. At the outlet of the Air Coil (Evaporator) it becomes a low temperature, low- pressure superheated vapor (C). The Compressor receives this flow at the suction line (D), and compresses it into a high temperature, high pressure superheated vapor, which is discharged from the Compressor (E) and flows through the reversing valve into the Water Heat Exchanger (Condenser). The heat carried by the flow is then released to the pool water. At the same time, the high temperature, high-pressure superheated vapor is then condensed back to high-pressure sub cooled liquid (A), which completes the cycle. The water, which is being forced through the Water Heat Exchanger (Condenser) by the pool pump, is thus heated as it passes through.

HEAT PUMP PROTECTION FEATURES: These heat pumps are equipped with safeguards that will stop heater operation to protect the unit in case of the following events:

- Excessively high refrigerant pressure
- Excessively high water temperature
- Loss of refrigerant
- Evaporator Freeze-up
- Low Ambient Temperature

Interface Overview

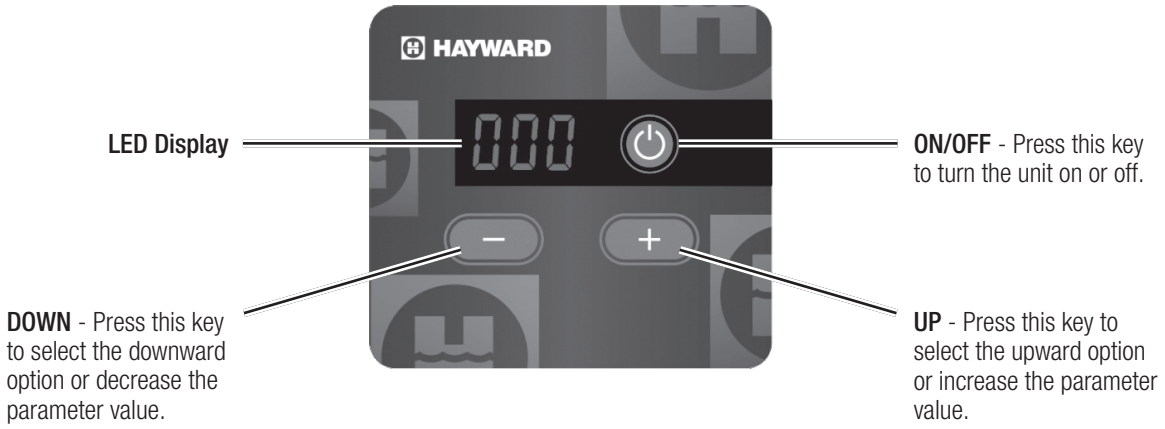

USE ONLY HAYWARD GENUINE REPLACEMENT PARTS

Heater On/Off

When the unit is off, press the ON/OFF key and hold on for 0.5 seconds to turn on the unit; When the unit is on, press the ON/OFF key and hold on for 0.5 seconds to turn off the unit.

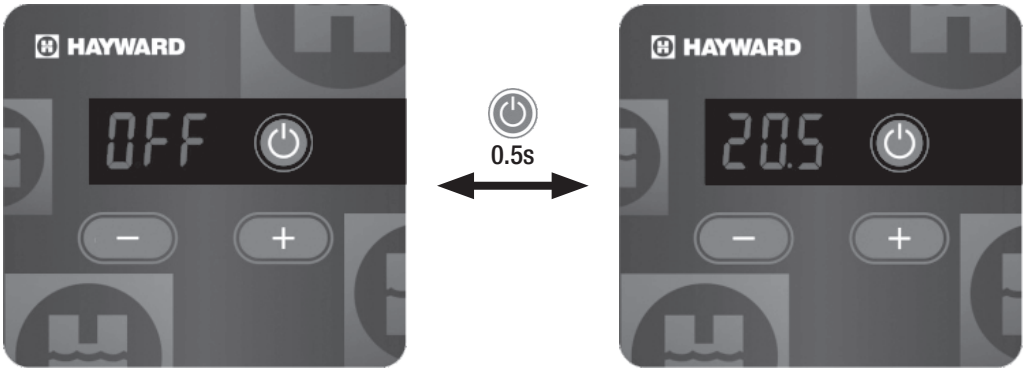

Heater Off - Main Interface

Heater On - Main Interface
(Actual water temp. displayed)

Setting Temperature

With the heater on, press the UP or DOWN key until the current mode target temperature flashes, then press the UP key to increase the temperature value, or press the DOWN key to decrease it. After 5 seconds of no operation, the unit will save the target temperature setting. Pressing the ON/OFF key will NOT save the target temperature setting, but will return to the main interface.

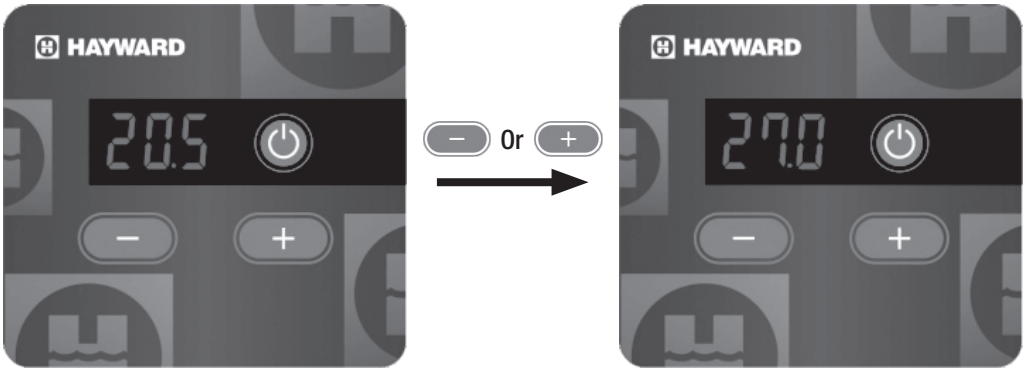

Heater On - Main Interface
(Actual water temp. displayed)

Target Temperature Interface

Temperature Units: To switch between °F and °C, press and hold the ON/OFF and DOWN keys for 5 seconds.

Target Temperature Increments: Pressing the UP or DOWN key for less than 2 seconds will change the target temperature by increments of 0.1°F/°C. Pressing and holding the UP or DOWN key for longer than 2 seconds will change the target temperature by increments of 1°F/°C.

USE ONLY HAYWARD GENUINE REPLACEMENT PARTS

Change Heating/Cooling Mode

With the heater on, press and hold the UP and DOWN keys for 0.5 seconds to set the mode. Press the UP or DOWN button to switch between heating (h), cooling (C) and auto mode (A). After 5 seconds of no operation, the unit will save the selected mode. Pressing the ON/OFF key will NOT save the selected mode, but will return to the main interface.

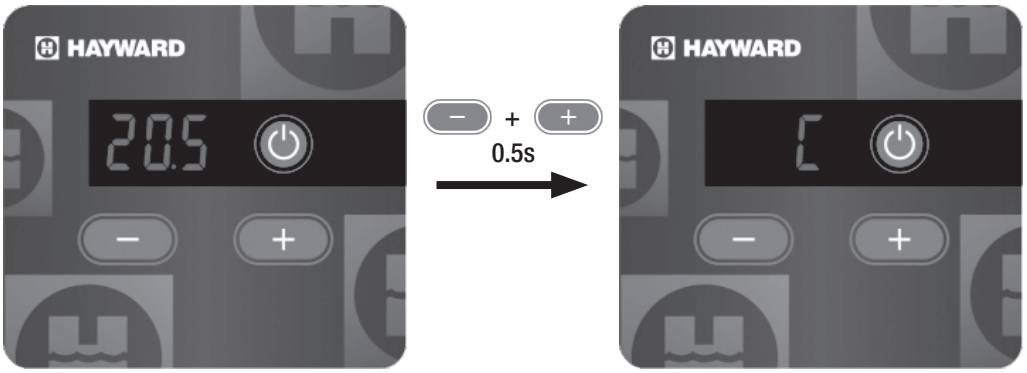

Heater On - Main Interface

Mode Change Interface
Heating: h
Cooling: C
Auto: A

Heating Mode: The unit will turn on whenever the actual water temperature drops below the target temperature.
Cooling Mode: The unit will turn on whenever the actual water temperature rises above the target temperature.
Auto Mode: The unit will turn on whenever the actual water temperature drops below OR rises above the target temperature.

Interface Lock

To avoid user errors, the interface can be locked after changing settings. From the main interface, press the ON/OFF key for 5 seconds until the controller buzzes. The interface is now locked. Repeat this operation to unlock the interface. NOTE: when the unit is displaying an error code, the interface lock will automatically be removed.

Display Outlet Water Temperature

With the heater on, press the UP key for 2 seconds. The controller will buzz and the interface will flicker, indicating that the outlet water temperature is displayed. After 10 seconds of no operation or pressing the the ON/OFF key, the unit will return to the main interface.

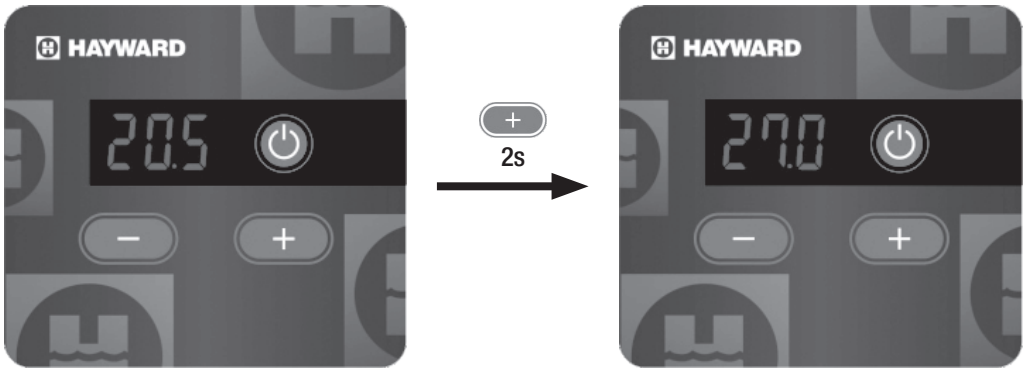

Heater On - Main Interface

Outlet Temperature Display (flickering)

USE ONLY HAYWARD GENUINE REPLACEMENT PARTS

Mute Mode

From the main interface, press the DOWN key for 5 seconds to toggle mute mode. Use the UP and DOWN keys to switch between OFF (mute deactivated) and ON (mute activated). After 5 seconds of no operation, the unit will save the selected mute mode. Pressing the ON/OFF key will NOT save the selected mute mode, but will return to the main interface.

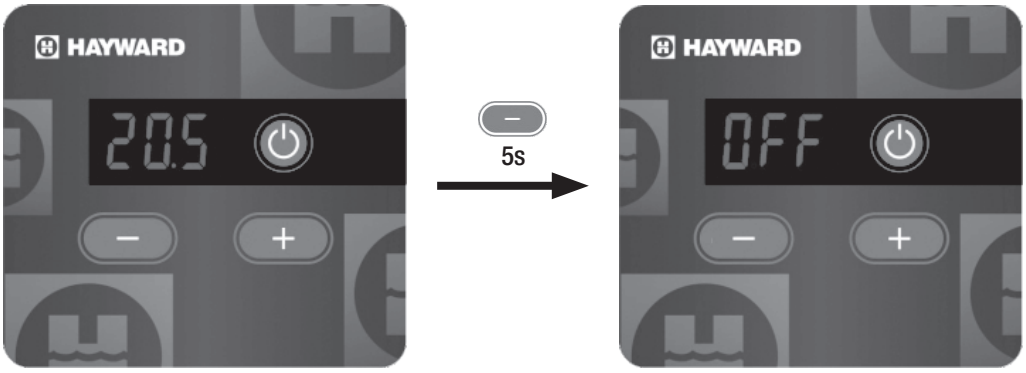

Heater On - Main Interface

Mute Mode Change Interface
OFF: Mute Deactivated
ON: Mute Activated

Bypass Operation (HP70HA2 Only)

The heat pump may be controlled by a remote thermostat. Disconnect power to the heat pump before removing any panels. Use a proper outdoor rated 22 AWG cable (20 AWG for runs over 30 ft) for the connection from the thermostat to the heat pump. Route the cable through appropriate knockouts making sure they are not shared with high voltage wiring. Connect the thermostat cable to the “Remote On/Off” terminal. After the thermostat cable is fastened and secure, refasten the panels. Follow the steps below to enable bypass operation.

1. From the main interface, press and hold the UP and DOWN keys for 10 seconds to enter the password setting interface.

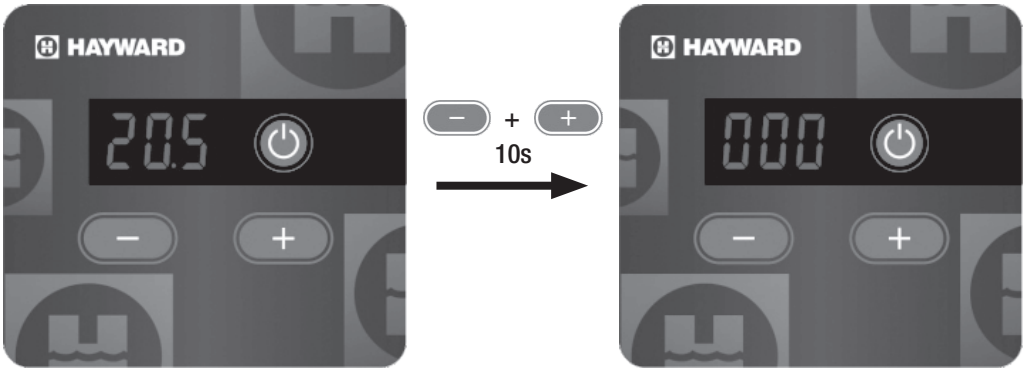

Heater On - Main Interface

Password Setting Interface

USE ONLY HAYWARD GENUINE REPLACEMENT PARTS

2. Use the UP and DOWN keys to set the password to “022”. Wait 2 seconds for the password to save and enter the user setting interface.

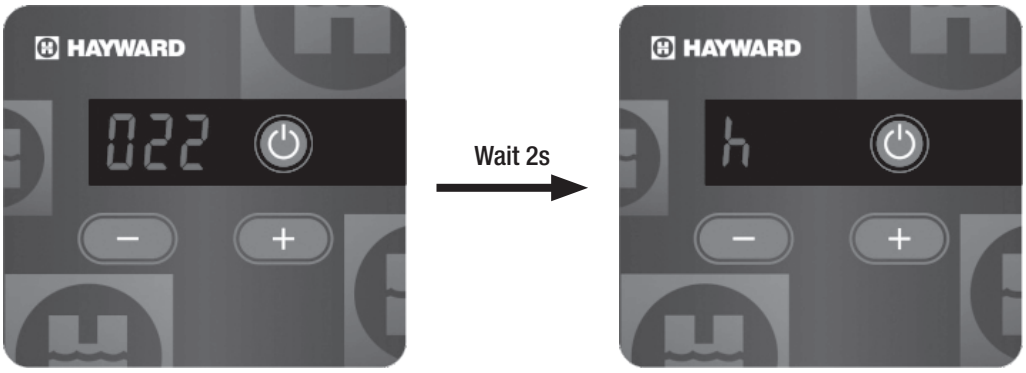

Password Setting Interface
(Password “022” entered)

User Setting Interface

3. Use the UP and DOWN keys to select the parameter “b”. Press and hold the UP and DOWN keys for 1 second to enter the bypass operation setting interface.

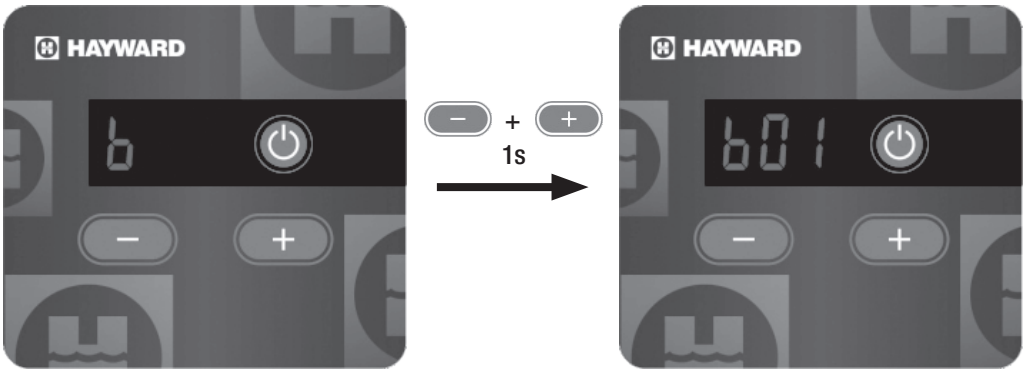

User Setting Interface
(Parameter “b” selected)

Bypass Operation Setting Interface

4. Use the UP and DOWN keys to select bypass operation mode “0” (bypass operation disabled) or “1” (bypass operation enabled). Once the desired mode is selected, wait 2 seconds for the selection to be saved. NOTE: when bypass operation is enabled, the main interface will display “bo” and no heater operation will occur until bypass operation is disabled. Parameter settings can still be changed.

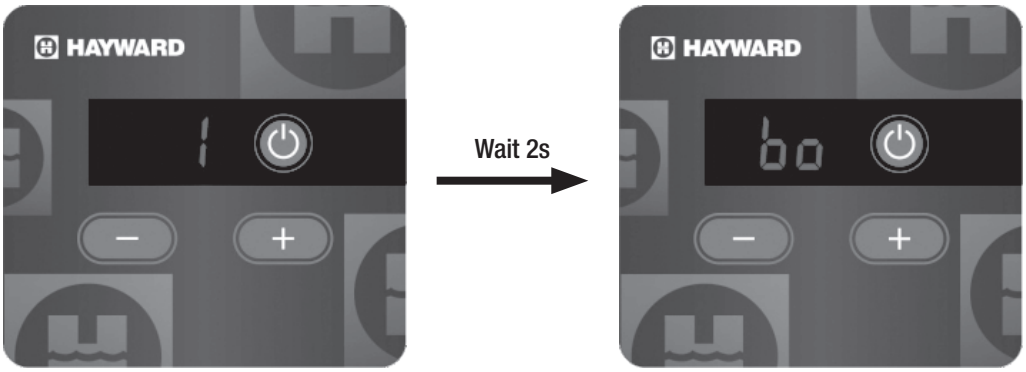

Bypass Operation Setting Interface
0: Bypass Operation Disabled
1: Bypass Operation Enabled

Main Interface - Bypass Operation

Omni Control (HP70HA2 Only)

After the Omni system is successfully connected, “rC” is displayed on the heater interface and no manual operations can be performed. When the Omni system is disconnected, the heater will return to manual control. NOTE: If a fault occurs, the error code will be displayed on the heater interface and no operations can be performed. If the fault is cleared, the heater interface will return to the “rC” display.

Remote Control Interface
(Only displayed when connected
to an Omni Control system)

USE ONLY HAYWARD GENUINE REPLACEMENT PARTS

Clock & Timer Settings

1. From the main interface, press and hold the UP and DOWN keys for 10 seconds to enter the password setting interface.
2. Use the UP and DOWN keys to set the password to “066”.
3. Wait 2 seconds for the password to save and enter the factory setting interface.
4. Use the UP and DOWN keys to select the paramater “v” in the factory setting interface.
5. Press and hold the UP and DOWN keys for 1 second to enter the clock setting interface as shown below.

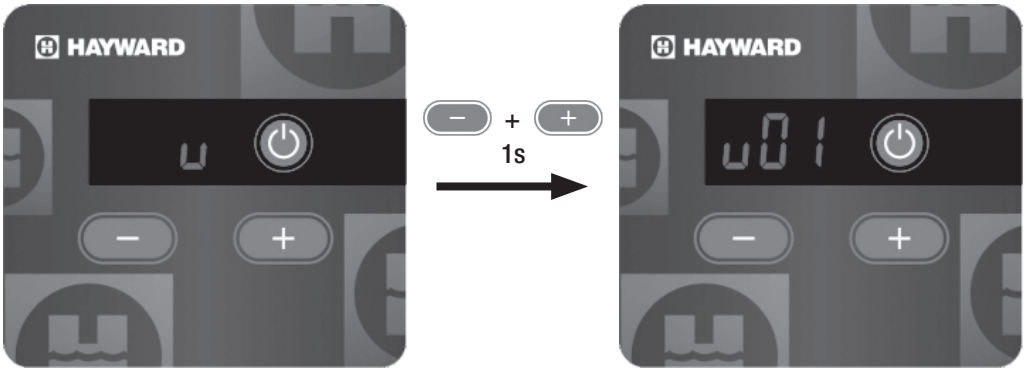

Clock Setting Interface

Clock Setting Interface - Hour Digit
(Refer to the table below for all clock and timer settings)

6. Use the UP and DOWN keys to select the desired clock or timer setting that you would like to adjust. Refer to the table below.

Display	Setting	Setting Values
v01	System Time - Hour Digit	Select hour: 01 - 12
v02	System Time - Minute Digit	Select minute: 00 - 59
v03	Timer ON - Hour Digit	Select hour: 01 - 12
v04	Timer ON - Minute Digit	Select minute: 00 - 59
v05	Timer OFF - Hour Digit	Select hour: 01 - 12
v06	Timer OFF - Minute Digit	Select minute: 00 - 59
v07	Timer ON Setting	“1” Represents saving Timer ON setting “0” Represents cancelling Timer ON setting
v08	Timer OFF Setting	“1” Represents saving Timer OFF setting “0” Represents cancelling Timer OFF setting

7. Once you find the clock or timer setting, press and hold the UP and DOWN keys for 1 second to change that setting’s values.
8. After changing the setting values, wait 5 seconds for the unit to save the settings and return to the clock setting interface.
9. Use the UP and DOWN keys to select the next clock or timer setting that you would like to adjust until you are finished.

Controller Interface Diagram and Definition

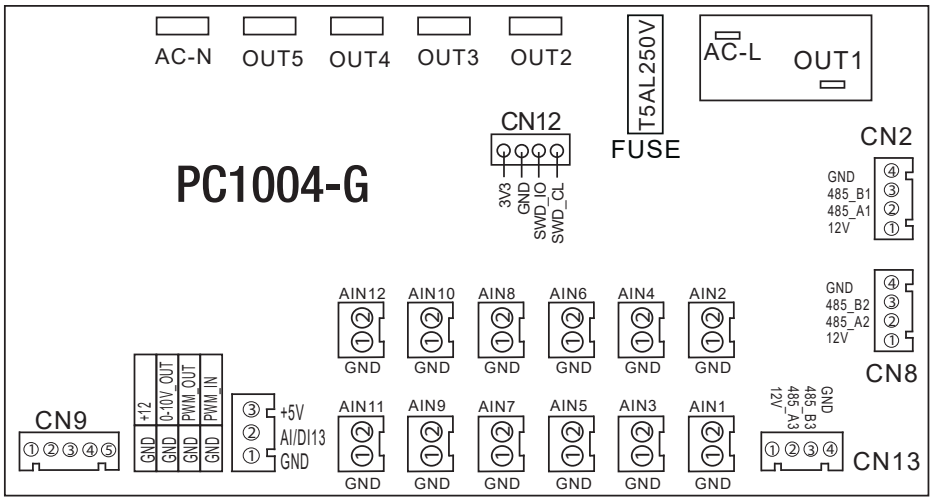

Sign	Meaning	Sign	Meaning
OUT1	Compressor (output 220-230VAC)	AI/DIO9	Ambient temperature (input)
OUT2	Circulating water pump(output 220-230VAC)	AI/DIO10	Mode switch/Coil 2 temperature (input)
OUT3	4-way valve (output 220-230VAC)	AI/DIO11	Master-slave switch/Antifreeze temperature (input)
OUT4	High speed of fan (output 220-230VAC)	AI/DIO12	System exhaust temperature (input)
OUT5	Low speed of fan (output 220-230VAC)	AI/DIO13	Compressor current detection/Pressure sensor(input)
AC-L	Live wire (input 220-230VAC)	PWM_IN	Master-slave switch/Feedback signal of EC fan (input)
AC-N	Neutral wire (input 220-230VAC)	PWM_OUT	AC fan control (output)
AI/DIO1	Emergency switch (input)	0_10V_OUT	EC fan control (output)
AI/DIO2	Water flow switch (input)	+5V	Reserved (output)
AI/DIO3	System low pressure (input)	+12V	Reserved (output)
AI/DIO4	System high pressure (input)	CN2	Inventer board communication port
AI/DIO5	System suction temperature (input)	CN8	WIFI/ Color line controller communication port/DC fan speed regulation module
AI/DIO6	Water input temperature (input)	CN9	Electronic expansion valve
AI/DIO7	Water output temperature (input)	CN12	Program port
AI/DIO8	Coil 1 temperature (input)	CN13	Centralized control communication port

Wire Control Interface Definition

Sign	Meaning
B	485B
A	485A
V	12V (power +)
NET	Communication signal
G	GND (power -)

USE ONLY HAYWARD GENUINE REPLACEMENT PARTS

Two-Speed Pump

In a few cases the flow from a two-speed pump is below the minimum required to operate the water flow switch on the heater. In these cases the pump must be run at high speed to operate the heater. If the pump and piping arrangement are such that the required minimum flow cannot be obtained, do not attempt to operate the heater. Correct the installation.

NOTICE - Heater installation, checkout, and start-up should now be completed. BE SURE to leave this manual with the pool owner.

Maintenance & Service

PERIODIC INSPECTION: The heater is designed and built for long performance life when installed and operated according to the manufacturer's directions. Regular inspection by qualified service personnel is recommended to keep the heater working properly. The following inspection points are suggested to help maximize heater life.

1. Periodically check the fan discharge area. The fan discharge must never be obstructed in any way and minimum clearances must be observed. Remember that shrubs grow and in time may obstruct
2. Keep the entire pool heater area clean and free of all debris, corrosive materials, and other flammable vapors and liquids. Remove any leaves or paper from around the heater.
3. Do not store chlorine, other pool chemicals, or other corrosives in the vicinity of the heater.
4. Do not use the heater if any part has been under water. Contact a qualified service technician to inspect the entire heater and replace any part of the control system that was under water. If heater has been totally submerged in water it must be removed and the entire heater must be replaced.
5. An inspection program is a good preventative maintenance measure. Keep this manual in a safe place for future reference for yourself as well as for a service technician to consult when inspecting or servicing the heater. Additional inspection procedures to be performed by a qualified service technician.

Water Chemistry

⚠ **WARNING** - **Water Chemistry.** Failure to maintain proper water chemistry may cause premature heat exchanger damage or failure.

The heat exchanger in your pool heater is made from the highest quality of materials. The titanium condenser is a premium material and the processes used to manufacture the heat exchanger are state of the art in pool heater design and manufacture. However, it remains vital that the heat exchanger be protected from damaging or corrosive chemicals, insufficient water flow or improperly balanced water chemistry. Heat exchanger damage or failure resulting from improper flow, improperly balanced pool water or the improper addition of sanitizer into the water is NOT covered under the terms of the warranty. The following factors are critical to heat exchanger protection. Follow these guidelines to help prevent pre-mature damage or failure to your heater and heat exchanger.

1. WATER FLOW THROUGH HEATER Water must be flowing through the heater at the minimum rated flow rate during operation. Check that the pump is operating and the system is filled with water and purged of all air prior to starting the heater. The minimum rated flow rates are listed in the specifications section.

TABLE 4: Water Chemistry

Chemical	Recommended Level	Effect of Low Levels	Effect of High Levels
Chlorine	1 - 3 ppm	hazy water, algae growth, bacteria causing infections	swimmer irritation, bleaching of clothes/hair, corrosive to heat exchanger
Bromine	2 - 4 ppm		
pH	7.4 - 7.6	corrosive to heat exchanger, swimmer irritation	cloudy water, scaling of heat exchanger, reduced sanitizer effectiveness
Total Alkalinity	80 -120 ppm	corrosive to heat exchanger, large fluctuations in pH	scaling of heat exchanger
Calcium Hardness	200 - 400 ppm	corrosive to heat exchanger	scaling of heat exchanger
Salt	2700 - 5000 ppm	poor salt chlorinator performance	corrosive to heat exchanger

2. WATER CHEMISTRY: The chemistry balance and mineral content of swimming pool and spa water changes rapidly due to the addition of sanitizing chemicals, user loads, exposed rain, runoff and the amount of sun - to name a few. Improper chemistry (See Table4) balance and mineral content can cause scaling and deposits to form on pool walls, in the filtration system, in the heat exchanger tubes and additionally can promote corrosive

action to all metals in the water path. Changing spa water regularly and maintaining the correct chemical balance in your pool/spa will keep the pool/spa safe and sanitary, and will help the heat exchanger longevity. Use a 4-way pool/spa water test kit to check your water frequently (at least weekly). Use the following guidelines to help maintain proper water chemistry:

3. SKIMMER CHLORINATION: Placing chlorine or bromine Tablets directly into the skimmer may result in high chemical concentrations flowing through the heater. DO NOT place chlorine or bromine Tablets in the skimmer.
4. CHLORINATOR INSTALLATION: Chlorinators must be installed downstream of the heater, and a check valve must be installed between the heater and chlorinator to prevent high chemical concentrations from back flowing into the heater. Make sure your piping arrangement meets the chlorinator installation requirement.
5. USE BYPASS: Until water chemistry is properly balanced, so that corrosive and potentially damaging water will not flow through the heater and therefore the heat exchanger. Close the bypass valve once the water is properly balanced.

⚠ **WARNING** - **Bypass.** Failure to close the bypass valve when attempting to operate the heater will result in extensive damage to the heat exchanger.

Ensure water flow through the heater is restored before operating the heater. A bypass feature is also advantageous for service needs and for the ability to remove the heater from the water path when not heating.

Winterization

In moderate climates, the heater can continue to operate during short-term cold spells. Do not use the heater to maintain the water temperature just above freezing or for freeze protection. Care must be taken to avoid freeze-up in the heater. When it is used during freezing weather, the pump must run continuously. The heater is not warranted against freeze-ups. In regions where freezing temperatures are encountered, all water must be drained from the heater when it is out of service, to prevent damage to the heater and piping. Draining the heat exchanger is recommended as part of the season's shutdown procedures.

NOTICE - A heater damaged by freezing is not covered under the manufactures warranty.

DRAINING THE HEAT EXCHANGER: This procedure applies to installations where the heater is located higher than the pool water level. If itis necessary to drain a pool heater located below the pool water level, you must either partially drain the pool, or isolate the pool heater from the pool using valves, then perform draining the heat exchanger.

1. Set the heater to OFF mode.
2. Turn the electricity to the heater OFF at the circuit breaker panel.
3. Be sure the circulating pump is OFF.
4. If no drain plug is provided, open lower inlet water union and allow all water to drain from the heater.
5. Re-install the drain plug or reattach the water union.

SPRING START-UP: This procedure should be performed annually to ready your heater for the upcoming season. In addition to the steps outlined below, it is recommended that a PERIODIC INSPECTION also be performed.

1. Inspect and clean the heater, being sure the heater is free of leaves and debris prior to startup.
2. Properly attached inlet and outlet piping and confirm the drain valve is closed.
3. Turn the filtration system pump ON and allow the system to run long enough to purge all the air from the lines.
4. Turn the electricity to the heater ON at the circuit breaker panel.
5. Set the heater to H mode and adjust the set point to the desired temperature setting.
6. If operating difficulties are encountered, contact a qualified service company for assistance.

Component Service

NOTICE - Only qualified service technicians, with appropriate test equipment, should be allowed to service the heater. For conditions where refrigerant must be managed, an EPA certified technician is required. All of the components that comprise the system have an effect on heater operation. Before proceeding with heater related troubleshooting tips, be certain that the pump is operating correctly, the filters and strainers are not blocked, the valves in the piping are properly positioned, and the time clocks are properly set.

⚠ **WARNING** - **Explosion Hazard.** Do not attempt to repair broken or faulty components of this heater. Do not modify the heater or its components in any manner. To do so may result in a malfunction that could result in death, personal injury, or property damage. Check with the pool owner to see if any part of the heater has been under water. Replace any electrically operated component that has been under water.

⚠ **WARNING** - **Risk of Electric Shock.** Review all safety information provided in the GETTING STARTED section of this manual prior to servicing. Always disconnect power circuit before connecting the heat pump, or working on the heat pump. This equipment contains wiring that carries high voltage. Contact with these wires could result in death or personal injury and/or may also cause property damage.

Troubleshooting

TROUBLESHOOTING: See TABLE 5: Troubleshooting Lookup Chart.
ERROR and OPERATION CODES: See TABLE 6 and TABLE 7.
AUTOMATIC RESET TIME: The heater will automatically reset when an error condition is corrected and resume operation.

NOTICE - These instructions are intended for the use of qualified personnel trained and experienced in the installation and servicing of this type of heating equipment and its related system components. Some states may require installation and service personnel to be licensed. Persons not qualified should not attempt to repair this equipment according to these instructions. These instructions and procedures are not for the use of "do-it-yourself" consumers.

NOTICE - As a preliminary check, make sure that all wire connections are clean and tight and that all wiring conforms to the wiring diagram.

INTERNAL WIRING: If the heater display is blank after the electrical has been installed, refer to Troubleshooting Lookup Chart to determine the cause. Note, the cable between the display board and the control board is keyed to ensure correct connection.

TABLE 5: Troubleshooting Lookup Chart

Problem	Possible Cause	Possible Solution(s)
Unit is not operating	No power to unit	Make sure power is on
	Breaker is tripped	Check the breaker / see note above
	Thermostat too low	Turn thermostat up until unit comes on
	3 minute compressor delay timer still running	Be sure the delay has passed
	Low water flow	Make sure filter is clean
		Make sure filter pump is on
		Unhook cleaning devices
	Outside temperature too low	Check outside ambient temperature or wait for warmer temperatures to operate (Refer to Operating section)
	Fan not functioning	Call for service
Heat pump is running but Display LEDs not on	System Component Failure	Call for service
Heat pump runs continually	Thermostat set too high for ambient temperature	Turn thermostat down
	Evaporator is dirty	Clean by running tap water over the coil without additional nozzle attachment. Do not use pressurized water as it can damage the coil and void warranty.
	Electrical component failure	Turn off pump. If the unit is still running after 3 minutes, turn off the power to the unit and call for service.
Heat pump is cycling (on / off too quickly)	Bad bypass valve or improper water flow	Ensure water flow is sufficient (is the filter pump running continually?) If heat pump continues to cycle, turn unit off to prevent compressor damage.
	Low refrigerant, low abient temperature, or high humidity with low ambient temperature	Check evaporator coil for severe frost. Turn unit off to prevent compressor damage.
		If heat pump continues to cycle, turn unit off to prevent compressor damage. Call for service.
Water is coming from bottom of unit	Condensation	This is normal and there is no reason to be concerned
	Possible water leak	Turn the unit off for several hours, but leave the filter pump running continuously. If water quantity decreases, then it is only condensation. Otherwise there is a possible leak.

⚠ **WARNING** - To avoid possible outer jacket damage or injury: (1) no materials should be stored against the jacket and (2) care should be taken to avoid unnecessary contact (especially by children) with the jacket.

USE ONLY HAYWARD GENUINE REPLACEMENT PARTS

Error codes will be displayed on the controller interface as shown. Refer to TABLE 6 and TABLE 7 below for error code meanings and solutions.

TABLE 6: Electronic Control Fault Error Codes			
Protection/Fault	**Code**	**Reason**	**Solution**
Inlet Temp. Sensor Fault	P01	Temp. sensor broken or short circuit	Check or change the temp. sensor
Outlet Temp. Sensor Fault	P02	Temp. sensor broken or short circuit	Check or change the temp. sensor
Ambient Temp. Sensor Fault	P04	Temp. sensor broken or short circuit	Check or change the temp. sensor
Coil 1 Temp. Sensor Fault	P05	Temp. sensor broken or short circuit	Check or change the temp. sensor
Coil 2 Temp. Sensor Fault	P15	Temp. sensor broken or short circuit	Check or change the temp. sensor
Suction Temp. Sensor Fault	P07	Temp. sensor broken or short circuit	Check or change the temp. sensor
Discharge Temp. Sensor Fault	P081	Temp. sensor broken or short circuit	Check or change the temp. sensor
Exhaust Air Over Temp. Prot.	P082	Compressor overloaded	Check if the compressor is running normally
Antifreeze Temp. Sensor Fault	P09	Antifreeze temp. sensor is broken or short circuit	Check or change the temp. sensor
Pressure Sensor Fault	PP	Pressure sensor is broken	Check or change the pressure sensor
High Pressure Prot.	E01	High pressure switch is broken	Check the pressure switch and cold circuit
Low Pressure Prot.	E02	Low pressure protection	Check the pressure switch and cold circuit
Flow Switch Prot.	E03	No/Little water in water system	Check the water flow and water pump
Waterway Antifreeze Prot.	E05	Water temp. or ambient temp. too low	Check if water & ambient temp. are too low
Inlet & Outlet Temp. Too High	E06	Water flow too low and low differential pressure	Check the water flow and if system is jammed
Antifreeze Prot.	E07	Water flow too low	Check the water flow and if system is jammed
Primary Antifreeze Prot.	E19	Ambient temp. too low	Check if ambient temp. is too low
Secondary Antifreeze Prot.	E29	Ambient temp. too low	Check if ambient temp. is too low
Comp. Overcurrent Prot.	E051	Compressor overloaded	Check if the compressor is running normally
Communication Fault	E08	Comm. failure between controller and main board	Check connection between controller and main board
Communication Fault (Speed Control Module)	E081	Comm. failure between speed control module and main board	Check connection between speed control module and main board
Low AT Protection	TP	Ambient temp. too low	Check if ambient temp. is too low
EC Fan Feedback Fault	F51	Fan motor issue caused fan motor to stop running	Check if fan motor is broken or locked
Fan Motor 1 Fault	F31	1. Motor is in locked rotor state 2. Wire connection between DC fan motor module and fan motor is in bad contact	1. Install a new fan motor 2. Check the wire connection and make sure they are in good contact
Fan Motor 2 Fault	F32	1. Motor is in locked rotor state 2. Wire connection between DC fan motor module and fan motor is in bad contact	1. Install a new fan motor 2. Check the wire connection and make sure they are in good contact

USE ONLY HAYWARD GENUINE REPLACEMENT PARTS

TABLE 7: Frequency Conversion Board Fault Error Codes			
Protection/Fault	**Code**	**Reason**	**Solution**
DRV1 MOP Alarm	F01	MOP drive alarm	Recovery after 150s
Inverter Offline	F02	Communication failure between conversion board and main board	Check communication connection
IPM Protection	F03	IPM modular protection	Recovery after 150s
Comp. Driver Failure	F04	Lack of phase, step or drive hardware damage	Check voltage and frequency conversion board hardware
DC Fan Fault	F05	Motor current feedback open or short circuit	Check if current return wires are connected to motor
IPM Overcurrent	F06	IPM input current to high	Check and adjust the current
Inv. DC Overvoltage	F07	DC bus voltage too high	Check input voltage
Inv. DC Undervoltage	F08	DC bus voltage too low	Check input voltage
Inv. Input Undervoltage	F09	Input voltage too low; Input current too high	Check input voltage
Inv. Input Overvoltage	F010	Input voltage too high (greater than outage protection current RMS)	Check input voltage
Inv. Sampling Voltage	F011	Input voltage sampling fault	Check and adjust the current
Comm. Err DSP-PFC	F012	DSP and PFC connection fault	Check communication connection
Input Overcurrent	F26	Equipment load is too large	Check if unit is overloaded
PFC Fault	F27	PFC circuit protection	Check if the PFC switch tube is short circuited
IPM Overheating	F15	IPM module overheat	Check and adjust the current
Weak Magnetic Warn	F16	Compressor magnetic force too low	Restart the unit after multiple power failures. If fault continues, replace the compressor.
Inv. Input Out Phase	F17	Input voltage lost phase	Check and adjust the voltage
IPM Sampling Current	F18	IPM sampling electricity fault	Check and adjust the current
Inv. Temp. Probe Fail	F19	Sensor short circuit or open circuit	Inspect and replace the sensor
Inv. Overheating	F20	Transducer overheat	Check and adjust the current
Inv. Overheating Warning	F22	Transducer temperature too high	Check and adjust the current
Comp. Overcurrent Warning	F23	Compressor current too high	Check and adjust the current
Input Overcurrent Warning	F24	Input current too high	Check and adjust the current
EEPROM Overcurrent Warning	F25	MCU error	Check if the chip is damaged and replace if necessary
V15V Over/Undervoltage Fault	F28	V15V is overloaded or undervoltage	Check the V15V input voltage (range: 13.5V to 16.5V)

HAYWARD®

NOTES

HAYWARD®

NOTES

FOR FURTHER INFORMATION OR CONSUMER
TECHNICAL SUPPORT, VISIT OUR WEBSITE AT
www.hayward.com

HAYWARD®

Hayward is a registered trademark of
Hayward Industries, Inc. © 2023 Hayward Industries, Inc.

All other trademarks not owned by Hayward are the property of their respective owners.
Hayward is not in any way affiliated with or endorsed by those third parties. For patent information, refer to www.hayward.com/patents.