HAYWARD®
SINCE 1925

TriStar® VS 900 & 950

VS Series Pumps with OmniX®

INDUSTRY-LEADING ENERGY EFFICIENCY

EXPERT LINE® | ONLY FROM POOL PROS | 3+ YEAR PARTS & LABOR WARRANTIES*

*When sold by a Totally Hayward® Partner. Exclusions, other terms and conditions may apply — visit hayward.com/expert for details.

EFFICIENT. RELIABLE. CONNECTED.

Hayward TriStar VS ultra-high efficiency pool pumps are the most efficient pumps in their class. The 900 and 950 models offer features such as a Viton® pump seal, extended warranties and totally enclosed fan-cooled (TEFC) motors to ensure durability and reliable performance. At the center is Hayward's Universal Display, delivering a consistent, intuitive control experience across Omni®, OmniX®, and competitive automation systems. With OmniX embedded intelligence, the pump provides enhanced programmability, advanced diagnostics, and seamless remote connectivity.

INTUITIVE INTERFACE

Designed with usability and flexibility in mind, the new universal display offers an improved user experience with advanced functionality.

UNIVERSAL COMMS

Seamlessly connect to most pool automation systems with integrated universal communication technology.

POWERFUL PERFORMANCE

Elevated flow rates that are ideal for feature-rich pools including bubblers, sheers, laminars and more.

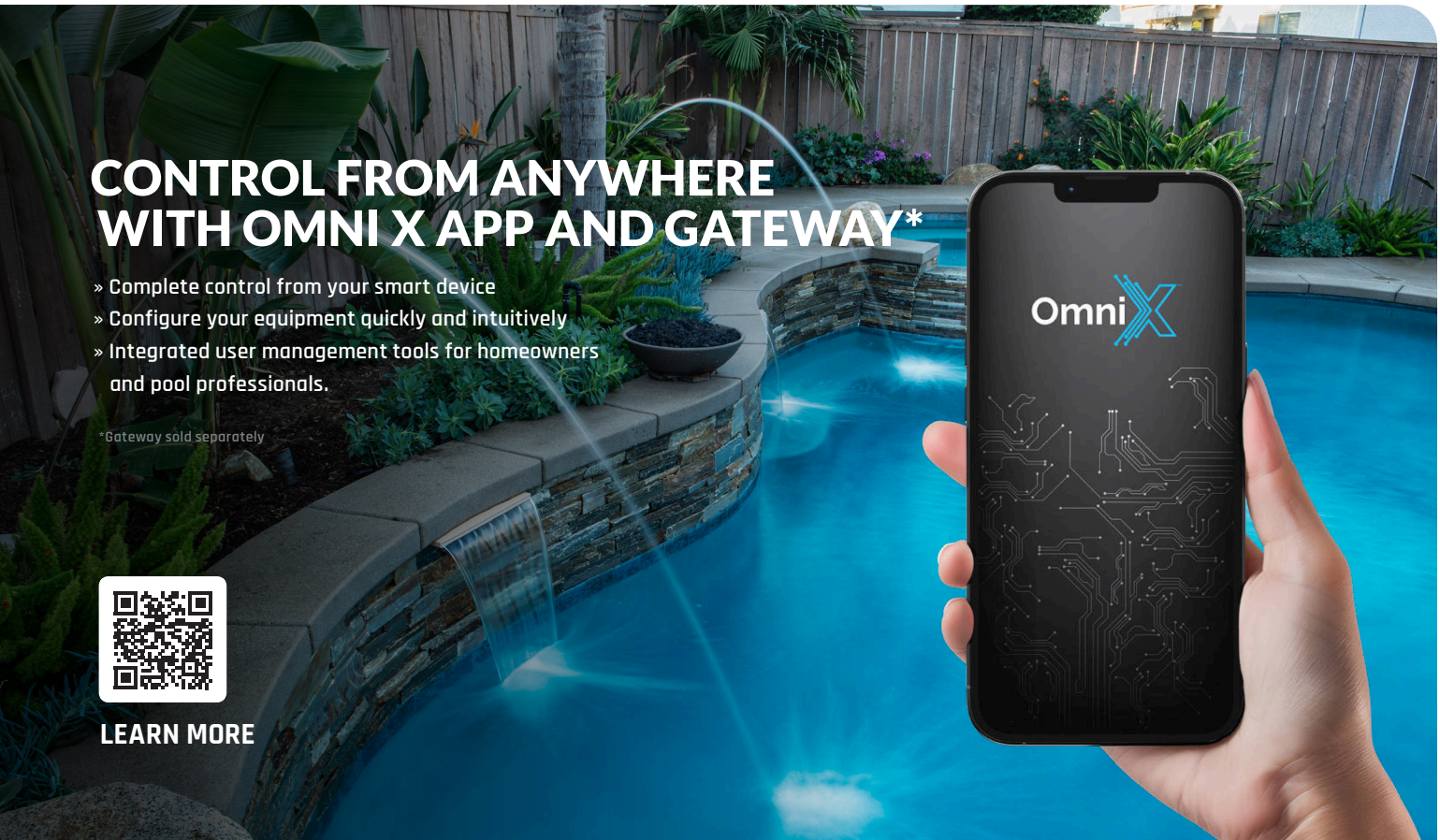

CONTROL FROM ANYWHERE WITH OMNI X APP AND GATEWAY*

- » Complete control from your smart device
- » Configure your equipment quickly and intuitively
- » Integrated user management tools for homeowners and pool professionals.

*Gateway sold separately

LEARN MORE

UNIVERSAL AUTOMATION
Seamlessly connects with Hayward and competitive systems.

SUPERIOR PERFORMANCE
Ideal for feature-rich pools that demand high flow rates.

MOBILE APP CONTROL
Remote access for total control to program and diagnose issues from anywhere.

SIMPLE AND INTUITIVE OPERATION
One consistent user interface and experience across all products with the built-in universal display.

TriStar® 900
SP32900VSPX1

ENERGY STAR

EXPERT LINE™
ONLY FROM POOL PROS

- **No-rib strainer basket with see-through cover** ensures easy debris removal
- **Permanent magnet, totally enclosed fan-cooled motor** offers more efficient operation and long-lasting reliability
- **Advanced hydraulic design** provides ample power to replace most high-performance pumps up to 1.5 full-rate or 2.0 max-rate HP
- **Wall-mountable touchpad control** can be rotated in four directions
- **Side and rear conduit entry** accommodate both high and low voltage connections for simple installation
- **Upgraded dual-voltage motor drive** delivers 30% quieter high-speed operation than other models
- **Total Control — Advanced UI** delivers simple and intuitive programming, along with the flexibility of Omni or OmniX automation.

WORKS GREAT WITH OMNI X COMPATIBLE GAS HEATERS AND ACCESSORIES

UNIVERSAL H-SERIES HEATER

UNIVERSAL HC SERIES HEATER

OMNI X GATEWAY

SPECIFICATIONS

MODEL NUMBER	TOTAL HP	AUTOMATION COMPATIBILITY	INPUT VOLTAGE	CURRENT RATING	WEF	PLUMBING CONNECTIONS	STRAINER VOLUME	WARRANTY
SP32900VSPX1	1.85-0.85	OmniX / OmniLogic / Universal Comms*	230-115V	7.4-7.2	12.9-8.3	2" x 2.5" Unions	137 CU. IN.	3 years**
SP32950VSPX1	2.7-1.5	OmniX / OmniLogic / Universal Comms*	230-115V	12.2-10.2	10.1-7.3	2" x 2.5" Unions	137 CU. IN.	3 years**

*Universal Comms allows for connectivity to competitive automation systems from Pentair and Jandy®.
**When sold by a Totally Hayward® partner. Exclusions, other terms and conditions may apply — visit hayward.com/expert for details.

TRISTAR VS 900 AND 950 DIMENSIONS (INCHES)

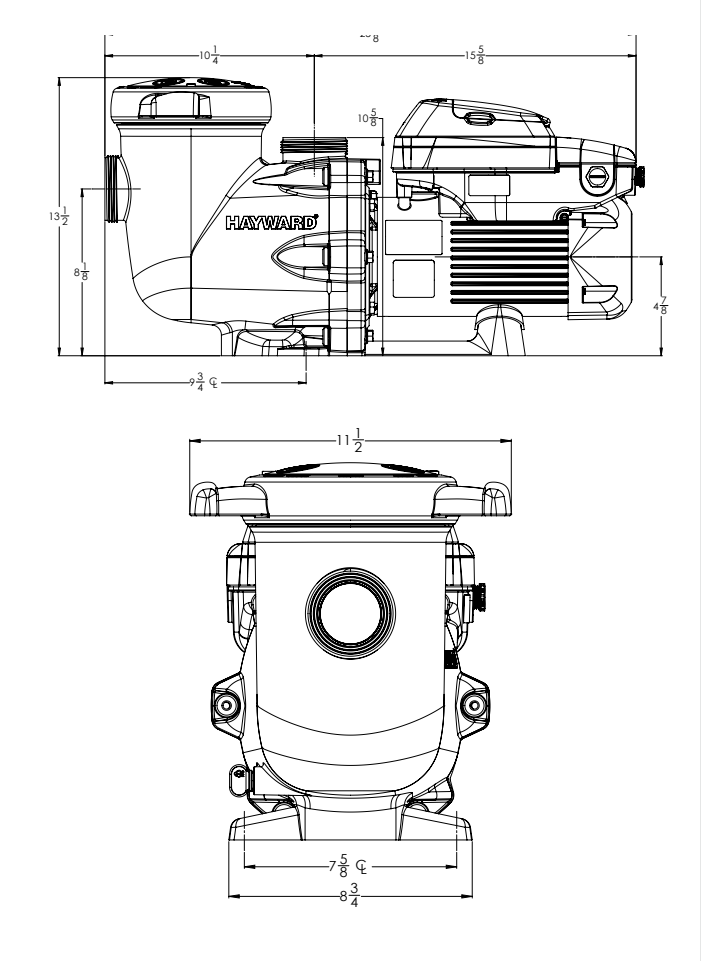

TRISTAR VS 900 PERFORMANCE COMPARISON

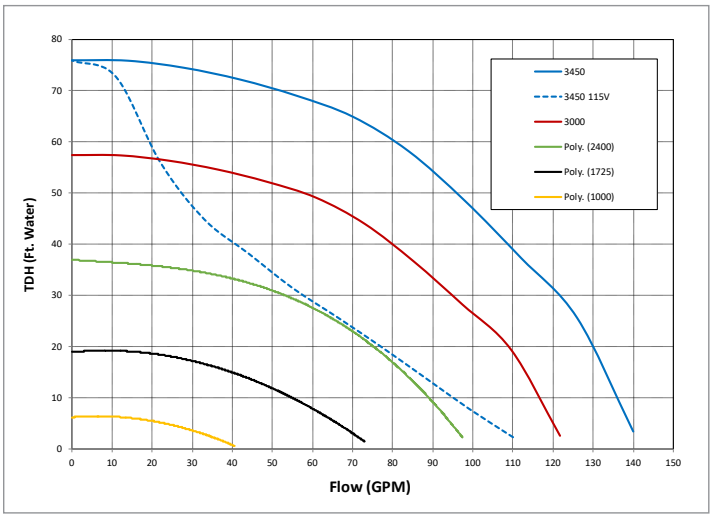

*2.31 Feet of Water = 1 PSI

TRISTAR VS 950 PERFORMANCE COMPARISON

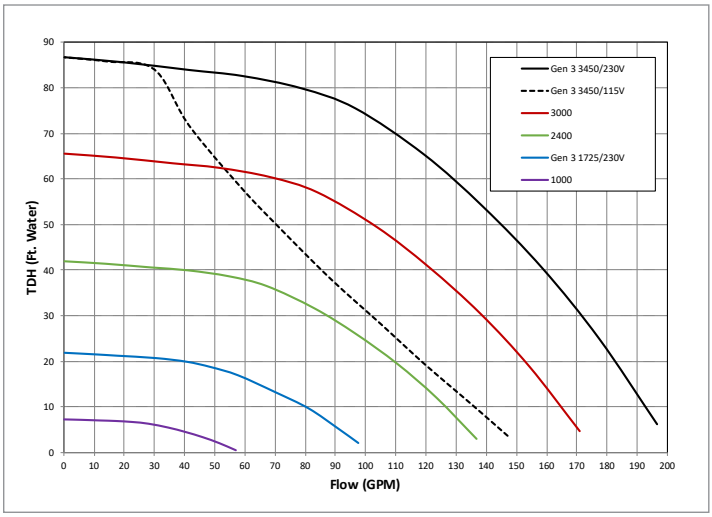

*2.31 Feet of Water = 1 PSI

TriStar VS 900 and 950 pumps are listed by:

» hayward.com » 1-888-HAYWARD

Pumps » Filters » Heaters » Water Quality » Automation » Lighting » Water Features » Cleaners » White Goods

Hayward, Hayward & Design, the H logo, Totally Hayward, Expert Line, TriStar, Omni, OmniLogic, and OmniX are registered trademarks of Hayward Industries, Inc. ENERGY STAR is a registered mark owned by the U.S. government. All other trademarks not owned by Hayward are the property of their respective owners. Hayward is not in any way affiliated with or endorsed by those third parties. ©2026 Hayward Industries, Inc.

LITTS90095026

PROUD AMERICAN COMPANY SINCE 1925