1011728 RevB

HAYWARD®

AquaRite® S3 Series

Pool Chlorinator and Automation Control

Owner's Manual

Contents

Before You Begin.....3
Mounting the Equipment.....8
Plumbing.....9
Electrical.....10
Preparing Water.....18
Configuration.....21
Operation.....23
Remote Operation.....30
Maintenance.....32
Replacement Parts.....33

AQRS340
AQRS325
AQRS315

Hayward Industries
1415 Vantage Park Dr., Suite 400
Charlotte, NC 28203
Phone: (908) 355-7995
www.hayward.com

USE ONLY HAYWARD GENUINE REPLACEMENT PARTS

IMPORTANT SAFETY INSTRUCTIONS

When using this electrical equipment, basic safety precautions should always be followed, including the following:

READ AND FOLLOW ALL INSTRUCTIONS

- Use Copper Conductors Only
- Disconnect all AC power during installation.
- ⚠ **WARNING:** To reduce the risk of injury, do not permit children to use this product unless they are closely supervised at all times.
- Hayward salt systems are designed, tested and sold as systems and are certified by several agencies around the globe --- with each component of the systems meeting all required certifications and attendant legal requirements. The use of an untested, uncertified parts with Genuine Hayward salt chlorination products could lead to premature product failure.
- Pursuant to the terms and conditions of any applicable Warranty, the use of a non-genuine Hayward replacement salt chlorination cell on any Hayward automation or chlorination product will void any Warranty.
- A green colored terminal is located inside the wiring compartment. To reduce the risk of electric shock, this terminal must be connected to the grounding means provided in the electric supply service panel with a continuous copper wire equivalent in size to the circuit conductors supplying the equipment.
- All field installed metal components such as rails, ladders, drains, or other similar hardware within 3 meters of the pool, spa or hot tub shall be bonded to the equipment grounding bus with copper conductors not smaller than 8 AWG US / 6 AWG Canada.
- NOTICE TO USERS: This control product is to be used only in accordance with the directions of this label. It is an offense under the Pest Control Products Act to use a control product under unsafe conditions.

⚠ WARNING

- **INGESTION HAZARD:** This product contains a button cell or coin battery.
- **DEATH** or serious injury can occur if ingested.
- A swallowed button cell or coin battery can cause **Internal Chemical Burns** in as little as **2 hours.**
- **KEEP** new and used batteries **OUT OF REACH or CHILDREN.**
- **Seek immediate medical attention** if a battery is suspected to be swallowed or inserted inside any part of the body.

- ⚠ **WARNING:** Even used batteries may cause death or serious injury.
- ⚠ **WARNING:** Call a local poison control center for treatment information.
- ⚠ **WARNING:** Remove and immediately recycle or dispose of used batteries according to local regulations and keep away from children. Do NOT dispose of batteries in household trash or incinerate.

USE ONLY HAYWARD GENUINE REPLACEMENT PARTS

- ⚠ **WARNING:** This product contains non-rechargeable batteries. Do NOT force discharge, recharge, disassemble, heat above 85°C, or incinerate. Doing so may result in injury due to venting, leakage, or explosion resulting in chemical burns.

- ⚠ **WARNING:** This product contains non-replaceable batteries. Do NOT under any circumstances attempt to remove or replace the factory-installed battery.

- ⚠ **WARNING:** Non-rechargeable batteries are not to be recharged.

NOTICE: This product contains a Panasonic BR1225 coin-type lithium battery.

NOTICE: The nominal voltage of the battery contained within this product is 3V.

Certificate of Conformity

Product:	AQRS3 & AQRS3 Omni Series
CPSC Regulation:	Safety Standard for Button Cell or Coin Batteries and Consumer Products Containing Such Batteries Underwriters Laboratories UL 4200A-2023
Manufacturer:	Hayward Industries 1415 Vantage Park Drive, Suite 400, Charlotte, NC 28203 Technical Service Phone: (908) 355-7995
Manufacture Location:	Hayward Industries, 61 Whitecap Drive, N. Kingstown, RI 02852
Date Manufactured:	The serial number consists of 14 characters Example serial number: 1A23045-1045631 The 3rd - 4th digits are the year The 5th - 7th digits are the # day of year Example above is the 45th day of 2023
Test Report By:	Hayward Industries One Hayward Industrial Drive, Clemmons, NC 27012 Phone: (908) 355-7995 Test Report: March 2024

I hereby certify that the finished product(s) covered by this certificate comply with the rules, bans, standards, and regulations stated herein, and that the information in this certificate is true and accurate to the best of my knowledge, information, and belief. I understand and acknowledge that it is a United States federal crime to knowingly and willfully make any materially false, fictitious, or fraudulent statement, representation, or omission on this certificate.

Works only with a genuine S3 Series Hayward salt cell

Certified to NSF/ANSI Standard 50

Omni not evaluated by NSF

SAVE THESE INSTRUCTIONS

FCC Statement

This device complies with part 15 of the FCC rules. Operation is subject to the following two conditions: (1) This device may not cause harmful interference, and (2) this device must accept any interference received, including interference that may cause undesired operation.

Changes or modifications not expressly approved by Hayward could void the user's authority to operate this equipment.

NOTE: This equipment has been tested and found to comply with the limits for a Class B digital device, pursuant to Part 15 of the FCC Rules. These limits are designed to provide reasonable protection against harmful interference in a residential installation. This equipment generates, uses and can radiate radio frequency energy and, if not installed and used in accordance with the instructions, may cause harmful interference to radio communications. However, there is no guarantee that interference will not occur in a particular installation. If this equipment does cause harmful interference to radio or television reception, which can be determined by turning the equipment off and on, the user is encouraged to try to correct the interference by one or more of the following measures:

-- Reorient or relocate the receiving antenna.
-- Increase the separation between the equipment and receiver.
-- Connect the equipment into an outlet on a circuit different from that to which the receiver is connected.
-- Consult the dealer or an experienced radio / TV technician for help.

Industry Canada Statement

This Class B digital apparatus complies with Canadian ICES-003.
Cet appareil numérique de la classe B est conforme à la norme NMB-003 du Canada.
The term "IC" before the certification / registration number only signifies that the Industry Canada technical specifications were met.

Before you Begin

The AquaRite® S3 is an automatic chlorine generation system with control functions for pool or spa sanitization. Chlorine generation requires a concentration of salt (sodium chloride) in the pool water. The unique design of the AquaRite S3 allows for a broad range of salt concentration ensuring efficient chlorine production regardless of salt level. The AquaRite S3 automatically sanitizes your pool by converting the salt into free chlorine which kills bacteria and algae in the pool. Chlorine will revert back to sodium chloride after killing bacteria. These reactions will continuously recycle virtually eliminating the need to add sanitizing chemicals to your pool. The only time you may need to add more salt to the pool is when water is replenished due to backwashing, draining, or splashing (not evaporation).

The AquaRite S3 also provides control functions adding convenience to pool and spa management. Built in functions include variable speed filter pump control, single speed filter pump control (requires Smart Relay), heater control, pool cover detection, and more.

USE ONLY HAYWARD GENUINE REPLACEMENT PARTS

The AquaRite S3 is offered in three models with the AQRS340 designed to handle the purification needs of most residential swimming pools up to 40,000 gallons (150,000 liters), or most commercial pools up to 25,000 gallons (95,000 liters). Check local codes for other restrictions. The actual amount of chlorination required to properly sanitize a pool varies due to bather load, rainfall, temperature, and the pool's cleanliness.

Use the proper AquaRite S3 model for your pool (installation and mounting requirements are the same for all models):
AQRS340 - for pools up to 40,000 gallons
AQRS325 - for pools up to 25,000 gallons
AQRS315 - for pools up to 15,000 gallons

What's Included

Before attempting to install the AquaRite S3 system, check that the following components have been included in the package:

- AquaRite S3 Electronics Unit
- Flow Switch
- Electrolytic Cell

What's NOT Included

Some of the additional items that you may need to complete an installation include:

- Wire/conduit for 115 VAC or 230 VAC connection from the main panel to AquaRite S3
- Wire/conduit for filter pump
- Wire for remote heater control
- Hayward Smart Relay - required for single speed filter pump control
- Temperature sensors (water sensor necessary for heater control, air sensor needed for recirculation freeze control)
- Mounting hardware (screws, bolts, etc.) for mounting AquaRite S3
- Tools and PVC glue for installing the TurboCell and flow switch

NOTE: Hayward does not recommend using the AquaRite S3 to generate bromine.

NOTE: Before installing this product as part of a saline water purification system in a pool or spa using natural stone for coping or for immediately adjacent patios/decking, a qualified stone installation specialist should be consulted regarding the appropriate type, installation, sealant (if any) and maintenance of stone used around a saline pool with an electronic chlorine generator in your particular location and circumstances.

NOTE: The use of dry acid (sodium bisulfate) to adjust pool pH is discouraged especially in arid regions where pool water is subject to excessive evaporation and is not commonly diluted with fresh water. Dry acid can cause a buildup of by-products that can damage your chlorinator cell.

USE ONLY HAYWARD GENUINE REPLACEMENT PARTS

The functions and features described in this manual assume that the AquaRite S3 is using the latest firmware version available from Hayward. For the AquaRite S3, a USB port is used for firmware upgrades. The latest firmware can be found on the AquaRite S3's product page on the Hayward website. For instructions on how to upgrade firmware, refer to page 22.

Although the AquaRite S3 is easy to use, it is important to completely read through this manual before attempting to install, configure and operate the unit.

Features

The AquaRite S3 offers the following features:

- can generate chlorine using a broad range of salt concentrations from 1200 PPM to 8000 PPM
- can control and schedule a Hayward Variable Speed (VSP) pump using the internal RS-485 connection, a Pentair VSP using a Hayward HLPMPCONV converter (sold separately) or a single speed pump using a Hayward Smart Relay (sold separately)
- can control a gas heater, heat pump or any other heater that uses a low voltage on/off remote connection (requires Hayward water temperature sensor sold separately)
- inputs for water and air temperature sensors (temperature sensors sold separately)
- connection for flow switch used to detect water flow
- connection for pool cover detection (lowers chlorine production when the pool is covered)
- can be powered by either 115 or 230 VAC
- offers recirculation freeze control which turns on the filter pump automatically to prevent freezing (requires Hayward air temperature sensor sold separately)

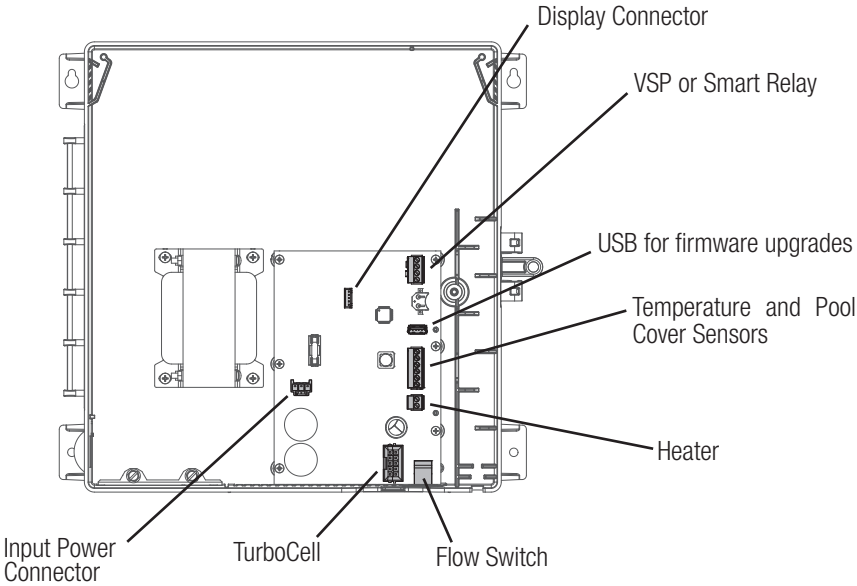

USE ONLY HAYWARD GENUINE REPLACEMENT PARTS

Front Panel Removal

DANGER of Death, Injury or Property Damage if procedure not followed. Dead front removal is required for this installation. Power to the AquaRite S3 panel MUST be shut off before the dead front is removed. This means a complete shutdown of power to the entire AquaRite S3 panel.

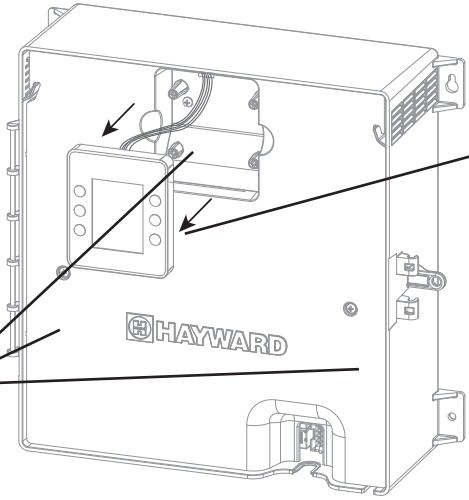

Pull the display away from the panel by grasping it with your hand (no tools required). Then, remove the 3 screws and pull the plastic panel away from the enclosure. It is not necessary to disconnect the display wiring.

Remove three screws

Installation Steps

Details on each installation step are presented on the following pages:

1. Mounting the equipment (page 8)
   - AquaRite S3 main unit
   - Optional Temperature sensors
2. Plumbing (page 9)
   - TurboCell
   - Flow Switch
3. Electrical Wiring (page 10)
   - High Voltage
   - Low voltage wiring (Smart Relay, VSP, heater, sensors, heater, flow switch and TurboCell)
4. Prepare the pool water (page 18)
   - General Water Chemistry
   - Salt
5. System Startup (page 20)
   - Configuration
   - Operation

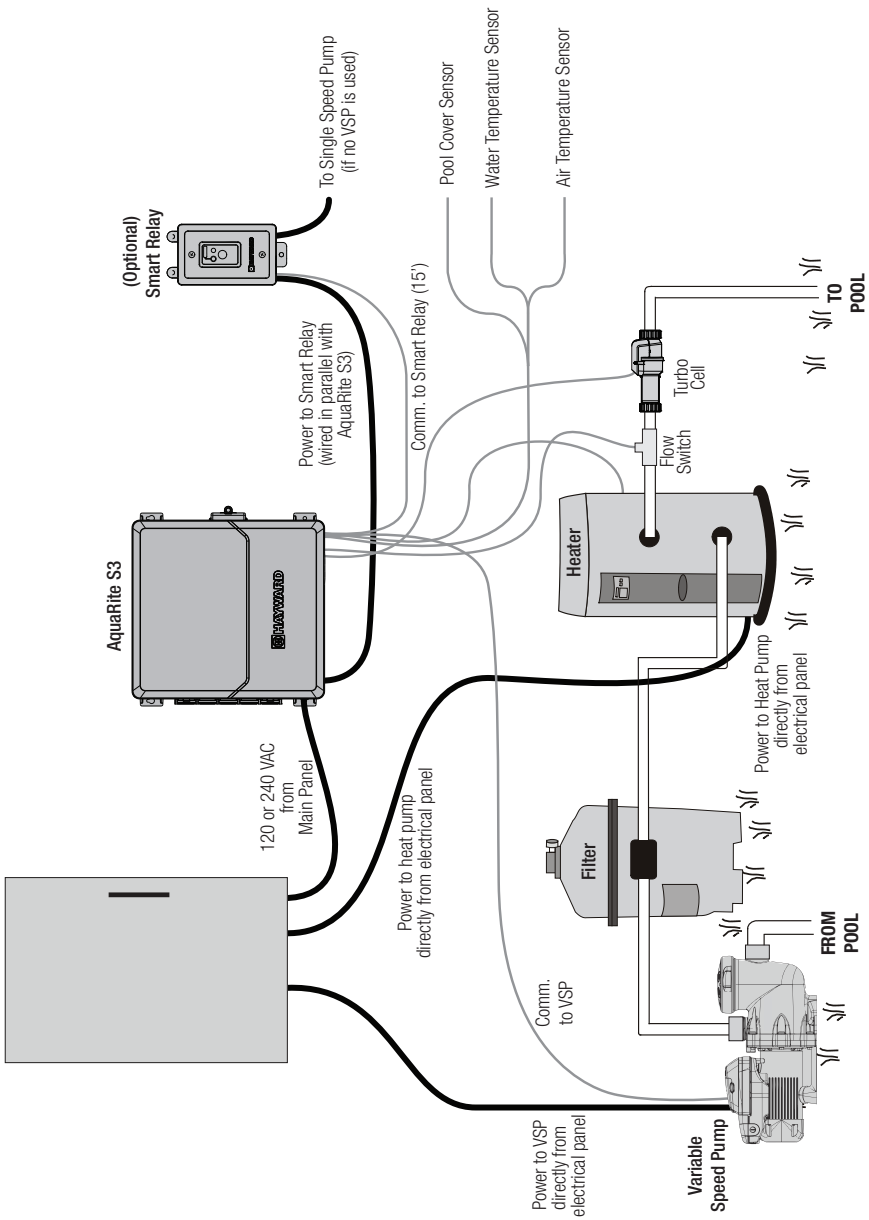
(Optional)
Smart Relay
To Single Speed Pump
(if no VSP is used)
Pool Cover Sensor
Water Temperature Sensor
Air Temperature Sensor
Power to Smart Relay
(wired in parallel with
AquaRite S3)
Comm. to Smart Relay (15')
TO
POOL
Turbo
Cell
Flow
Switch
AquaRite S3
Heater
Power to Heat Pump
directly from
electrical panel
120 or 240 VAC
from
Main Panel
Power to heat pump
directly from electrical panel
Filter
FROM
POOL
Comm.
to VSP
Power to VSP
directly from
electrical panel
Variable
Speed Pump

Mounting the Equipment

AquaRite S3 Enclosure

The AquaRite S3 is contained in a raintight enclosure that is suitable for outdoor mounting. The control must be mounted a minimum of 6 ft. (2 meters) horizontal distance from the pool/spa (or more, if local codes require). The AquaRite S3 is designed to mount vertically on a flat surface with the knockouts facing downward. Because the enclosure is vented (disperses heat from inside the box), it is important not to block the four sides of the control. Do not mount the AquaRite S3 inside a panel or tightly enclosed area. Plugs are supplied to seal any unused knockouts.

When selecting a mounting location, note that the standard cables supplied with the included flow switch and TurboCell, as well as optional accessories like Hayward temperature sensors, are all 15 ft. (5m) long. Try to mount the AquaRite S3 at a height/location where the screen and keypad can be easily used. Select the proper mounting hardware given the size and weight of the unit. The AquaRite S3 mounting brackets require a total of 4 mounting screws/bolts to fasten the AquaRite S3 to the mounting surface.

Temperature Sensors (sold separately)

If using the heater function or the recirculation freeze protection function, the AquaRite S3 will require the use of Hayward temperature sensors. Refer to the following information for mounting instructions.

Water Sensor (required for heater control)

This sensor is used to measure the pool/spa temperature and is installed in the filtration plumbing after the filter but before either the solar or conventionally fueled heaters—refer to the plumbing overview diagram.

1. Drill a 3/8” (10mm) diameter hole in the PVC piping and remove all chips and burrs.

2. Insert sensor until O-ring collar sits flush on the hole.

3. Position hose clamp over the sensor and gently tighten until O-ring makes an adequate seal. Do not overtighten.

Air Sensor (required for recirc freeze protection)

Mount the air sensor outdoors to a surface with low thermal conductivity. IMPORTANT: The air sensor must not be mounted in direct sunlight.

USE ONLY HAYWARD GENUINE REPLACEMENT PARTS

Plumbing

Ensure that the AquaRite S3 installation does not constitute a cross connection with the local potable water supply. Consult local plumbing codes.

The AquaRite S3 is packaged with a TurboCell, flow switch and cell unions.

The flow switch and cell should be plumbed in the return line to the pool/spa. The preferred installation is after (downstream) all the pool equipment (filter, heater, solar, etc.). The electrolytic cell and flow switch tee fitting are designed to be plumbed into 2" (51mm) PVC pipe. Adapters (not included) can be used for systems with 1½" (38 mm) plumbing.

For proper plumbing, refer to the overview diagram on page 7. Alternate configuration #1 shows the flow switch can also be in front of the cell. Configurations #2 and #3 allow for chlorination of both the pool and spa during spa spillover operation, but prevent overchlorination of the spa during "spa only" operation. Never use configuration #4.

Flow Switch: IMPORTANT: There must be at least a 12" (25cm) straight pipe run before (upstream) the flow switch. If the switch is plumbed after the cell, the cell can by counted as the 12" (25cm) of straight pipe. To ensure proper operation, verify that the arrow on the flow switch (located on top of gray hex) points in the direction of water flow.

Electrolytic Cell: Install using the unions provided. Tighten unions BY HAND for a watertight seal. For pool/spa combination systems with spillover, use configurations #2 or #3 above to allow chlorination of both the pool and spa during spillover but preventing overchlorination when operating the spa only.

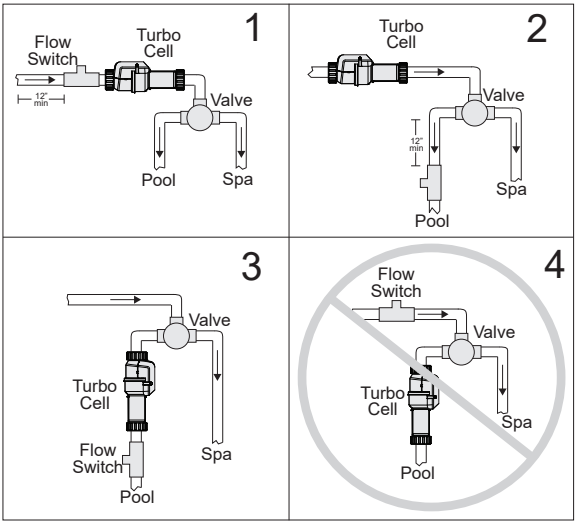

USE ONLY HAYWARD GENUINE REPLACEMENT PARTS

Electrical

The AquaRite S3 requires both high and low voltage connections. A high voltage connection will be made to the AquaRite S3 to power the unit. Low voltage connections will be made to sensors, VSP wiring, optional Smart Relay, heater wiring and more. Enclosure knockouts are provided for high voltage wiring. A low voltage channel inside the enclosure will ensure a separation of wiring and organize the low voltage wiring coming into the AquaRite S3 enclosure. Refer to the diagram below for the location of knockouts and internal wiring paths. Always:

- Ensure that power is disconnected prior to performing any wiring
- Follow all local and NEC (CEC if applicable) codes
- Use copper conductors only
- Always remove power to the AquaRite S3 before removing the front panel

Inside View

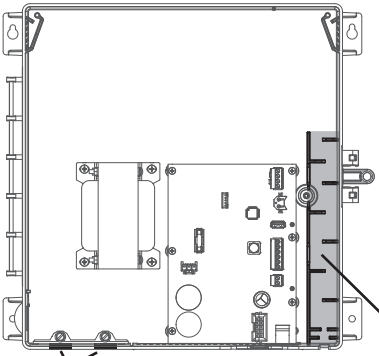

Bottom View

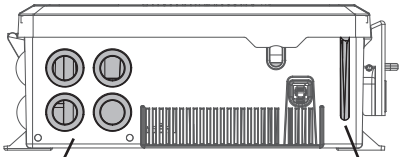

USE ONLY HAYWARD GENUINE REPLACEMENT PARTS

High Voltage Wiring

Input Power

If the AquaRite S3 will be controlling a VSP or single speed pump using a Smart Relay, it must be powered continuously. A schedule will be created for the pump and the AquaRite S3 will generate chlorine only when the pump is running. If the AquaRite S3 will not be controlling the filter pump, it should be wired to the load side of the pump timer or in parallel with the filter pump. This will ensure that the AquaRite S3 will power up with the pump and only generate chlorine when the pump is running. If not wired in that manner, the flow switch will enable/disable the chlorinator function.

Power Connection

The AquaRite S3 can be powered by 115 VAC (2A) or 230 (1A) VAC. There is no need to manually select or use different input terminals, the AquaRite S3 will automatically detect the input voltage. A wiring harness is included and will plug into the input power connector shown below. Wire nuts are supplied for connecting the harness to input power. Wire the harness according to the diagram below. Connect the ground wire to one of the green ground screws as shown.

For Canadian installations, the AquaRite S3 shall be connected to a circuit protected by a class A ground fault interrupter.

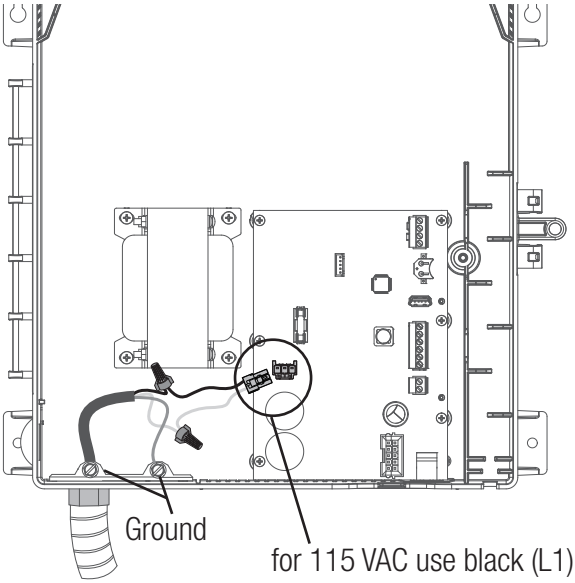

USE ONLY HAYWARD GENUINE REPLACEMENT PARTS

If the AquaRite S3 is controlling a single speed filter pump using a Smart Relay
Use this wiring method when the AquaRite S3 is controlling a single speed filter pump with a Smart Relay. The Smart Relay and the AquaRite S3 are continuously powered as shown. The AquaRite S3 will control the Smart Relay's function using the low voltage communication wiring. The diagrams below show wiring for 115 VAC and 230 VAC.

115 VAC
Single Speed Pump

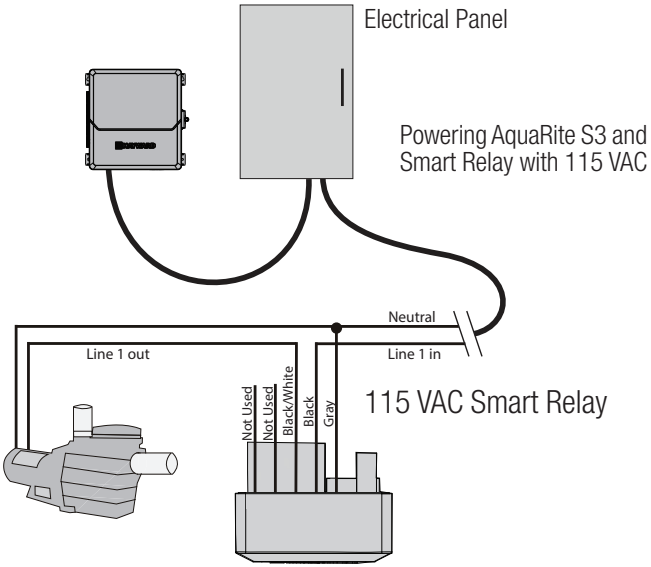

OR

230 VAC
Single Speed Pump

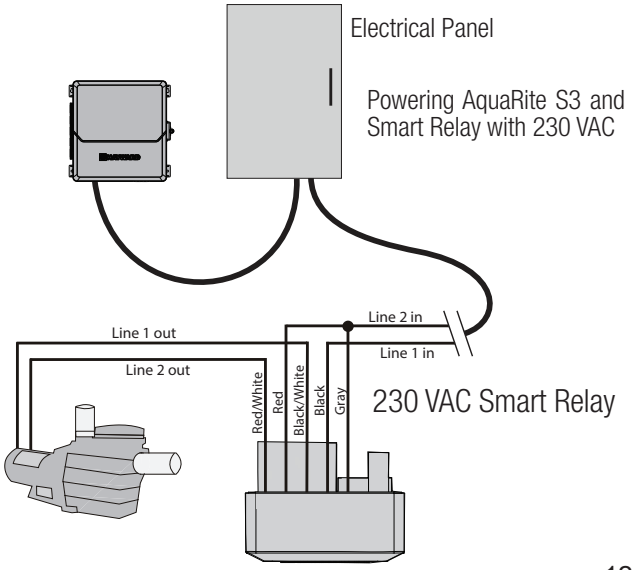

USE ONLY HAYWARD GENUINE REPLACEMENT PARTS

If the AquaRite S3 is controlling a VSP

Use this wiring method when the AquaRite S3 is controlling a Hayward VSP. For Pentair VSPs, a Hayward HLPMPCONV converter (sold separately) must be used. The pump and the AquaRite S3 are continuously powered as shown. The AquaRite S3 will control the pump's function using the low voltage communication wiring.

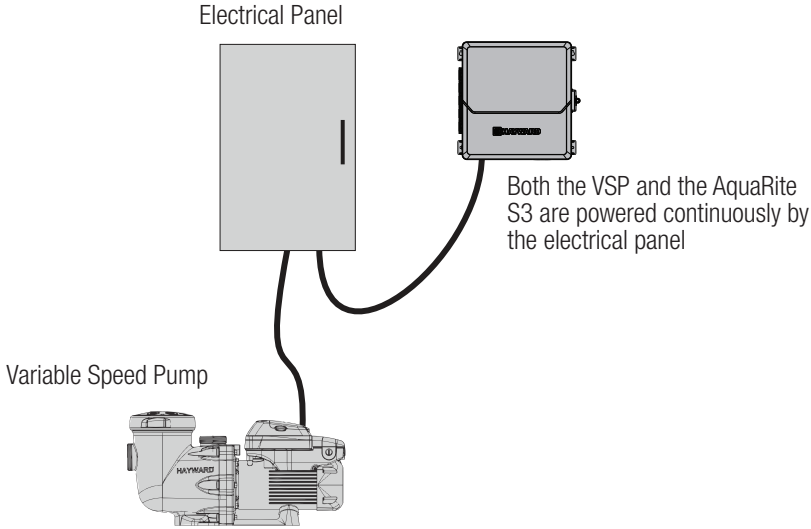

If the AquaRite S3 is NOT controlling the filter pump

Use this wiring method when the AquaRite S3 is not controlling the pump. Power from the filter pump timer or source will power the pump and AquaRite S3 at the same time.

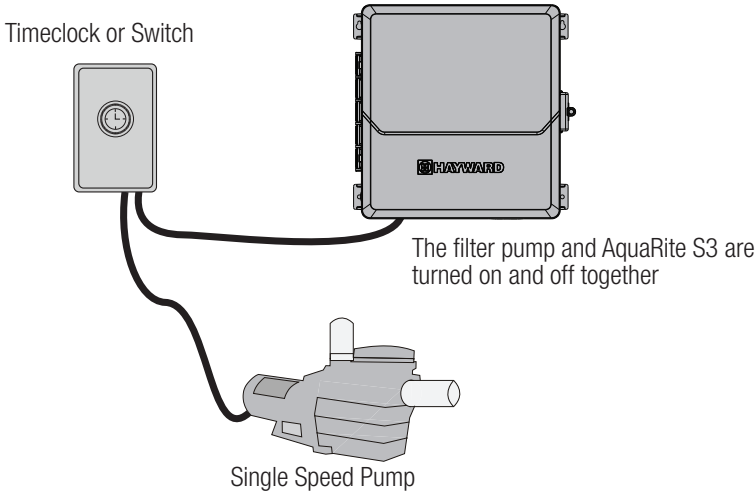

USE ONLY HAYWARD GENUINE REPLACEMENT PARTS

Low Voltage Wiring

NOTE: There is a low voltage channel on the right side of the AquaRite S3 enclosure shown on page 10. All low voltage wiring that enters/exits the enclosure must run through this channel. There is a foam gasket included with the AquaRite S3 that should be used to seal the channels's exit after wiring is complete. Do not run low voltage wiring through a knockout or with any high voltage wiring.

Smart Relay Wiring

Smart Relays rely on communication from the AquaRite S3. A Smart Relay comes with a 15ft 4 conductor cable and is wired to the RS-485 connector. Wire the cable as shown in the diagram. After connecting the wires to the connector, run the communication cable through the low voltage Wiring Channel as shown.

To ease wiring, the connector can be lifted off the onboard pins. Connect the Smart Relay communication wires to their proper screw terminals, then push the connector back onto the pins. For best results, strip back leads 1/8" before inserting into the screw terminals.

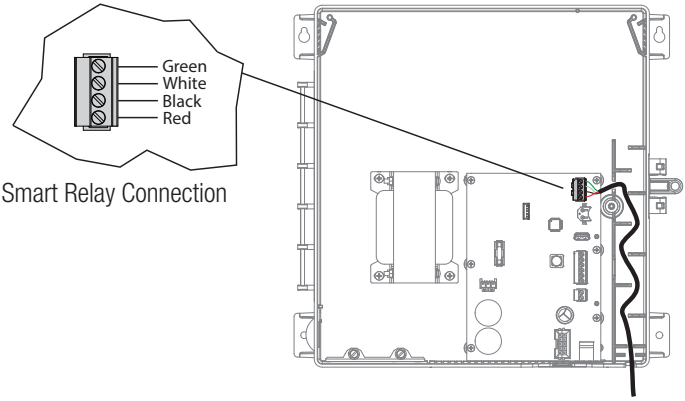

Smart Relay Connection

Hayward Variable Speed Pump (VSP) Wiring

The Hayward TriStar 950, TriStar 900, Super Pump 700 and MaxFlo 500 pumps wire directly to the RS-485 connector and will be fully controlled by the AquaRite S3 (schedules and speeds). Refer to the VSP Communication Wiring table and diagrams on the following page for VSP communication wiring instructions. For Pentair VSP models, use a Hayward HLPMPCONV converter (sold separately). Refer to the HLPMPCONV instructions for wiring information. After wiring, run the communication cable through the low voltage Wiring Channel (same as Smart Relay above).

To ease wiring, the connector can be lifted off the onboard pins. Connect the VSP communication wires to their proper screw terminals, then push the connector back onto the pins. For best results, strip back leads 1/8" before inserting into the screw terminals.

VSP Communication Wiring Table

Pump Model	S3 Conn.	Pump Conn.
TriStar VS 950 (before Jan 2019)	2	7
	3	8
	4	1
*TriStar VS 950 (after Jan 2019)	2	A or 2
*TriStar VS 900	3	B or 3
*Super Pump VS 700	4	COM or 4
*MaxFlo VS 500		

* Disconnect onboard display and set all dip switches to OFF position.

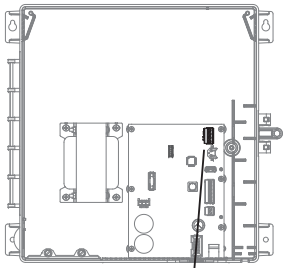

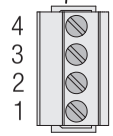

For pump models with dip switches, set all switches to OFF position (as shown). Remove the display cable. Use the spare connector taped to the display cable for the communication cable connection.

TriStar VS 900, Super Pump VS 700, MaxFlo VS 500

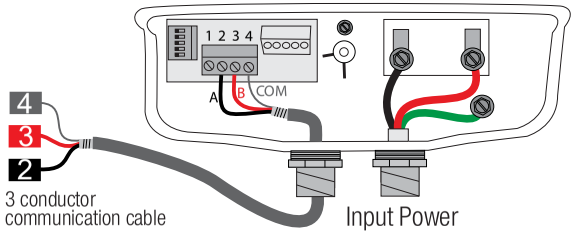

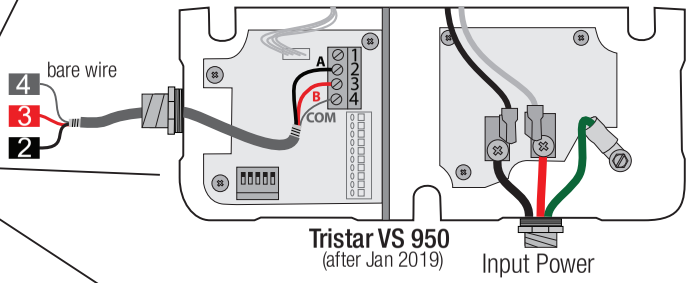

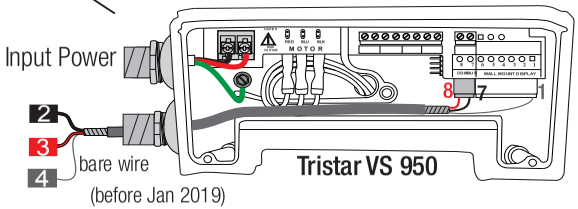

Heater Control

The AquaRite S3 provides a set of low voltage dry contacts that can be connected to most gas heaters or heat pumps with 24V control circuits. Manuals supplied with most heaters include specific wiring instructions for connecting the heater to an external control (usually identified as “2-wire” remote control). For millivolt or line voltage heaters, contact Hayward Technical support.

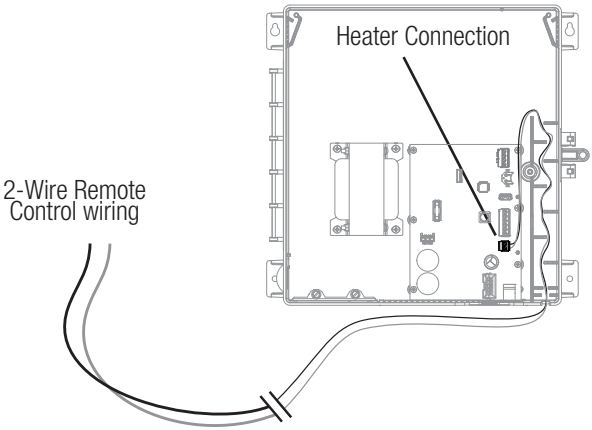

1. Wire heater to 120/240V power source per the instructions in the heater manual. The AquaRite S3 does NOT control the power going to the heater.
2. Wire the AquaRite S3 heater output (shown above) to the heater’s remote control connection (refer to heater manufacturer’s manual). Many internal parts of the heater can get very hot--see the heater manufacturer’s recommendations on the minimum temperature rating for wires. If no guidance is given, use 105°C rated wire.
3. Refer to the heater manual but it’s very likely that the heater’s ON/OFF switch must be set to ON and the thermostat set to the maximum (hottest) setting.

Sensors

Temperature Sensors

The AquaRite S3 utilizes Hayward 10K ohm thermistor type sensors for measurement of pool and air temperature. The sensors come with a 15 ft cable. If a longer cable is required, contact the Hayward Technical support for information on suitable cable types and splices.

Temperature sensors are wired to the 6 position connector shown on page 5 and below. To ease wiring, the connector can be lifted off the onboard pins. Connect the temperature sensors to their proper screw terminals, then push the connector back onto the pins. For best results, strip back leads 1/8” before inserting into the screw terminals.

Pool Cover Sensor
If the pool has a motorized cover, the AquaRite S3 can automatically scale back operational limits (both chlorination setpoint and pump speed) to ensure overchlorination doesn't occur. The pool cover sensor must use a normally open switch that connects to the pool cover terminals shown below. Refer to the pool cover manufacturer's literature to determine compatibility.

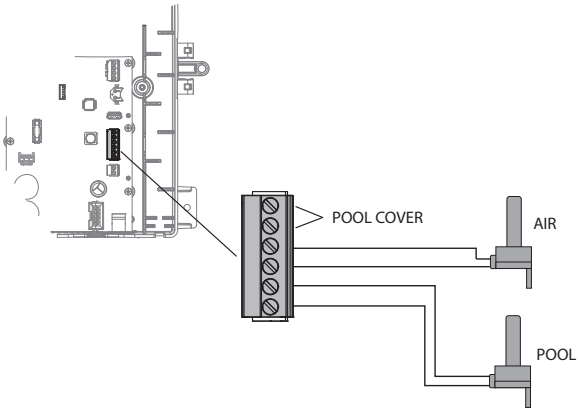

Final Steps
With the previous wiring completed, locate the precut removable foam gasket that can be used to seal the low voltage exit. Wrap it around the low voltage wiring at the exit of the enclosure (shown below). Work the gasket into the exit slot until it is fully sealed then re-install the panel and display.

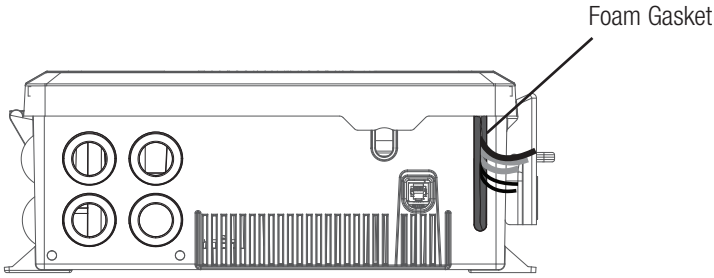

Flow Switch
The flow switch cable plugs into the flow switch connector on the bottom of the AquaRite S3's enclosure shown on page 5. Ensure that the connector latch "snaps" into place.

TurboCell
The TurboCell should be plugged in AFTER the AquaRite S3 cover panel is installed. Refer to page 5 for the location of the chlorinator cell connector.

USE ONLY HAYWARD GENUINE REPLACEMENT PARTS

Preparing Pool/Spa Water

Salt Chlorination

The AquaRite S3 automatically converts salt into free chlorine which kills bacteria and algae in the pool/spa. Chlorine will revert back to sodium chloride after killing bacteria. These reactions will continuously recycle, virtually eliminating the need to add sanitizing chemicals to your pool/spa. The only time you may need to add more salt to the pool/spa is when water is replenished due to backwashing, draining, or splashing (not evaporation). The actual amount of chlorination required to properly sanitize a pool varies due to bather load, rainfall, temperature, and the pool's cleanliness.

Water Chemistry

This table summarizes the levels that are recommended by the Association of Pool and Spa Professionals (APSP). The salt level listed below is a recommendation which allows for effective chlorine generation but generally stays below the level of human taste. If running higher levels, note that swimmers may taste the presence of salt.

CHEMICAL	IDEAL LEVELS
Salt	2700 to 3400 ppm
Free Chlorine	1.0 to 3.0 ppm
pH	7.2 to 7.8
Cyanuric Acid (Stabilizer)	30 to 50 ppm
Total Alkalinity	80 to 120 ppm
Calcium Hardness	200 to 400 ppm
Metals	0 ppm
Saturation Index	-.2 to .2 (0 best)

Saturation index

The saturation index (Si) relates to the calcium and alkalinity in the water and is an indicator of the pool water "balance". Your water is properly balanced if the Si is 0 ± 0.2. If the Si is below -0.2, the water is corrosive and plaster pool walls will be dissolved into the water. If the Si is above +0.2, scaling and staining will occur. Use the chart below to determine the saturation index.

Si = pH + Ti + Ci + Ai - TDS

°C	°F	Ti	Hardness Calcium	Ci	Total alkalinity	Ai	Total Dissolved Solids	TDS
12	53	**0.3**	75	**1.5**	75	**1.9**	0-1000	**12.10**
16	60	**0.4**	100	**1.6**	100	**2.0**	1001-2000	**12.29**
			125	**1.7**	125	**2.1**		
19	66	**0.5**	150	**1.8**	150	**2.2**		
24	76	**0.6**	200	**1.9**	200	**2.3**	2001-3000	**12.35**
			250	**2.0**	250	**2.4**		
29	84	**0.7**	300	**2.1**	300	**2.5**	3001-4000	**12.41**
34	94	**0.8**	400	**2.2**	400	**2.6**		
			600	**2.4**	600	**2.8**		
39	102	**0.9**	800	**2.5**	800	**2.9**	4001-5000	**12.44**

Use: Measure the pH of the pool water, the temperature, water hardness, total alkalinity, and total dissolved solids. Use the table above to determine Ti, Ci, Ai, and TDS in the formula shown above. If the Si is equal to 0.2 or more, stains may appear. If the Si is equal to -0.2 or less, corrosion or deterioration may occur.

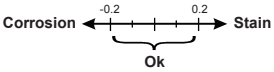

USE ONLY HAYWARD GENUINE REPLACEMENT PARTS

The pool's chemistry must be balanced BEFORE activating the AquaRite S3's. NOTE: If the pool does not have new water, add metal remover and non-copper based algaecide to the pool, per manufacturer's instructions. This ensures a quick, troublefree transfer to the AquaRite S3 system.

Salt

Use the chart on the following page to determine how much salt in pounds or (Kgs) should be added to reach the recommended levels. Use the Pool Sizing Formula below (measurements are in feet/gallons and meters/liters) if pool size is unknown.

	Gallons (pool size in feet)	**Liters** (pool size in meters)
Rectangular	Length x Width x Average Depth x 7.5	Length x Width x Average Depth x 1000
Round	Diameter x Diameter x Average Depth x 5.9	Diameter x Diameter x Average Depth x 785
Oval	Length x Width x Average Depth x 6.7	Length x Width x Average Depth x 893

The operating salt level is between 1200 PPM - 8000 PPM (parts per million) with 3200 PPM being optimal. If the water's salt concentration decreases, the AquaRite S3 will continue to operate down to 800 PPM in an alarmed state before shutting down.

Before adding any salt, first test the pool's salt level. Chlorine added to a pool over time can produce salt so this is especially important for retrofit installation to older pools. If the level is low, determine the number of gallons in the pool and add salt according to the chart below. The salt in your pool/spa is constantly recycled and the loss of salt throughout the swimming season should be minimal. This loss is due primarily to the addition of water because of splashing, backwashing, or draining (because of rain). Salt is not lost due to evaporation.

Type of Salt to Use

It is important to use only sodium chloride (NaCl) salt that is greater than 99.0% pure. This can be found at most pool stores in 40-80 lb. bags labeled "for use in swimming pools". Alternatively, use common food quality or water softener salt that is at least 99.0% pure. It is also acceptable to use water conditioning salt pellets, however, it will take longer for them to dissolve. Do not use rock salt, or salt with more than 1% of yellow prussiate of soda, salt with anti-caking additives, or iodized salt.

How to Add Salt

For new plaster pools, wait 10-14 days before adding salt to allow the plaster to cure. Turn the circulating pump on and add salt directly into the pool. Brush the salt around to speed up the dissolving process—do not allow salt to pile up on the bottom of the pool. Run the filter pump for 24 hours with the suction coming from the main drain (use pool vacuum if there is no main drain) to allow the salt to evenly disperse throughout the pool. The salt display may take 24 hours to respond to the change in salt concentration.

Always check stabilizer (cyanuric acid), when checking salt. These levels will most likely decline together. Use the chart on the following page to determine how much stabilizer must be added to raise the level to 40 ppm.

HAYWARD®

POUNDS and (Kg) OF SALT NEEDED FOR 3200 PPM

Current salt level ppm	Gallons and (Liters) of Pool/Spa water																
	8,000 (30,000)	10,000 (37,500)	12,000 (45000)	14,000 (52,500)	16,000 (60,000)	18,000 (67,500)	20,000 (75,000)	22,000 (82,500)	24,000 (90,000)	26,000 (97,500)	28,000 (105,000)	30,000 (112,500)	32,000 (120,000)	34,000 (127,500)	36,000 (135,000)	38,000 (142,500)	40,000 (150,000)
0	213 (97)	267 (121)	320 (145)	373 (170)	427 (194)	480 (218)	533 (242)	587 (267)	640 (291)	693 (315)	747 (339)	800 (364)	854 (388)	907 (412)	960 (436)	1013 (460)	1067 (484)
200	200 (91)	250 (114)	300 (136)	350 (159)	400 (182)	450 (205)	500 (227)	550 (250)	600 (273)	650 (295)	700 (318)	750 (341)	800 (363)	850 (385)	900 (408)	950 (430)	1000 (453)
400	187 (85)	233 (106)	280 (127)	327 (148)	373 (170)	420 (191)	467 (212)	513 (233)	560 (255)	607 (276)	653 (297)	700 (318)	747 (339)	793 (360)	840 (382)	887 (403)	933 (424)
600	173 (79)	217 (98)	260 (118)	303 (138)	347 (158)	390 (177)	433 (197)	477 (217)	520 (236)	563 (256)	607 (276)	650 (297)	693 (317)	737 (337)	780 (358)	823 (378)	867 (398)
800	160 (73)	200 (91)	240 (109)	280 (127)	320 (145)	360 (164)	400 (182)	440 (200)	480 (218)	520 (236)	560 (255)	600 (273)	640 (291)	680 (310)	720 (328)	760 (346)	800 (364)
1000	147 (67)	183 (83)	220 (100)	257 (117)	293 (133)	330 (150)	367 (167)	403 (183)	440 (200)	477 (217)	513 (233)	550 (250)	587 (267)	623 (283)	660 (300)	697 (317)	733 (333)
1200	133 (61)	167 (76)	200 (91)	233 (106)	267 (121)	300 (136)	333 (152)	367 (167)	400 (182)	433 (197)	467 (212)	500 (227)	533 (243)	567 (258)	600 (274)	633 (289)	667 (304)
1400	120 (55)	150 (68)	180 (82)	210 (95)	240 (109)	270 (123)	300 (136)	330 (150)	360 (164)	390 (177)	420 (191)	450 (205)	480 (218)	510 (232)	540 (246)	570 (259)	600 (263)
1600	107 (48)	133 (61)	160 (73)	187 (85)	213 (97)	240 (109)	267 (121)	293 (133)	320 (145)	347 (158)	373 (170)	400 (182)	427 (195)	453 (207)	480 (219)	507 (231)	533 (243)
1800	93 (42)	117 (53)	140 (64)	163 (74)	187 (85)	210 (95)	233 (106)	257 (117)	280 (127)	303 (138)	327 (148)	350 (159)	373 (169)	397 (180)	420 (190)	443 (201)	467 (211)
2000	80 (36)	100 (45)	120 (55)	140 (64)	160 (73)	180 (82)	200 (91)	220 (100)	240 (109)	260 (118)	280 (127)	300 (136)	320 (145)	340 (154)	360 (163)	380 (172)	400 (181)
2200	67 (30)	83 (38)	100 (45)	117 (53)	133 (61)	150 (68)	167 (76)	183 (83)	200 (91)	217 (98)	233 (106)	250 (114)	267 (121)	283 (129)	300 (137)	317 (144)	333 (152)
2400	53 (24)	67 (30)	80 (36)	93 (42)	107 (48)	120 (55)	133 (61)	147 (67)	160 (73)	173 (79)	187 (85)	200 (91)	213 (98)	227 (104)	240 (110)	253 (117)	267 (123)
2600	40 (18)	50 (23)	60 (27)	70 (32)	80 (36)	90 (41)	100 (45)	110 (50)	120 (55)	130 (59)	140 (64)	150 (68)	160 (73)	170 (77)	180 (81)	190 (86)	200 (90)
2800	27 (12)	33 (15)	40 (18)	47 (21)	53 (24)	60 (27)	67 (30)	73 (33)	80 (36)	87 (39)	93 (42)	100 (45)	107 (48)	113 (51)	120 (54)	127 (57)	133 (60)
3000	13 (6)	17 (8)	20 (9)	23 (11)	27 (12)	30 (14)	33 (15)	37 (17)	40 (18)	43 (20)	47 (21)	50 (23)	53 (24)	57 (26)	60 (27)	63 (29)	67 (30)
3200	Ideal	Ideal	Ideal	Ideal	Ideal	Ideal	Ideal	Ideal	Ideal	Ideal	Ideal	Ideal	Ideal	Ideal	Ideal	Ideal	Ideal
3400	OK	OK	OK	OK	OK	OK	OK	OK	OK	OK	OK	OK	OK	OK	OK	OK	OK
3600+	Dilute	Dilute	Dilute	Dilute	Dilute	Dilute	Dilute	Dilute	Dilute	Dilute	Dilute	Dilute	Dilute	Dilute	Dilute	Dilute	Dilute

POUNDS and (Kg) OF STABILIZER (CYANURIC ACID) NEEDED FOR 40 PPM

Current Stabilizer level (ppm)	Gallons and (Liters) of Pool Water																
	8,000 (30000)	10,000 (37500)	12,000 (45000)	14,000 (52500)	16,000 (60000)	18,000 (67500)	20,000 (75000)	22,000 (82500)	24,000 (90000)	26,000 (97500)	28,000 (105000)	30,000 (112500)	32,000 (82500)	34,000 (90000)	36,000 (97500)	38,000 (105000)	40,000 (112500)
0 ppm	2.7 (1.2)	3.4 (1.5)	4.0 (1.8)	4.7 (2.2)	5.4 (2.5)	6.0 (2.7)	6.7 (3.0)	7.4 (3.4)	8.0 (3.6)	8.7 (4.0)	9.4 (4.3)	10.0 (4.5)	10.8 (5.0)	11.4 (5.2)	12 (5.4)	12.7 (5.7)	13.4 (6)
10 ppm	2.0 (.9)	2.5 (1.1)	3.0 (1.4)	3.5 (1.6)	4.0 (1.8)	4.5 (2.0)	5.0 (2.3)	5.5 (2.5)	6.0 (2.7)	6.5 (3.0)	7.0 (3.2)	7.5 (3.4)	8 (3.6)	8.5 (3.8)	9 (4.0)	9.5 (4.3)	10 (4.6)
20 ppm	1.3 (.59)	1.7 (.77)	2.0 (.90)	2.3 (1.1)	2.7 (1.3)	3.0 (1.3)	3.3 (1.5)	3.7 (1.6)	4.0 (1.8)	4.3 (2.0)	4.6 (2.1)	4.9 (2.2)	5.4 (2.4)	5.7 (2.5)	6 (2.6)	6.3 (2.8)	6.6 (3.0)
30 ppm	0.7 (.31)	0.8 (.36)	1.0 (.45)	1.2 (.54)	1.4 (.64)	1.5 (.68)	1.7 (.77)	1.8 (.82)	2.0 (.91)	2.2 (.97)	2.4 (1.1)	2.6 (1.2)	2.8 (1.3)	2.9 (.1.3)	3.0 (1.4)	3.2 (1.4)	3.4 (1.5)
40 ppm	0.0	0.0	0.0	0.0	0.0	0.0	0.0	0.0	0.0	0.0	0.0	0.0	0.0	0.0	0.0	0.0	0.0

System Startup

Before Startup

Before starting the AquaRite S3 for the first time, be sure that the following items have been completed:

1. Pool/spa chemicals are within the recommended levels according to the table on page 18.
2. Pool/spa salt level is between 1200 PPM - 8000 PPM.
3. All wiring is performed according to NEC and local codes.
4. The AquaRite S3 is properly grounded.

Configuration

When all input and pool related wiring is complete, replace and secure the front panel. The AquaRite S3 can now be powered on for the first time. Apply power and wait for the AquaRite S3 to completely start. Because this is the first time that the AquaRite S3 has been powered on, it will bring you directly to the initial configuration screen. The AquaRite S3 uses a Configuration Wizard to assist in the configuration of the AquaRite S3. These screens will prompt you for specific information about your pool to help set up the operation of the AquaRite S3. Configuring the AquaRite S3 requires knowledge of all of the connected pool equipment (pool filter pump, heater, etc.).

Navigation and Configuration Wizard

Note that the AquaRite S3 uses 6 pushbuttons to navigate the menu and set values. The functions of these buttons are shown below.

(+) Use to increase a setting

(−) Use to decrease a setting

(OK) Use to make a selection or to enter Main Menu

(△) Use to navigate

(▽) Use to navigate

(↩) Use to return to previous screen

Language

The AquaRite S3 will support multiple languages. Select the desired language then touch the OK button to advance.

Time and Units

- *Format* - Set the desired clock format to a 12hr clock (AM/PM) or 24hr clock (military time). Use the "+" and "-" buttons to change this value.
- *Time* - Use the "+" and "-" buttons to change the value and the "UP" and "Down" buttons to move to the next selection. Set desired Hour, Minute and Seconds and when finished, press the "OK" button to save.
- *DST* - Select whether Daylight Savings Time is currently observed in your time zone.
- *Temp. Units* - Select whether Fahrenheit or Celsius units will be displayed.
- *Salinity Units* - Salt can be displayed in Parts Per Million (ppm) or Grams Per Liter (g/l). Make the desired selection.

After making all the selections on this screen, press the "OK" button to advance to the next screen.

Cell Selection

Your model AquaRite S3 has been shipped with its corresponding TurboCell. Select that model TurboCell that will be used and press "OK" to advance to the next screen.

USE ONLY HAYWARD GENUINE REPLACEMENT PARTS

Pump Scan

After selecting the TurboCell, the AquaRite S3 will look for a connected filter pump by scanning its communication connection. If a Smart Relay is found, it will configure operation for a single speed filter pump. If a VSP is found, it'll configure operation for a variable speed pump. If no device is found, it'll assume that the AquaRite S3 will not be controlling a filter pump and enable/disable chlorine generation based on the flow switch.

It's important that your VSP or Smart Relay be powered on during this discovery period. If the AquaRite S3 does not discover a connection, you can rescan the communication connection by pressing the "+" button. If the AquaRite S3 does not see your pump or Smart Relay, check for power at the device and make sure the low voltage communication connection is correct and secure.

Heater

Select whether a heater is connected to the AquaRite S3. Note that a heater requires the use of a water temperature sensor sold separately.

Air Temperature Sensor

Select whether you have an air temperature sensor connected to the AquaRite S3. An air temperature sensor is required for recirculation freeze protection.

Water Temperature Sensor

Select whether you have a water temperature sensor connected to the AquaRite S3. A water temperature sensor is required for heater control.

Firmware Upgrade

The AquaRite S3's firmware is the basic operating system that runs the unit. The AquaRite S3 was shipped with the version of firmware that was available at the time of release. There may be a newer version available and if so, we encourage you to upgrade. Also, if you have experienced problems, Hayward Technical Support may advise you to upgrade your AquaRite S3 firmware. To upgrade the AquaRite S3 firmware, prepare a FAT32 formatted USB thumbdrive. Make sure there are no files or folders on the drive. Always copy files directly to the root of the drive. Follow the procedure below.

1. Go to www.hayward.com, locate the AquaRite S3 product page and download the latest firmware version to your USB thumbdrive. Firmware is available separately for the unit's Display and Mainboard. Download both files.
2. Remove power to the AquaRite S3.
3. Remove front panel and locate USB connector shown on page 5.
4. Insert the USB thumbdrive into the USB port.
5. Apply power to the AquaRite S3.
6. At the home screen, press "OK" and navigate to "System settings" -> "Service settings" -> "Service Mode" -> "Firmware update". You'll see "Display" and "Mainboard". Update both separately, making sure to select the corresponding file on the thumbdrive.
7. After firmware has been updated, the AquaRite S3 will return to the home screen. Power down the unit and remove the thumbdrive. Replace the cover and power up the AquaRite S3. Configuration and operation settings should not be affected and the unit should resume normal operation.

Operation

Home Screen

After completing the initial configuration, the AquaRite S3 will begin normal operation and display the Home Screen. This is the default screen that is displayed continuously and offers important information regarding the AquaRite S3's operation. Refer to the diagram below to learn about the Home Screen.

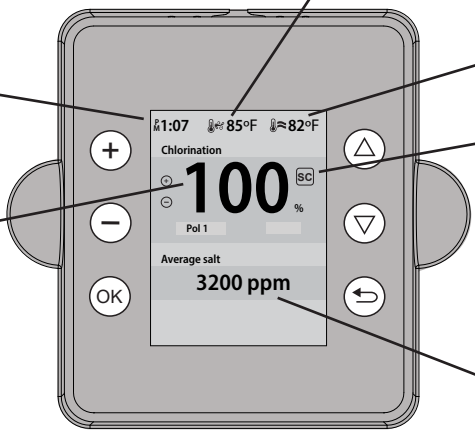

Air Temperature - requires the use of a Hayward temperature sensor

Current Time - if the AquaRite S3 controls the filter pump, the pump's schedule will reference this time

Water Temperature - requires the use of a Hayward temperature sensor

Super Chlorinate - displays when the AquaRite S3 is in superchlorinaton mode

Chlorination Setting - displays the current chlorination setting between 0 - 100%

Salt Reading - this reading displays the average salt level in the pool/spa

Quick Adjustments

The following adjustments can be made directly from the Home Screen.

Chlorination Setting

From the Home Screen, use the "+" and "-" buttons to adjust the desired chlorine level between 0% to 100%

Heater Temperature Setting

From the Home Screen, use the "UP" and "DOWN" buttons to adjust the desired heater setpoint from 34º to 104º.

Main Menu

Use the AquaRite S3's Main Menu to enable/disable functions, set schedules, turn on Super Chlorination and more. To enter the AquaRite S3's Main Menu, press "OK" at the Home Screen.

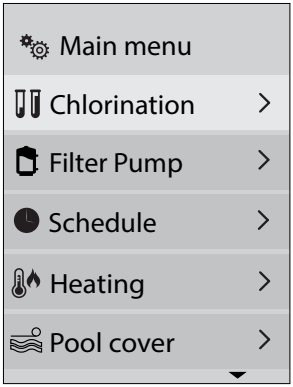

USE ONLY HAYWARD GENUINE REPLACEMENT PARTS

Chlorination Menu

The Chlorination menu allows you to enable/disable chlorination, set the desired level of chlorine from 0% to 100%, enable/disable Super Chlorination and view various diagnostic information. Note that you must press the “OK” button to save any selection or adjustment.

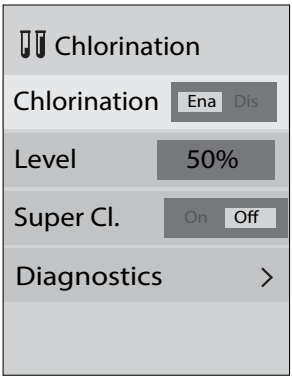

Chlorination

Use the “+” and “-” buttons to enable or disable chlorination. Press “OK” to save the selection.

Desired Level %

Use the “+” and “-” buttons to set a desired level of chlorine from 0% to 100%, then press “OK” to save. Note that the AquaRite S3 can only generate chlorine while the filter pump is running. For long pump run times, you may be able to set the desired level lower. For shorter run times, increasing the level may be necessary.

After the initial level setting and run time, you may need to raise the setting when the pool water temperature increases significantly, when there is higher than normal bather load or when your chlorinator cell ages. You may need to lower the setting when the pool water temperature decreases significantly or there are long periods of inactivity.

The production of chlorine is affected by the temperature at the TurboCell. Cold temperatures can decrease the amount of chlorine produced by the AquaRite S3. Extreme temperatures at the cell (high or low) can result in the AquaRite S3 shutting down chlorination. The table below shows the affects of temperature on the AquaRite S3’s chlorine output. Note that the temperature at the cell may be affected by the use of an upstream heater.

Temperature at TurboCell	Chlorine Output
greater than 140ºF	Shut off
60ºF - 140ºF	Desired Level %
50ºF - 59ºF	20% or Desired Level %, whichever is lower
less than 50ºF	Shut off

Super Cl.

When you have an unusually high bather load, a large amount of rain, a cloudy water condition, or any other condition that requires a large amount of chlorine to be introduced to the pool, enable the super chlorinate function and select the desired hours. If the AquaRite S3 controls the filter pump (either VSP or single speed using a Smart Relay), it will turn the pump on and set the chlorine generator to maximum output. The super chlorinate function will continue for the programmed time period overriding the normal filter pump schedule settings. At the end of the super chlorinate period, the pool will return to normal operation. If you manually turn off the filter pump, the super chlorinate function terminates.

If the AquaRite S3 does not control the pump, activating super chlorinate will only set the chlorinator to maximum output for the programmed time period. The chlorinator can only generate chlorine while the pump is running so be sure to run your pump continuously during this time. If the AquaRite S3 is turned off during the super chlorination period, it will not resume operation and return to the previous level settings.

The Diagnostics menu offers specific technical information about the AquaRite S3's operation. Values are shown in the following windows:

- **Cell Temperature** - this is the temperature inside of the cell and should be the same as the return water temperature after the heater.
- **Instant PPM** - this is the salt concentration in the cell read at that moment. Any changes to the pool's salt level will be seen instantly.
- **Average Salt** - this is the salt concentration averaged over a period of time.
- **Cell Current** - To generate chlorine, electrical current must flow through the cell. The actual current reading (amps) is displayed here. If this reading is 0A, chlorine is not being generated at that moment.
- **Cell Type** - this window shows the model cell that was selected during configuration.
- **Relay Pol.** - To prevent scaling and increase cell life, the AquaRite S3 switches polarity periodically. This window shows the polarity at that moment.
- **Cell Voltage** - This is the voltage that is being applied to the cell.

Filter pump Menu

If the AquaRite S3 discovers a VSP (variable speed pump) or Smart Relay (single speed pump) during configuration, it will add a Filter Pump menu to the Main Menu. The Filter Pump menu is the same for both pumps except that the menu will allow you to set a speed for the VSP. This setting doesn't exist for a single speed pump.

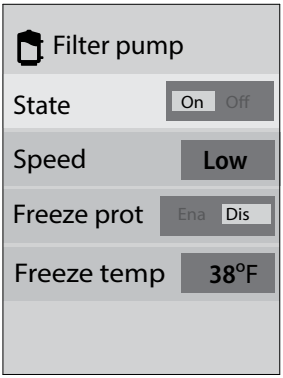

State
Use the "+" and "-" buttons to enable or disable the filter pump. Press "OK" to save the selection.

Speed (only shown for VSPs)
Use the "+" and "-" buttons to select LOW, MEDIUM and HIGH setting. Press "OK" to save the selection. To set the actual speeds for each setting, refer to the "Filter Pump" section on page 29.

Freeze prot (requires Air Temperature Sensor)
Use the "+" and "-" buttons to enable or disable the freeze protection. Enabling recirculation freeze protection will automatically turn the pump on when the air temperature drops below the "Freeze temp". If a VSP is used and recirculation freeze protection is enabled, the pump will run at the speed programmed in the "Filter Pump" section on page 29.

Freeze temp
Use the "+" and "-" buttons to raise and lower the freeze temperature. Press "OK" to save the selection. If freeze protection is enabled, the pool pump will automatically turn on when the outdoor air temperature falls below this temperature.

USE ONLY HAYWARD GENUINE REPLACEMENT PARTS

Schedule

When enabled, the AquaRite S3 can run up to 3 schedules per day. Each schedule can be programmed for a start time, end time and pump speed (VSPs only). When start time and end time are the same, the schedule will not run.

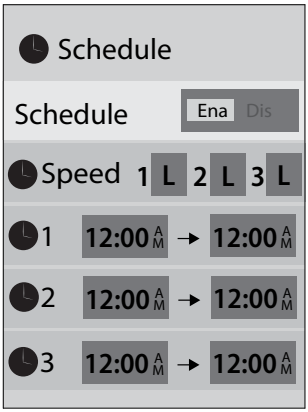

Schedule

Use the "+" and "-" buttons to enable or disable schedules. Press "OK" to save the selection.

Speed

Schedules are numbered 1-3. For each schedule, use the "+" and "-" buttons to change pump speed from L=Low, M=Medium, and H=High. Press the "UP" button to advance to the next schedule. Set speeds on all desired schedules and then press "OK". To set the actual speeds for Low, Medium and High settings, refer to the "Filter Pump" section on page 29.

Time

For each desired schedule, use the "+" and "-" buttons to change start time and end time. Press "Up" to advance to the next time setting. To prevent a schedule, set the start time and end time to the same value. When all scheduled times have been set, press "OK" to save. Programmed schedules will now automatically run.

Heating Menu (requires water temperature sensor)

Use the Heating menu to enable/disable the heater, set the temperature, and turn on/off the heater extend and heater cool down functions.

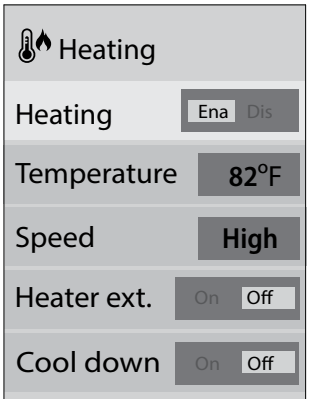

Heating

Use the "+" and "-" buttons to enable or disable the heater control. Press "OK" to save the selection.

Speed (only shown for VSPs)

Use the "+" and "-" buttons to select LOW, MEDIUM and HIGH setting. Press "OK" to save the selection. The is the minimum speed the pump will run while the heater is in use. This setting is useful to ensure that the heater receives a sufficient flow rate to operate regardless of schedule.

Temperature

Use the "+" and "-" buttons to raise and lower the desired heater setpoint. Press "OK" to save the selection.

Heater ext.

If enabled, the filter extend logic keeps the filter pump running beyond the normal turn-off time until the pool (or spa) is heated up to the desired temperature setting. Heater extend will NOT cause the filter pump to turn on, it will only delay the turn off time when the heater is operating. The filter pump must be controlled directly (VSP) or through a Smart Relay (single speed pump) to use heater extend.

Cool down
This feature ensures that the heater cools down before water circulation is stopped. When enabled, the AquaRite S3 will continue to run the filter pump for 5 minutes after the heater turns off regardless of the schedule.

Pool cover Menu

The Pool Cover menu allows you to enable/disable pool cover detection as well as change pump speed and reduce chlorination when the cover is on the pool. When the pool cover is closed, chlorine is not lost to sunlight and bacteria load is typically reduced, requiring less chlorine. Pool cover detection requires a normally open switch connection to the AquaRite S3. Refer to your pool cover instructions for compatibility information.

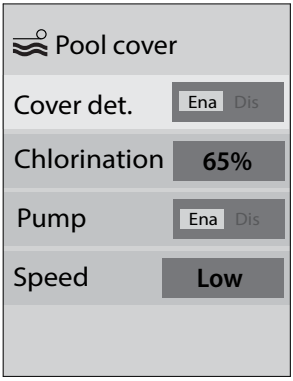

Cover det.
Use the "+" and "-" buttons to enable or disable pool cover detection. Press "OK" to save the selection.

Chlorination
This is the high limit of chlorine only when the cover is closed. Use the "+" and "-" buttons to set the desired level from 0% to 100%, then press "OK" to save. Note that the pump must be programmed to run (see below). When the cover is detected, the AquaRite S3 will produce up to, but no more than this setting.

Pump
Use the "+" and "-" buttons to enable or disable the pump while the cover is closed. Press "OK" to save the selection.

Speed (only shown for VSPs)
You can set a desired pump speed while the cover is closed. Use the "+" and "-" buttons to cycle through the available speeds, Low, Medium, High and Any.

System settings

The System Settings menu offers access to various operational settings that may have been setup during configuration. You can also access the Service mode which allows you to add new devices and reset previous settings/counters. A full description of System settings is listed below.

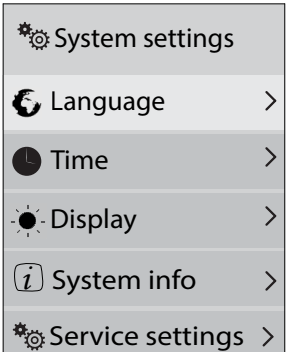

Language
Use the "+" and "-" buttons to scroll through three available languages; English, French and Spanish. Press "OK" to save the selection.

Time

The Time menu allows you to set the current time. All schedules will reference the set time.

- *Format* - choose the desired format using the "+" and "-" buttons. Choose 12 hour or 24 hour (military time), then press "OK" to save.
- *Time* - Use the "+" and "-" buttons to select hours, minutes, seconds and AM/PM. Press "OK" to save when finished.
- *DST* - The DST or Daylight Savings Time setting allows you to move the current time ahead or behind one hour without having to change the actual time. When DST is set to ON, the current time will move ahead one hour. When OFF, the current time will be displayed.

Display

Use this menu to change various display screen properties and units.

- *Brightness* - Choose the desired screen brightness from 0 - 100% using the "+" and "-" buttons. Press "OK" to save.
- *Sleep* - The AquaRite S3 can turn off its screen after a period of time if desired. Use the "+" and "-" buttons to select the time interval, then press "OK". If there are no button pressed during that time period, the display will turn off. The display will turn back on when any button is pressed. To keep the display on at all time, choose Always On.
- *Contrast* - Toggle between "High" and "Normal" screen contrast using the "+" and "-" buttons. Press "OK" to save.
- *Temp units* - Choose the desired temperature units, Fahrenheit or Celsius using the "+" and "-" buttons. Press "OK" to save.
- *Salinity units* - Choose the desired salinity units, g/l (grams per liter) or ppm (parts per million) using the "+" and "-" buttons. Press "OK" to save.

System info

The System info menu allows you to view current firmware versions. Newer firmware may be available from Hayward and if so, we encourage you to upgrade. Refer to the AquaRite S3's product page on the Hayward website for the latest firmware.

- *Display* - Selecting this displays the firmware version of the AquaRite S3's display.
- *Mainboard* - Selecting this displays the firmware version of the AquaRite S3's mainboard.

Service settings

Use this menu to add devices or change previously configured devices like the TurboCell, heater or VSP/Smart Relay. The Service mode also offers a way to reset cell.

- *Edit config* - Add or change the following configuration items:
    1. **Cell type** - Your model AquaRite S3 has been shipped with its corresponding TurboCell which should have been selected during configuration. If a mistake was made or if the TurboCell was replaced with a different model, make the selection here using the "UP" and "DOWN" buttons, then press "OK" to save.

    2. **Filter Pump -** For VSPs, set speeds for Low, Medium, High and Freeze Protection. These are the speeds that the pump will run for each setting. To set speeds:
        - Press "UP" or "DOWN" buttons to highlight the speed setting you'd like to change.
        - Press "+" or "-" change value. Use "UP" or "DOWN" buttons to change columns.
        - Press "OK" to save the new value.
        - Press "OK" to apply the new speed setting.

    3. **System config -** Enable/disable or change the following configuration items:

- *Remote* - Set mode to Master (default) or Remote (controlled by an Hayward Omni automation control). See “Remote Operation” below for more information.
- *Heating* - Use the “+” and “-” buttons to enable/disable the heater. Press “OK” to save.
- *Body of water* - Use the “+” and “-” buttons to toggle between pool and spa. Press “OK” to save.
- *Air temp.* - Use the “+” and “-” buttons to enable/disable the air temperature sensor. Press “OK” to save. The AquaRite S3 will display the air temperature and use it for recirculation freeze protection by turning on the pump when the air temperature drops below the freeze protection temperature which is set separately. Note that if freeze protection is currently enabled and then the air sensor is disabled, freeze protection will no longer activate.
- *Water temp.* - Use the “+” and “-” buttons to enable/disable the water temperature sensor. Press “OK” to save. The AQR S3 will display the water temperature when the filter pump is running and will be grayed out when the filter pump is not running. Note that a water temperature sensor is required for heater control.
- *Low salt alm (2700 ppm default, 1000 ppm min)* - when the salt level is lower than this adjustable value, the AquaRite S3 will show a warning. The selection can never be adjusted higher than 100 ppm under than the High salt alarm value.
- *High salt alm (3400 ppm default, 8000 ppm max)* - when the salt level is higher than this adjustable value, the AquaRite S3 will show a warning. The selection can never be adjusted lower than 100 ppm over the Low salt alarm value.

4. **Devices** - Use this selection to search for connected devices. If a VSP or Smart Relay is found, toggling it to “YES” will set the device to the Filter Pump. Any device found that is not a VSP or Smart Relay will be forced to “NO”.

- *Factory Reset settings* - Press “OK to reset previous settings. Confirm by pressing “OK” again, or cancel by going “BACK”. Note that all chlorination, pump and heat settings will be deleted. These settings will have to be reentered to resume proper function.
- *Reset cell* - Use this selection to reset TurboCell after cleaning or replacement.
- *Service mode* - View status of the following:
  1. **Chlorination** - view various parameters including cell temperature, cell type, relay polarity, cell current, cell voltage, chlorination setting. This screen will also allow you to manually change polarity, enable super chlorination and change the chlorination setting.
  2. **Sensors** - view the state and temperatures of all connected sensors.
  3. **Relays** - view the state of configured relays.
  4. **Pump** - view the pump status and pump speed.
  5. **Upgrade Firmware** - Refer to page 22 for information on this function.

Remote Operation

The AquaRite S3 can be configured to operate as a standalone chlorinator that is controlled by a Hayward Omni automation control or another AquaRite S3. In this configuration, the AquaRite S3 can only make chlorine and will have no other function. Chlorination settings and operation are managed by the Omni automation control or the Master AquaRite S3.

Setting up remote operation requires a communication connection between the RS-485 connectors of the two devices. Refer to the wiring diagrams below. After this link is made, "Remote Mode" must be enabled within the AquaRite S3's Main Menu as described on the following page.

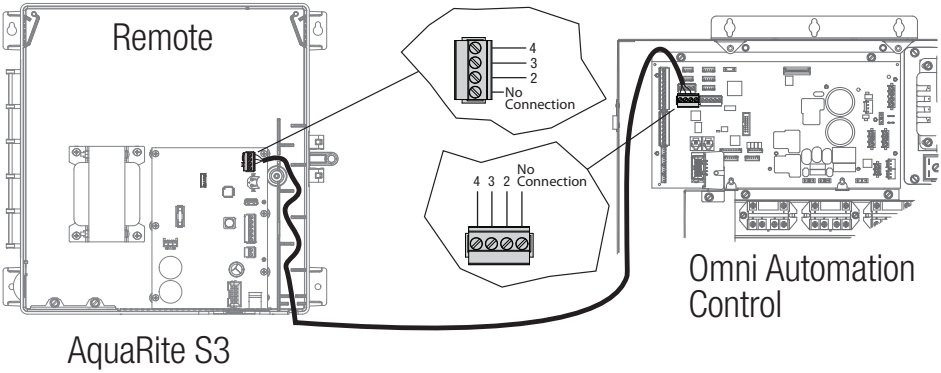

CAUTION: Remove power from all equipment before wiring.

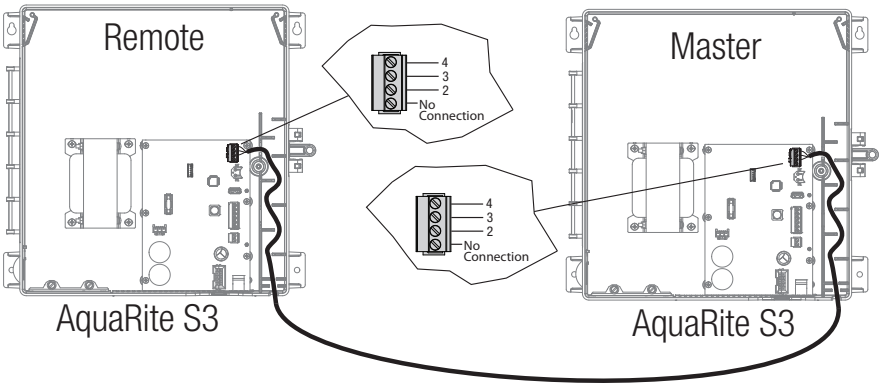

CAUTION: Remove power from all equipment before wiring.

Enable Remote Mode

At the Main Menu, use the following path System Settings -> Service Settings - > Edit Config - -> System Config. You'll arrive at the screen below. Highlight "Control"and then press the "+" button to switch to "Remote Mode".

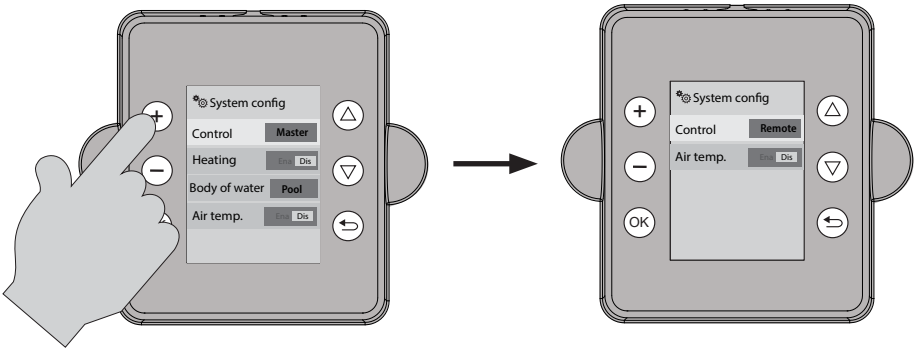

After switching into Remote mode or returning back to Master mode, it is always recommended to restart the AquaRite S3. To restart, remove power, wait for the display to turn off completely, then reapply power. This will ensure that the AquaRite S3 confirms the status of a communication link with the automation control.

When connected to Omni automation control: When the AquaRite S3 is in Remote mode, any connected devices will be controlled by the Omni automation control. There is no need to rewire this equipment to the control if it's already connected to the AquaRite S3. Sensors, heaters, pumps and smart relays that are connected to the AquaRite S3 will all be controlled by the Omni automation control. To configure the Omni control to operate with the AquaRite S3 in Remote mode, refer to the Configuration Wizard and Quick Edit sections of you Omni control's Installation manual. From here, you can add the chlorinator and any other devices that are connected to the AquaRite S3.

When connected to a Master AquaRite S3: When the AquaRite S3 is in Remote mode, any connected devices will NOT be controlled by the Master AquaRite S3. Sensors, heaters, pumps and smart relays will not be detected or used.

With either configuration, the remote AquaRite S3 must have a connected flow switch and will not produce chlorine unless there is adequate flow.

An AquaRite S3 in Master mode can also control a Hayward AquaRite AQR chlorinator using an HLAQRPCB communication board. Wire the RS-485 from the Master AquaRite S3 to the RS-485 on the communication board in the same manner as the diagrams on the previous page. Refer to the HLAQRPCB instructions for more detail.

Maintenance

Servicing and Cleaning the TurboCell

Turn off power to the AquaRite S3 before removing the electrolytic cell. Once removed, look inside the cell and inspect for scale formation (light colored crusty or flaky deposits) on the plates and for any debris which has passed through the filter and caught on the plates. If no deposits are visible, reinstall. If deposits are seen, use a high pressure garden hose and try to flush the scale off. If this is not successful, use a plastic or wood tool (do not use metal as this will scratch the coating off the plates) and scrape deposits off of plates. Note that a buildup on the cell indicates that there is an unusually high calcium level in the pool (old pool water is usually the cause). If this is not corrected, you may to have to periodically clean the cell. The simplest way to avoid this is to bring the pool chemistry to the recommended levels as specified.

Mild Acid Washing: Use only in severe cases where flushing and scraping will not remove the majority of deposits. To acid wash, turn off power to AquaRite S3. Remove cell from piping. In a clean plastic container, mix a 4:1 solution of water to muriatic acid (one gallon of water to one quart of muriatic acid). ALWAYS ADD ACID TO WATER - NEVER ADD WATER TO ACID. Be sure to wear rubber gloves and appropriate eye protection. The level of the solution in the container should just reach the top of the cell so that the wire harness compartment is NOT submerged. It may be helpful to coil the wiring before immersing the cell. The cell should soak for a few minutes and then rinse with a high pressure garden hose. If any deposits are still visible, repeat soaking and rinsing. Replace cell and inspect again periodically.

Winterization

The AquaRite S3 electrolytic cell and flow detection switch will be damaged by freezing water just as your pool plumbing would. In areas of the country which experience severe or extended periods of freezing temperatures, be sure to drain all water from the pump, filter, and supply and return lines before any freezing conditions occur. The electronic control is capable of withstanding any winter weather and should not be removed.

Chlorine Production

Cell Model	lbs per day
TCELLS340	1.47
TCELLS325	.98
TCELLS318	.73
TCELLS315	.53

Replacement Parts

Replacement Parts	
PART NUMBER	**DESCRIPTION**
GLXS3HANDLE	Replacement Handle with Coupler Link
GLXS3PCB	Replacement S3 PCB with Cable and Hardware
GLXS3FUSE	All Fuses
GLXS3DISPLAY	Replacement Display with Display Cable
GLXS3RELAY	Relay with Cable and Hardware
GLXS3PLXFMR	Replacement Transformer with Hardware
GLX-PC-12-KIT	Replacement Temperature Sensor with Hose Clamp
GLX-FLO-RP	Replacement Flow Switch
GLX-CELL-UNION	PVC Cell Unions
GLX-FLO-T	PVC Flow Switch T Fitting
GLX-FLOW-RP-25	Flow Switch with 25 ft Cable
GLX-CELLSTAND	Cell Cleaning Stand
GLX-CELL-PIPE	PVC Pipe Placeholder
TCELLS315	TurboCell 15k Gallon
TCELLS318	TurboCell 18k Gallon
TCELLS325	TurboCell 25k Gallon
TCELLS340	TurboCell 40k Gallon
TCELLS340X25	TurboCell 40k Gallon with 25 ft Cable

HAYWARD®

LIMITED WARRANTY (effective 03/01/12) Hayward warrants its OmniLogic, OmniPL, Pro Logic, OnCommand and E-Command pool automation products as well as its AquaRite, AquaRite Pro, AquaPlus and SwimPure chlorination products to be free of defects in materials and workmanship, under normal use and service, for a period of three (3) years. Hayward also warrants its Aqua Trol chlorination products to be free of defects in materials and workmanship, under normal use and service for a period of one (1) year. These warranties are applicable from the initial date of purchase on private residential swimming pools in the US and Canada. Installations of product for use on commercial pools in the US and Canada is covered for a period of one (1) year for defects in materials and workmanship. Hayward warrants all accessories and replacement parts for the above-identified pool automation and chlorination products for a period of one (1) year. Accessories also include remotes, actuators, base stations, temperature sensors, flow switches and chemistry probes. Each of these warranties is not transferable and applies only to the original owner.

Hayward shall not be responsible for cartage, removal, repair or installation labor or any other such costs incurred in obtaining warranty replacements or repair.

Proof of purchase is required for warranty service. If written proof of purchase is not provided, the manufacturing date code will be the sole determinant of the date of installation of the product. To obtain warranty service or repair, please contact the place of purchase or the nearest Hayward authorized warranty service center. For more information on authorized service centers please contact the Hayward Technical Service Support Center (Phone: (908) 355-7995) or visit the Hayward website at www.hayward.com.

WARRANTY EXCLUSIONS:

1. Material supplied or workmanship performed by others in process of installation.

2. Damage resulting from improper installation including installation on pools larger than the product rating.

3. Problems resulting from failure to install, operate or maintain the product(s) in accordance with the recommendations contained in the owners manual(s).

4. Problems resulting from failure to maintain pool water chemistry in accordance with the recommendations in the owners manual(s).

5. Problems resulting from tampering, accident, abuse, negligence, unauthorized repairs or alternations, fire, flood, lightning, freezing, external water, degradation of natural stone used in or immediately adjacent to a pool or spa, war or acts of God.

6. Use of a non-genuine Hayward replacement salt chlorination cell on any Hayward automation or chlorination product will void the warranty for that product.

The express limited warranty above constitutes the entire warranty of Hayward Pool Products with respect to its products and is in lieu of all other warranties expressed or implied, including warranties of merchantability or fitness for a particular purpose. In no event shall Hayward Pool products be responsible for any consequential, special or incidental damages of any nature. Some states do not allow a limitation on how long an implied warranty lasts, or the exclusion of incidental or consequential damages, so the above limitation may not apply to you. This warranty gives you specific legal rights, and you may also have other rights, which vary from state to state.

For further information or consumer
technical support, visit our website at
www.hayward.com
US: 908-355-7995

HAYWARD®

Hayward is a registered trademark and AquaRite
is a trademark of Hayward Industries, Inc. © 2026 Hayward Industries, Inc.

All other trademarks not owned by Hayward are the property of their respective owners. Hayward is not in any way affiliated with or endorsed by those third parties. For patent information, refer to www.hayward.com/patents.