Jandy®

A WHOLE NEW SPECTRUM OF CLEAN

The most advanced way to keep pool water clean,
AOP is convenient and uses less chlorine

X- SERIES 200

X-SERIES 500

X-SERIES 350

OFFICIAL POOL EQUIPMENT SUPPLIER

USA SWIMMING

X SERIES™
AOP

THE MOST ADVANCED WAY TO KEEP POOL WATER CLEAN

Your water will never be cleaner than when you add AOP to your pool. Combining the powerful technologies of UV-C and Ozone, Jandy X-Series AOP Systems, powered by DEL® technology, offer superior oxidation to rid your pool of what chlorine alone can't.

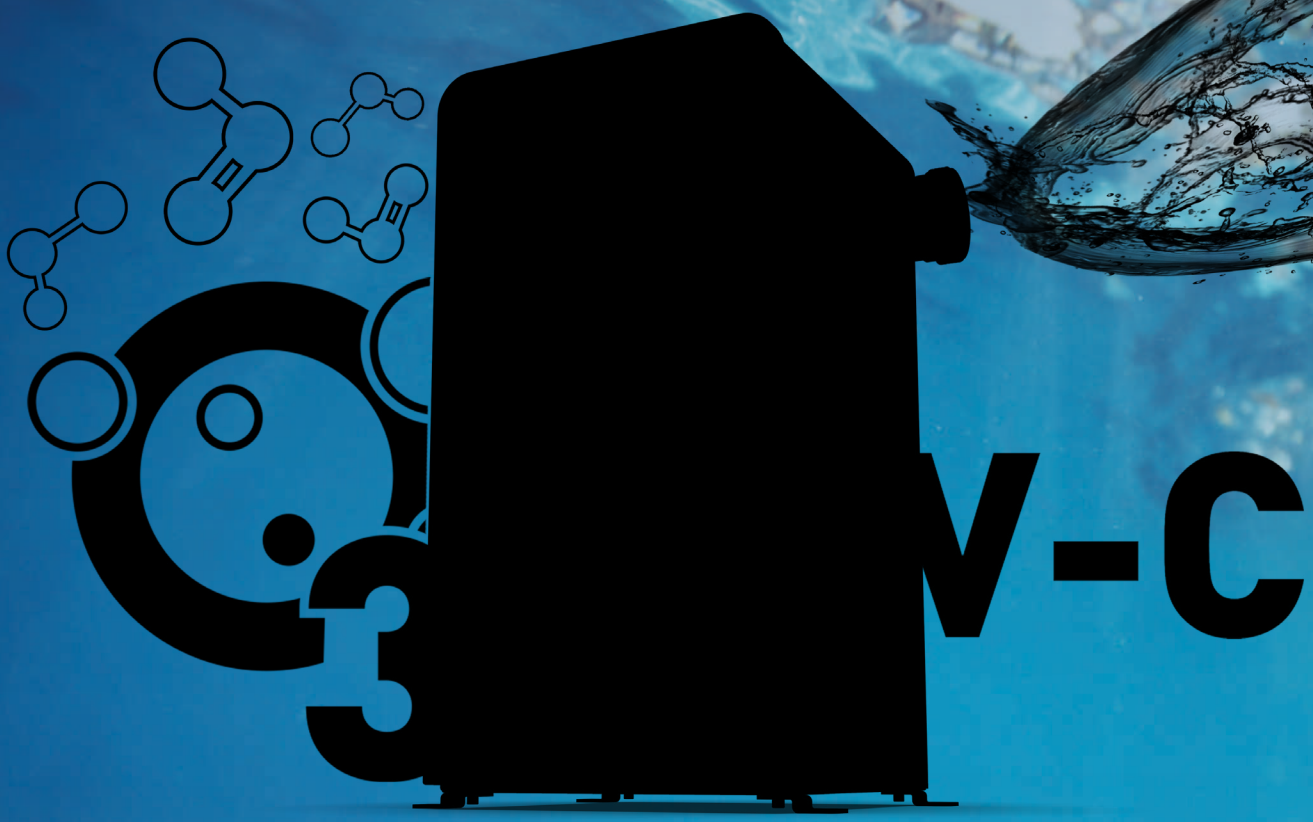

Water Doesn't Get Cleaner Than This

Combines the most effective water quality technologies to create the most advanced cleaning agent for your pool*

*Product has met the requirements of NSF/ANSI/CAN 50, Supplemental Disinfection Efficacy of 3-log (99.9%) or greater reduction of Enterococcus faecium and Pseudomonas aeruginosa.

More Oxidation Power

By utilizing Corona discharge modules to generate ozone, Jandy X-Series models put far more cleaning power behind keeping your pool clean with as much as 22 times** the oxidation of competitor brands.

JANDY® X-SERIES AOP 500

JANDY X-SERIES AOP 350

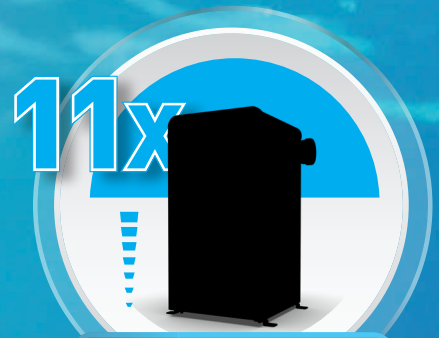

JANDY X-SERIES AOP 200

**Comparison of ozone output in mg/h (test carried out using measuring tools calibrated by an external 3rd party lab). The difference comes from the technologies used as Corona discharge generators typically generate from 1.0 to 4.5% w/w vs. 0.001 to 0.1% w/w with UV ozone generators. Source: "Chemistries of Ozone for Pool and Spa Water Treatment, Facts and Fallacies" from G. Rice, Ph.D., originally published in the Journal of the Swimming Pool and Spa Industry, Volume 1, Number 1, pages 25-44. Copyright © 1995 by JSPSI.

Swim Carefree

Gets rid of what chlorine alone can't for water that's cleaner and healthier for swimming

A Better Experience For Everyone

Say goodbye to red eyes, damaged hair, itchy skin and smelly pools — AOP delivers water that's not just cleaner it's more comfortable

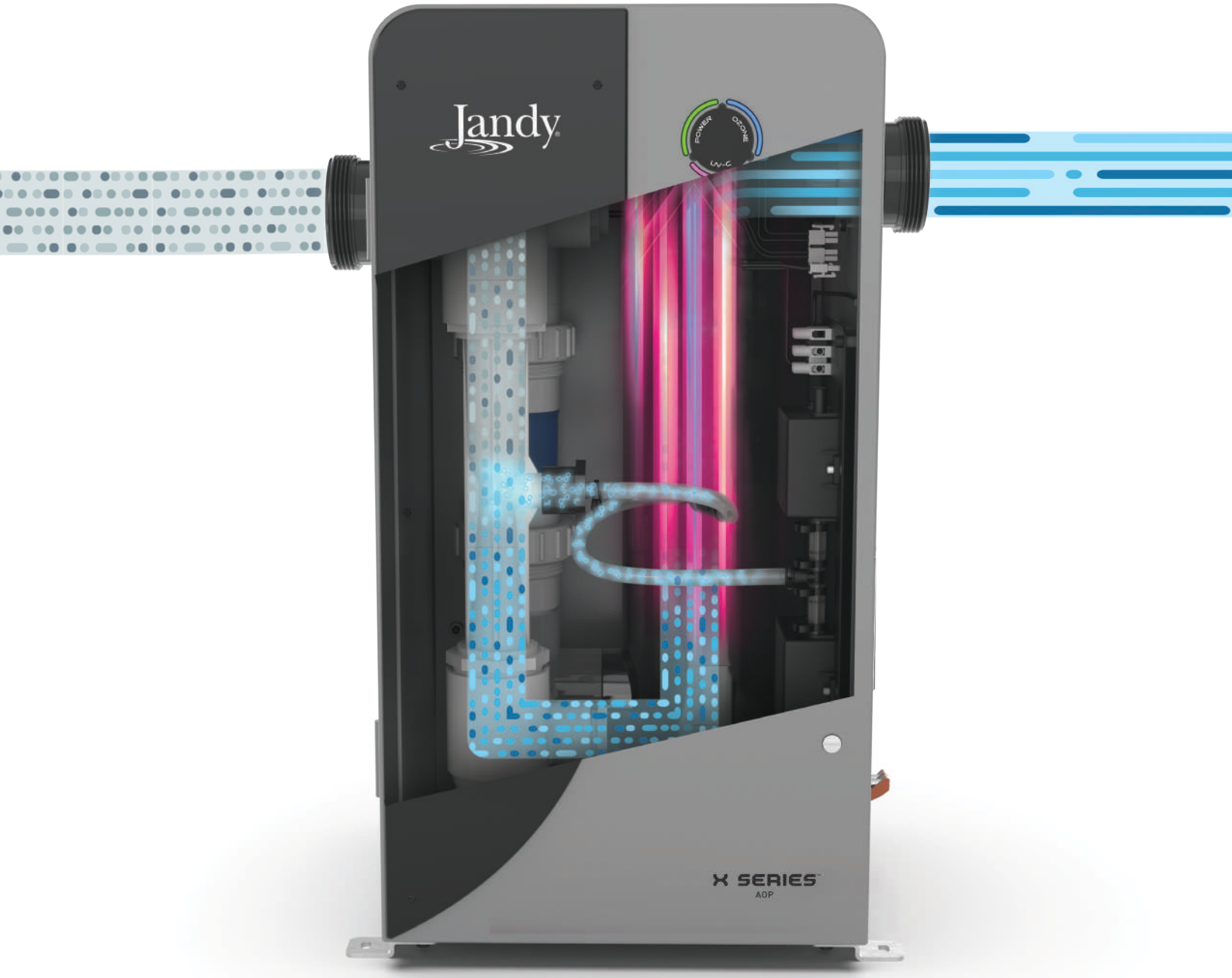

Work Less. Play More.

Spend more time enjoying your pool, and less time doing maintenance

Creates Crystal Clear Water

AOP oxidizes contaminants in the water so they can be filtered out better

*Product has met the requirements of NSF/ANSI/CAN 50, Supplemental Disinfection Efficacy of 3-log (99.9%) or greater reduction of Enterococcus faecium and Pseudomonas aeruginosa.

Quick and Easy Install

Blink and you might miss it... With just the twist of two unions and three wires, you're done!

Simplifies Pool Maintenance

Fewer chemicals means less time balancing levels

NSF®

CCS #16534

NSF Certified

True NSF 50 Certification to eradicate 99.9% of influent bacteria*

*NSF certification applies to in-line models only

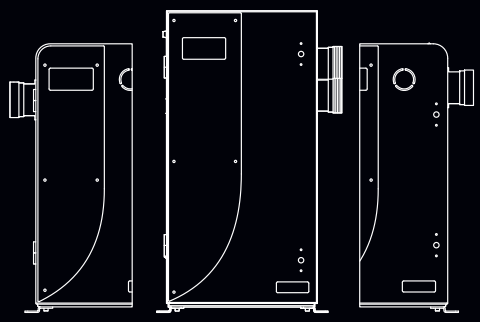

The Right Fit

Three options to suit any size pool

Off-line model available, not pictured here

SPECIFICATIONS

	Jandy® AOP X200	Jandy AOP X350	Jandy AOP X500
Part Number	JAOPX200	JAOPX350	JAOPX500
Mains Supply	110/240 VAC 50/60Hz, 1ϕ, 0.9 A	110/240 VAC 50/60Hz, 1ϕ, 1.1 A	240 VAC 60Hz, 1ϕt, 0.6 A
Wattage	99 W (110V), 216 W (240V)	121 W (110V), 264 W (240V)	144 W (240V)
Plumbing	Inlet & Outlet 2" PVC unions	Inlet & Outlet 2" PVC unions	Inlet & Outlet 2" PVC unions
Flow Rate (NSF certified)	30 GPM	40 GPM	50 GPM
Max Pool Volume	25,000 gal	40,000 gal	50,000 gal
Mounting	Floor (Florida Building Code Wind Force Category 1 Compliant)		
Enclosure	CSA/NEMA 3 | Indoor/Outdoor Installation		
Dimensions	24.3"H x 12.5"W x 13.4"D	24.3"H x 12.5"W x 13.4"D	28"H x 17"W x 10.5"D
Weight (Shipping)	54 lb.	54 lb.	55 lb.
UV-C Lamp	Low pressure / 16 000 h / High output UV-C		
UV Wavelength	254 nm	254 nm	254 nm
Ozone Cells	1 Corona discharge cell	2 Corona discharge cells	3 Corona discharge cells
Ozone Output	200 mg/h	350 mg/h	500 mg/h
Certifications	NSF/ANSI/CAN Standard 50 supplemental sanitizer - CCS#16534 | UL listed US & Canada		
MDV Unit*		MDV XL In-Line (P/N=JMDVIN)	

*MDV (Mixing Degas Vessel) is required for indoor & covered pools, optional for others

DIMENSIONS

Jandy X-Series AOP 200 / 350

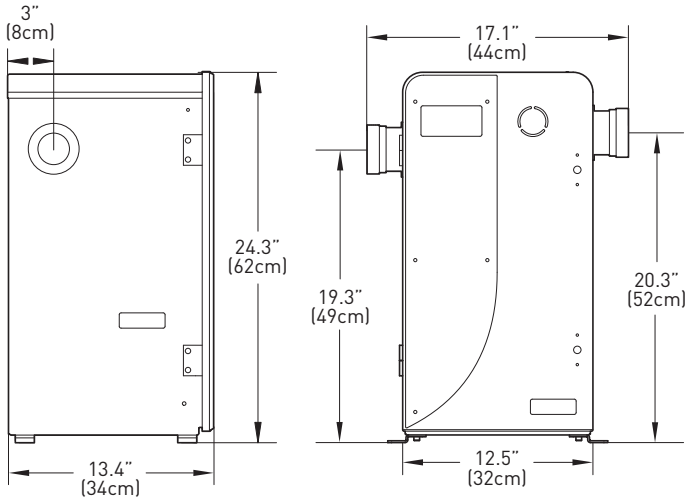

Jandy X-Series AOP 500

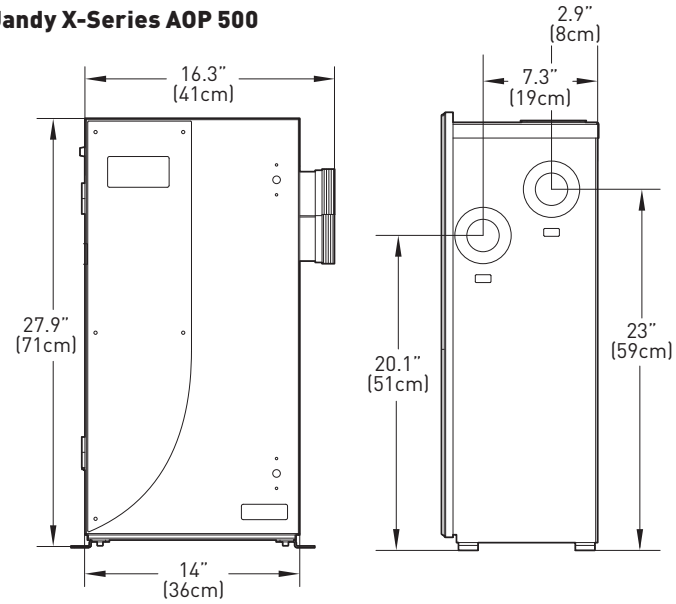

SUGGESTED SANITIZERS TO PAIR WITH JANDY X-SERIES AOP

Model	Part Number	Pool Volumes (Up To)
AquaPure Salt Chlorinator + PureLink Cell Kit*	APUREM + PLC700	12,000 gal
AquaPure Salt Chlorinator + PureLink Cell Kit*	APUREM + PLC1400	40,000 gal
TruClear Salt Chlorinator, 2-Port Cell	TRUCLEAR11K	35,000 gal
TruClear Salt Chlorinator, 2–2 1/2" Universal Unions, 2-Port Cell	TRUCLEAR11KU	35,000 gal
TruClear XL Salt Chlorinator (Power Center + Cell)	TRUCLEARPS + TRUCLEARXL	45,000 gal
TruChlor Erosion Feeder, In-Line, Clear Glass Lid	TCLINCG	50,000 gal
TruChlor Erosion Feeder, In-Line Variable Speed, Clear Glass Lid	TCLVSCG	50,000 gal
TruChlor Erosion Feeder, Off-Line, Base, 2" Clamp, Clear Glass Lid	TCLOFFCGB20	50,000 gal

* Or only the PureLink cell Kit if the pool is equipped with a Jandy PureLink automation power center.

TRADE SERIES EXCLUSIVE

03438_SL

©2025 Fluidra. All rights reserved. The trademarks and trade names used herein are the property of their respective owners. 03438_SL