Job Name/Location: **Tag No:**

Date:

PO No.:

For: ☐ File ☐ Resubmit ☐ Approval ☐ Other _____

Architect: **GC:**

Engr: **Mech:**

Rep:
(Company) (Project Manager)

APHWC801M

80 Gal. High-Efficiency Electric Heat Pump Water Heater

LG Life's Good

Features:

- Square-shaped heat pump water heater with inverter technology in a silver finish.
- Anode rod and enamel-coating in water tank assists in preventing corrosion, and helps promote longer water tank life.
- Self-diagnosis function using LG ThinQ
- Simple control with digital display includes four (4) buttons: Mode, Set, Up, and Down.
- Built-in LG ThinQ™ Wi-Fi (download app) allows for operation mode (Auto, Heat Pump, Turbo, Vacation, Schedule) temperature settings, and monitoring of hot water temperature.
- Two (2) separate heat sources — heat pump plus two (2) heating elements — enable back-up operation if one component fails.
- Water temperature sensor monitors water draw and helps to optimize operation.

Modes:

- Auto
- Turbo
- Heat Pump
- Vacation

Performance:

Nominal Capacity (gal.)	80
Rated Storage Volume (gal.)	72
FHR (gal.)	94
Recovery 90° Rise (gal./hour)	22.7
Annual Energy Consumption (kW/h)	1272
UEF	3.9

FHR = First Hour Rating UEF = Uniform Energy Factory

Electrical:

Power Supply (V / Hz / Ø)[1,2]	208-240 / 60 / 1
MOP (A)	30.0
MCA (A)	30.1
Heater Rated Amps (240V) (A)	20.8
Compressor Rated Amps (A)	1.5
Compressor Rated Load Amps (RLA) (208V / 240V)	3.3 / 3.1
Compressor Rated Power Input (W)	376
Fan Motor Output (W)	43
Fan Full Load Amps (FLA)	0.22
Upper Element Wattage (kW) 208V / 240V	3.8 / 5
Lower Element Wattage (kW) 208V / 240V	3.8 / 5

MOP - Maximum Overcurrent Protection MCA - Minimum Circuit Ampacity

Water System:

Maximum Working Pressure (Water Tank) (psi)	150
Design Pressure System (High Side)	290
Design Pressure System (Low Side)	130.5
Water Connection Location	Side
Water Connection Size (in.)	3/4 Female or Male Pipe Thread
Drain Hose Size (I.D.)	3/4, 1/2 Male or Female Pipe Thread

Accessory:

☐ Duct Adapter — PHDCLA0

Operating Conditions:

Heating (°F)	23 to 120

Unit Data:

Refrigerant Type	R134A
Refrigerant Charge (oz.)	26
Refrigerant Control	Electronic Expansion Valve (EEV)
Compressor Type	Twin Rotary
Rated Air Flow Rate (CFM)	155.4
Hot Water Setpoint Range (°F)	95 to 140
Sound Pressure Level[3] (Auto) dB(A)±3	42
Sound Pressure Level[3] (Turbo) dB(A)±3	45
Insulation	Foam, 1.6 ~ 2.4 in.
Net Dimensions (W x H x D, in.)	22-27/32 X 79-1/16 X 22-29/32
Shipping Dimensions (W x H x D, in.)	29-1/16 X 84-31/32 X 27-5/32
Net Weight (lbs.)	262
Shipping Weight (lbs.)	304

Heat Pump Fan:

Type	Propeller
Quantity	1
Motor/Drive	Brushless Digitally Controlled/Direct

Notes:

1. Acceptable operating voltage: 176V ~ 276V.
2. Power wiring size must comply with the applicable local and national codes.
3. Sound pressure levels are tested in an anechoic chamber under Northern Climate Specification (NEEA) Version 6.0 Appendix D: Sound Pressure Measurement Test Method.
4. Must follow installation instructions in the applicable LG installation manual.

ENERGY STAR

Electric

C US

U.S. GREEN BUILDING COUNCIL MEMBER

AHRI CERTIFIED® www.ahridirectory.org Residential Water Heaters DOE 10 CFR Part 430

For a complete list of available accessories, contact your LG representative.
For continual product development, LG reserves the right to change specifications without notice.
© LG Electronics U.S.A., Inc., Englewood Cliffs, NJ. All rights reserved. "LG Life's Good" is a registered trademark of LG Corp. /www.lghvac.com

Job Name/Location:_____

APHWC801M

80 Gal. High-Efficiency Electric Heat Pump Water Heater

Tag No.: _____

Date: _____

PO No.: _____

Unit: Inch (mm)

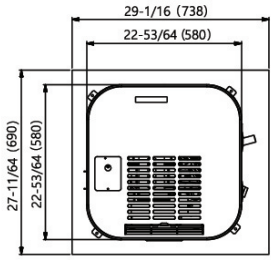

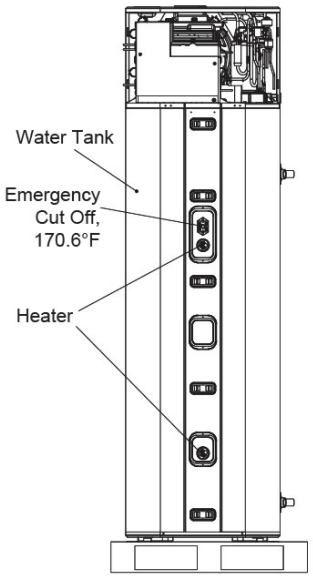

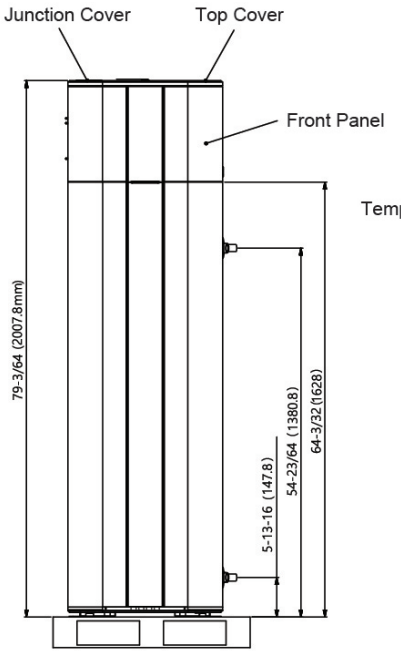

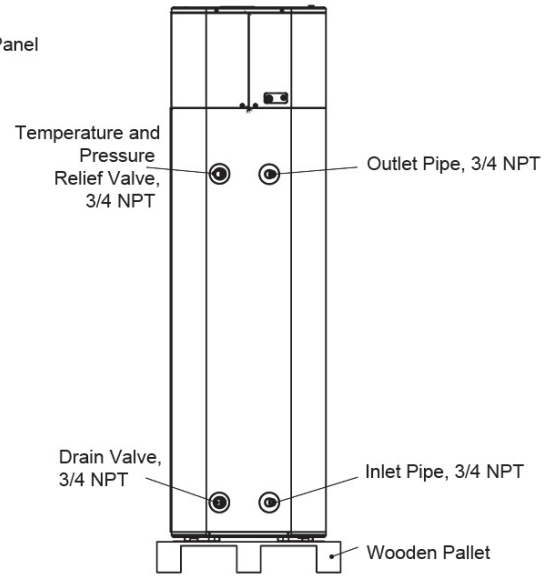

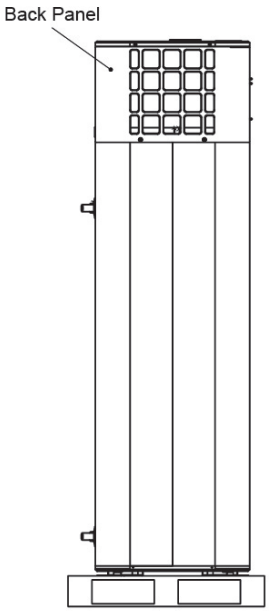

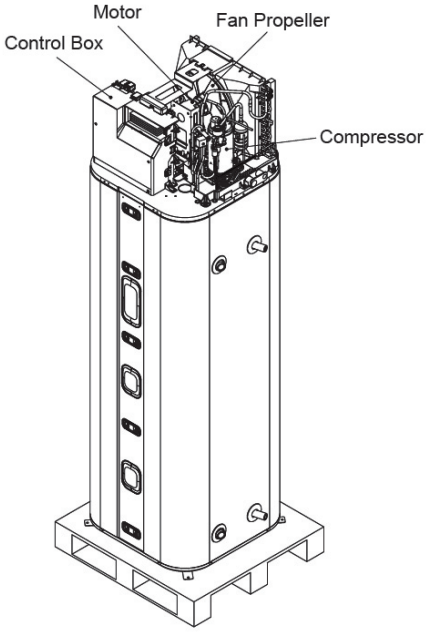

For continual product development, LG reserves the right to change specifications without notice.
© LG Electronics U.S.A., Inc., Englewood Cliffs, NJ. All rights reserved. "LG Life's Good" is a registered trademark of LG Corp. /www.lghvac.com