Job Name/Location: **Tag #:**

Date:

For: ☐ File ☐ Resubmit ☐ Approval ☐ Other_____

PO No.:

Architect: GC:

Engr: Mech:

Rep:

(Company) (Project Manager)

KNMKB121A

Multi F R32 Low Static Ducted Indoor Unit

12,000 Btu/h

Performance:

Nominal Cooling Capacity (Btu/h)	12,000
Nominal Heating Capacity (Btu/h)	13,800

Cooling Nominal Test Conditions:
Indoor: 80°F DB / 67°F WB
Outdoor: 95°F DB / 75°F WB

Heating Nominal Test Conditions:
Indoor: 70°F DB / 60°F WB
Outdoor: 47°F DB / 43°F WB

Electrical:

Power Supply (V/Hz/Ø)[1,2]	208-230/60/1
Rated Amps (A)	0.8

Piping:

Installed Liquid Pipe (in., O.D.)	ø1/4
Installed Vapor Pipe (in., O.D.)	ø3/8
Liquid Connection (in., O.D.)	ø1/4
Vapor Connection (in., O.D.)	ø3/8
Drain (in., O.D. / I.D.)	1-1/4 / 1
Temperature Sensor	Thermistor

Controls Features:

- Inverter (variable speed fan)
- Long-life washable prefilter
- Hot start
- Self diagnosis
- Soft dry operation
- Auto operation
- Auto restart
- Sleep mode
- Timer (on/off/weekly)
- Drain pump
- ESP control
- R32 leak detection sensor

Optional Accessories:

☐ Single-Port Shutoff Valve - PRHPZ010A
☐ Auxiliary Heater Kit - PRARH1

Controller Options:

☐ MultiSITE™ CRC* Controllers
☐ Simple Remote Controllers
☐ Standard III Remote Controllers
☐ Deluxe Remote Controller
☐ Remote Temperature Button Sensor
☐ Dry Contacts
☐ Wi-Fi Module - PWFMDD200

Entering Mixed Air:

Cooling (°F WB)	57 ~ 77
Heating (°F DB)	59 ~ 81

Unit Data:

Refrigerant Type	R32
Refrigerant Control	EEV
Sound Pressure (H/M/L) dB(A)[3]	31 / 28 / 27
Primary Filter	Washable Pre-filter
Net Weight (lbs.)	45.4
Shipping Weight (lbs.)	55.2

Fan:

Type	Sirocco
Quantity	2
Motor/Drive	Brushless Digitally Controlled/Direct
Air Flow H/M/L (CFM)	**353 / 300 / 247**
External Static Pressure[4,5] (in wg)	0.10
Minimum External Static Pressure	0.00
Maximum External Static Pressure	0.20
Dehumidification (pts./hr.)	1.86

Notes:

1. Acceptable operating voltage: 187V-253V.
2. The power wiring and the communication wiring from the outdoor unit to the indoor unit, or from the branch distribution unit to the indoor unit is field supplied and must be stranded, shielded or unshielded (if shielded, it must be grounded to the chassis of the outdoor unit only). All wiring must comply with applicable local and national codes.
   a. Power wiring and communication wiring from outdoor unit to indoor unit (No. x AWG) 3 x 14 / 2 x 18.
   b. Power wiring and communication wiring from branch distribution unit to indoor unit (No. x AWG) 3 x 14 / 2 x 18.
3. Sound Pressure levels are tested in an anechoic chamber under ISO Standard 3745.
4. Adjust fan speed to correct for static pressure increases when using field-supplied air filter.
5. At factory fan speed setting.
6. See Engineering Manual for sensible and latent capacities.
7. The indoor unit comes with a dry helium charge.
8. Corresponding refrigerant piping length is in accordance with standard length of each outdoor unit and the level difference is 0 ft. All capacities are net with a combination ratio between 95 - 105%.
9. Must follow installation instructions in the applicable LG installation manual.

AHRI CERTIFIED® www.ahridirectory.org
Unitary Small HP
AHRI Standard 210/240
Certification applies only when the complete system is listed with AHRI.

For a complete list of available accessories, contact your LG representative.
For continual product development, LG reserves the right to change specifications without notice.
© LG Electronics U.S.A., Inc., Englewood Cliffs, NJ. All rights reserved. "LG Life's Good" is a registered trademark of LG Corp. /www.lghvac.com

Job Name/Location: _____

KNMKB121A

Multi F R32 Low Static Ducted Indoor Unit

12,000 Btu/h

Tag No.: _____

Date: _____

PO No.: _____

(unit: inch)

Model Number	A	B	C	D
KNMKB091A	30-15/32	27-9/16	28-27/32	25-31/32
KNMKB121A KNMKB181A	38-11/32	35-7/16	36-23/32	33-27/32

(unit : inch)

Number	Name	Description
1	Liquid pipe connection	
2	Gas pipe connection	
3	Drain pipe connection	
4	Power supply connection	
5	Air discharge	
6	Air suction	

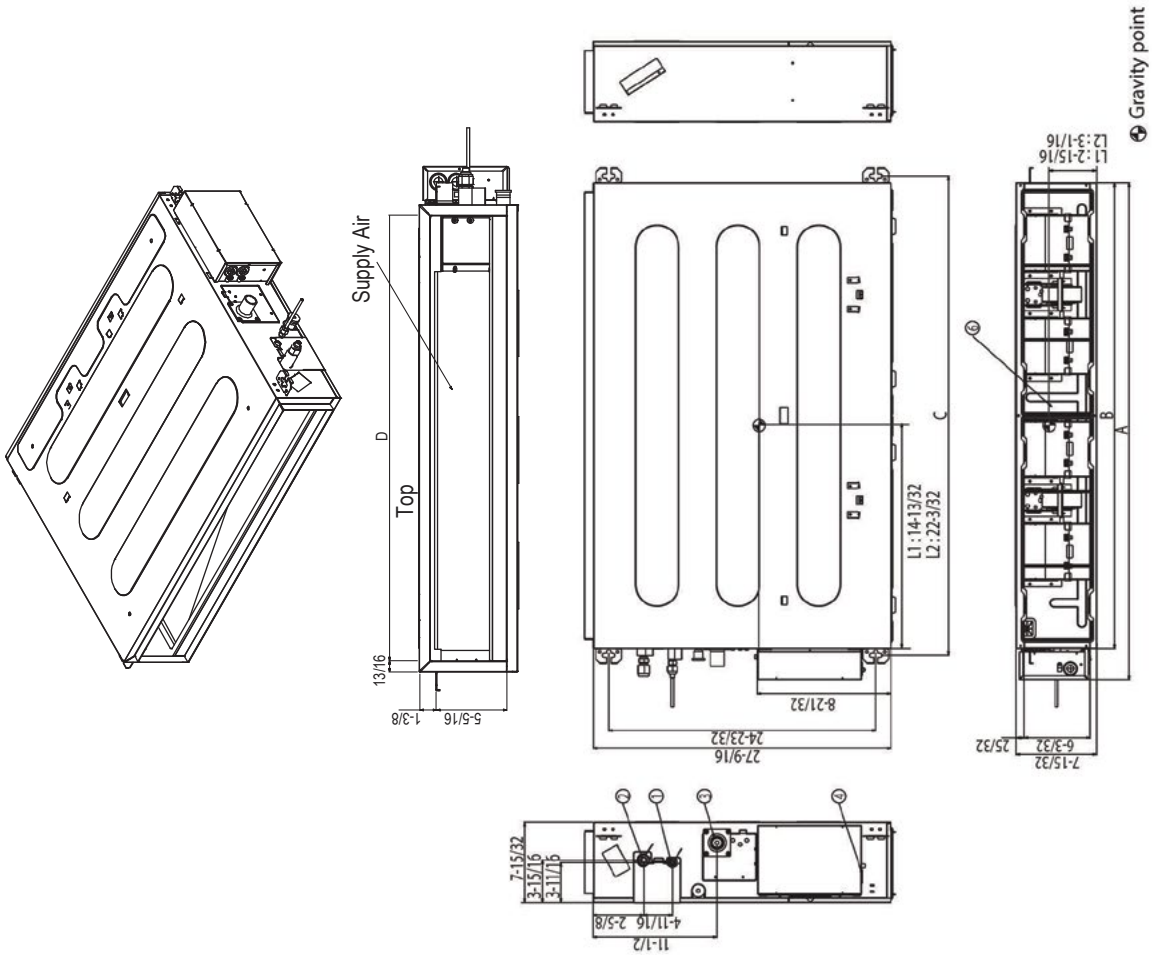

For continual product development, LG reserves the right to change specifications without notice.
© LG Electronics U.S.A., Inc., Englewood Cliffs, NJ. All rights reserved. "LG Life's Good" is a registered trademark of LG Corp. /www.lghvac.com