Job Name/Location: Tag No.:

Date:

For: ☐ File ☐ Resubmit ☐ Approval ☐ Other_____

PO No.:

Architect: GC:

Engr: Mech:

Rep:
(Company) (Project Manager)

KSUJB091A

Single Zone Mid Static Ducted

Outdoor Unit (ODU) - KUSXB091A, Indoor Unit (IDU) - KNUJB091A

Performance:

Cooling:

Cooling Capacity (Min~Rated~Max, Btu/h)	3,600 ~ 9,000 ~ 10,700
SEER2	16.40
EER2	12.20

SEER - Seasonal Energy Efficiency Ratio EER - Energy Efficiency Ratio

Heating:

Heating Capacity (Min~Rated~Max, Btu/h)	5,600 ~ 13,500 ~ 16,000
HSPF2	10.40
Max. Heating @ Indoor 70°F DB (Btu/h)	
Outdoor 17°F WB	11,700
Outdoor 5°F WB	10,500
Outdoor -4°F WB	9,500
Outdoor -13°F WB	N/A

HSPF - Heating Seasonal Performance Factor
Cooling Nominal Test Conditions:
Indoor: 80°F DB / 67°F WB
Outdoor: 95°F DB / 75°F WB

Heating Nominal Test Conditions:
Indoor: 70°F DB / 60°F WB
Outdoor: 47°F DB / 43°F WB

Electrical:

Power Supply (V¹/Hz/Ø)	208-230/60/1
MOP (A)	15
MCA (A)	13.4
Cooling / Heating Rated Amps (A)	11.1
Compressor (A)	9
Fan Motor (IDU + ODU) (A)	1.7 + 0.4
Cooling Power Input (Min~Rated~Max, kW)	0.20 ~ 0.74 ~ 1.13
Heating Power Input (Min~Rated~Max, kW)	0.26 ~ 1.03 ~ 1.59
Locked Rotor Amps (A)	9.0

MOP - Maximum Overcurrent Protection MCA - Minimum Circuit Ampacity

Piping:

Installed Liquid Pipe (in., O.D.)	1/4
Installed Vapor Pipe (in., O.D.)	3/8
IDU Liquid Connection (in., O.D.)	1/4
IDU Vapor Connection (in., O.D.)	3/8
Additional Refrigerant (oz./ft.)	0.22
Min. / Max. Pipe Length (ft.)²	16.4 / 65.6
Piping Length (no add'l refrig., ft.)	24.6
Max. Elevation (ft.)	49.2

Features:

- Inverter (Variable Speed Compressor)
- Internal Condensate Pump
- Jet Cool / Jet Heat
- Auto Restart
- R32 Leak Detection Sensor
- Auto Changeover
- Night Quiet Operation
- Optional Wi-Fi Control
- Optional Drain Pan Heater
- Direct / Indirect Wind
- Swirl Wind
- Smart Mode
- Refresh Mode
- Optional Aux Heater Relay Kit

Optional Accessories:

☐ Auxillary Heater Kit - PRARH1
☐ Vertical Installation Kit - ABDAMA0
☐ Wi-Fi Module - PWFMDD200
☐ Single Port Shutoff Valve - PRHPZ010A
☐ ODU Wind Baffle - ZLABGP01A

Controller Options:

☐ MultiSITE™ CRC Controllers
☐ Simple Remote Controller
☐ Standard III Remote Controllers
☐ Remote Temperature Button Sensor
☐ Dry Contacts
☐ AC Smart 5 Central Controller
☐ LonWorks® Gateway
☐ MultiSITE Comm. Mgr.
☐ ACP 5 BACnet™ Gateway

For a complete list of available accessories, contact your LG representative.
For continual product development, LG reserves the right to change specifications without notice.

© LG Electronics U.S.A., Inc., Englewood Cliffs, NJ. All rights reserved. "LG Life's Good" is a registered trademark of LG Corp. /www.lghvac.com

Operating Range:

Outdoor Unit:

Cooling (°F DB)	5 ~ 118
Heating (°F WB)	-4 ~ +64

Indoor Unit:

Cooling (°F WB)	57 ~ 77
Heating (°F DB)	59 ~ 81

System Data:

Refrigerant Type	R32
Refrigerant Control	EEV
Refrigerant Charge (lbs.)	2.43
ODU Sound Pressure (Cooling / Heating) (±1 dB[A])³	47 / 51
IDU Sound Pressure (H/M/L) (±1 dB[A])³	28 / 27 / 26
ODU Net / Shipping Weight (lbs.)	75.0 / 79.4
IDU Net / Shipping Weight (lbs.)	61.7 / 71.7
Heat Exchanger Coating	GoldFin™

Fan:

ODU Type	Propeller
IDU Type	Sirocco
Fan Speeds (Fan/Cool/Heat)	3 / 3 / 3
Quantity (ODU + IDU)	1 + 1
Motor/Drive	Brushless Digitally Controlled/Direct
Maximum ODU Air Volume (CFM)	988
IDU Air Flow (CFM Max. H/M/L)	353.1 / 317.8 / 282.5
Default ESP (in wg)	0.24
Minimum ESP/Fan Setting Value⁴	0.1 / 68
Maximum ESP/Fan Setting Value⁴	0.59 / 143
Dehumidification (pts./hr.)	0.35

Notes:

1. Acceptable operating voltage: 187V-253V.
2. Piping lengths are equivalent.
3. Sound Pressure levels are tested in an anechoic chamber under ISO Standard 3745.
4. Maximum static pressure may result in reduced airflow (CFM).
5. All power supply wiring to the outdoor unit is field supplied, solid or stranded. The power wiring and the communication wiring from the outdoor unit to the indoor unit is field supplied and must be stranded, shielded or unshielded (if shielded, it must be grounded to the chassis of the outdoor unit only). All wiring must comply with applicable local and national codes.
   a. Power Supply Wiring to ODU: (No. x AWG): 3 x 12 for 9k, 12k, 18k, and 24k; 3 x 10 for 30k, 36k, 42k, and 48k.
   b. Power Wiring and Communication Wiring from Outdoor Unit to Indoor Unit: (No. x AWG) 3 x 14 / 2 x 18.
6. See Engineering Manual for sensible and latent capacities.
7. Power wiring cable size must comply with the applicable local and national code.
8. The indoor unit comes with a dry helium charge.
9. This data is rated 0 ft. above sea level, with 24.6 ft. of refrigerant line and a 0 ft. level difference between outdoor and indoor units.
10. Must follow installation instructions in the applicable LG installation manual.
11. If the optional low ambient wind baffle is used, one wind baffle is required for each ODU fan.

BACnet® is a registered trademark of ASHRAE. LonWorks® is a trademark of Echelon Corporation.

ENERGY STAR

Intertek

AHRI CERTIFIED® www.ahridirectory.org
Unitary Small HP
AHRI Standard 210/240
Certification applies only when the complete system is listed with AHRI.

Proper sizing and installation of equipment is critical to achieve optimal performance. Split system air conditioners and heat pumps (excluding ductless systems) must be matched with appropriate coil components to meet ENERGY STAR® criteria. Ask your contractor for details or visit www.energystar.gov. (ENERGY STAR and the ENERGY STAR mark are registered trademarks owned by the U.S. Environmental Protection Agency.)

Job Name/Location: _____

KSUJB091A

Single Zone Mid Static Ducted

Outdoor Unit (ODU) - KUSXB091A, Indoor Unit (IDU) - KNUJB091A

Tag No.: _____

Date: _____

PO No.: _____

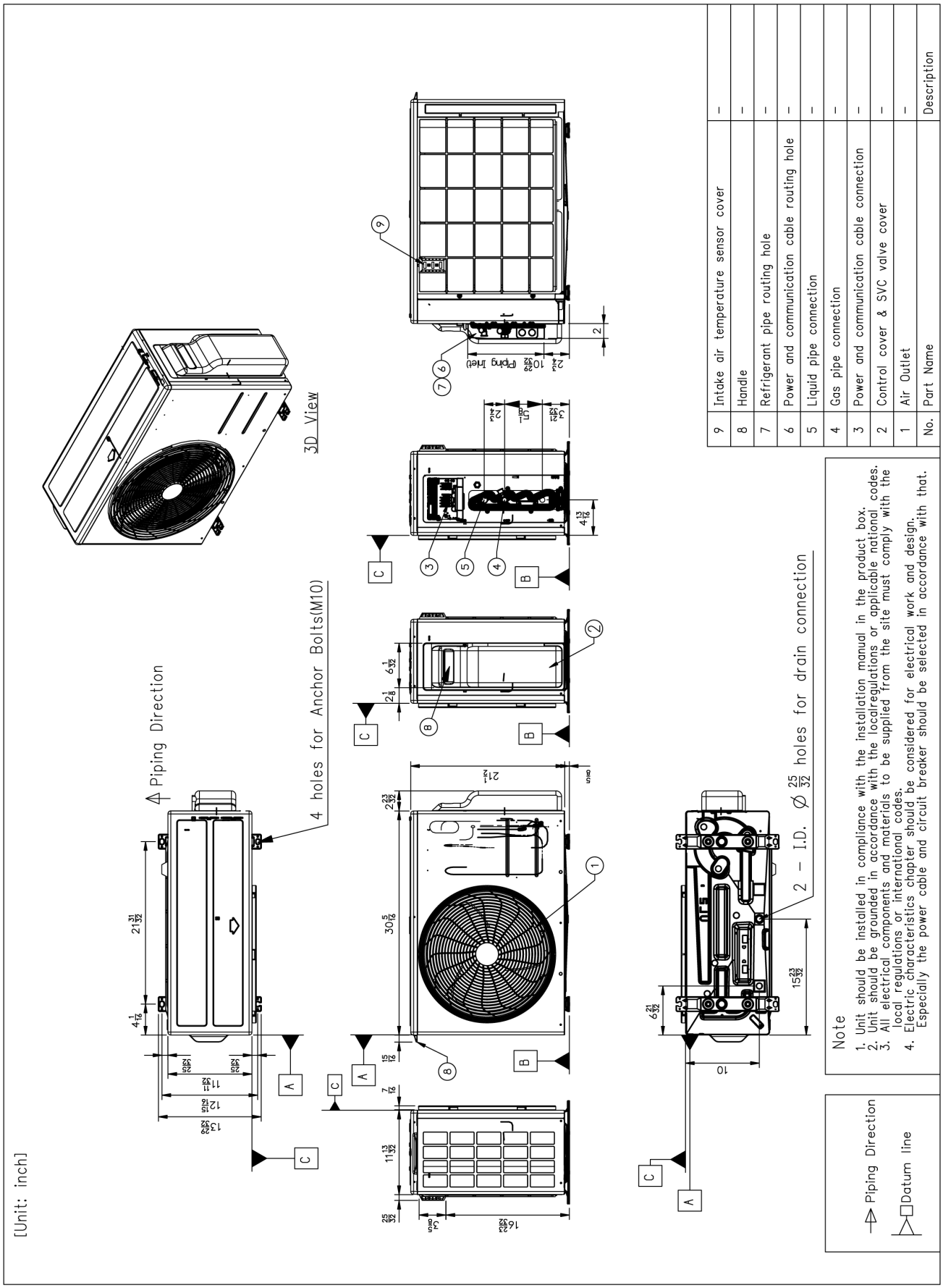

No.	Part Name	Description
9	Intake air temperature sensor cover	–
8	Handle	–
7	Refrigerant pipe routing hole	–
6	Power and communication cable routing hole	–
5	Liquid pipe connection	–
4	Gas pipe connection	–
3	Power and communication cable connection	–
2	Control cover & SVC valve cover	–
1	Air Outlet	–

Note

1. Unit should be installed in compliance with the installation manual in the product box.
2. Unit should be grounded in accordance with the localregulations or applicable national codes.
3. All electrical components and materials to be supplied from the site must comply with the local regulations or international codes.
4. Electric characteristics chapter should be considered for electrical work and design. Especially the power cable and circuit breaker should be selected in accordance with that.

For continual product development, LG reserves the right to change specifications without notice.
© LG Electronics U.S.A., Inc., Englewood Cliffs, NJ. All rights reserved. "LG Life's Good" is a registered trademark of LG Corp. /www.lghvac.com

Job Name/Location: _____

KSUJB091A

Single Zone Mid Static Ducted

Outdoor Unit (ODU) - KUSXB091A, Indoor Unit (IDU) - KNUJB091A

Tag No.: _____

Date: _____

PO No.: _____

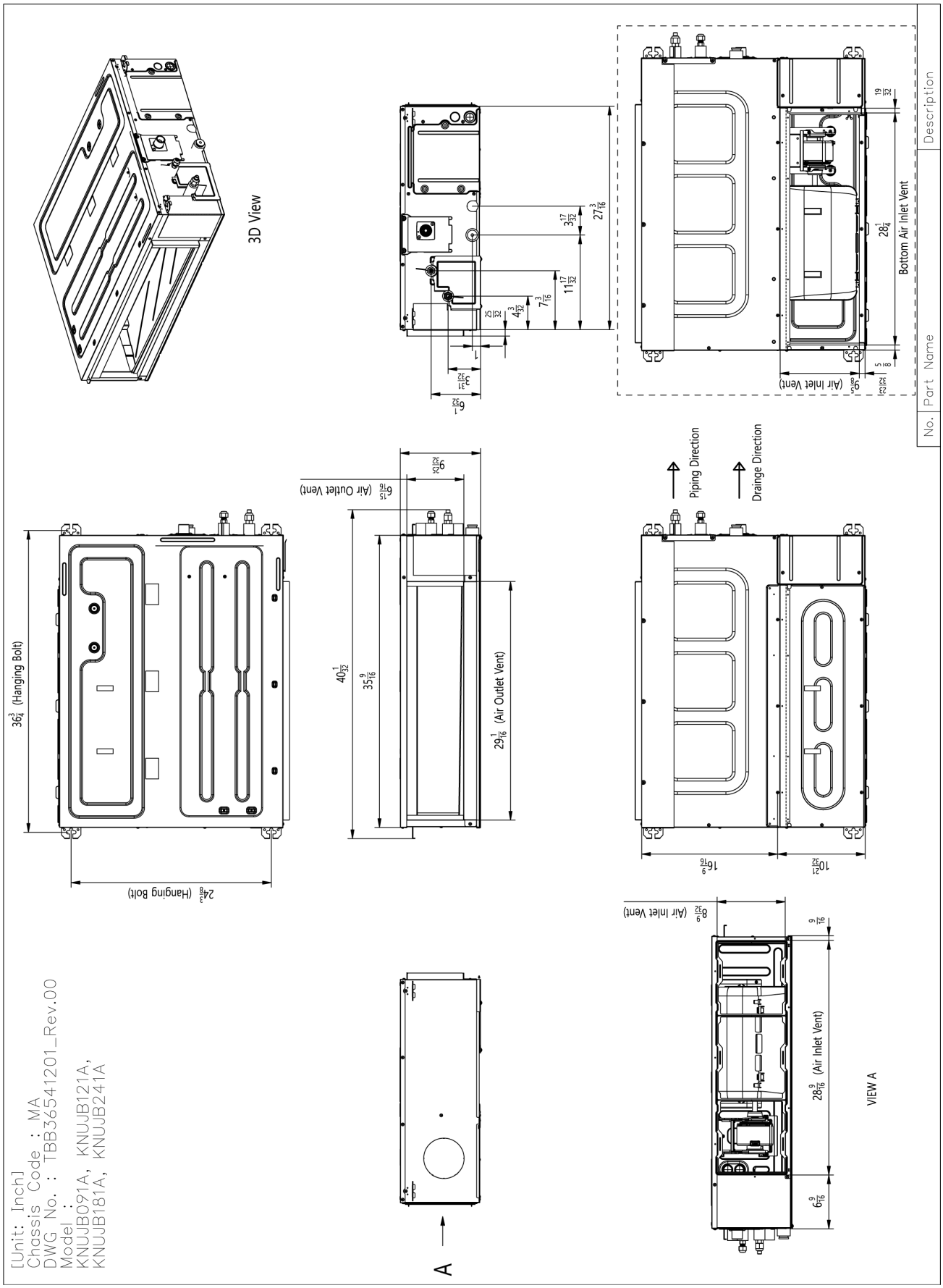

For continual product development, LG reserves the right to change specifications without notice.
© LG Electronics U.S.A., Inc., Englewood Cliffs, NJ. All rights reserved. "LG Life's Good" is a registered trademark of LG Corp. /www.lghvac.com