Job Name/Location: Tag No:

Date:

PO No.:

For: ☐ File ☐ Resubmit ☐ Approval ☐ Other _____

Architect: GC:

Engr: Mech:

Rep:
(Company) (Project Manager)

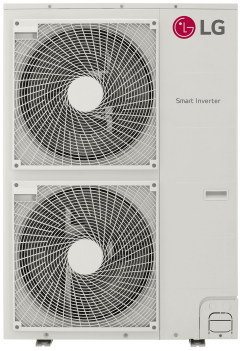

KUMXB541A

R32 Multi F Max Outdoor Unit

Outdoor Unit (ODU) - KUMXB541A

Performance:

Cooling Capacity (Min.-Rated-Max., Btu/h)	10.800~50.500~63.200
Heating Capacity (Min.-Rated-Max., Btu/h)	12.420~58.000~64.000
Max. Heating Capacity at 17°F (Btu/h)	48.000
Max. Heating Capacity at 5°F (Btu/h)	40.500
Max. Heating Capacity at -4°F (Btu/h)	35.200
Cooling COP @95°F (Rated)	3.69
Heating COP @47°F (Rated)	3.35

Cooling Nominal Test Conditions:
Indoor: 80°F DB / 67°F WB
Outdoor: 95°F DB / 75°F WB

Heating Nominal Test Conditions:
Indoor: 70°F DB / 60°F WB
Outdoor: 47°F DB / 43°F WB

Electrical:

Power Supply (V/Hz/Ø)[1,2]	208-230V, 60, 1
MOP (A)	40
MCA (A)	33.3
Cooling Rated Amps (A)	24.3
Heating Rated Amps (A)	24.3
Compressor (A)	23
Fan Motor (A)	0.65 x 2
Locked Rotor Amps (A)	22

MOP - Maximum Overcurrent Protection MCA - Minimum Circuit Ampacity

Piping:

Refrigerant Charge (lbs.)	7.5
Liquid Line Connection (in., O.D.)	Ø3/8 x 1
Vapor Line Connection (in., O.D.)	Ø3/4 x 1
Maximum Total Piping[3] (ft.)	475.7
Min. / Max. ODU to IDU Piping[4] (ft.)	32.8 / 229.6
Piping Length[5] (no add'l refrigerant, ft.)	180.4
Additional Refrigerant Charge Main Pipe (oz. / ft.)	0.54
Additional Refrigerant Charge Branch Pipe (oz. / ft.)	0.22
Maximum Elevation between ODU and IDU (ft.)	98.4
Maximum Elevation between IDU and IDU (ft.)	49.2

ODU = Outdoor Unit IDU = Indoor Unit

Features:

- Scroll (variable speed) compressor
- Auto operation / Auto restart
- Integrated central control connection
- Self diagnosis
- Defrost / Deicing
- Restart delay (three [3] minutes)
- Soft start
- Low ambient cooling down to 14°F (-4°F with Wind Baffle Kit)

Required Accessories:[6]

☐ 2-Port BD Unit - PMBD3620ZR
☐ 3-Port BD Unit - PMBD3630ZR
☐ 4-Port BD Units - PMBD3640ZR / PMBD3641ZR

Optional Accessories:

☐ Power Distribution Indicator (PDI) Premium - PQNUD1S41
☐ Mobile LGMV for Android® Smartphones / Tablets or for iOS® Tablets - PLGMVW100
(Android is a registered trademark of Google LLC. iOS is a registered trademark of Cisco Systems, Inc.)
☐ LG Monitoring View (LGMV) for Computers - PRCTIL0
☐ Drain Pan Heater - PQSH1200
☐ Low Ambient Wind Baffle Kit - ZLABGP04A x 2

Controller Options:

☐ MultiSITE Communication Mgr.
☐ AC Smart 5
☐ ACP 5
☐ ACP 5 BACnet® Gateway
☐ LonWorks® Gateway
BACnet® is a registered trademark of ASHRAE. LonWorks is a registered trademark of Echelon Corp.

Operating Range:

Cooling (°F DB)	14 to 118
Heating (°F WB)	-4 to +64

Unit Data:

Refrigerant Type	R32
Refrigerant Control	EEV
Sound Pressure (Cool / Heat) ±1 dB(A)[7]	53 / 55
Net / Shipping Weight (lbs.)	194 / 218.3
Power Wiring: ODU→BDU, BDU→IDU (No x AWG)[2]	3 x 14, 3 x 14
Comm. Wiring: ODU→BDU, BDU→IDU (No x AWG)[2]	2 x 18, 2 x 18
Heat Exchanger Coating	Gold Fin™
Minimum No. of Indoor Units	2
Maximum No. of Indoor Units	8

Compressor:

Type	Scroll
Quantity	1
Oil / Type	PVE

Fan:

Type	Propeller
Quantity	2
Motor / Drive	Brushless Digitally Controlled/Direct
Max. Airflow Rate (CFM)	2,295 x 2

Notes:

1. Acceptable operating voltage: 187V - 253V.
2. All power supply wiring to the outdoor unit is field supplied, solid or stranded. The power wiring and the communication wiring from the outdoor unit to the branch distribution unit, and from the branch distribution unit to the indoor unit is field supplied and must be stranded, shielded or unshielded (if shielded, it must be grounded to the chassis of the outdoor unit only). All wiring must comply with applicable local and national codes.
   a. Power Supply Wiring to Outdoor Unit (No. x AWG): 3 x 8 for 48k, 54k, and 60k.
   b. Power Wiring and Communication Wiring from ODU to BDU (No. x AWG) 3 x 14 / 2 x 18.
   c. Power Wiring and Communication Wiring from BDU to IDU (No. x AWG) 3 x 14 / 2 x 18.
3. Piping lengths are equivalent.
4. 180.4 ft. of Main Piping + 49.2 ft. of Branch Piping.
5. 49.2 ft. of Main Piping + 131.2 of Branch Piping.
6. At least one branch distribution (BD) unit is required for system operation; a maximum of two can be installed per outdoor unit with the use of a Y-branch accessory (ARBLN03321).
7. Sound pressure levels are tested in an anechoic chamber under ISO Standard 3745.
8. See the Engineering Manual Capacity Tables for ODU sensible and latent capacities.
9. See the Engineering Manual Combination Tables for allocation of ODU rated capacity to each connected IDU when all are calling for full capacity. Allocation percentages should be applied to ODU capacity at design conditions.
10. Capacity is rated 0 ft. above sea level, with a 0 ft. level difference between ODU and IDUs, and the following refrigerant pipe lengths:
KUMXB481 / 541 / 601A: 16.4 ft. Main + (16.4 ft. Branch x 8) = 147.6 ft. All capacities are net with a combination ratio between 95 - 105%.
11. Must follow installation instructions in the applicable LG installation manual.
12. See the Engineering Manual Capacity Tables for ODU capacity at design conditions.

Proper sizing and installation of equipment is critical to achieve optimal performance. Split system air conditioners and heat pumps (excluding ductless systems) must be matched with appropriate coil components to meet ENERGY STAR® criteria. Ask your contractor for details or visit www.energystar.gov.
(ENERGY STAR and the ENERGY STAR mark are registered trademarks owned by the U.S. Environmental Protection Agency.)

For a complete list of available accessories, contact your LG representative.
For continual product development, LG reserves the right to change specifications without notice.
© LG Electronics U.S.A., Inc., Englewood Cliffs, NJ. All rights reserved. "LG Life's Good" is a registered trademark of LG Corp. /www.lghvac.com

Job Name/Location: _____

KUMXB541A

R32 Multi F Max Outdoor Unit

Outdoor Unit (ODU) - KUMXB541A

Tag No.: _____

Date: _____

PO No.: _____

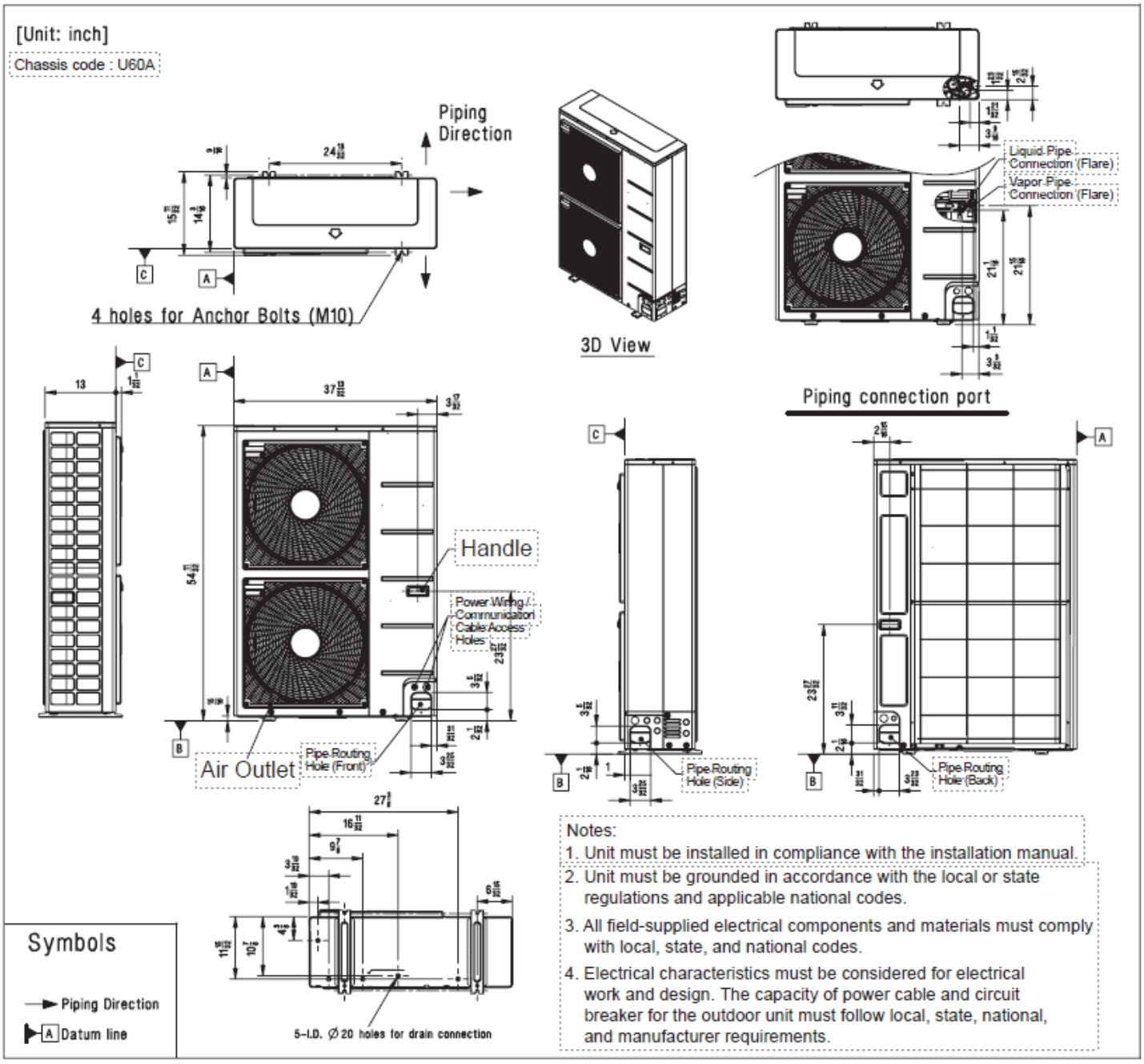

For continual product development, LG reserves the right to change specifications without notice.
© LG Electronics U.S.A., Inc., Englewood Cliffs, NJ. All rights reserved. "LG Life's Good" is a registered trademark of LG Corp. /www.lghvac.com

Job Name/Location: _____

KUMXB541A

R32 Multi F Max Outdoor Unit

Outdoor Unit (ODU) - KUMXB541A

Tag No.: _____

Date: _____

PO No.: _____

Example: Outdoor unit with seven (7) indoor units, and two (2) branch distribution units connected. ODU: Outdoor Unit.
IDU: Indoor Unit.
BD: Branch Distribution Unit(s).
A: Main Pipe.
B: Branch Pipe (Branch Distribution Unit[s] to Indoor Unit[s]).

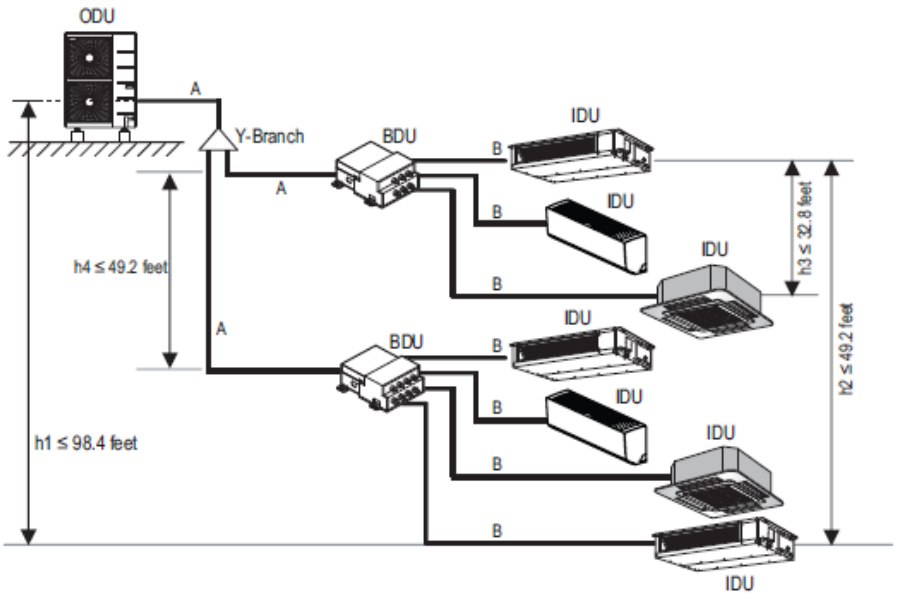

Multi F MAX Outdoor Unit Refrigerant Piping System Limitations.

Pipe Length (ELF = Equivalent Length of pipe in Feet)	**Total piping length (ΣA + ΣB)**		≤475.7 feet
	Main pipe (Outdoor Unit to Branch Distribution Units: A)	**Minimum for Each (A) Piping Segment**	16.4 feet
		Maximum (ΣA)	≤180.4 feet
	Total branch piping length (ΣB)		≤295.3 feet
	Branch pipe (Branch Distribution Units to Indoor Units: B)	**Minimum**	16.4 feet
		Maximum	≤49.2 feet
Elevation Differential (All Elevation Limitations are Measured in Actual Feet)	**If outdoor unit is above or below indoor unit (h1)**		≤98.4 feet
	Between the farthest two indoor units (h2)		≤49.2 feet
	Between branch distribution unit and farthest connected indoor unit(s) (h3)		≤32.8 feet
	Between branch distribution units (h4)		≤49.2 feet

Installing the Unit

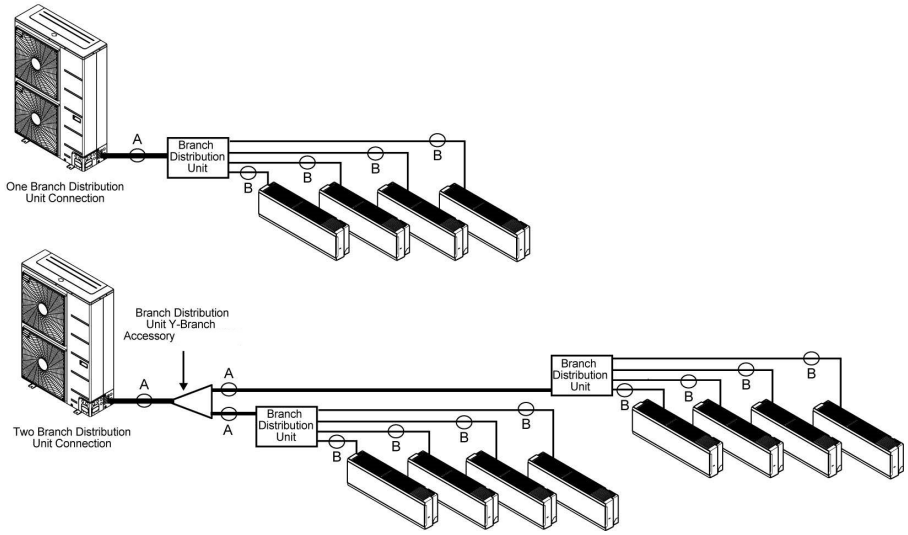

Multi F MAX Piping Sizes.

Piping	Main Pipe A (inch)	Branch Pipe B
Liquid	Ø3/8	Depends on the size of the indoor unit piping.
Vapor	Ø3/4	

For continual product development, LG reserves the right to change specifications without notice.
© LG Electronics U.S.A., Inc., Englewood Cliffs, NJ. All rights reserved. "LG Life's Good" is a registered trademark of LG Corp. /www.lghvac.com