This product utilizes **R-454B** *refrigerant*

MRCOOL® Olympus Series Ceiling Cassette

INSTALLATION & OWNER'S MANUAL

MODELS:

CASSETTE*HP-230C-O
MULTI*-*HP230C-O

Read this manual carefully before installation and keep it where the operator can easily find it for future reference.

Due to updates and constantly improving performance, the information and instructions within this manual are subject to change without notice.

Version Date: October 29, 2025
Please visit www.mrcool.com/documentation
to ensure you have the latest version of this manual.

MRCOOL®
COMFORT MADE SIMPLE

CONTENTS

1 SAFETY 2
2 UNIT OVERVIEW 9
2.1 Packing List 9
2.2 Product Overview 10
2.3 Packing & Unpacking the Unit 11
2.4 Indoor Unit Display 11
2.5 Other Features 12
3 INDOOR UNIT INSTALLATION 13
3.1 Installation Summary 13
3.2 Installation Location 13
3.3 Mounting Dimensions 15
3.4 Hang Indoor Unit 16
3.5 Drill Wall Opening 18
3.6 Drain Hose Connection 18
4 OUTDOOR UNIT INSTALLATION 20
4.1 Installation Location 20
4.2 Drain Joint Installation 21
4.3 Anchor Outdoor Unit 22
5 REFRIGERANT PIPING CONNECTION 23
5.1 Pipe Length & Elevation 23
5.2 Connection Instructions 23
6 ELECTRICAL CONNECTION 26
6.1 Wiring Precautions 26
6.2 Outdoor Unit Wiring 27
6.3 Indoor Unit Wiring 28
7 AIR EVACUATION 29
7.1 Evacuation Instructions 29
7.2 Adding Refrigerant 30
8 PANEL INSTALLATION 30
8.1 Panel Installation Steps 30
9 POST-INSTALLATION 32
9.1 Test Run 32
9.2 Care & Maintenance 33
9.3 Troubleshooting 35
9.4 Error Display (Indoor Unit) 37
9.5 Error Display (Outdoor Unit with Auxiliary Board) 38
9.6 Quick Maintenance by Error Code 39

Safety Precautions

Read Before Using

Incorrect usage may cause serious damage or injury.

The symbols below are used throughout this manual to indicate instructions that should be followed closely or actions that should be avoided to prevent death, injury, and/or property damage.

WARNING	Indicates the possibility of personal injury or loss of life.
CAUTION	Indicates the possibility of property damage or serious consequences.

WARNING FOR PRODUCT INSTALLATION

INSTALLATION MUST BE PERFORMED BY AN AUTHORIZED DEALER OR SPECIALIST. DEFECTIVE INSTALLATION CAN CAUSE WATER LEAKAGE, ELECTRICAL SHOCK, OR FIRE.

******ELECTRICAL WORK MUST BE COMPLETED BY A QUALIFIED ELECTRICAL TECHNICIAN******

- ***DO NOT* install the unit in a location that may be exposed to combustible gas leaks. If combustible gas accumulates around the unit, it could cause fire.**
- ***DO NOT* turn on the power until the installation and all work has been completed.**

1. Installation must be performed according to the installation instructions. Improper installation could cause water leakage, electrical shock, or fire.
2. Contact an authorized service technician for repair or maintenance of this unit.
3. This appliance must be installed in accordance with national wiring regulations.
4. Only use the included accessories, parts, and specified parts for installation. Using non-standard parts can cause water leakage, electrical shock, fire, and/or failure of the unit.
5. Install the unit in a firm location that can support the unit's weight. If the location cannot support the unit's weight, or the installation is not done properly, the unit may drop and cause serious injury and damage.
6. Install the drainage piping according to the instructions in this manual. Improper drainage could cause water damage to your home and/or property.
7. When moving or relocating the air conditioner, consult experienced service technicians for disconnection and re-installation of the unit.
8. For detailed information of how to install the indoor and outdoor units to their respective supports, please refer to the indoor unit installation and outdoor unit installation sections of this manual.
9. USB device access, replacement, and maintenance operations must be carried out by professional staff.

WARNING FOR CLEANING & MAINTENANCE

1. **DO NOT** clean the unit with excessive amounts of water.
2. **DO NOT** clean the unit with combustible cleaning agents, as these could cause deformation and/or fire.
3. Turn off the device and disconnect the power before cleaning. Failure to do this could result in electrical shock.

TAKE NOTE OF FUSE SPECIFICATIONS

- The unit's circuit board (PCB) is designed with a fuse to provide over-current protection.
- The specifications of the fuse are printed on the circuit board, examples of such are T5A/250VAC and T10A/250VAC.

Note: Only a blast-proof ceramic fuse can be used.

WARNING FOR PRODUCT USE

- ⊘ ***DO NOT*** **insert fingers, rods, or other objects into the air inlet or outlet. This could cause injury, since the fan may be rotating at high speeds.**
- ⊘ ***DO NOT*** **use flammable sprays such as hair spray, lacquer or paint near the unit, as this could cause fire and/or an explosion.**
- ⊘ ***DO NOT*** **operate the unit in places near or around combustible gases. Emitted gas may collect around the unit and cause an explosion.**
- ⊘ ***DO NOT*** **allow children to play with the appliance. Children must be supervised around the unit at all times.**
- ⊘ ***DO NOT*** **operate the unit in a room where it could be exposed to excessive amounts of water, such as a bathroom or laundry room. Exposure to excessive water amounts can cause the electrical components to short circuit.**
- ⊘ ***DO NOT*** **expose your body directly to direct cool airflow from the unit for a prolonged period of time.**

1. If the unit operates abnormally (emits strange noises or a burning smell), immediately turn off the unit and disconnect the power in order to avoid electric shock, fire, and/or injury. Call your local dealer, or MRCOOL® tech support at (270) 366-0457, for further assistance.
2. If the air conditioner is used together with burners or other heating devices, thoroughly ventilate the room in order to avoid an oxygen deficiency.
3. In certain functional environments (such as kitchens and server rooms etc.), the use of specially designed air-conditioning units is highly recommended.
4. This appliance is not intended for use by persons (including children) with reduced physical, sensory or mental capabilities, or lack of experience and knowledge, unless they have been given supervision or instruction concerning use of the appliance by a person responsible for their safety. Children should be supervised to ensure that they do not play with the appliance.
5. Turn off the unit and disconnect the power before performing any cleaning, installation, or repairing. Failure to do so can cause electric shock.

CAUTION

- ⊘ ***DO NOT*** **allow the air conditioner to operate for extended periods of time with the doors or windows open, or in very high humidity.**
- ⊘ ***DO NOT*** **operate the air conditioner with wet hands, as this could cause electric shock.**
- ⊘ ***DO NOT*** **use device for any other purpose than its intended use.**
- ⊘ ***DO NOT*** **climb onto or place objects on top of the outdoor unit.**

1. Make sure that water condensation can drain smoothly and unhindered from the unit.
2. Turn off the unit and disconnect the power if the unit will not be used for an extended period of time.
3. Turn off and unplug the unit during storms.

ELECTRICAL WARNINGS

******ELECTRICAL WORK MUST BE COMPLETED BY A QUALIFIED ELECTRICAL TECHNICIAN******

- ⊘ ***DO NOT*** **share the power supply with other appliances. An improper or insufficient power supply could cause fire and/or electrical shock.**

1. Only use the specified wire. If the wire is damaged, it must be replaced by the manufacturer, its service agent or similarly qualified persons in order to avoid a hazard.
2. The product must be properly grounded during installation or electrical shock could occur.
3. Appropriate wiring standards, regulations, and the installation manual must be followed for all electrical work.
4. If connecting power to fixed wiring, an all-pole disconnection device must be incorporated in the fixed wiring in accordance with the wiring rules and must meet the following requirements: at least 3 mm of clearances in all poles, a leakage current that may exceed 10 mA, and a residual current device (RCD) having a rated residual operating current not exceeding 30 mA.
5. Connect cables tightly and clamp them securely to prevent external forces from damaging the terminal.

ELECTRICAL WARNINGS

Improper electrical connections could overheat, causing fire and/or electrical shock.

6. All electrical connections must be made according to the Electrical Connection Diagram located on the panels of the indoor and outdoor units.
7. All wiring must be properly arranged to ensure that the control board cover can close properly. If the control board cover is not properly closed, it can lead to corrosion and cause the connection points on the terminal to heat up, catch fire, or cause electrical shock.
8. Disconnection must be incorporated in the fixed wiring in accordance with the wiring rules.

FLAMMABLE REFRIGERANT WARNINGS

1. The installation of pipe-work should be kept to a minimum and should be protected from physical damage.
2. Refrigerant pipes should comply with national gas regulations.
3. All mechanical connections and ventilation openings should be kept clear of obstruction.
4. Any person involved with working on or breaking into a refrigerant circuit should hold a current valid certificate from an industry-accredited assessment authority, which authorizes their competence to handle refrigerants safely in accordance with an industry recognized assessment specification.
5. Maintenance and repair requiring the assistance of other skilled personnel shall be carried out under the supervision of the person competent in the use of flammable refrigerants.
6. Do not use any means to accelerate the defrosting process or to clean, other than those recommended by the manufacturer.
7. The appliance shall be stored in a room without continuously operating ignition sources (for example: open flames, an operating gas appliance, or an operating electric heater).
8. Do not allow foreign matter (oil, water, etc.) to enter the piping, and securely seal the opening by pinching, taping, etc.
9. Do not pierce or burn.
10. Refrigerants may not contain an odor.
11. Working procedures that affect safety should only be carried out by competent persons.
12. The unit should be stored in a well-ventilated area where the room size corresponds to the room area as specific for operation, and should be stored so as to prevent potential mechanical damage from occurring.
13. Joints should be tested with detection equipment with a capability of 5 g/year of refrigerant or better, with the equipment in standstill and under operation or under a pressure of at least these standstill or operation conditions after installation. Detachable joints should NOT be used in the indoor side of the unit (brazed, welded joint could be used).
14. A leak detection system is installed. The unit must be powered except for service. For units with a refrigerant sensor, the indoor unit will display an error code and emit a buzzing sound, the compressor of the outdoor unit will immediately stop, and the indoor fan will start running. The service life of the refrigerant sensor is 15 years. When the refrigerant sensor malfunctions, the indoor unit will display the error code "FHCC". The refrigerant sensor cannot be repaired and can only be replaced by the manufacturer. It should only be replaced with the sensor specified by the manufacturer.
15. When a flammable refrigerant is used, the requirements for installation space of the appliance and/or ventilation requirements are determined according to:
    - The mass charge amount (M) used in the unit.
    - The installation location.
    - The type of ventilation of the location of the unit.
    - Piping material, pipe routing, and installation must include protection from physical damage in operation and service. This must be in compliance with local codes and standards, such as ASHRAE 15, IAPMO Uniform Mechanical Code, ICC International Mechanical Code, or CSA B52. All field joints must be accessible for inspection prior to being covered or enclosed.
    - Protection devices, piping and fittings must be protected as much as possible against adverse environmental effects. For example, against the danger of water collecting and freezing in relief pipes or against accumulation of dirt or debris.

FLAMMABLE REFRIGERANT WARNINGS

- Piping in refrigeration systems must be designed and installed to minimize the likelihood of hydraulic shock, resulting in damage from the system.
- Steel pipes and components must be protected against corrosion with a rust-proof coating before applying insulation.
- Precautions must be taken against excessive vibration or movement of the unit.
- The minimum floor area of the room must be mentioned in the form of a table or a single figure without reference to a formula.

16. After completion of field piping for split systems, the field pipework should be pressure tested with an inert gas and then vacuum tested prior to refrigerant charging, according to the following requirements:
    - The minimum test pressure for the low side of the system should be the low side design pressure and the minimum test pressure for the high side of the system should be the high side design pressure, unless the high side of the system cannot be isolated from the low side of the system in which case the entire system should not be pressure tested to the low side design pressure.
    - The test pressure after removal of pressure source shall be maintained for at least 1 hour with no decrease of pressure indicated by the test gauge, with test gauge resolution not exceeding 5% of the test pressure.
17. Prior to beginning work on systems containing flammable refrigerants, safety checks are necessary to ensure that the risk of ignition is minimized. For repairs to the refrigerating system, the following precautions shall be complied with prior to conducting work on the system.
18. Work should be undertaken under a controlled procedure so as to minimize the risk of a flammable gas or vapor being present while the work is being performed.
19. All maintenance staff and others working in the local area should be instructed on the nature of work being carried out. Avoid work in confined spaces.
20. The area should be checked with an appropriate refrigerant detector prior to and during work, to ensure the technician is aware of potentially flammable atmospheres. Ensure that the leak detection equipment being used is suitable for use with flammable refrigerants, i.e. no sparking, adequately sealed, or intrinsically safe.
21. If any hot work is to be conducted on the refrigeration equipment or any associated parts, appropriate fire extinguishing equipment should be on site and readily available. Have a dry power or CO2 fire extinguisher adjacent to the charging area.
22. No person carrying out work in relation to a refrigerating system which involves exposing any pipe work should use any sources of ignition in such a manner that it may lead to the risk of fire or explosion. All possible ignition sources, including cigarette smoking, should be kept sufficiently far away from the site of installation, repairing, removing, and disposal, during which refrigerant can possibly be released to the surrounding space. Prior to work taking place, the area around the equipment is to be surveyed to make sure that there are no flammable hazards or ignition risks. "No Smoking" signs should be displayed.
23. Ensure that the area is in the open or that it is adequately ventilated before breaking into the system or conducting any hot work. A degree of ventilation shall continue during the period that the work is carried out. The ventilation should safely disperse any released refrigerant and preferably expel it externally into the atmosphere.
24. Where electrical components are being changed, they shall be fit for the purpose and to the correct specification. At all times the manufacturer's maintenance ad service guidelines shall be followed. If in doubt, consult the manufacturer's technical department for assistance. The following checks should be applied to installations using flammable refrigerants:
    - the actual refrigerant charge is in accordance with the room size within which the refrigerant containing parts are installed;
    - the ventilation machinery and outlets are operating adequately and are not obstructed;
    - if an indirect refrigerating circuit is being used, the secondary circuits should be checked for the presence of refrigerant;
    - marking to the equipment continues to be visible and legible, marking and signs that are illegible should be corrected;
    - refrigerant pipe or components are installed in a position where they are unlikely to be exposed to any substance which may corrode refrigerant containing components, unless the components are constructed of materials which are inherently resistant to or protected against corrosion.

FLAMMABLE REFRIGERANT WARNINGS

25. Repair and maintenance to electrical components shall include initial safety checks and component inspection procedures. If a fault exists that could compromise safety, then no electrical supply shall be connected to the circuit until it is satisfactorily dealt with. If the fault cannot be corrected immediately but it is necessary to continue operation, an adequate temporary solution should be used.
26. Initial safety checks should include:
    - that capacitors are discharged: this should be done in a safe manner to avoid the possibility of sparking;
    - that there are no live electrical components and wiring are exposed while charging, recovering, or purging the system;
    - that there is continuity of earth bonding.
27. Sealed electrical components should be replaced if damaged.
28. Intrinsically safe components should be replaced if damaged.
29. Check that wiring will not be subject to wear, corrosion, excessive pressure, vibration, sharp edges, or any other adverse environmental effects. The check shall also take into account the effects of aging or continual vibration from sources such as compressors or fans.
30. Under no circumstances should potential sources of ignition be used in the search for or detection of refrigerant leaks. A halide torch (or any other detector using a naked flame) should not be used. The following leak detection methods are deemed acceptable for refrigerant systems. Electronic leak detectors may be used to detect refrigerant leaks but, in the case of flammable refrigerants, the sensitivity may not be adequate, or may need re-calibration. (Detection equipment shall be calibrated in a refrigerant-free area.) Ensure that the detector is not a potential source of ignition and is suitable for the refrigerant used. Leak detection equipment shall be set at a percentage of the LFL of the refrigerant and should be calibrated to the refrigerant employed, and the appropriate percentage of gas (25% minimum) is confirmed. Leak detection fluids are also suitable for use with most refrigerants but the use of detergents containing chlorine may react with the refrigerant and corrode the copper work. Examples of leak detection fluids are the bubble method, fluorescent method agents, etc. If a leak is suspected, all naked flames should be removed/extinguished. If a leakage of refrigerant is found which requires brazing, all of the refrigerant should be recovered from the system, or isolated (by means of shut-off valves) in a part of the system remote from the leak. See the following instructions of removal of refrigerant.
31. When breaking into the refrigerant circuit to make repairs, or for any other purpose, conventional procedures should be used. However, for flammable refrigerants, it is even more vital to follow best practice. The following procedure should be adhered to:
    - safely remove refrigerant following local and national regulations;
    - evacuate;
    - purge the circuit with inert gas;
    - evacuate;
    - continuously flush or purge with inert gas when using flame to open circuit;
    - open the circuit
32. The refrigerant charge should be recovered into the correct recovery cylinders if venting is not allowed by local and national codes. For units containing flammable refrigerants, the system should be purged with oxygen-free nitrogen to render the appliance safe for flammable refrigerants. This process might need to be repeated several times. Compressed air or oxygen shall not be used for purging refrigerant systems. For appliances containing flammable refrigerants, refrigerant purging should be achieved by breaking the vacuum in the system with oxygen-free nitrogen and continuing to fill the working pressure is achieved, then venting to atmosphere, and finally pulling down to a vacuum. This process should be repeated until no refrigerant is within the system. When the final oxygen-free nitrogen charge is used, the system should be vented down to atmospheric pressure to enable work to take place. The outlet for the vacuum pump should not be close to any potential ignition sources, and ventilation should be available.
33. In addition to conventional charging procedures, the following requirements should be followed:
    - Work should be undertaken with appropriate tools only (in case of uncertainty, please consult the manufacturer of the tools for use with flammable refrigerants)
    - Ensure that contamination of different refrigerants does not occur when using charging equipment. Hoses or lines shall be as short as possible to minimize the amount of refrigerant contained in them.

FLAMMABLE REFRIGERANT WARNINGS

- Ensure that the refrigeration system is grounded prior to charging the system with refrigerant.
- Label the system when charging is complete (if not already).
- Extreme care should be taken not to overfill the refrigeration system.
- Prior to recharging the system, it should be pressure tested with oxygen-free nitrogen (OFN). The system should be leak-tested on completion of charging but prior to commissioning. A follow-up leak test shall be carried out prior to leaving the site.

34. Before carrying out this procedure, it is essential that the technician is completely familiar with the equipment and all its detail. It is good recommended practice that all refrigerants are recovered safely. Prior to the task being carried out, an oil and refrigerant sample should be taken in case analysis is required prior to re-use of recovered refrigerant. It is essential that electrical power is available before the task is commenced.
    a. Become familiar with the equipment and its operation.
    b. Isolate the system electrically.
    c. Before attempting the procedure ensure that:
        - mechanical handling equipment is available, if required, for handling refrigerant cylinders;
        - all personal protective equipment is available and being used correctly;
        - the recovery process is supervised at all times by a competent person;
        - recovery equipment and cylinders conform to the appropriate standards

    Pump down refrigerant system, if possible.
    e. If a vacuum is not possible, make a manifold so that refrigerant can be removed from various parts of the system.
    f. Make sure that the cylinder is situated on the scales before recovery takes place.
    g. Start the recovery machine and operate in accordance with instructions.
    h. Do not overfill cylinders (no more than 80% volume liquid charge).
    i. Do not exceed the maximum working pressure of the cylinder, even temporarily.
    j. When the cylinders have been filled correctly and the process completed, make sure that the cylinders and equipment are removed from the site promptly and all isolation valves on the equipment are closed off.
    k. Recovered refrigerant should not be charged into another refrigeration system unless it has been cleaned and checked.
35. Equipment shall be labeled stating that it has been decommissioned and emptied of refrigerant. The label should be dated and signed. For appliances containing flammable refrigerants, ensure that there are labels on the equipment stating the equipment contains flammable refrigerant.
36. When removing refrigerant from a system, either for servicing or decommissioning, it is good recommended practice that all refrigerants are removed safely. When transferring refrigerant into cylinders, ensure that only appropriate refrigerant recovery cylinders are employed. Ensure that the correct number of cylinders for holding the total system charge is available. All cylinders to be used should be designated for the recovered refrigerant and labeled for that refrigerant (i.e. special cylinders for the recovery of refrigerant). Cylinders shall be complete with pressure-relief valve and associated shut-off valves in good working order. Empty recovery cylinders are evacuated and, if possible, cooled before recovery occurs. The recovery equipment should be in good working order with a set of instructions concerning the equipment that is at hand and should be suitable for the recovery of the flammable refrigerant. If in doubt, the manufacturer should be consulted. In addition, a set of calibrated weighing scales should be available and in good working order. Hoses should be complete with leak-free disconnect couplings and in good condition. The recovered refrigerant should be processed according to local legislation in the correct recovery cylinder, and the relevant waste transfer note arranged. Do not mix refrigerants in recovery units and especially not in cylinders.
37. If compressors or compressor oils are to be removed, ensure that they have been evacuated to an acceptable level to make certain that flammable refrigerant does not remain within the lubricant. The compressor body should not be heated by an open flame or other ignition sources to accelerate this process. When oil is drained from a system, it should be carried out safely.
38. Transport of equipment containing flammable refrigerants should comply with transportation regulations.
39. Marking of equipment using signs should comply with local regulations.
40. Disposal of equipment using flammable refrigerants should comply with national regulations.

FLAMMABLE REFRIGERANT WARNINGS

41. Storage of equipment/appliances should be in accordance with the manufacturer's instructions.
42. Storage of packed (unsold) equipment should be constructed so that mechanical damage to the equipment inside the package will not cause a leak of the refrigerant charge. The maximum number of pieces of equipment permitted to be stored together will be determined by local regulations.
43. During the evacuation test, after achieving a vacuum level specified in the manual or less, the refrigeration system shall be isolated from the vacuum pump and the pressure shall not rise above 1500 microns within 10 minutes. The vacuum pressure level should be specified in the manual, and should be the lessor of 500 microns of the value required for compliance with national and local codes and standards, which may vary between residential, commercial, and industrial buildings.
    - Field-made refrigerant joints indoors should be tightness-tested according to the following requirements: the test method should have a sensitivity of 5 grams per year of refrigerant or better under a pressure of at least 0.25 times the maximum allowable pressure. No leak should be detected.
    - Any servicing should be performed only as recommended by MRCOOL®.
44. Any maintenance, service, or repair operations must be performed by qualified personnel. Every working procedure that affects safety should only be carried out by competent persons that are both trained and certified. The training of these procedures should be carried out by national training organizations or manufacturers that are accredited to teach the relevant national competency standards that may be set in legislation. All training should follow the ANNEX HH requirements of UL 60334-2-40 4th Edition.

    Examples of such working procedures are:
    - breaking into a refrigerant circuit
    - opening of sealed components
    - opening of ventilated enclosures

Symbols Displayed on Indoor & Outdoor Unit		
A2L	**WARNING**	This symbol shows that this appliance uses a flammable refrigerant. If the refrigerant is leaked and exposed to an external ignition source, there is a risk of fire.
	CAUTION	This symbol shows that the operation manual should be read carefully.
	CAUTION	This symbol shows that a service personnel should be handling this equipment with reference to the installation manual.
	CAUTION	
	CAUTION	This symbol shows that information is available such as the operating manual or installation manual.

2 UNIT OVERVIEW

2.1 Packing List

This system comes with the following accessories. Use all of the installation parts and accessories to install the unit. Improper installation may result in water leakage, electrical shock and fire, or cause the equipment to fail. The items that are not included with the air conditioner must be purchased separately.

PART	LOOKS LIKE	QUANTITY
Manuals		2 (Installation & Remote)
Soundproof/Insulation Sheath (24K)		1
Soundproof/Insulation Sheath (24K)		1
Outlet Pipe Sheath (24K)	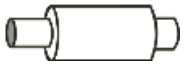	1
Zip-Tie (24K)		6
Remote Control		1
Batteries	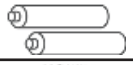	2
Remote Control Holder		1
Magnetic Ring (9K/12K/18K)		2
Wireless Module Cable		1
Drain Joint (in outdoor packaging)		1
Seal Ring (in outdoor packaging)		1
Copper Nut		2
Tapping Screw		6 (24K) 2 (9K/12K/18K)
Throat Bander (24K)		2
Conduit Installation Plate		1
Rubber Block (24K)	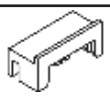	1
Teflon Tape		1
Ceiling Hook	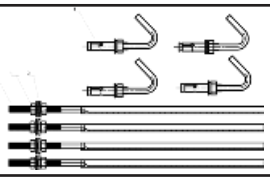	4 (Long) 4 (Short)

Name	Model	Pipe Specification		Remark
		Liquid Side	Gas Side	
Connecting Pipe Assembly	9K	Ø1/4in (Ø6.35mm)	Ø3/8in (Ø9.52mm)	Pipes are not included in the accessories and must be purchased separately from a local dealer.
	12K	Ø1/4in (Ø6.35mm)	Ø3/8in (Ø9.52mm)	
	18K	Ø1/4in (Ø6.35mm)	Ø1/2in (Ø12.7mm)	
	24K	Ø3/8in (Ø9.52mm)	Ø5/8in (Ø16mm)	

2.2 Product Overview

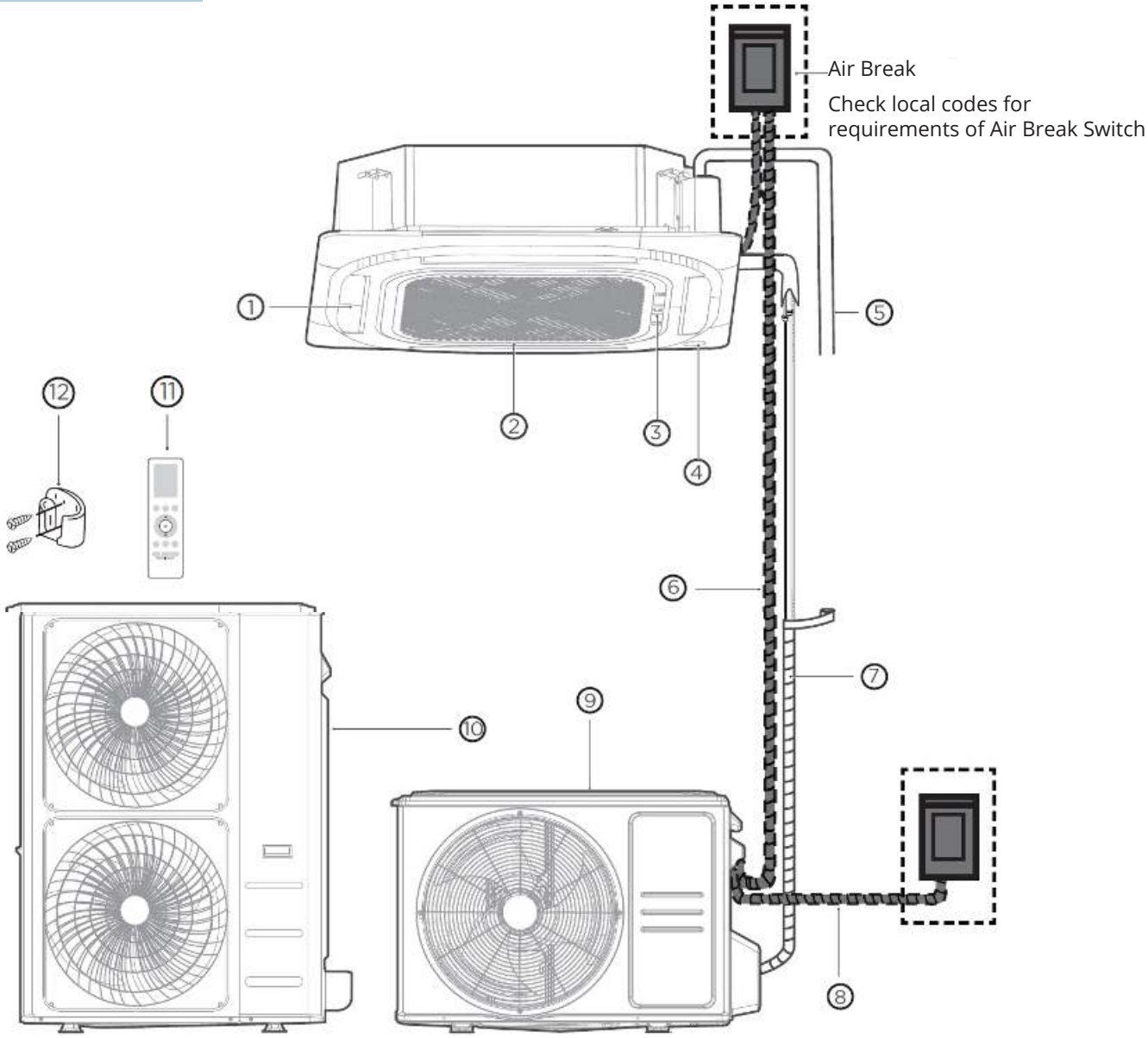

1. Air Outlet
2. Air Inlet
3. Front Grille
4. Display Panel
5. Drain Pipe (purchase separately)
6. Connection Cable (purchase separately)
7. Refrigerant Piping (purchase separately)
8. Outdoor Unit Power Cable (purchase separately)
9. Outdoor Unit (3, 4, and 5-zone)
10. Outdoor Unit (6-zone)
11. Remote Control
12. Remote Control Holder

Illustrations in this manual are for explanatory purposes. The actual shape of your indoor unit may be slightly different. The actual shape shall prevail.

2.3 Packing & Unpacking the Unit

Unpacking the Indoor Unit

1. Cut the packing belt.
2. Unpack the package.
3. Take out the packing materials and support.
4. Remove the packing film
5. Take out the accessories.
6. Lift the machine out and lay it flat.

Unpacking the Outdoor Unit

1. Cut the packing belt.
2. Take the it out of the package.
3. Remove the foam from the unit.
4. Remove the packing film from the unit.

Packing the Indoor Unit

1. Put the indoor unit into the packing film
2. Put the accessories in.
3. Place the packing materials and support.
4. Put the indoor unit into the package.
5. Close the package and seal it.
6. Use the packing belt if necessary.

Packing the Outdoor Unit

1. Put the outdoor unit into the packing film
2. Put the bottom foam into the box.
3. Put the outdoor unit into the package, then put the upper packaging foam on the unit.
4. Close the package and seal it.
5. Use the packing belt if necessary.

2.4 Indoor Unit Display

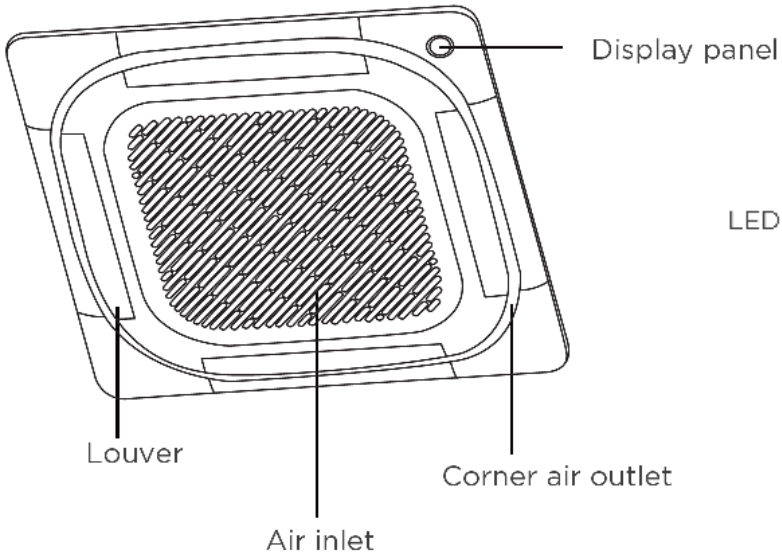

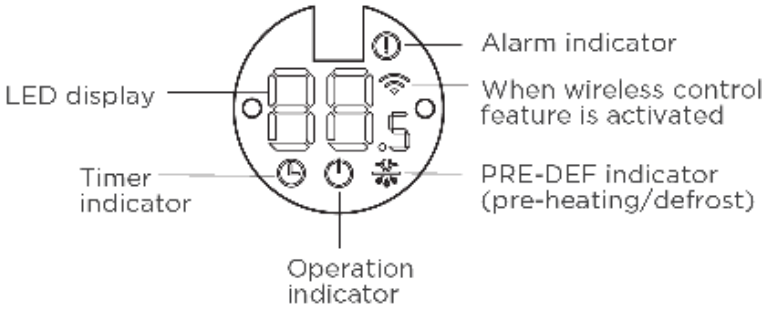

Forced Cool Mode: In Forced Cool mode, the operation light flashes. The system will then turn to Auto after it has cooled with a high wind speed for 30 minutes. The remote control will be disabled during this operation.

Off Mode: When the display panel is turned off, the unit turns off and the remote control is re-enabled.

NOTE

- Check the indoor display window of the unit you purchased. Not all indicators described below are available on all units.
- Illustrations in this manual are for explanatory purposes. The actual shape of your unit may be slightly different. The actual shape shall prevail.
- The display panel on the indoor unit can be used to operate the unit in case the remote control has been misplaced or not functioning.

2.5 Other Features

NOTE

- Every time the unit is powered on, a buzzing sound will be heard to indicate that the product has been powered on normally. If there is no sound, it is possible that the unit is functioning abnormally. Power the unit on again or check the circuit.
- The actual functions are subject to the particular product you purchased. Check the indoor display and remote control of your unit. See the remote control's manual for more features.

Default Setting

When the unit restarts after a power failure, it will default to the factory settings (Auto mode, Auto fan, 76°F (24°C)). This may cause inconsistencies with the remote control and unit panel. Use your remote control to update the status.

Auto-Restart

In case of power failure, the system will immediately stop. When power returns, the operation light will flash. To restart the unit, press the ON/OFF button on the remote control. If the system has an auto restart function, the unit will restart using the same settings.

Three-Minute Protection Feature

A protection feature prevents the unit from being activated for approximately 3 minutes when it restarts immediately after operation.

Louver Angle Memory Function

If your unit features louver angle memory, when the unit restarts after a power failure, the angle of the horizontal louvers will automatically return to the previous position.

The angle of the horizontal louver should not be set too small as condensation may form and drip into the machine. To reset the louver, press the manual button, which will reset the horizontal louver settings.

Heat Exchanger Dust Removal Function

This feature helps keep the outdoor coil cleaner and may extend the duration between regular maintenance intervals depending on local conditions. When the unit is turned off, a 10-second delay occurs then the outdoor fan runs in reverse rotation for 70 seconds to blow off loose accumulated dust and debris.

Sleep Operation

The sleep function is used to decrease energy use while you sleep. This function can only be activated via remote control, and is not available in fan or dry modes.

Press the SLEEP button when you are ready to go to sleep. When in cool mode, the unit will increase the temperature by 2°F (1°C) after 1 hour, and will increase an additional 2°F (1°C) after another hour.

The sleep feature will stop after 8 hours and the system will keep running with the final settings.

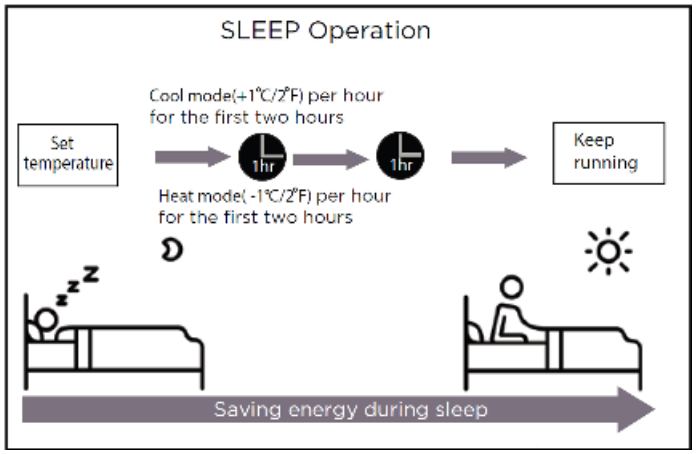

Refrigerant Leakage Detection

- When the system detects a malfunction of the refrigerant, the indoor unit will automatically display the following error codes:

  EL0C - System lacks refrigerant

  EHC1 - Refrigerant sensor detects leakage

  EHC2 - Working condition of the refrigerant sensor is out of range

  ECC1 - Other indoor unit refrigerant sensor detects leakage (multi-zone)
- When EHC1 or EHC2 error occurs, the buzzer will continue to beep for 5 to 6 minutes before stopping. You can also press any button on the remote control to stop the buzzer. NOTE: Error codes EHC1, EHC2, EHC3, and ECC1 are only applicable to the units with a refrigerant sensor.

3 INDOOR UNIT INSTALLATION

3.1 Installation Summary

1
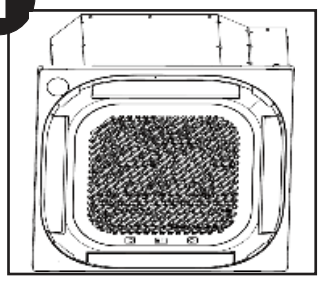
Install the indoor unit.

2
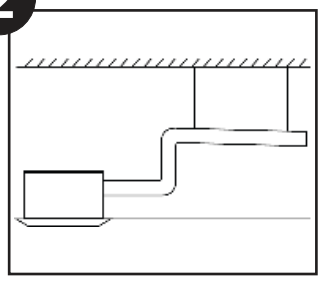
Install the drain pipe.

3
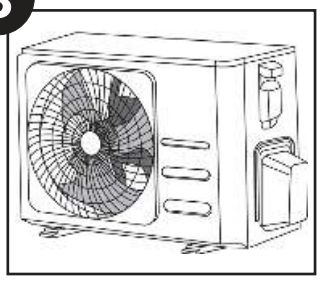
Install the outdoor unit.

4
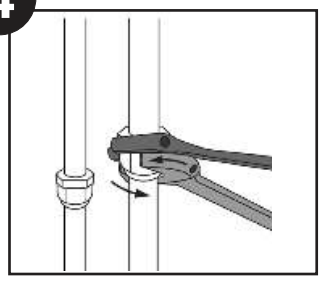
Connect the refrigerant pipes.

5
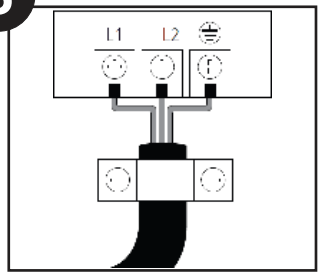

Connect the wires.

6
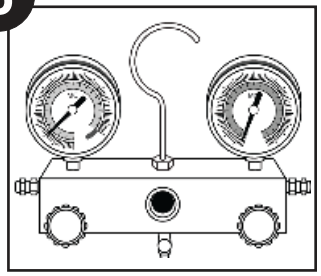
Evacuate the refrigeration system.

7
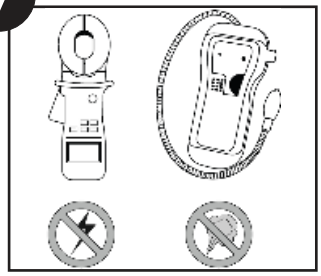
Perform a test run.

8
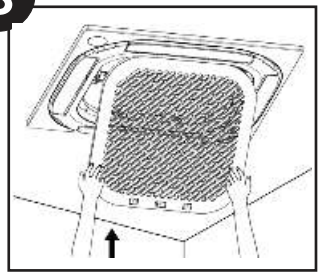
Install the front panel.

3.2 Installation Location

Note: Before you begin installation, refer to the label on the product box to make sure that the model number of the indoor unit matches the model number of the outdoor unit. Panel installation should be performed after piping and wiring have been completed.

The following standards will help you choose an appropriate location for the unit. Proper installation must meet the following specifications:

☑ *Enough room exists for installation & maintenance*

☑ *Enough room for pipe & drainpipe connection*

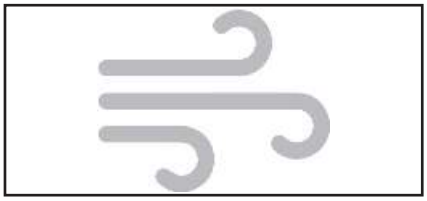

☑ *The airflow can fill the entire room.*

☑ *The air inlet & outlet are not blocked.*

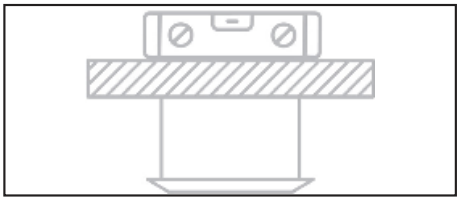

☑ *The ceiling is horizontal & its structure can sustain the weight of the indoor unit.*

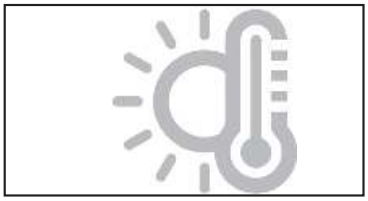

☑ *There is no direct radiation from heaters.*

Do NOT install the unit in the following locations:

- ⊘ Areas with oil drilling or fracking
- ⊘ Coastal areas with high salt content in the air
- ⊘ Areas with caustic gases in the air, such as hot springs
- ⊘ Areas that experience power fluctuations, such as factories.
- ⊘ Enclosed spaces, such as cabinets
- ⊘ Kitchens that use natural gas
- ⊘ Areas with strong electromagnetic waves
- ⊘ Areas that store flammable materials or gas
- ⊘ Rooms with high humidity, such as bathrooms or laundry rooms.

For R454B Refrigerant Charge Amount and Minimum Room Area:

The unit you purchased should be one of the types in the table below. The indoor and outdoor units are designed to be used together. Please check the machine you purchased. The minimum room area of operating or storage should be as specified in the following table.

Model	Indoor Unit	Outdoor Unit	Note
9K	CASSETTE09HP-230C	MULTI3-18HP230C-O MULTI4-27HP230C-O MULTI5-36HP230C-O MULTI6-48HP230C-O	MULTI3-18HP230C-O can connect with 1-3 indoor units; MULTI4-27HP230C-O can connect with 1-4 indoor units; MULTI5-36HP230C-O can connect with 1 to 5 indoor units; MULTI6-48HP230C-O can connect with 1-6 indoor units.
12K	CASSETTE012HP-230C		
18K	CASSETTE18HP-230C		
24K	CASSETTE24HP-230C		

Amin [ft²/m²]	hinst[ft/m]					
mc or mREL [oz/kg]	6.0~7.3/ 1.8~2.2	7.6/2.3	7.9/2.4	8.6/2.6	9.2/2.8	9.9/3.0
<=62.6/1.776	12/1.10					
63.4/1.8	60/5.53	57/5.29	55/5.07	51/4.68	47/4.35	44/4.06
70.5/2.0	67/6.15	64/5.88	61/5.64	56/5.2	52/4.83	49/4.51
77.5/2.2	73/6.76	70/6.47	67/6.2	62/5.72	58/5.31	54/4.96
84.6/2.4	80/7.38	76/7.06	73/6.76	68/6.24	63/5.8	59/5.41
91.7/2.6	86/7.99	83/7.64	79/7.32	73/6.76	68/6.28	64/5.86
98.7/2.8	93/8.6	89/8.23	85/7.89	79/7.28	73/6.76	68/6.31
105.8/3.0	100/9.22	95/8.82	91/8.45	84/7.8	78/7.24	73/6.76
112.8/3.2	106/9.83	102/9.41	97/9.01	90/8.32	84/7.73	78/7.21
119.9/3.4	113/10.45	108/9.99	104/9.58	96/8.84	89/8.21	83/7.66
126.9/3.6	120/11.06	114/10.58	110/10.14	101/9.36	94/8.69	88/8.11
134/3.8	126/11.68	121/11.17	116/10.7	107/9.88	99/9.17	93/8.56
141.1/4.0	133/12.29	127/11.76	122/11.27	112/10.4	104/9.66	97/9.01
148.1/4.2	139/12.9	133/12.34	128/11.83	118/10.92	110/10.14	102/9.46
155.1/4.4	146/13.52	140/12.93	134/12.39	124/11.44	115/10.62	107/9.91
162.2/4.6	153/14.13	146/13.52	140/12.96	129/11.96	120/11.11	112/10.37
169.2/4.8	159/14.75	152/14.11	146/13.52	135/12.48	125/11.59	117/10.82
176.3/5.0	166/15.36	159/14.69	152/14.69	140/13	130/12.07	122/11.27

Area Formula:

Amin is the required minimum room area in ft²/m²
m_c is the actual refrigerant charge in the system oz/kg
m_{REL} is the refrigerant releasable charge in oz/kg (Applicable to the unit with the refrigerant sensor only.)
h_{inst} is the height of the bottom of the appliance relative to the floor of the room after installation.

⚠ WARNING

The minimum room area or minimum room area of conditioned space is based on releasable charge and total system refrigerant charge.

When the unit detects a refrigerant leak, the minimum airflow of the indoor unit is as follows:

Model	Nominal Air Volume
9K	353CFM (600m³/h)
12K	418CFM (710m³/h)
18K	448CFM (760m³/h)
24K	765CFM (1300m³/h)

3.3 Mounting Dimensions

The distance between the mounted indoor unit and the internal ceiling should meet the following specifications.

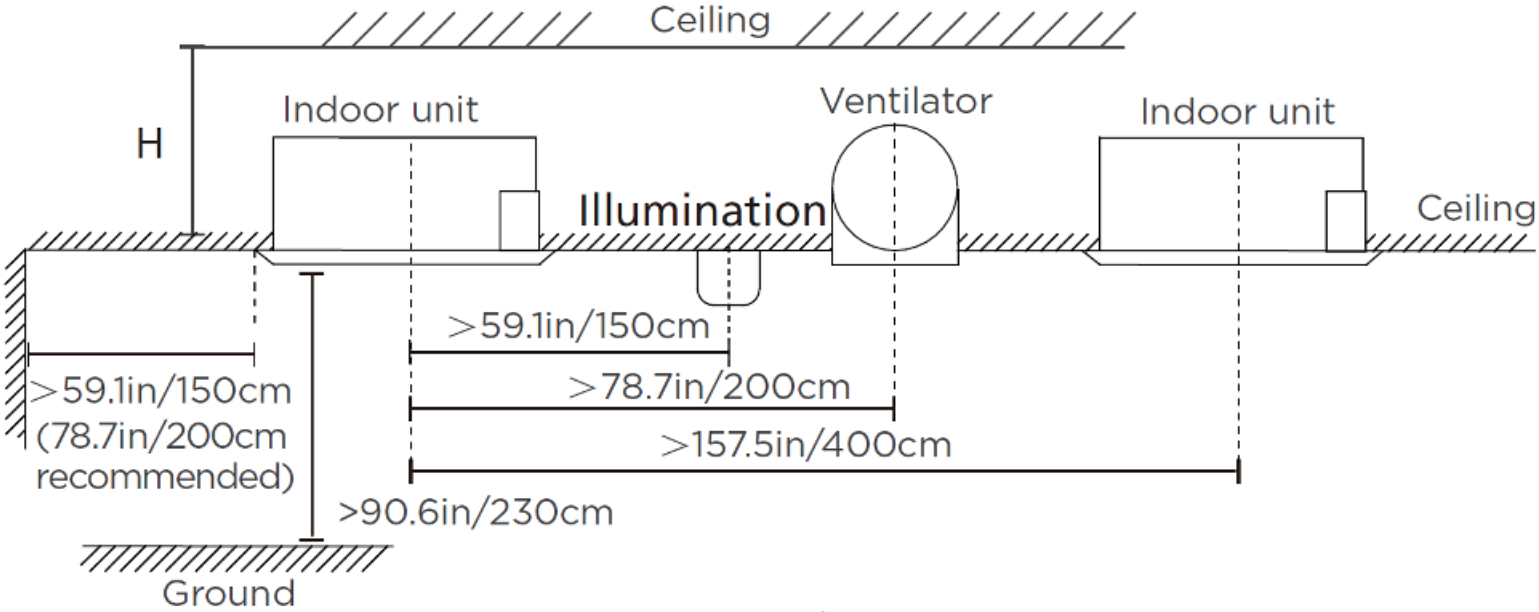

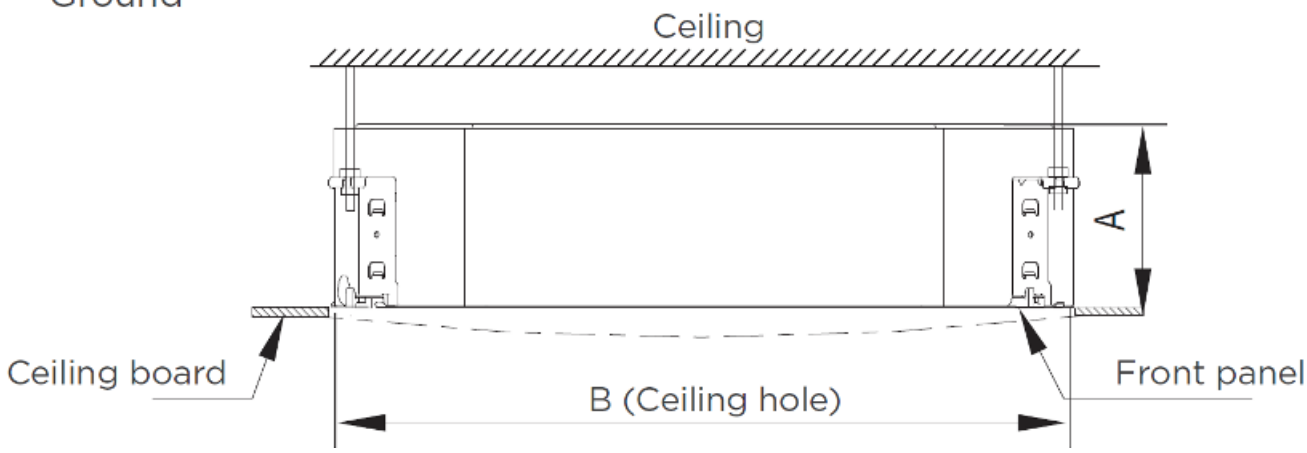

Model	Length of A	Length of H	Length of B
9K/12K/18K	9.6in (245mm)	>10.8in (275mm)	23.6in (600mm)
24K	8.03in (205mm)	9.06in (230mm)	35.4in (900mm)

3.4 Hang Indoor Unit

1. Use the included paper template to cut a rectangular hole in the ceiling, leaving at least 39in (1m) on all sides. The cut hole size should be 16in (40cm) larger than the unit body size. Be sure to mark the areas where ceiling hook holes will be drilled.

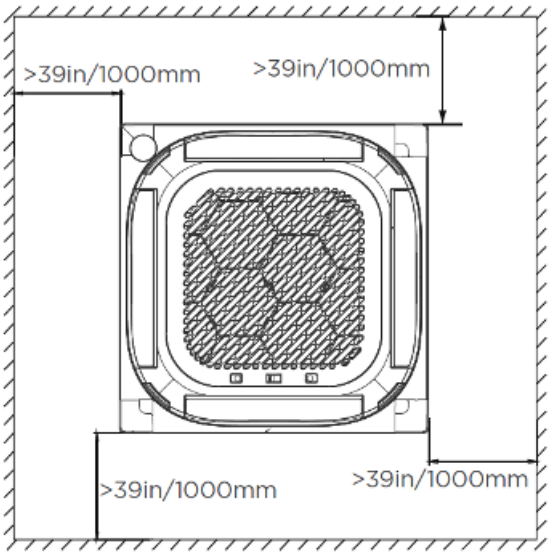

Model: 9K / 12K / 18K

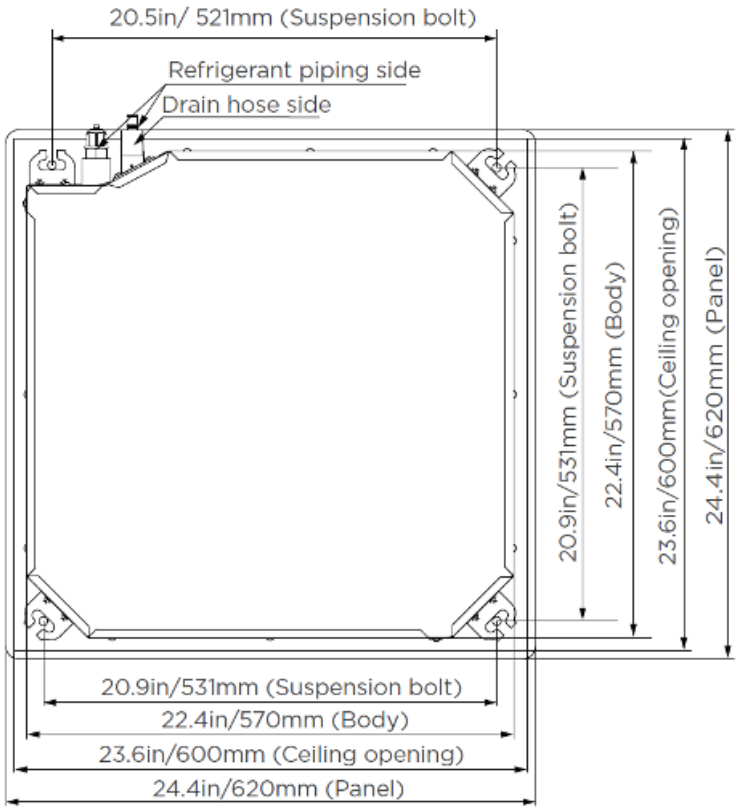

Model: 24K

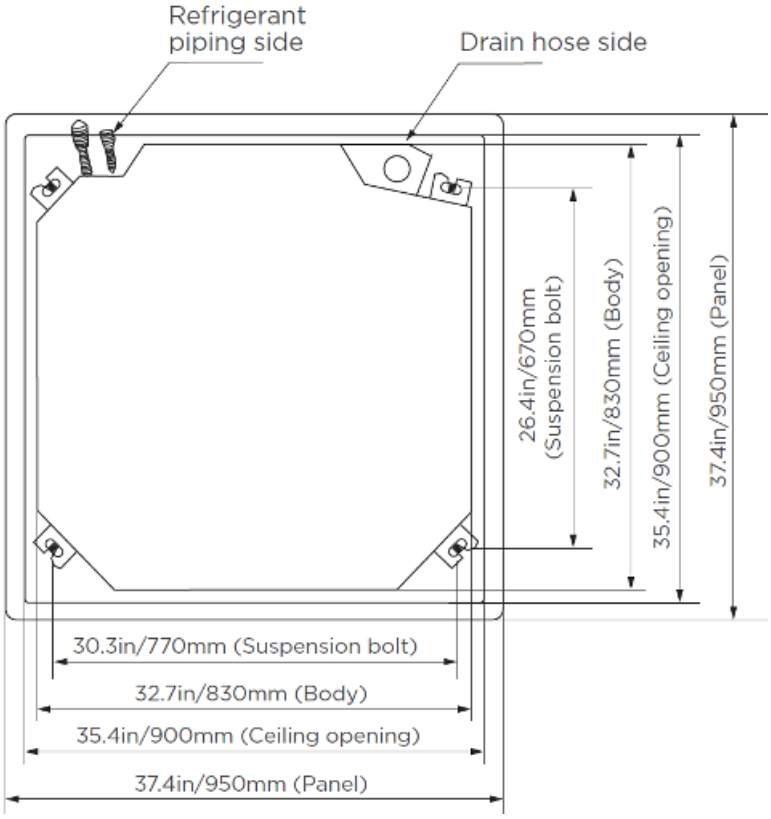

! CAUTION

The unit body should align perfectly with the hole. Ensure that the unit and the hole are the same size before moving on in the installation process.

2. Drill 4 holes at a depth of 4.7in-6.1in (12cm-15.5cm) at the ceiling hook positions in the internal ceiling. Be sure to hold the drill at a 90° angle to the ceiling.
3. Using a hammer, insert the ceiling hooks into the pre-drilled holes. Secure the bolt using the included washers and nuts.
4. Install the four suspension bolts.

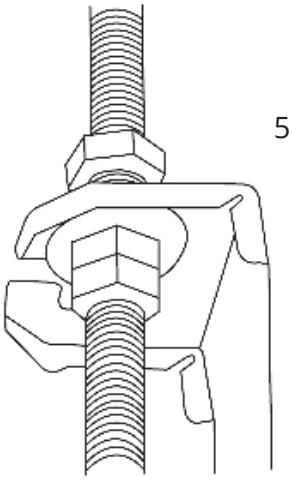

5. Mount the indoor unit. You will need two people to lift and secure it. Insert suspension bolts into the unit's hanging holes. Fasten them using the included washers and nuts.

Note: The bottom of the unit should be 0.4-0.98in (10-25mm) higher than the ceiling board. Generally, L (indicated in the following figure) should be half the length of the suspension bolt or long enough to prevent the nuts from coming off.

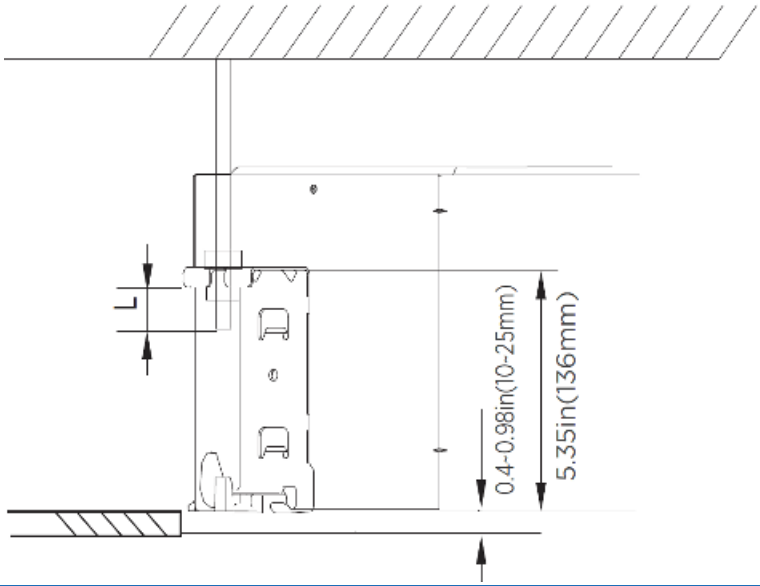

! CAUTION

Ensure that the unit is completely level. Improper installation can cause the drain pipe to back up into the unit or water leakage.
The unit is equipped with a built-in drain pump and float switch. If the unit is tilted against the direction of the condensate flow (the drainpipe side is raised), the float switch may malfunction and cause water to leak.

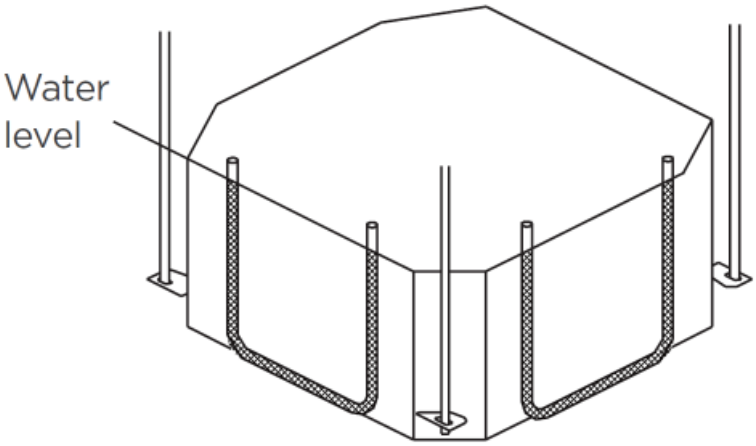

NOTE FOR NEW HOME INSTALLATION

When installing the unit in a new home, the ceiling hooks can be embedded in advance. Make sure that the hooks do not come loose due to concrete shrinkage. After installing the indoor unit, fasten the installation paper template onto the unit with bolts to determine in advance the dimension and position of the opening on the ceiling. Follow the instructions above for the remainder of the installation.

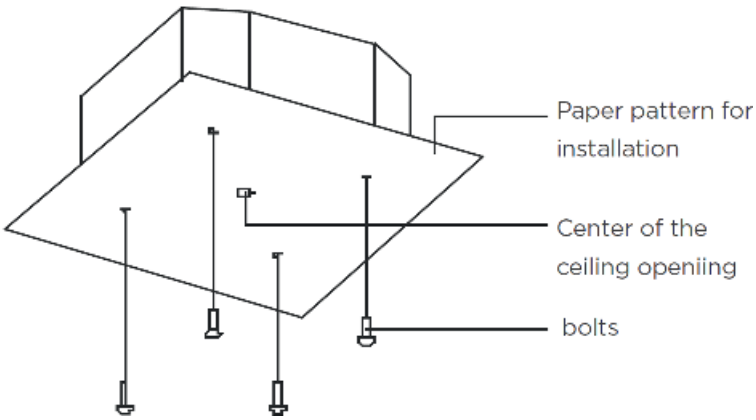

3.5 Drill Wall Opening

1. Determine the location of the wall hole based on the location of the outdoor unit.
2. Drill a hole in the wall. For the 9K, 12K, and 18K models, use a 2.56in (65mm) core drill. For the 24K model, use a 3.54 (90mm) core drill. Make sure that the hole is drilled at a slight downward angle, so that the outdoor end of the hole is lower than the indoor end by about 0.5in (12mm). This will ensure proper water drainage.
3. Place the protective wall cuff in the hole. This protects the edges of the hole and will help seal it when you finish the installation process.

! CAUTION

When drilling the wall hole, make sure to avoid wires, plumbing, and other sensitive components.

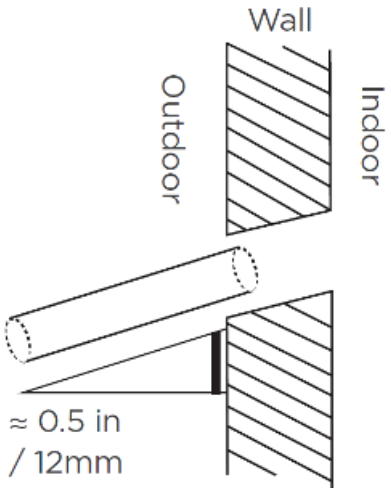

3.6 Drain Hose Connection

The drainpipe is used to drain water away from the unit. Improper installation may cause unit and property damage.

! CAUTION

- Insulate all piping to prevent condensation, which could lead to water damage.
- If the drainpipe is bent or installed incorrectly, water may leak and cause a water-level switch malfunction.
- In Heat mode, the outdoor unit will discharge water. Ensure that the drain hose is placed in an appropriate area to avoid water damage and slippage.
- **DO NOT** pull the drainpipe forcefully. This could disconnect it.

NOTE ON PURCHASING PIPES

Installation requires a polyethylene tube (exterior diameter = 1in (25mm)), which can be obtained at your local hardware store or dealer.

Indoor Drainpipe Installation

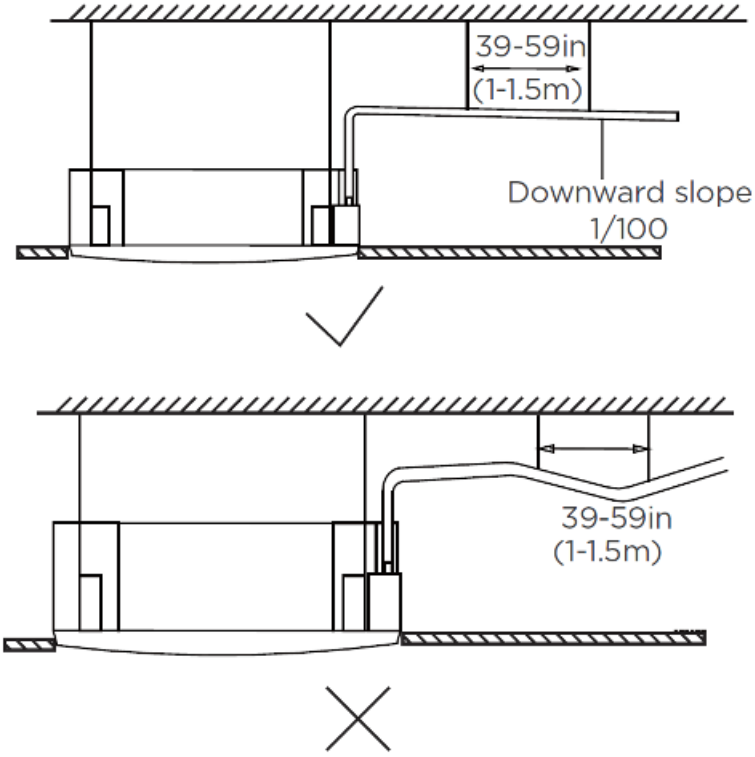

NOTE ON DRAINPIPE INSTALLATION

- When using an extended drainpipe, tighten the indoor connection with an additional protection tube to prevent it from pulling loose.
- The drainpipe should slope downward at a gradient of at least 1/100 to prevent water from flowing back into the unit.
- To prevent the pipe from sagging, space hanging wires every 39-59in (1-1.5m).
- If the outlet of the drainpipe is higher than the body's pump joint, provide a lift pipe for the exhaust outlet of the indoor unit. The lift pipe must be installed no higher than 29.5in (75cm) from the ceiling board and the distance between the unit and the lift pipe must be less than 11.8in (30cm).
- To prevent air bubbles, keep the drain hose level or slightly tiled up. (3in/ <75mm).

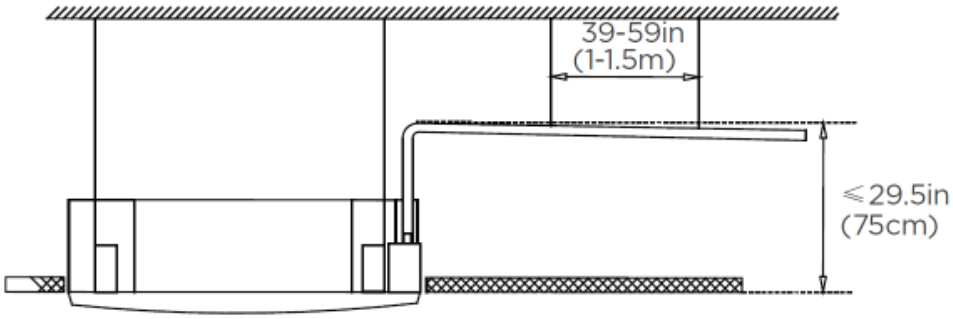

Note: When connecting multiple drainpipes, install the pipes as illustrated in the following figure.

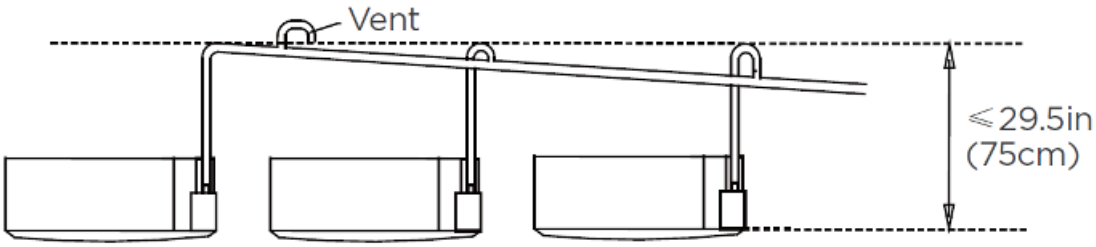

Pass the drain hose through the wall hole. Make sure the water drains to a safe location where it will not cause water damage or a slipping hazard.

Note: The drainpipe outlet should be at least 1.9in (5cm) above the ground. If it touches the ground, the unit may become blocked and malfunction.

Conduit Installation Plate Installation Steps:

1. Fix the sheath connector (not supplied) on the wire hole of the conduit installation plate.
2. Fix the conduit installation plate on the chassis of the unit.

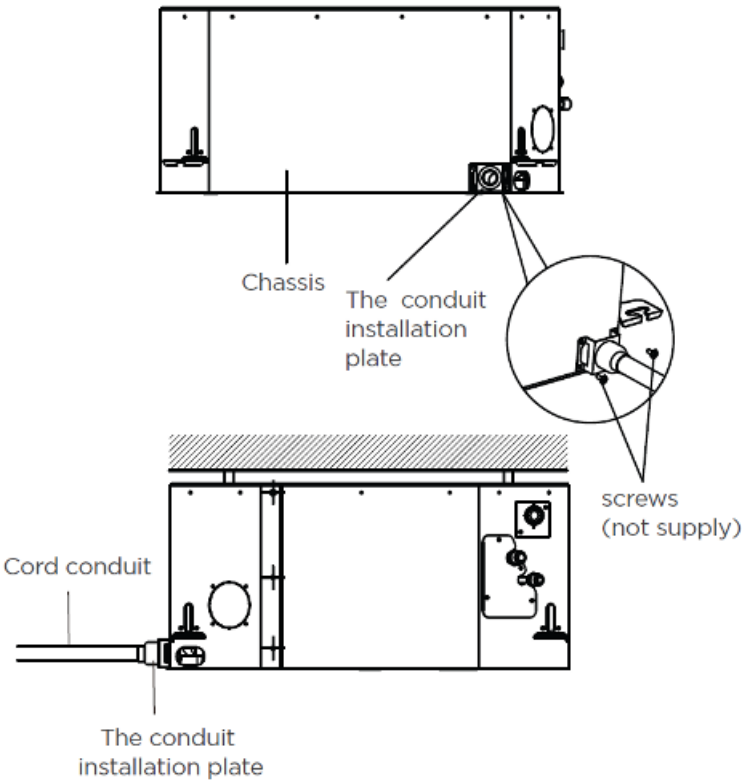

4.1 Installation Location

NOTE: PRIOR TO INSTALLATION

Before installing the outdoor unit, you must choose an appropriate location. The following are standards that will help you choose an appropriate location for the unit.

Proper Installation Locations Meet the Following Standards:

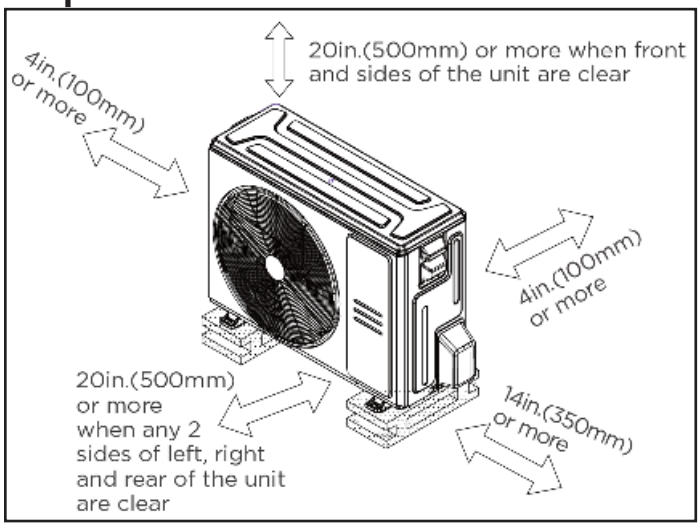

☑ *Meets all spatial requirements shown in Installation requirements above.*

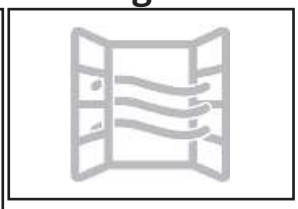

☑ *Good air circulation & ventilation.*

☑ *Firm & solid-the location can support the unit & will not vibrate.*

☑ *Noise from the unit will not disturb other people.*

☑ *Protected from prolonged periods of direct sunlight or rain.*

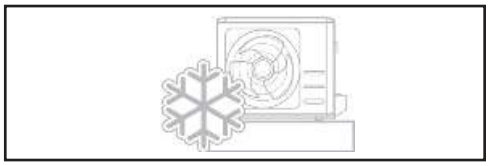

☑ *Where snowfall is anticipated, take appropriate measures to prevent ice buildup & coil damage.*

NOTE: Install the unit by following local codes and regulations. These may differ slightly between different regions.

! CAUTION: SPECIAL CONSIDERATIONS FOR EXTREME WEATHER

If the unit is exposed to heavy wind:
Install the unit so that the air outlet fan is at a 90° angle to the direction of the wind. If needed, build a barrier in front of the unit to protect it from extremely heavy winds.
If the unit is frequently exposed to heavy rain or snow:
Build a shelter above the unit to protect it from the rain or snow. Be careful not to obstruct air flow around the unit.
If the unit is frequently exposed to salty air (seaside):
Use an outdoor unit that is specially designed to resist corrosion.

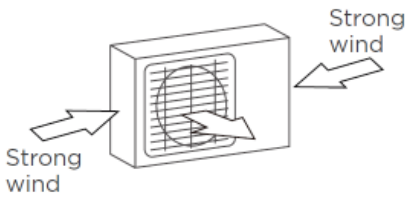

90° angle to the direction of the wind

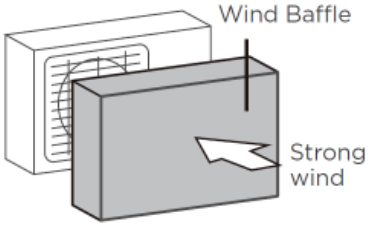

Build a wind baffle to protect the unit.

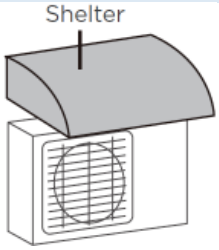

Build a shelter to protect the unit.

DO NOT install the unit in the following locations:

- ⊘ *Near an obstacle that will block air inlets & outlets.*
- ⊘ *Near a public street, crowded areas, or where noise from the unit will disturb others.*
- ⊘ *In a location exposed to excessive amounts of salty air.*
- ⊘ *Near animals or plants that will be harmed by hot air discharge.*
- ⊘ *Near any source of combustible gas.*
- ⊘ *In a location exposed to large amounts of dust.*

4.2 Drain Joint Installation

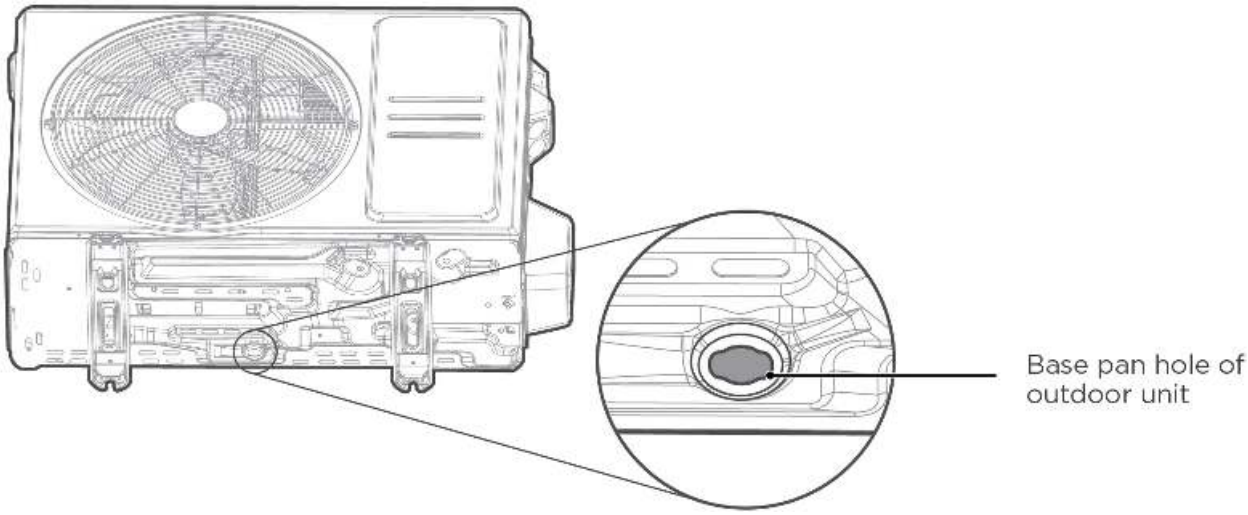

Step 1:
Find the base pan hole on the outdoor unit.

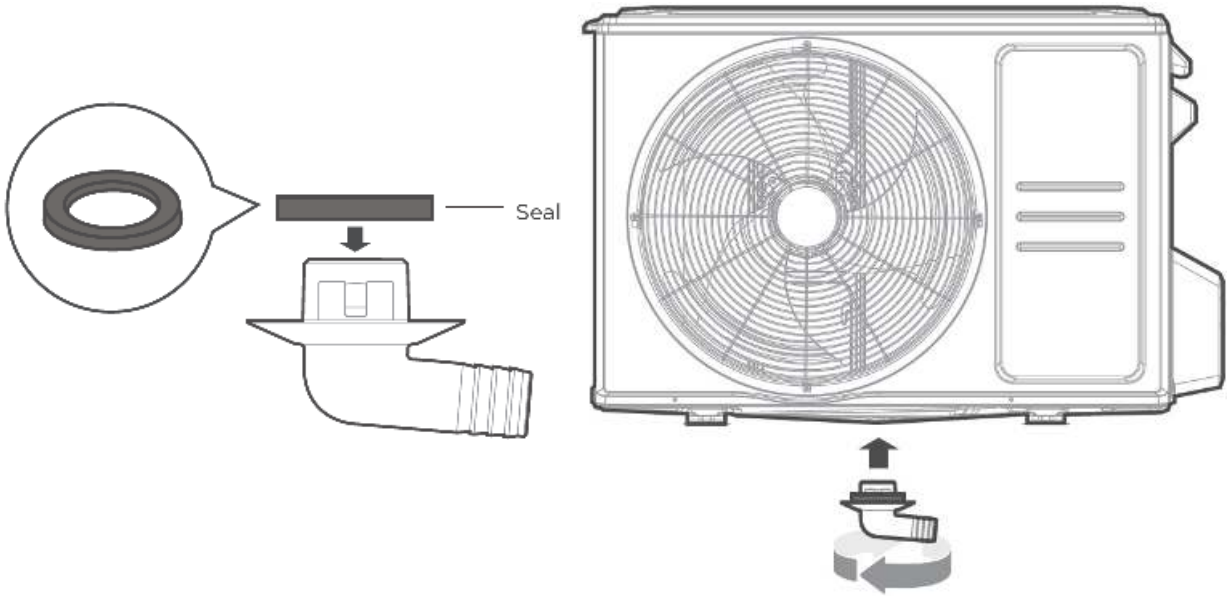

Step 2:
- Fit the rubber seal on the end of the drain joint that will connect to the outdoor unit.
- Insert the drain joint into the hole in the base pan of the unit.
- Connect a drain hose extension (not included) to the drain joint to redirect water from the unit during heating mode.

NOTE: In cold climates, ensure that the drain hose is as vertical as possible to ensure swift water drainage. If water drains too slowly, it can freeze in the hose and flood the unit.

4.3 Anchor Outdoor Unit

⚠ WARNING

When drilling into concrete, eye protection is recommended at all times.

- The outdoor unit can be anchored to the ground or to a wall-mounted bracket with bolts (M10). Prepare the installation base on the unit according to the dimensions below.
- The following is a list of different outdoor unit sizes and the distance between their mounting feet. Prepare the installation base of the unit according to the dimensions below.

Front View

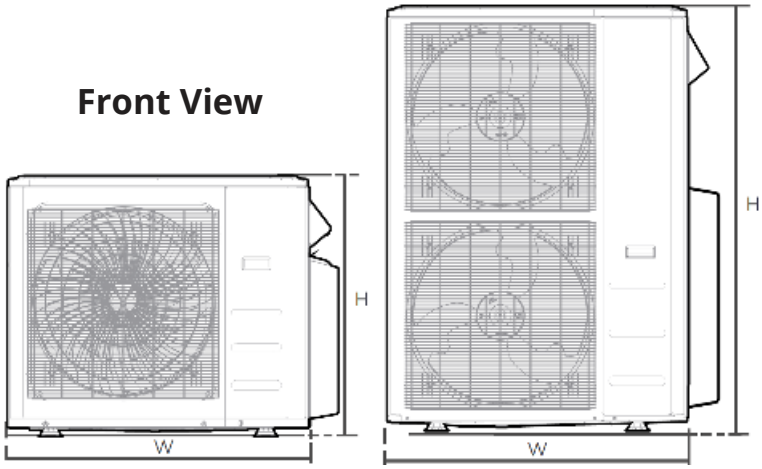

Top View

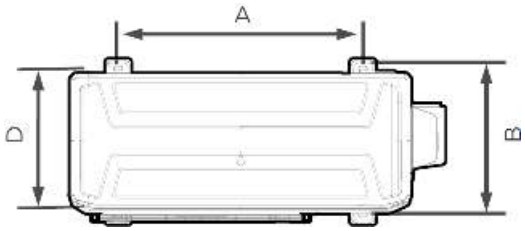

Outdoor Unit Model	Outdoor Unit Dimensions W x H x D	Mounting Dimensions	
		Distance A	Distance B
MULTI3-18HP230C-O	35.0in x 26.5in x 13.5in (890mm x 673mm x 342mm)	26.1in (663mm)	13.9in (354mm)
MULTI4-27HP230C-O	37.2in x 31.9in x 16.14in (946mm x 810mm x 410mm)	26.5in (673mm)	15.87in (403mm)
MULTI5-36HP230C-O			
MULTI6-48HP230C-O	37.5in x 52.5in x 16.34in (952mm x 1333mm x 415mm)	24.96in (634mm)	15.9in (404mm)

Rows of Series Installation

The relations between H, A, and L are as follows:

	L	A
L ≤ H	L ≤ 1/2H	9.8in (250mm) or more
	1/2H < L ≤ H	11.8in (300mm) or more
L > H	Cannot be installed	

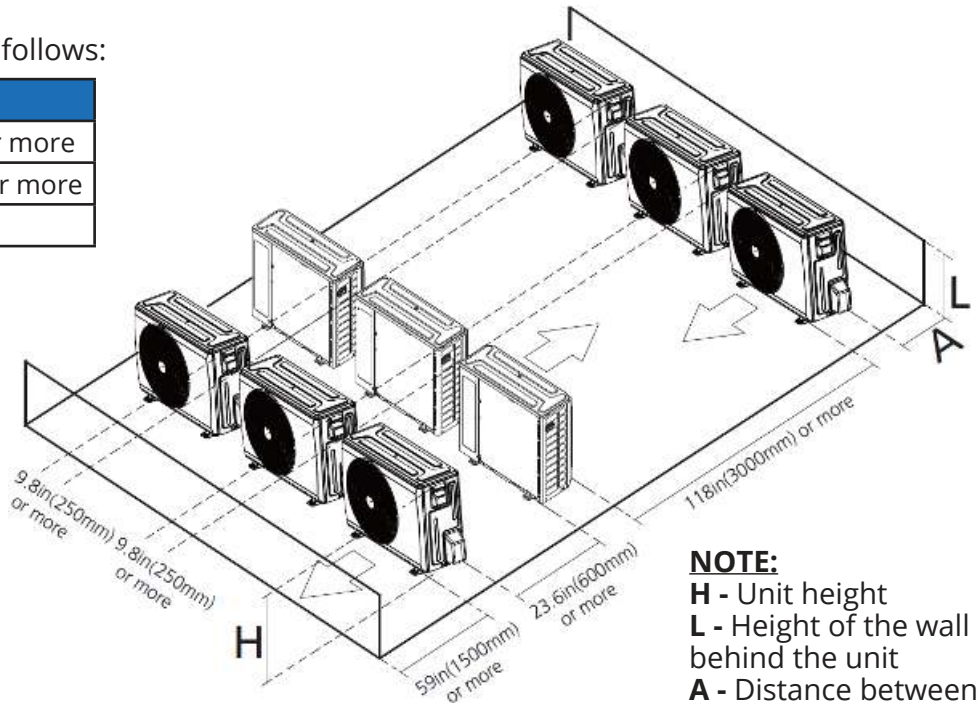

NOTE:
H - Unit height
L - Height of the wall behind the unit
A - Distance between the unit and wall

5 REFRIGERANT PIPING CONNECTION

5.1 Pipe Length & Elevation

When connecting refrigerant piping, DO NOT let substances or gases other than the specified refrigerant enter the unit. The presence of other gases or substances will lower the unit's capacity, and can cause abnormally high pressure in the refrigeration cycle. This can cause explosion and injury.

Notes on Pipe Length and Elevation:

Maximum Length & Drop Height Based on Models		
Model	**Length of Piping**	**Maximum Drop Height**
9K/12K	82ft / 25m	49.2ft / 15m
18K	98.4ft / 30m	65.6ft / 20m
24K	164ft / 50m	82ft / 25m

Ensure that the length of the refrigerant pipe, the number of bends, and the drop height between the indoor and outdoor units meets the requirements shown in the table.

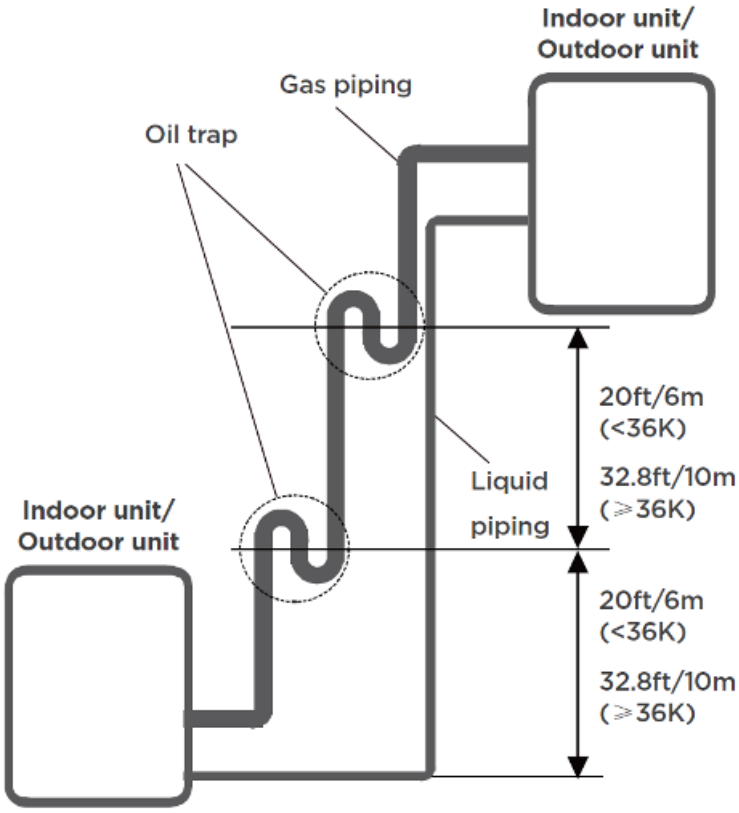

! CAUTION

Oil Traps
If oil flows back into the outdoor unit's compressor, this might cause liquid compression or deterioration of oil return. Oil traps in the rising gas piping can prevent this.
An oil trap should be installed every 20ft (6m) of vertical suction line riser (<36K). An oil trap should be installed every 32.8ft (10m) of vertical suction line riser (≥36K).

5.2 Connection Instructions

! CAUTION

- The branching pipe must be installed horizontally. An angle of more than 10° may cause malfunction.
- **DO NOT** install the connecting pipe until both indoor and outdoor units have been installed.
- Insulate both the gas and liquid piping to prevent condensation.

Step 1: Cut Pipes
When preparing refrigerant pipes, take extra care to cut and flare them properly. This will ensure efficient operation and minimize the need for future maintenance.

1. Measure the distance between indoor and outdoor units.
2. Using a pipe cutter, cut the pipe a little longer than the measured distance.
3. Make sure that the pipe is cut at a perfect 90° angle.

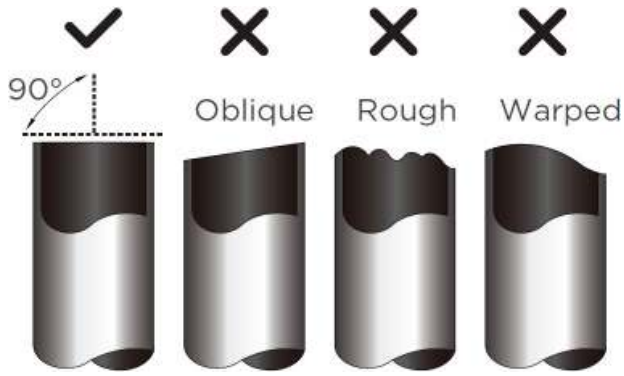

DO NOT DEFORM PIPE WHILE CUTTING

Take extra precautions to not damage or deform the pipe while cutting. This will drastically reduce the heating efficiency of the unit.

Step 2: Remove Burrs

Burrs can affect the air-tight seal of refrigerant piping connection. They must be completely removed.

1. Hold the pipe at a downward angle to prevent burrs from falling into the pipe.
2. Using a reamer or deburring tool, remove all burrs from the cut section of the pipe.

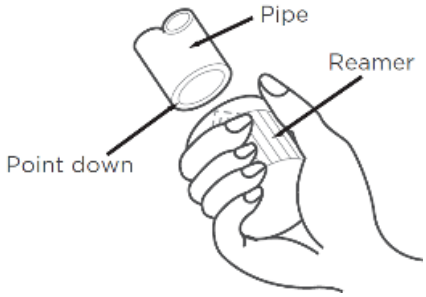

Step 3: Flare Pipe Ends

Proper flaring is essential to achieve an airtight seal.

1. After removing burrs from the cut pipe, seal the ends with PVC tape to prevent foreign materials from entering the pipe.
2. Sheath the pipe with insulating material.
3. Place flare nuts on both ends of the pipe. Make sure they are facing in the right direction. **Note:** You can not put them on or change their direction after flaring.
4. When ready to perform flaring work, remove PVC tape from the ends of the pipe.

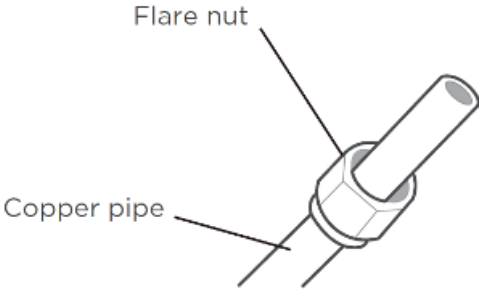

5. Clamp flare form on the end of the pipe. The end of the pipe must extend beyond the edge of the flare form in accordance with the dimensions shown in the table below.

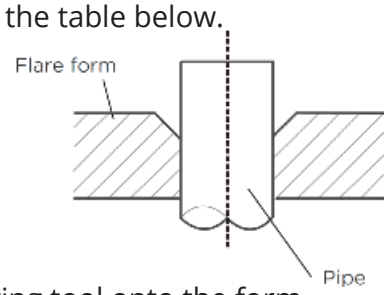

6. Place flaring tool onto the form.
7. Turn handle of the flaring tool clockwise until the pipe is fully flared.
8. Remove the flaring tool and flare form, then inspect the end of the pipe for cracks and even flaring.

Piping Extension Beyond Flare Form

Pipe Gauge	Tightening Torque	Flare Dimension (A)
Ø1/4in (Ø6.35mm)	18~20N.m (180~200kgf.cm)	0.33~0.34in (8.4~8.7mm)
Ø3/8in (Ø9.52mm)	32~39N.m (320~390kgf.cm)	0.52~0.53in (13.2~13.5mm)
Ø1/2in (Ø12.7mm)	49~59N.m (490~590kgf.cm)	0.64~0.65in (16.2~16.5mm)
Ø5/8in (Ø16mm)	57~71N.m (570~710kgf.cm)	0.76~0.78in (19.2~19.7mm)
Ø3/4in (Ø19mm)	67~101N.m (670~1010kgf.cm)	0.91~0.93in (23.2~23.7mm)

Flare Shape

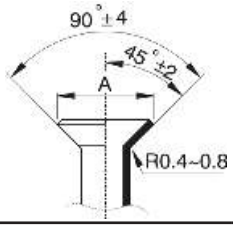

Step 4: Connect Pipes

Connect the copper pipes to the indoor unit first, then connect it to the outdoor unit. You should first connect the low-pressure pipe, then the high-pressure pipe.

1. When connecting the flare nuts, apply a thin coat of refrigeration oil to the flared ends of the pipes.
2. Align the center of the two pipes that you will connect.

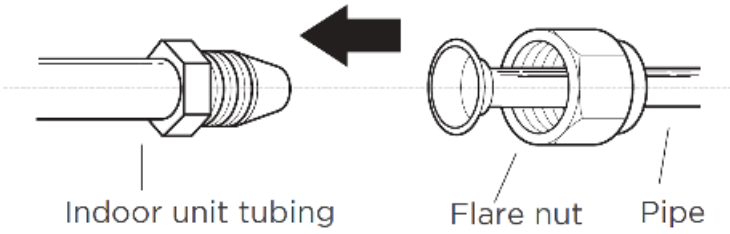

3. Tighten the flare nut snugly by hand.
4. Using a wrench, grip the nut on the unit tubing.
5. While firmly gripping the nut, use a torque wrench to tighten the flare nut according to the torque values in above tables.

NOTE: Use both a crescent and a torque wrench when connecting or disconnecting pipes to/from the unit.

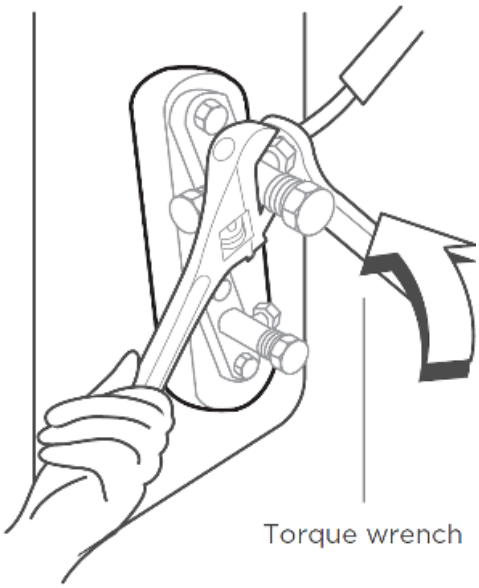

! CAUTION

- Be sure to wrap insulation around the piping. Direct contact with the bare piping may result in burns or frostbite.
- Make sure the pipe is properly connected. Over-tightening may damage the bell mouth and under-tightening may lead to leakage.

NOTICE-MINIMUM BEND RADIUS

Carefully bend the tubing in the middle according to the diagram below. DO NOT bend the tubing more than 90° or more than 3 times.

Use appropriate tool

min-radius 10cm(3.9″)

- After connecting the copper pipes to the indoor unit, wrap the power cable, signal cable, and the piping together with binding tape.

NOTICE

DO NOT intertwine or cross the signal cable with any other wiring.

6.1 Wiring Precautions

WARNING

Before performing any electrical work, read the following warnings.

1. All wiring must comply with local and national electrical codes, regulations, and must be installed by a licensed electrician.
2. All electrical connections must be made according to the electrical connection diagram located on the panels of the indoor and outdoor units
3. If there is a serious safety issue with the power supply, stop work immediately. Explain your reasoning to the client, and refuse to install the unit until the safety issue has been resolved properly.
4. Power voltage should be within 90-110% of rated voltage. Insufficient power supply can cause malfunction, electrical shock, or fire.
5. Installation of an external surge suppressor at the outdoor disconnect is recommended.
6. If connecting power to fixed wiring, a switch or circuit breaker that disconnects all poles and has a contact separation of at least 1/8in (3mm) must be incorporated in the fixed wiring. The qualified technician must use an approved circuit breaker or switch.
7. Only connect the unit to an individual branch circuit outlet. Do not connect another appliance to that outlet.
8. Make sure to properly ground the unit.
9. Every wire must be firmly connected. Loose wiring can cause the terminal to overheat, resulting in product malfunction and possible fire.
10. Do not let wires touch or rest against refrigerant tubing, the compressor, or any moving parts within the unit.
11. To avoid getting an electric shock, never touch the electrical components soon after the power supply has been turned off. After turning off the power, always wait 10 minutes or more before you touch the electrical components.
12. Make sure not to cross your electrical wiring with your signal wiring. This may cause distortion, interference, or possibly damage to the circuit boards.
13. No other equipment should be connected to the same power circuit.
14. Connect the outdoor wires before connecting the indoor wires.

WARNING

Before performing any electrical or wiring work, turn off the main power to the system.

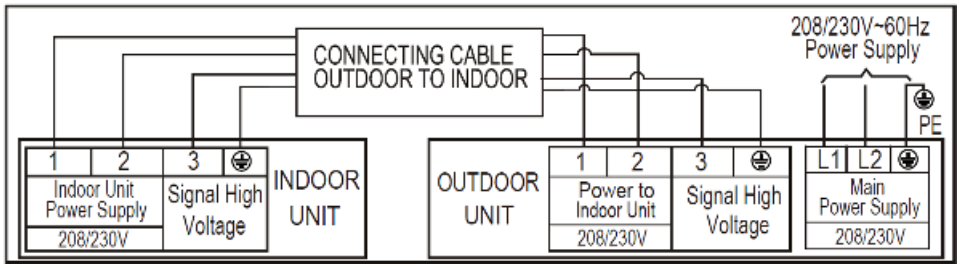

Connection Diagram
(9K / 12K / 18K / 24K)

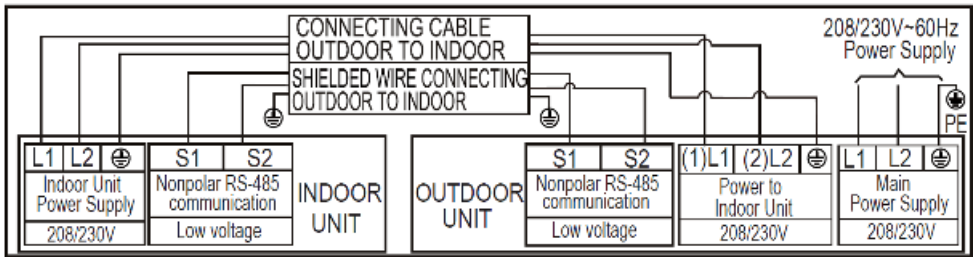

Connection Diagram
(36K / 48K)

NOTE ON CIRCUIT BREAKER:
When the maximum current of the unit is more than 16A, a circuit breaker or leakage protection switch with protective device shall be used (purchased separately). When the maximum current of the air conditioner is less than 16A, the power cord of the unit shall be equipped with a plug (purchased separately). In North America, the appliance should be wired according to the NEC and CEC requirements.

NOTE:
The illustrations are for explanatory purposes only. Your unit may be slightly different. The actual shape shall prevail.

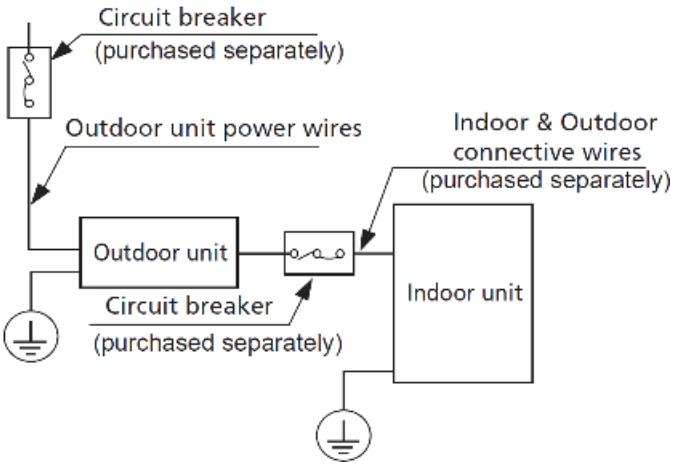

6.2 Outdoor Unit Wiring

1. Prepare cable for connection.
   a. Choose the right cable size.
   The size of the power supply cable, signal cable, fuse, and switch needed is determined by the maximum current of the unit. Refer to the nameplate to choose the right cable, fuse, and switch.
   NOTE: In North America, please choose the right cable size according to the Minimum Circuit Ampacity indicated on the nameplate of the unit.
   b. Using wire strippers, strip the rubber jacket from both ends of the signal cable to reveal approximately 5.9in. (150mm) of wire.
   c. Strip the insulation from the ends.
   d. Using a wire crimper, crimp u-lugs on the ends.

NOTE:
When connecting the wires, strictly follow the wiring diagram found inside the electrical box cover.

2. Remove the 2 screws fixed on the front panel and side panel, then take it down to perform wire connection (See figure of Outdoor Unit A). Unscrew the electrical wiring cover and remove it (See figure of Outdoor Unit B).
3. Connect the u-lugs to the terminals. Match the wire colors/labels with the labels of each wire to its corresponding terminal.
4. Clamp down the cable with the cable clamp.
5. Insulate unused wires with electrical tape. Keep them away from any electrical or metal parts.
6. Reinstall the cover of the electric control box.

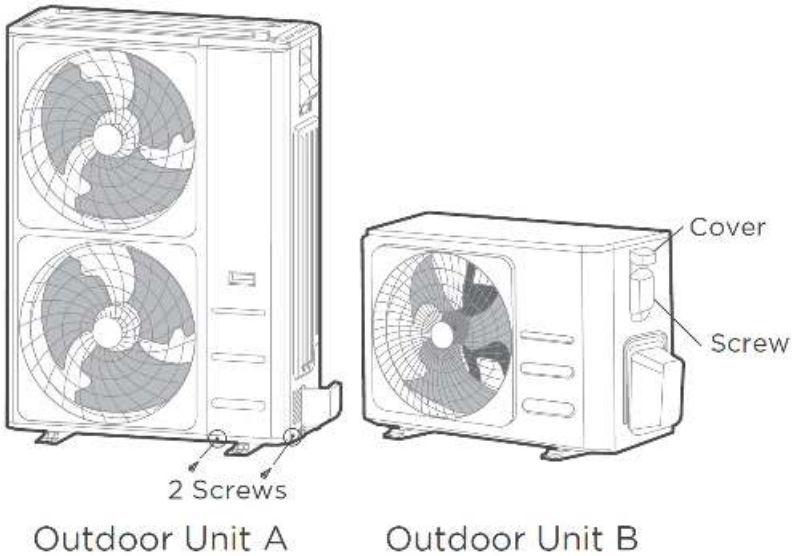

6.3 Indoor Unit Wiring

1. Prepare cable for connection.
   a. Using wire strippers, strip the rubber jacket from both ends of the signal cable to reveal approximately 5.9in (150mm) of wire.
   c. Strip the insulation from the ends.
   d. Using a wire crimper, crimp u-lugs on the ends.
2. Open the front panel of the indoor unit. Using a screwdriver, remove the cover of the electric control box on your indoor unit.
3. Thread the power cable and signal cable through the wire outlet.
4. Connect the u-lugs to the terminals. Match the wire colors/labels with the labels on the terminal block. Firmly screw the u-lug of each wire to its corresponding terminal. Refer to the Serial Number and Wiring Diagram located on the cover of the electric control box.

! CAUTION

- While connecting the wires, strictly follow the wiring diagram.
- The refrigerant circuit can become very hot. Keep the interconnection cable away from the copper tube.

5. Clamp down the cable with the cable clamp. The cable must not be loose or pull on the u-lugs.
6. Reattach the electric box cover.

9K-18K Models:

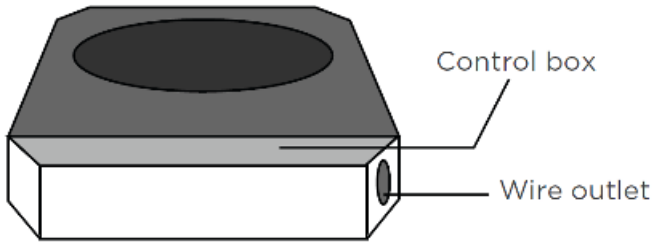

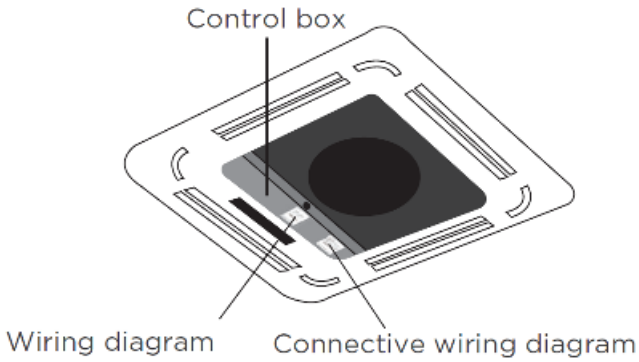

Magnetic Ring

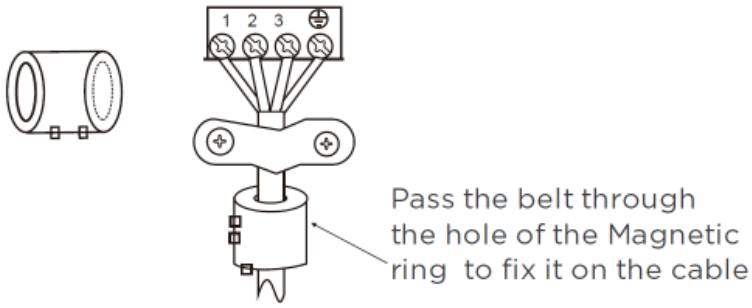

24K Models:

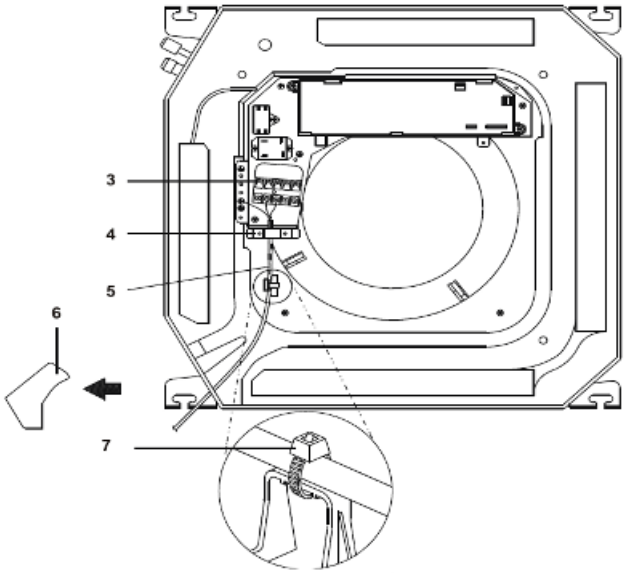

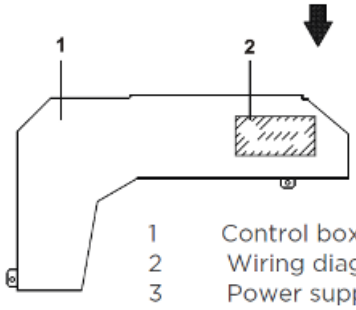

1 Control box lid
2 Wiring diagram label
3 Power supply terminal block
4 Clamp for wiring
5 Wiring between units
6 Plastic cover
7 Clamp (field supply)

NOTE: The actual shape of your unit may be slightly different. The actual shape shall prevail.

7.1 Evacuation Instructions

Note: Air and foreign matter in the refrigerant circuit can cause abnormal rises in pressure, which can damage the unit, reduce efficiency, and cause injury. Make sure to evacuate the air inside the indoor unit and pipes with vacuum pump. Use a vacuum pump and manifold gauge to evacuate the refrigerant circuit, removing any non-condensible gas and moisture from the system. Evacuation should be performed upon initial installation, and during unit relocation. Incorrect installation due to ignoring instructions will cause serious problems with the unit.

BEFORE PERFORMING EVACUATION

1. Make sure the connective pipes between the indoor and outdoor units are connected properly.
2. Check to ensure all wiring is connected properly.

1. Connect the charge hose of the manifold gauge to service port on the outdoor unit's low pressure valve.
2. Connect another charge hose from the manifold gauge to the vacuum pump.
3. Open the Low Pressure side of the manifold gauge. Keep the High Pressure side closed.
4. Turn on the vacuum pump to evacuate the system.
5. Run the vacuum for at least 15 minutes, or until the compound meter reads -76cmHG (-10^5Pa).
6. Close the Low Pressure side of the manifold gauge, then turn off the vacuum pump.
7. Wait for 5 minutes, then check that there has been no change in system pressure.
8. If there is a change in system pressure, refer to Gas Leak Check section for information on how to check for leaks.
9. If there is no change in system pressure, unscrew the cap from the packed valve (High Pressure Valve). Insert hexagonal wrench into the packed valve (high pressure valve) and open the valve by turning the wrench in a 1/4 counterclockwise turn. Listen for gas to exit the system, then close the valve after 5 seconds.
10. Watch the Pressure Gauge for one minute to make sure that there is no change in pressure. The pressure gauge should read slightly higher than atmospheric pressure.
11. Remove the charge hose from the service port.
12. Using a hexagonal wrench, fully open both the high pressure and low pressure valves.
13. Tighten valve caps on all three valves (service port, high pressure, low pressure) by hand. You may tighten it further by using a torque wrench if needed.

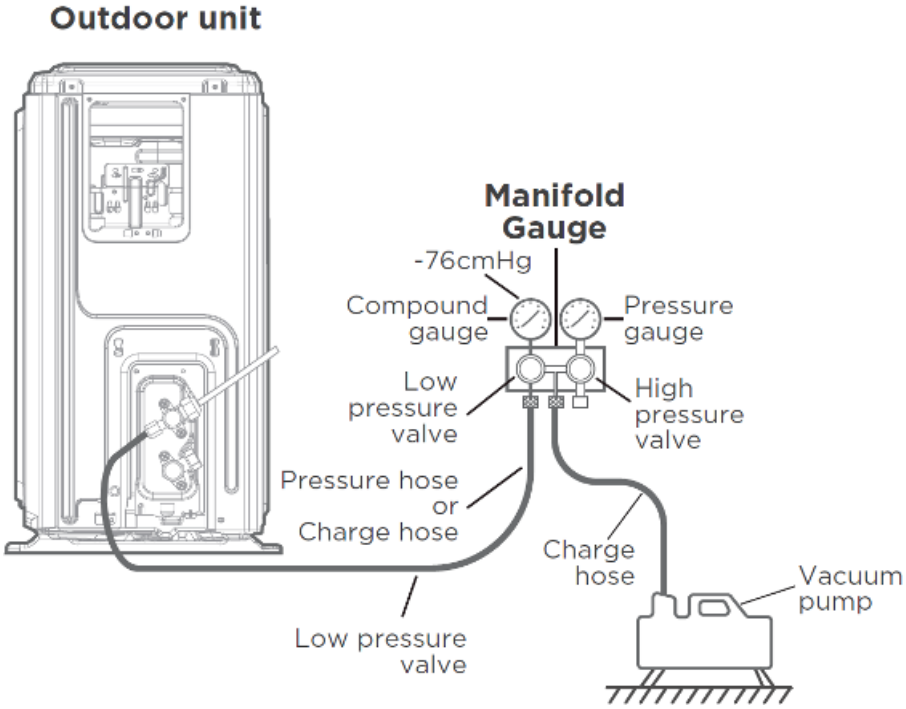

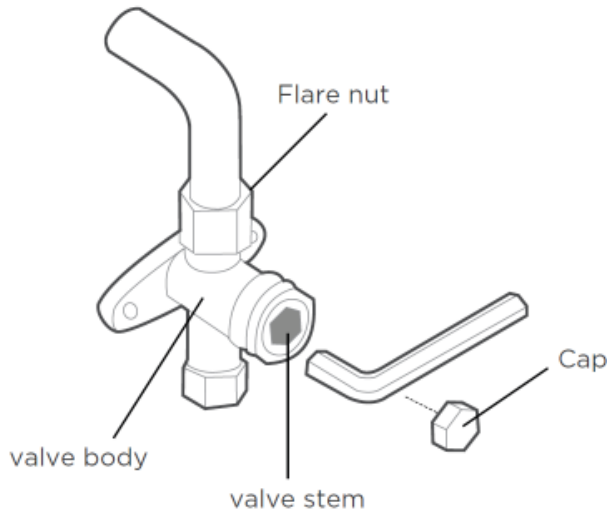

7.2 Adding Refrigerant

! CAUTION

DO NOT mix refrigerant types.

Some systems require additional charging depending on pipe lengths. In North America, the standard pipe length is 25ft (7.5m). The refrigerant should be charged from the service port on the outdoor unit's low pressure valve. The additional refrigerant to be charged can be calculated using the following formula:

Additional Refrigerant Per Pipe Length

Liquid Side Diameter		
Ø1/4in (Ø6.35mm)	Ø3/8in (Ø9.52mm)	Ø1/2in (Ø12.7mm)
(Pipe Length - Standard Length) x 0.16oz/ft (Pipe Length - Standard Length) x 15g/m	(Pipe Length - Standard Length) x 0.32oz/ft (Pipe Length - Standard Length) x 30g/m	(Pipe Length - Standard Length) x 0.69oz/ft (Pipe Length - Standard Length) x 65g/m

8.1 Panel Installation Steps

! CAUTION

DO NOT place the panel face down on the floor, against a wall, or on uneven surfaces.

Step 1: Remove the Front Grille

1. Push both of the tabs toward the middle simultaneously to unlock the hook on the grill.

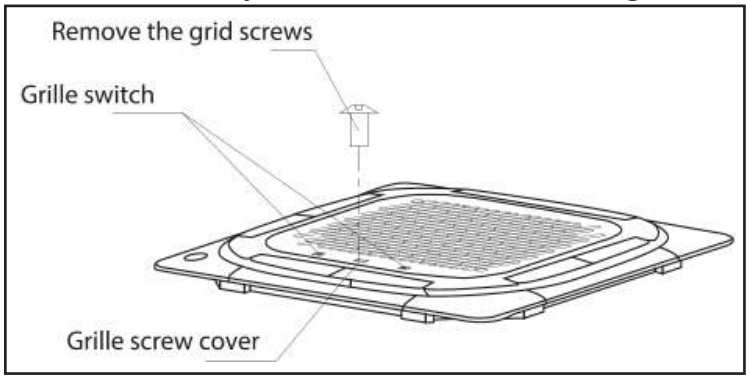

2. Hold the grille at a 45° angle, lift it up slightly and detach it from the main body.

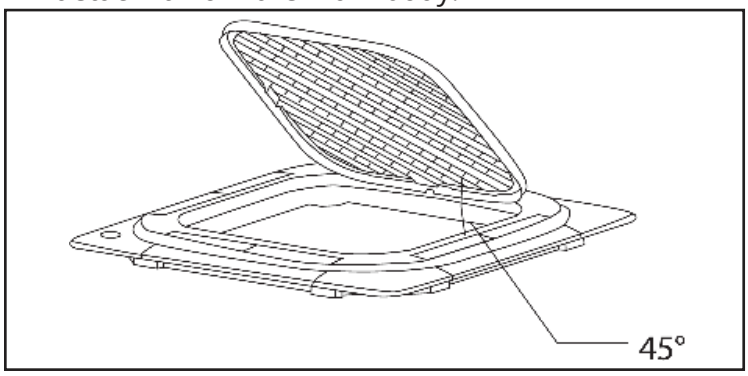

Step 2: The panel hook is pre-hung to the indoor unit flow guide ring, as shown.

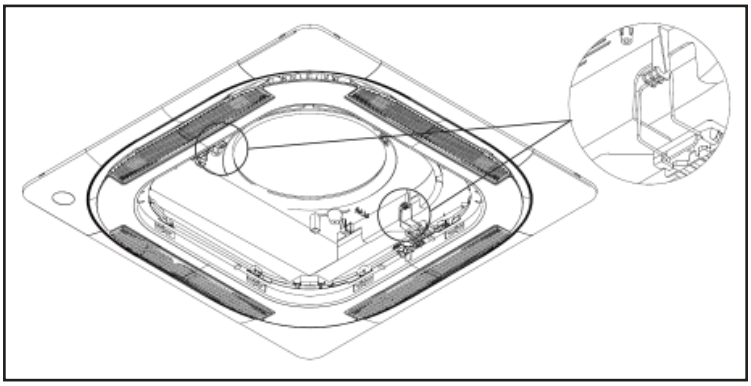

Step 3: Install the panel with 4 screws (M5), as shown.

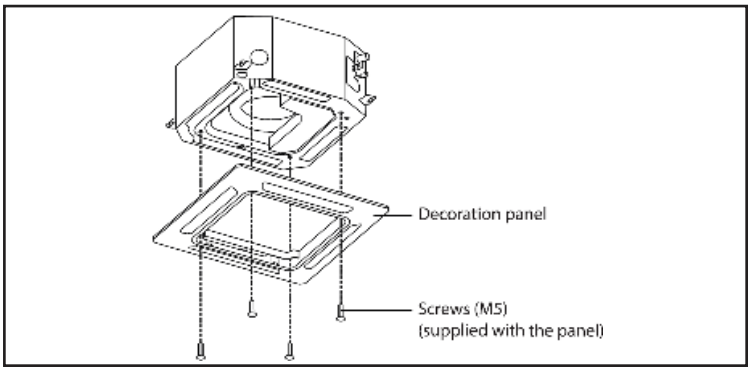

NOTE: If the height of the indoor unit needs to be adjusted, you can do so through the openings at the panel's four corners. Make sure that the internal wiring and drainpipe are not affected by this adjustment.

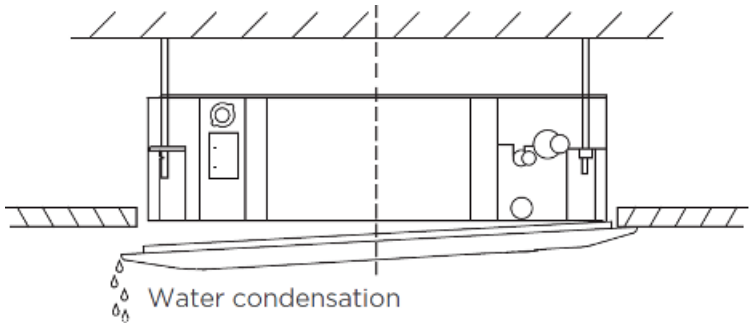

! CAUTION

Failure to tighten screws can cause water leakage.

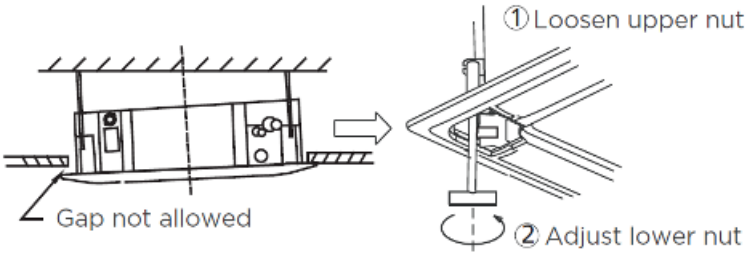

! CAUTION

If the unit is not hung correctly and a gap exists, the unit's height must be adjusted to ensure proper function. The unit's height can be adjusted by loosening the upper nut, and adjusting the lower nut.

Hang the intake grille on the panel, and then connect the lead connectors of the louver motor and the control box on the panel to the corresponding connectors of the main body.

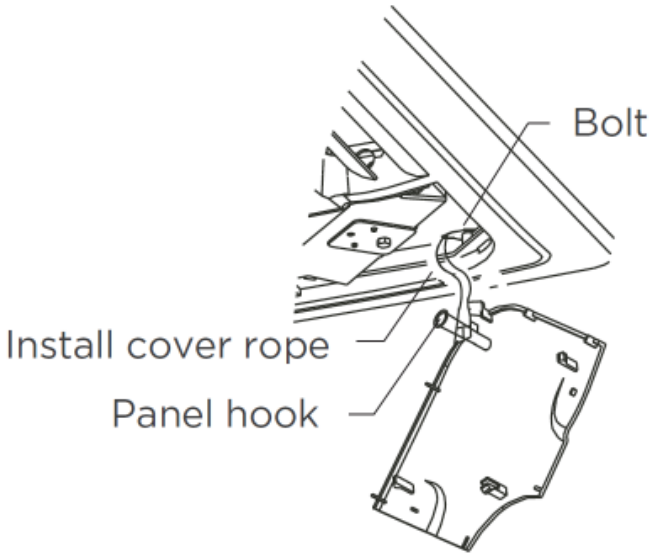

Close and reinstall the grille.

Reinstall the installation cover.

Fix the installation cover plate rope to the pillar of the installation cover plate, and gently press the installation cover plate into the panel.

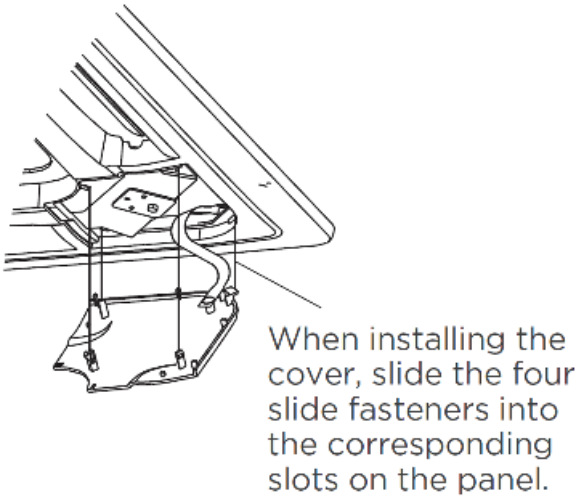

NOTE: After installation, the connector ends of the display, swing, water pump, and other wire bodies must be placed in the electric control box.

	Cool Mode	Heat Mode
Room Temperature	60°F-90°F (16°C-32°C)	32°F-86°F (0°C-30°C)
Outdoor Temperature	-22°F-122°F (-30°C-50°C)	-22°F-75°F (-30°C-24°C)

9.1 Test Run

Before Test Run

A test run must be performed after the entire system has been completely installed. Complete and confirm the list of checks before performing a test run.

Before Test Run Checkpoints
The indoor & outdoor units are properly installed.
Piping and wiring are properly connected.
No obstacles near the inlet and outlet of the unit that might cause poor performance or product malfunction.
The refrigeration system does not leak.
Drainage system is unimpeded and draining to a safe location.
The heating insulation is properly installed.
The grounding wires are properly connected.
The length of the piping and additional refrigerant stow capacity have been recorded.
The power voltage is the correct voltage for the unit.

Test Run Instructions

You should perform the Test Run for at least 30 minutes.

1. Open both the liquid and gas stop valves.
2. Turn on the main power switch and allow the unit to warm up.
3. Press the **Mode** button to scroll through the following functions, one at a time:
   - **COOL -** Select the lowest possible temperature
   - **HEAT -** Select the highest possible temperature
4. Let each function run for 5 minutes and then perform the checks listed in the tables below.

Indoor Unit Checks:
Ensure the remote control and its buttons work properly.
Ensure the louvers move properly and can be changed using the remote control.
Double-check to see if the room temperature is being registered correctly.
Ensure the indicators on the remote control and the display panel on the indoor unit work properly.
Ensure the manual buttons on the indoor unit works properly.
Check to see that the drainage system is unimpeded and draining smoothly.
Ensure there is no vibration or abnormal noise during operation.

Outdoor Unit Checks:
Check to see if the refrigeration system is leaking.
Make sure there is no vibration or abnormal noise during operation.
Ensure the wind, noise, and water generated by the unit do not disturb your neighbors or pose a safety hazard.

Drainage Test:
Ensure the drainpipe flows smoothly. New buildings should perform this test before finishing the ceiling.
Remove the test cover. Add 2,000ml of water to the tank through the attached tube.
Turn on the main power switch and run the unit in Cool mode.
Listen to the sound of the drain pump to see if it makes any unusual noises.
Check to see that the water is discharged. It may take up to one minute before the unit begins to drain depending on the drainpipe.
Make sure that there are no leaks in any of the piping.
Stop the unit. Turn off the main power switch and reinstall the test cover.

NOTE: If the unit malfunctions or does not operate according to your expectations, refer to the troubleshooting section of this manual before calling customer service.

9.2 Care & Maintenance

CAUTION

- Make sure to clean the filter every two weeks. A clogged unit can negatively affect the cooling efficiency of the unit and your health.
- Always turn off the unit and disconnect its power supply before cleaning or maintenance.
- Only use a soft, dry cloth to wipe the unit clean. You can use a cloth soaked in warm water to wipe it clean if the unit is especially dirty.
- Do not use chemicals or chemically treated cloths to clean the unit.
- Do not use benzene, paint thinner, polishing powder, or other solvents to clean the unit. They can cause the plastic surface to crack or deform.
- Do not use water hotter than 104°F (40°C) to clean the front panel. This can cause the panel to deform or become discolored.

Cleaning the Air Filter

WARNING

Removing and cleaning the filter can be dangerous. Removal and maintenance must be performed by a certified technician.

Step 1:
Remove the air filter.

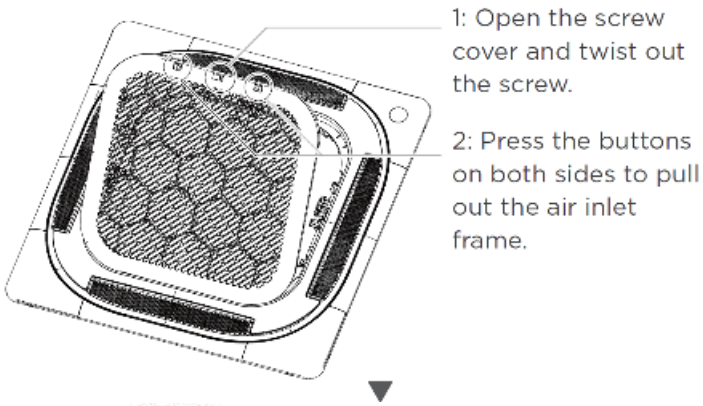

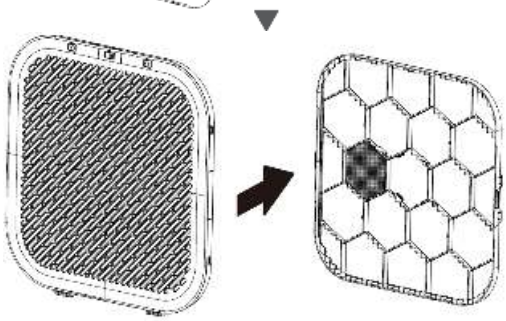

Separate the frame from the filter assembly.

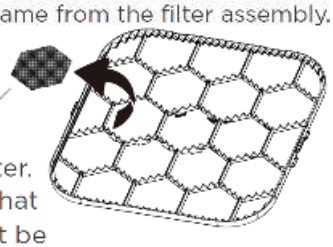

Take out the fresh air filter. (Optional) Please note that the fresh air filter cannot be cleaned with water. It is recommended to replace it regularly.

Clean filter assembly.

Step 2:
Clean the air filter by vacuuming the surface or washing it in warm water with mild detergent.

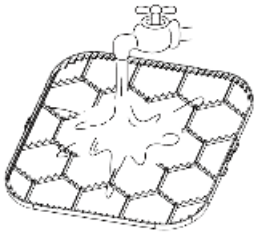

If using water, the inlet side should face down and away from the water stream.

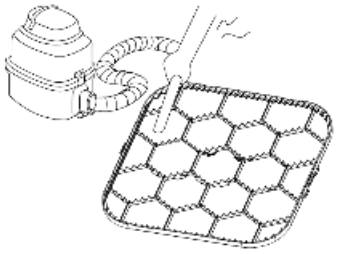

If using a vacuum cleaner, the inlet side should face the vacuum.

Step 3:
Rinse the filter with clean water and allow it to air-dry.
DO NOT let the filter dry in direct sunlight.
Reinstall the filter.

! CAUTION

- Before changing the filter or cleaning, turn off the unit and disconnect its power supply.
- When removing the filter, do not touch metal parts in the unit. The metal edges are sharp.
- Do not use water to clean the inside of the indoor unit. This can destroy insulation and cause electrical shock.
- Do not expose the filter to direct sunlight when drying. This can shrink the filter.
- Any maintenance and cleaning of the outdoor unit should be performed by an authorized dealer or a licensed service provider.
- Any unit repairs should be performed by an authorized dealer or service provider.

Maintaining the Unit

Long Periods of Non-Use

If you plan not to use the unit for an extended period of time, do the following:

Clean all filters.

Turn on fan function until unit dries out completely.

Turn off the unit & disconnect the power.

Remove batteries from remote control.

Pre-Season Inspection

After long periods of non-use, or before periods of frequent use, do the following:

Check for damaged wires.

Clean all filters.

Check for leaks.

Replace batteries.

Ensure nothing is blocking the air inlets & outlets.

9.3 Troubleshooting

CAUTION

If any of the following conditions occur, turn off the unit immediately.

- The wire is damaged or abnormally warm.
- You smell a burning odor.
- The unit emits loud or abnormal sounds.
- A power fuse blows or the circuit breaker frequently trips.
- Water or other objects fall into or out of the unit.

DO NOT ATTEMPT TO FIX THESE YOURSELF! CONTACT AN AUTHORIZED SERVICE PROVIDER IMMEDIATELY.

The following problems are not a malfunction, and in most situations will not require repairs.

Issue	Possible Causes
Unit does not turn on when pressing ON/OFF button.	The unit has a 3-minute protection feature that prevents the unit from overloading. The unit cannot be restarted within 3 minutes of being turned off.
	If the Operation light and PRE-DEF (Pre-heating/defrost) indicators are illuminated, the outdoor temperature is too cold and the unit's anti-cold wind is activated in order to defrost the unit.
The unit changes from COOL/ HEAT mode to FAN mode.	The unit may change its setting to prevent frost from forming on the unit. Once the temperature increases, the unit will start operating in the previously selected mode again. The set temperature has been reached, at which point the unit turns off the compressor. The unit will continue operating when the temperature fluctuates again.
The indoor unit emits white mist.	In humid regions, a large temperature difference between the room's air and the conditioned air can cause white mist.
Both the indoor and outdoor units emit white mist.	When the unit restarts in heat mode after defrosting, white mist may be emitted due to moisture generated from the defrosting process.
The indoor unit makes noises.	A rushing air sound may occur when the louver resets its position. A squeaking sound is heard when the system is off or in cool mode. The noise is also heard when the drain pump is in operation. A squeaking sound may occur after running the unit in heat mode due to expansion and contraction of the unit's plastic parts.
Both the indoor unit and the outdoor unit make noises.	Low hissing sound during operation: this is normal and is caused by refrigerant gas flowing through both indoor and outdoor units.
	Low hissing sound when the system starts, has just stopped running, or is defrosting: This noise is normal and is caused by the refrigerant gas stopping or changing direction.
	Squeaking sound: Normal expansion and contraction of plastic and metal parts caused by temperature changes during operation can cause squeaking noises.
The outdoor unit makes noises.	The unit will make different sounds based on its current operating mode.
Dust is emitted from either the indoor or outdoor unit.	The unit may accumulate dust during extended periods of non-use, which will be emitted when the unit is turned on. This can be mitigated by covering the unit during long periods of inactivity.
The unit emits a bad odor.	The unit may absorb odors from the environment (such as furniture, cooking, cigarettes, etc.) which will be emitted during operation.
	The unit's filters have become moldy and should be cleaned.
The fan of the outdoor unit does not operate.	During operation, the fan speed is controlled to optimize product operation.

Note: If a problem persists, contact a local dealer or MRCOOL® customer service. Provide them with a detailed description of the unit malfunction as well as your model number.

! CAUTION

Before contacting a repair company, check the following points.

Problem	Possible Causes	Solution
Poor Cooling Performance	**Temperature setting may be higher than ambient room temperature.**	Lower the temperature setting.
	The heat exchanger on the indoor or outdoor unit is dirty.	Clean the affected heat exchanger.
	The air filter is dirty.	Remove the filter and clean it according to instructions.
	The air inlet or outlet of either unit is blocked.	Turn the unit off, remove the obstruction and turn it back on.
	Doors and windows are open.	Make sure that all doors and windows are closed while operating the unit.
	Excessive heat is generated by sunlight.	Close windows and curtains during periods of high heat or bright sunshine.
	Too many sources of heat in the room (people, computers, electronics, etc.)	Reduce the amount of heat sources.
	Low refrigerant due to leak or long-term use.	Check for leaks, re-seal if necessary, and top off refrigerant.
The unit is not working	**Power failure**	Wait for the power to be restored.
	The power is turned off.	Turn on the power.
	The fuse is burned out.	Call a technician to replace the fuse.
	Remote control batteries are dead.	Replace batteries
	The unit's 3-minute protection has been activated.	Wait three minutes after restarting the unit.
	Timer is activated.	Turn timer off.
The unit starts and stops frequently.	**System circuit is blocked**	Determine which circuit is blocked and replace the malfunctioning piece of equipment.
	There's too much or too little refrigerant in the system.	Call a technician to check for leaks and recharge the system with refrigerant.
	Incompressible gas or moisture has entered the system.	Call a technician to evacuate and recharge the system with refrigerant.
	The compressor is broken.	Call a technician to replace the compressor.
	The voltage is too high or too low.	Install a manostat to regulate the voltage.
Poor heating performance	**The outdoor temperature is extremely low.**	Use auxiliary heating device
	Cold air is entering through doors and windows.	Make sure that all doors and windows are closed during use.
	Low refrigerant due to leak or long-term use.	Call technician to check for leaks, re-seal if necessary, and top off refrigerant.
Indicator lamps continue flashing	The unit may stop operation or continue to run safely. If the indicator lamps continue to flash or error codes appear, wait for about 10 minutes. The problem may resolve itself. If not, disconnect the power, then connect it again. Turn the unit on. If the problem persists, disconnect the power and contact MRCOOL®.	
Error code appears and begins with the following letters in the display area: *E(x), P(x), F(x), EH(xx), EL(xx), EC(xx), PH(xx), PL(xx), PC(xx)*		

Note: If the problem persists after performing the checks and diagnostics above, turn off the unit immediately and contact MRCOOL®.

9.4 Error Display (Indoor Unit)

When the indoor unit encounters a recognized error, an error code will be displayed; the error codes are described in the tables below:

Display	Error Information
FC	Forced cooling (Not an error code)
EC07	ODU fan speed out of control
EC51	ODU EEPROM parameter error
EC52	ODU coil temp sensor (T3) error
EC53	ODU ambient temp sensor (T4) error
EC54	COMP. discharge temp sensor (TP) error
EC56	IDU coil outlet temp. sensor (T2B) error (Multi-Zone)
ECC1	Other IDU refrigerant sensor detects leakage (Multi-Zone)
EH00	IDU EEPROM malfunction
EH03	IDU fan speed out of control
EH0a	IDU EEPROM parameter error
EHOE	Water-level alarm malfunction
EH12	Main unit or secondary units malfunction
EH3a	External fan DC bus voltage is too low protection
EH3B	External fan DC bus voltage is too high fault
EH60	IDU room temp. sensor (T1) error
EH61	IDU evaporator coil temp. sensor (T2) error
EHBa	Communication error between the indoor unit and the external fan module
EHc1	Refrigerant sensor detects leakage
EHc2	Refrigerant sensor is out of range and leakage is detected
EHc3	Refrigerant sensor is out of range
EL01	IDU & ODU communication error
EL0C	System lacks refrigerant
EL11	Communication malfunction between main unit and secondary units
FHCC	Refrigerant sensor error
PC00	ODU IPM module protection
PC01	ODU voltage protection
PC02	Compressor top (or IPM) temp. protection
PC03	Pressure protection (low or high pressure) (for some models)
PC04	Inverter compressor drive error
PCol	Low ambient temperature protection (for some models)
----	IDUs Mode Conflict (Multi-Zone)

For Other Errors: The display board may show a garbled code or a code undefined by the service manual. Ensure that this code is not a temperature reading.

Troubleshooting: Test the unit using the remote control. If the unit does not respond to the remote, the indoor PCB requires replacement. If the unit responds, the display board requires replacement.

LED Flash Frequency:

9.5 Error Display (Outdoor Unit with Auxiliary Board)

Display	Error Information
DF	Defrost
FC	Forced cooling
EC 51	ODU EEPROM Parameter Error
EL 01	IDU & ODU Communication Error
PC 40	Communication Error between Outdoor Main Chip & Compressor-Driven Chip
PC 08	ODU Overcurrent Protection
PC 10	ODU Low AC Voltage Protection
PC 11	ODU Main Control Board DC Bus High Voltage Protection
PC 12	ODU Main Control Board DC Bus Low Voltage Protection/341 MCE Error
PC 00	IPM module protection
PC 0F	PFC Module Protection
EC 71	Over Current Failure of ODU DC Fan Motor
EC 72	Lack Phase Failure of ODU DC Fan Motor
EC 07	ODU Fan Speed Out of Control
PC 43	ODU Compressor Lack Phase Protection
PC 44	ODU Zero Speed Protection
PC 45	ODU IR Chip Drive Failure
PC 46	Compressor Speed Out of Control
PC 49	Compressor Overcurrent Failure
PC 30	System High Pressure Protection
PC 31	System Low Pressure Protection
PC 0a	High Temperature Protection of Condenser
PC 06	Discharge Temperature Protection of Compressor
LC 06	High Temperature Protection of Inverter Module (IPM)
PC 02	Compressor Top (or IPM) Temperature Protection
EC 52	ODU Coil Temperature Sensor (T3) Error
EC 53	ODU Ambient Temperature Sensor (T4) Error
EC 54	Comp. Discharge Temperature Sensor (TP) Error
EC 50	ODU Temp. Sensor error (T3, T4, TP)
PC 0l	Low Ambient Temperature Protection
EC 55	ODU IPM module temperature sensor malfunction
EC 56	IDU coil outlet temp. sensor (T2B) error
EC 57	Refrigerant pipe temperature sensor error
EC 5a	Failure of enthalpy inlet temperature sensor
EC 5B	Failure of enthalpy outlet temperature sensor
EC SE	Condenser temperature sensor (T3B) failure
EC SC	Pressure sensor failure
EH C1	Refrigerant sensor detects leakage
PC 13	The AC power is cut off or the AC voltage detection circuit fails
PC AI	Condensation protection of refrigerant pipe

9.6 Quick Maintenance by Error Code

If you do not have the time to test which specific parts are faulty, you can change the required parts according to the error code. You can find the parts to replace by error code in the following table.

Part Requiring Replacement	Error Code									
	EH00/ EH0A	EL01	EH03	EH60	EH61	EL0C	EHC1/ EHC2	EHoE	EC53	EH0B
Indoor PCB	√	√	√	√	√	√	X	√	√	X
Outdoor PCB	X	√	X	X	X	X	X	X	√	X
Indoor fan motor	X	X	√	X	X	X	X	X	X	X
T1 Sensor	X	X	X	√	X	X	X	X	X	X
T2 Sensor	X	X	X	X	√	√	X	√	X	X
T3 Sensor	X	X	X	X	X	X	X	X	X	X
T4 Sensor	X	X	X	X	X	X	X	X	√	X
Reactor	X	√	X	X	X	X	X	X	X	X
Compressor	X	X	X	X	X	X	X	X	X	X
Additional Refrigerant	X	X	X	X	X	√	√	√	X	X
Water-Level Switch	X	X	X	X	X	X	X	√	X	X
Water Pump	X	X	X	X	X	X	X	√	X	X
Display Board	X	X	X	X	X	X	X	X	X	√

Part Requiring Replacement	Error Code									
	EC54	EC51	EC52	EC56	EC07	PC00	PC01	PC02	PC04	FHCC/ EHC3
Indoor PCB	X	X	X	X	X	X	X	X	X	√
Outdoor PCB	√	√	√	√	√	√	√	√	√	X
Outdoor Fan Motor	X	X	X	X	√	√	X	√	√	X
T3 Sensor	X	X	√	X	X	X	X	X	X	X
TP Sensor	√	X	X	X	X	X	X	X	X	X
T2B Sensor	X	X	X	√	X	X	X	X	X	X
Refrigerant Sensor	X	X	X	X	X	X	X	X	X	√
Reactor Sensor	X	X	X	X	X	X	√	X	X	X
Compressor	X	X	X	X	X	√	X	X	√	X
IPM Module Board	X	X	X	X	X	√	√	√	√	X
Pressure Protector	X	X	X	X	X	X	X	X	√	X
Additional Refrigerant	X	X	X	X	X	X	X	X	√	X

This marking indicates that this product should not be disposed with other household wastes throughout North America. To prevent possible harm to the environment or human health from uncontrolled waste disposal, recycle it responsibly to promote the sustainable reuse of material resources. To return your used device, please use the return and collection systems or contact the retailer where the product was purchased. They can take this product for environmental safe recycling.

MRCOOL® Olympus Series Ceiling Cassette

The design and specifications of this product and/or manual are subject to change without prior notice.
Consult with the sales agency or manufacturer for details.