This product utilizes **R-454B** *refrigerant*

Olympus Series Mid-Static Ducted Air Handler

INSTALLATION & OWNER'S MANUAL

MODELS:

DUCT-*HP-230B-O

Read this manual carefully before installation and keep it where the operator can easily find it for future reference.

Due to updates and constantly improving performance, the information and instructions within this manual are subject to change without notice.

Version Date: May 29, 2025
Please visit www.mrcool.com/documentation to ensure you have the latest version of this manual.

MRCOOL®
COMFORT MADE SIMPLE

CONTENTS

1 SAFETY 2

2 UNIT OVERVIEW 9
- 2.1 Packing List 9
- 2.2 Product Overview 10
- 2.3 Display Panel 11
- 2.4 Other Features 11
- 2.5 Packing & Unpacking the Unit 11

3 INDOOR UNIT INSTALLATION 12
- 3.1 Installation Summary 12
- 3.2 Installation Location 13
- 3.3 Dimension & Clearance Requirements 16
- 3.4 Hang Indoor Unit 17
- 3.5 Duct & Accessories Installation 20
- 3.6 Filter Installation 21
- 3.7 Motor & Drain Pump Maintenance 23
- 3.8 Drain Hose Connection 24

4 OUTDOOR UNIT INSTALLATION 27
- 4.1 Installation Location 27
- 4.2 Drain Joint Installation 28
- 4.3 Anchor Outdoor Unit 29
- 4.4 Pipe Length 30
- 4.5 Refrigerant Connection Instructions 31
- 4.6 Wiring Precautions 33
- 4.7 Outdoor Unit Wiring 34
- 4.8 Indoor Unit Wiring 34

5 AIR EVACUATION 36
- 5.1 Preparations & Precautions 36
- 5.2 Evacuation Instructions 37
- 5.3 Adding Refrigerant 37

6 POST-INSTALLATION 38
- 6.1 Test Run 38
- 6.2 Care & Maintenance 39
- 6.3 Troubleshooting 40
- 6.4 Commission 42
- 6.5 Error Display (Indoor Unit) 43
- 6.6 Error Display (Outdoor Unit with Auxiliary Board) 44
- 6.7 Quick Maintenance by Error Code 45

Safety Precautions

Read Before Using

Incorrect usage may cause serious damage or injury.

The symbols below are used throughout this manual to indicate instructions that should be followed closely or actions that should be avoided to prevent death, injury, and/or property damage.

WARNING	Indicates the possibility of personal injury or loss of life.
CAUTION	Indicates the possibility of property damage or serious consequences.

WARNING FOR PRODUCT INSTALLATION

INSTALLATION MUST BE PERFORMED BY AN AUTHORIZED DEALER OR SPECIALIST. DEFECTIVE INSTALLATION CAN CAUSE WATER LEAKAGE, ELECTRICAL SHOCK, OR FIRE.

******ELECTRICAL WORK MUST BE COMPLETED BY A QUALIFIED ELECTRICAL TECHNICIAN******

- ***DO NOT* install the unit in a location that may be exposed to combustible gas leaks. If combustible gas accumulates around the unit, it could cause fire.**
- ***DO NOT* turn on the power until the installation and all work has been completed.**

1. Installation must be performed according to the installation instructions. Improper installation could cause water leakage, electrical shock, or fire.
2. Contact an authorized service technician for repair or maintenance of this unit.
3. This appliance must be installed in accordance with national wiring regulations.
4. Only use the included accessories, parts, and specified parts for installation. Using non-standard parts can cause water leakage, electrical shock, fire, and/or failure of the unit.
5. Install the unit in a firm location that can support the unit's weight. If the location cannot support the unit's weight, or the installation is not done properly, the unit may drop and cause serious injury and damage.
6. Install the drainage piping according to the instructions in this manual. Improper drainage could cause water damage to your home and/or property.
7. When moving or relocating the air conditioner, consult experienced service technicians for disconnection and re-installation of the unit.
8. For detailed information of how to install the indoor and outdoor units to their respective supports, please refer to the indoor unit installation and outdoor unit installation sections of this manual.
9. USB device access, replacement, and maintenance operations must be carried out by professional staff.

WARNING FOR CLEANING & MAINTENANCE

1. **DO NOT** clean the unit with excessive amounts of water.
2. **DO NOT** clean the unit with combustible cleaning agents, as these could cause deformation and/or fire.
3. Turn off the device and disconnect the power before cleaning. Failure to do this could result in electrical shock.

TAKE NOTE OF FUSE SPECIFICATIONS

- The unit's circuit board (PCB) is designed with a fuse to provide over-current protection.
- The specifications of the fuse are printed on the circuit board, examples of such are T5A/250VAC and T10A/250VAC.

Note: Only a blast-proof ceramic fuse can be used.

WARNING FOR PRODUCT USE

- ⊘ ***DO NOT*** **insert fingers, rods, or other objects into the air inlet or outlet. This could cause injury, since the fan may be rotating at high speeds.**
- ⊘ ***DO NOT*** **use flammable sprays such as hair spray, lacquer or paint near the unit, as this could cause fire and/or an explosion.**
- ⊘ ***DO NOT*** **operate the unit in places near or around combustible gases. Emitted gas may collect around the unit and cause an explosion.**
- ⊘ ***DO NOT*** **allow children to play with the appliance. Children must be supervised around the unit at all times.**
- ⊘ ***DO NOT*** **operate the unit in a room where it could be exposed to excessive amounts of water, such as a bathroom or laundry room. Exposure to excessive water amounts can cause the electrical components to short circuit.**
- ⊘ ***DO NOT*** **expose your body directly to direct cool airflow from the unit for a prolonged period of time.**

1. If the unit operates abnormally (emits strange noises or a burning smell), immediately turn off the unit and disconnect the power in order to avoid electric shock, fire, and/or injury. Call your local dealer, or MRCOOL® tech support at (270) 366-0457, for further assistance.
2. If the air conditioner is used together with burners or other heating devices, thoroughly ventilate the room in order to avoid an oxygen deficiency.
3. In certain functional environments (such as kitchens and server rooms etc.), the use of specially designed air-conditioning units is highly recommended.
4. This appliance is not intended for use by persons (including children) with reduced physical, sensory or mental capabilities, or lack of experience and knowledge, unless they have been given supervision or instruction concerning use of the appliance by a person responsible for their safety. Children should be supervised to ensure that they do not play with the appliance.
5. Turn off the unit and disconnect the power before performing any cleaning, installation, or repairing. Failure to do so can cause electric shock.

CAUTION

- ⊘ ***DO NOT*** **allow the air conditioner to operate for extended periods of time with the doors or windows open, or in very high humidity.**
- ⊘ ***DO NOT*** **operate the air conditioner with wet hands, as this could cause electric shock.**
- ⊘ ***DO NOT*** **use device for any other purpose than its intended use.**
- ⊘ ***DO NOT*** **climb onto or place objects on top of the outdoor unit.**

1. Make sure that water condensation can drain smoothly and unhindered from the unit.
2. Turn off the unit and disconnect the power if the unit will not be used for an extended period of time.
3. Turn off and unplug the unit during storms.

ELECTRICAL WARNINGS

******ELECTRICAL WORK MUST BE COMPLETED BY A QUALIFIED ELECTRICAL TECHNICIAN******

- ⊘ ***DO NOT*** **share the power supply with other appliances. An improper or insufficient power supply could cause fire and/or electrical shock.**

1. Only use the specified wire. If the wire is damaged, it must be replaced by the manufacturer, its service agent or similarly qualified persons in order to avoid a hazard.
2. The product must be properly grounded during installation or electrical shock could occur.
3. Appropriate wiring standards, regulations, and the installation manual must be followed for all electrical work.
4. If connecting power to fixed wiring, an all-pole disconnection device must be incorporated in the fixed wiring in accordance with the wiring rules and must meet the following requirements: at least 3 mm of clearances in all poles, a leakage current that may exceed 10 mA, and a residual current device (RCD) having a rated residual operating current not exceeding 30 mA.
5. Connect cables tightly and clamp them securely to prevent external forces from damaging the terminal.

ELECTRICAL WARNINGS

Improper electrical connections could overheat, causing fire and/or electrical shock.

6. All electrical connections must be made according to the Electrical Connection Diagram located on the panels of the indoor and outdoor units.
7. All wiring must be properly arranged to ensure that the control board cover can close properly. If the control board cover is not properly closed, it can lead to corrosion and cause the connection points on the terminal to heat up, catch fire, or cause electrical shock.
8. Disconnection must be incorporated in the fixed wiring in accordance with the wiring rules.

FLAMMABLE REFRIGERANT WARNINGS

1. The installation of pipe-work should be kept to a minimum and should be protected from physical damage.
2. Refrigerant pipes should comply with national gas regulations.
3. All mechanical connections and ventilation openings should be kept clear of obstruction.
4. Utilize proper disposal processes based on national regulations.
5. Any person involved with working on or breaking into a refrigerant circuit should hold a current valid certificate from an industry-accredited assessment authority, which authorizes their competence to handle refrigerants safely in accordance with an industry recognized assessment specification.
6. Maintenance and repair requiring the assistance of other skilled personnel shall be carried out under the supervision of the person competent in the use of flammable refrigerants.
7. Do not use any means to accelerate the defrosting process or to clean, other than those recommended by the manufacturer.
8. The appliance shall be stored in a room without continuously operating ignition sources (for example: open flames, an operating gas appliance, or an operating electric heater).
9. Do not allow foreign matter (oil, water, etc.) to enter the piping, and securely seal the opening by pinching, taping, etc.
10. Do not pierce or burn.
11. Refrigerants may not contain an odor.
12. Working procedures that affect safety should only be carried out by competent persons.
13. The unit should be stored in a well-ventilated area where the room size corresponds to the room area as specific for operation, and should be stored so as to prevent potential mechanical damage from occurring.
14. Joints should be tested with detection equipment with a capability of 5 g/year of refrigerant or better, with the equipment in standstill and under operation or under a pressure of at least these standstill or operation conditions after installation. Detachable joints should NOT be used in the indoor side of the unit (brazed, welded joint could be used).
15. A leak detection system is installed. The unit must be powered except for service. For units with a refrigerant sensor, the indoor unit will display an error code and emit a buzzing sound, the compressor of the outdoor unit will immediately stop, and the indoor fan will start running. The service life of the refrigerant sensor is 15 years. When the refrigerant sensor malfunctions, the indoor unit will display the error code "FHCC". The refrigerant sensor cannot be repaired and can only be replaced by the manufacturer. It should only be replaced with the sensor specified by the manufacturer.
16. When a flammable refrigerant is used, the requirements for installation space of the appliance and/or ventilation requirements are determined according to:
    - The mass charge amount (M) used in the unit.
    - The installation location.
    - The type of ventilation of the location of the unit.
    - Piping material, pipe routing, and installation must include protection from physical damage in operation and service. This must be in compliance with local codes and standards, such as ASHRAE 15, IAPMO Uniform Mechanical Code, ICC International Mechanical Code, or CSA B52. All field joints must be accessible for inspection prior to being covered or enclosed.
    - Protection devices, piping and fittings must be protected as much as possible against adverse environmental effects. For example, against the danger of water collecting and freezing in relief pipes or against accumulation of dirt or debris.

FLAMMABLE REFRIGERANT WARNINGS

- Piping in refrigeration systems must be designed and installed to minimize the likelihood of hydraulic shock, resulting in damage from the system.
- Steel pipes and components must be protected against corrosion with a rust-proof coating before applying insulation.
- Precautions must be taken against excessive vibration or movement of the unit.
- The minimum floor area of the room must be mentioned in the form of a table or a single figure without reference to a formula.

17. After completion of field piping for split systems, the field pipework should be pressure tested with an inert gas and then vacuum tested prior to refrigerant charging, according to the following requirements:
    - The minimum test pressure for the low side of the system should be the low side design pressure and the minimum test pressure for the high side of the system should be the high side design pressure, unless the high side of the system cannot be isolated from the low side of the system in which case the entire system should not be pressure tested to the low side design pressure.
    - The test pressure after removal of pressure source shall be maintained for at least 1 hour with no decrease of pressure indicated by the test gauge, with test gauge resolution not exceeding 5% of the test pressure.
18. Prior to beginning work on systems containing flammable refrigerants, safety checks are necessary to ensure that the risk of ignition is minimized. For repairs to the refrigerating system, the following precautions shall be complied with prior to conducting work on the system.
19. Work should be undertaken under a controlled procedure so as to minimize the risk of a flammable gas or vapor being present while the work is being performed.
20. All maintenance staff and others working in the local area should be instructed on the nature of work being carried out. Avoid work in confined spaces.
21. The area should be checked with an appropriate refrigerant detector prior to and during work, to ensure the technician is aware of potentially flammable atmospheres. Ensure that the leak detection equipment being used is suitable for use with flammable refrigerants, i.e. no sparking, adequately sealed, or intrinsically safe.
22. If any hot work is to be conducted on the refrigeration equipment or any associated parts, appropriate fire extinguishing equipment should be on site and readily available. Have a dry power or CO2 fire extinguisher adjacent to the charging area.
23. No person carrying out work in relation to a refrigerating system which involves exposing any pipe work should use any sources of ignition in such a manner that it may lead to the risk of fire or explosion. All possible ignition sources, including cigarette smoking, should be kept sufficiently far away from the site of installation, repairing, removing, and disposal, during which refrigerant can possibly be released to the surrounding space. Prior to work taking place, the area around the equipment is to be surveyed to make sure that there are no flammable hazards or ignition risks. "No Smoking" signs should be displayed.
24. Ensure that the area is in the open or that it is adequately ventilated before breaking into the system or conducting any hot work. A degree of ventilation shall continue during the period that the work is carried out. The ventilation should safely disperse any released refrigerant and preferably expel it externally into the atmosphere.
25. Where electrical components are being changed, they shall be fit for the purpose and to the correct specification. At all times the manufacturer's maintenance and service guidelines shall be followed. If in doubt, consult the manufacturer's technical department for assistance. The following checks should be applied to installations using flammable refrigerants:
    - the actual refrigerant charge is in accordance with the room size within which the refrigerant containing parts are installed;
    - the ventilation machinery and outlets are operating adequately and are not obstructed;
    - if an indirect refrigerating circuit is being used, the secondary circuits should be checked for the presence of refrigerant;
    - marking to the equipment continues to be visible and legible, marking and signs that are illegible should be corrected;
    - refrigerant pipe or components are installed in a position where they are unlikely to be exposed to any substance which may corrode refrigerant containing components, unless the components are constructed of materials which are inherently resistant to or protected against corrosion.

FLAMMABLE REFRIGERANT WARNINGS

26. Repair and maintenance to electrical components shall include initial safety checks and component inspection procedures. If a fault exists that could compromise safety, then no electrical supply shall be connected to the circuit until it is satisfactorily dealt with. If the fault cannot be corrected immediately but it is necessary to continue operation, an adequate temporary solution should be used.
27. Initial safety checks should include:
    - that capacitors are discharged: this should be done in a safe manner to avoid the possibility of sparking;
    - that there are no live electrical components and wiring are exposed while charging, recovering, or purging the system;
    - that there is continuity of earth bonding.
28. Sealed electrical components should be replaced if damaged.
29. Intrinsically safe components should be replaced if damaged.
30. Check that wiring will not be subject to wear, corrosion, excessive pressure, vibration, sharp edges, or any other adverse environmental effects. The check shall also take into account the effects of aging or continual vibration from sources such as compressors or fans.
31. Under no circumstances should potential sources of ignition be used in the search for or detection of refrigerant leaks. A halide torch (or any other detector using a naked flame) should not be used. The following leak detection methods are deemed acceptable for refrigerant systems. Electronic leak detectors may be used to detect refrigerant leaks but, in the case of flammable refrigerants, the sensitivity may not be adequate, or may need re-calibration. (Detection equipment shall be calibrated in a refrigerant-free area.) Ensure that the detector is not a potential source of ignition and is suitable for the refrigerant used. Leak detection equipment shall be set at a percentage of the LFL of the refrigerant and should be calibrated to the refrigerant employed, and the appropriate percentage of gas (25% minimum) is confirmed. Leak detection fluids are also suitable for use with most refrigerants but the use of detergents containing chlorine may react with the refrigerant and corrode the copper work. Examples of leak detection fluids are the bubble method, fluorescent method agents, etc. If a leak is suspected, all naked flames should be removed/extinguished. If a leakage of refrigerant is found which requires brazing, all of the refrigerant should be recovered from the system, or isolated (by means of shut-off valves) in a part of the system remote from the leak. See the following instructions of removal of refrigerant.
32. When breaking into the refrigerant circuit to make repairs, or for any other purpose, conventional procedures should be used. However, for flammable refrigerants, it is even more vital to follow best practice. The following procedure should be adhered to:
    - safely remove refrigerant following local and national regulations;
    - evacuate;
    - purge the circuit with inert gas;
    - evacuate;
    - continuously flush or purge with inert gas when using flame to open circuit;
    - open the circuit
33. The refrigerant charge should be recovered into the correct recovery cylinders if venting is not allowed by local and national codes. For units containing flammable refrigerants, the system should be purged with oxygen-free nitrogen to render the appliance safe for flammable refrigerants. This process might need to be repeated several times. Compressed air or oxygen shall not be used for purging refrigerant systems. For appliances containing flammable refrigerants, refrigerant purging should be achieved by breaking the vacuum in the system with oxygen-free nitrogen and continuing to fill the working pressure is achieved, then venting to atmosphere, and finally pulling down to a vacuum. This process should be repeated until no refrigerant is within the system. When the final oxygen-free nitrogen charge is used, the system should be vented down to atmospheric pressure to enable work to take place. The outlet for the vacuum pump should not be close to any potential ignition sources, and ventilation should be available.
34. In addition to conventional charging procedures, the following requirements should be followed:
    - Work should be undertaken with appropriate tools only (in case of uncertainty, please consult the manufacturer of the tools for use with flammable refrigerants)
    - Ensure that contamination of different refrigerants does not occur when using charging equipment. Hoses or lines shall be as short as possible to minimize the amount of refrigerant contained in them.

FLAMMABLE REFRIGERANT WARNINGS

- Ensure that the refrigeration system is grounded prior to charging the system with refrigerant.
- Label the system when charging is complete (if not already).
- Extreme care should be taken not to overfill the refrigeration system.
- Prior to recharging the system, it should be pressure tested with oxygen-free nitrogen (OFN). The system should be leak-tested on completion of charging but prior to commissioning. A follow-up leak test shall be carried out prior to leaving the site.

35. Before carrying out this procedure, it is essential that the technician is completely familiar with the equipment and all its detail. It is good recommended practice that all refrigerants are recovered safely. Prior to the task being carried out, an oil and refrigerant sample should be taken in case analysis is required prior to re-use of recovered refrigerant. It is essential that electrical power is available before the task is commenced.
    a. Become familiar with the equipment and its operation.
    b. Isolate the system electrically.
    c. Before attempting the procedure ensure that:
        - mechanical handling equipment is available, if required, for handling refrigerant cylinders;
        - all personal protective equipment is available and being used correctly;
        - the recovery process is supervised at all times by a competent person;
        - recovery equipment and cylinders conform to the appropriate standards
    d. Pump down refrigerant system, if possible.
    e. If a vacuum is not possible, make a manifold so that refrigerant can be removed from various parts of the system.
    f. Make sure that the cylinder is situated on the scales before recovery takes place.
    g. Start the recovery machine and operate in accordance with instructions.
    h. Do not overfill cylinders (no more than 80% volume liquid charge).
    i. Do not exceed the maximum working pressure of the cylinder, even temporarily.
    j. When the cylinders have been filled correctly and the process completed, make sure that the cylinders and equipment are removed from the site promptly and all isolation valves on the equipment are closed off.
    k. Recovered refrigerant should not be charged into another refrigeration system unless it has been cleaned and checked.
36. Equipment shall be labeled stating that it has been decommissioned and emptied of refrigerant. The label should be dated and signed. For appliances containing flammable refrigerants, ensure that there are labels on the equipment stating the equipment contains flammable refrigerant.
37. When removing refrigerant from a system, either for servicing or decommissioning, it is good recommended practice that all refrigerants are removed safely. When transferring refrigerant into cylinders, ensure that only appropriate refrigerant recovery cylinders are employed. Ensure that the correct number of cylinders for holding the total system charge is available. All cylinders to be used should be designated for the recovered refrigerant and labeled for that refrigerant (i.e. special cylinders for the recovery of refrigerant). Cylinders shall be complete with pressure-relief valve and associated shut-off valves in good working order. Empty recovery cylinders are evacuated and, if possible, cooled before recovery occurs. The recovery equipment should be in good working order with a set of instructions concerning the equipment that is at hand and should be suitable for the recovery of the flammable refrigerant. If in doubt, the manufacturer should be consulted. In addition, a set of calibrated weighing scales should be available and in good working order. Hoses should be complete with leak-free disconnect couplings and in good condition. The recovered refrigerant should be processed according to local legislation in the correct recovery cylinder, and the relevant waste transfer note arranged. Do not mix refrigerants in recovery units and especially not in cylinders.
38. If compressors or compressor oils are to be removed, ensure that they have been evacuated to an acceptable level to make certain that flammable refrigerant does not remain within the lubricant. The compressor body should not be heated by an open flame or other ignition sources to accelerate this process. When oil is drained from a system, it should be carried out safely.
39. An unventilated area where the appliance using flammable refrigerants is installed should be constructed so that should any refrigerant leak, it will not stagnate so as to create a fire or explosion hazard. If appliances connected via an air duct system to one or more rooms below the ventilation requirements,

FLAMMABLE REFRIGERANT WARNINGS

that room should never contain potential ignition sources. A flame-producing device may be installed in the space if the device is provided with an effective flame arrest. Auxiliary devices which may be a potential ignition source should not be installed in the duct work. Examples of such are hot surfaces with a temperature exceeding 1292°F (700°C) and electric switching devices. Only auxiliary devices (such as a certified heater kit) approved by the manufacturer or declared suitable with the refrigerant should be installed in connecting ductwork. False or drop ceilings may be used as a return air plenum if a refrigerant detection system is provided in the appliance and any external connections are also provided with a sensor immediately below the return air plenum duct joint. Refrigerant sensors for refrigerant detection systems should only be replaced with sensors specified by the manufacturer. A leak detection system is installed. The unit must be powered except for service.

40. Transport of equipment containing flammable refrigerants should comply with transportation regulations.
41. Marking of equipment using signs should comply with local regulations.
42. Disposal of equipment using flammable refrigerants should comply with national regulations.
43. Storage of equipment/appliances should be in accordance with the manufacturer's instructions.
44. Storage of packed (unsold) equipment should be constructed so that mechanical damage to the equipment inside the package will not cause a leak of the refrigerant charge. The maximum number of pieces of equipment permitted to be stored together will be determined by local regulations.
45. During the evacuation test, after achieving a vacuum level specified in the manual or less, the refrigeration system shall be isolated from the vacuum pump and the pressure shall not rise above 1500 microns within 10 minutes. The vacuum pressure level should be specified in the manual, and should be the lessor of 500 microns of the value required for compliance with national and local codes and standards, which may vary between residential, commercial, and industrial buildings.
    - Field-made refrigerant joints indoors should be tightness-tested according to the following requirements: the test method should have a sensitivity of 5 grams per year of refrigerant or better under a pressure of at least 0.25 times the maximum allowable pressure. No leak should be detected.
    - Any servicing should be performed only as recommended by MRCOOL®.
46. Any maintenance, service, or repair operations must be performed by qualified personnel. Every working procedure that affects safety should only be carried out by competent persons that are both trained and certified. The training of these procedures should be carried out by national training organizations or manufacturers that are accredited to teach the relevant national competency standards that may be set in legislation. All training should follow the ANNEX HH requirements of UL 60334-2-40 4th Edition.

    Examples of such working procedures are:
    - breaking into a refrigerant circuit
    - opening of sealed components
    - opening of ventilated enclosures

Symbols Displayed on Indoor & Outdoor Unit		
A2L	**WARNING**	This symbol shows that this appliance uses a flammable refrigerant. If the refrigerant is leaked and exposed to an external ignition source, there is a risk of fire.
	CAUTION	This symbol shows that the operation manual should be read carefully.
	CAUTION	This symbol shows that a service personnel should be handling this equipment with reference to the installation manual.
	CAUTION	
	CAUTION	This symbol shows that information is available such as the operating manual or installation manual.

2.1 Packing List

This system comes with the following accessories. Use all of the installation parts and accessories to install the unit. Improper installation may result in water leakage, electrical shock and fire, or cause the equipment to fail. The items that are not included with the air conditioner must be purchased separately.

PART	LOOKS LIKE	QUANTITY
Manual		**2 (Installation & Remote)**
Remote Control		**1**
Batteries	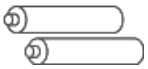	**2**
Remote Control Holder		**1**
Wired Thermostat		**1**
Display Panel		**1**
Soundproof / Insulation Sheath		**2**
Outlet Pipe Sheath		**1**
Seal Ring		**1**
Drain Joint		**1**
Outlet Pipe Clasp		**2**
Copper Nut		**2**
Magnetic Ring (S1 & S2 - P/Q/E)		**1**
Magnetic Ring (Connective Cable)		**1**

Name	Model	Pipe Specification		Remark
		Liquid Side	Gas Side	
Connecting Pipe Assembly	9K	Ø1/4in (Ø6.35mm)	Ø3/8in (Ø9.52mm)	Pipes are not included in the accessories and must be purchased separately from a local dealer.
	12K	Ø1/4in (Ø6.35mm)	Ø3/8in (Ø9.52mm)	
	18K	Ø1/4in (Ø6.35mm)	Ø1/2in (Ø12.7mm)	
	24K	Ø3/8in (Ø9.52mm)	Ø5/8in (Ø16mm)	

2.2 Product Overview

NOTE: Illustrations in this manual are for explanatory purposes. The actual shape of your indoor unit may be slightly different. The actual shape shall prevail. The installation must be performed in accordance with the requirement of local and national standards. The installation may be slightly different in different areas.

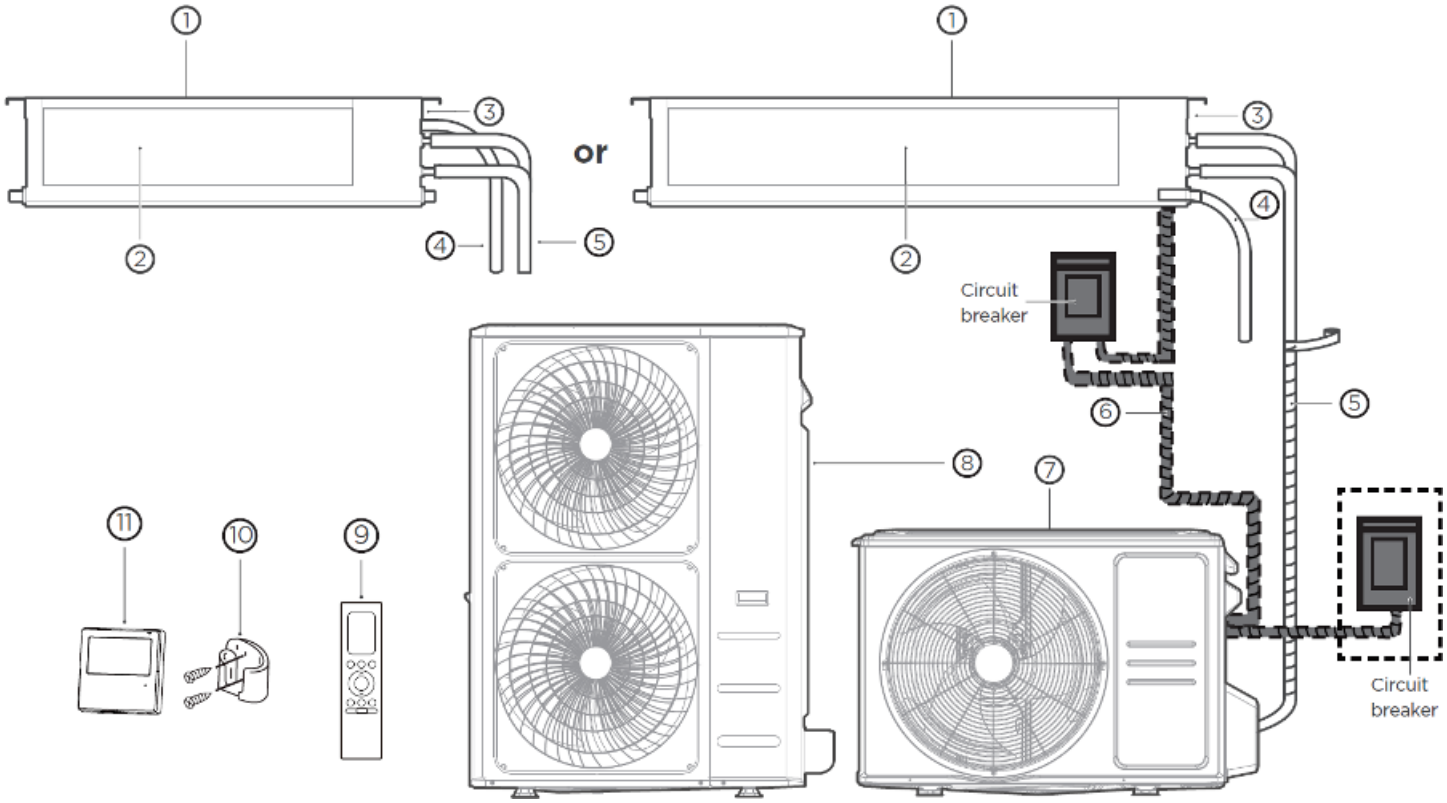

1. Air Inlet
2. Air Outlet
3. Electric Control Box
4. Drain Pipe (purchase separately)
5. Refrigerant Piping (purchase separately)
6. Connection Cable (purchase separately)
7. Outdoor Unit (3, 4, & 5-Zone)
8. Outdoor Unit (6-Zone)
9. Remote Control
10. Remote Control Holder
11. Wired Thermostat

Tools NOT Included:

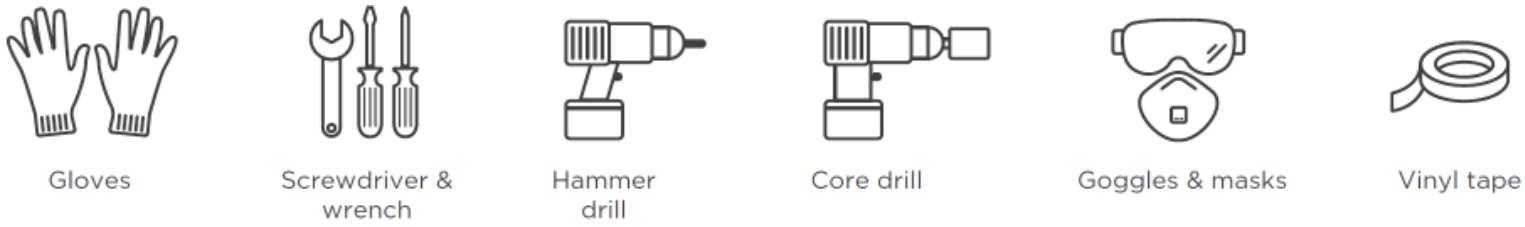

2.3 Display Panel

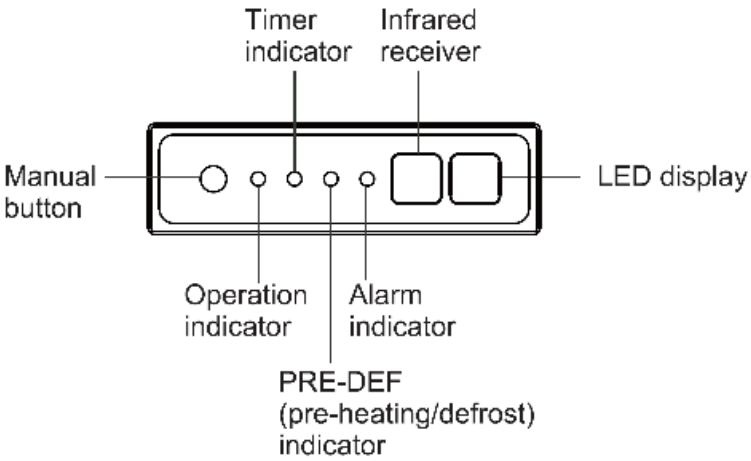

- Manual Button: This button selects the mode in the following order- Auto, Forced, Cool, Off.
- Forced Cool Mode: In this mode, the Operation light flashes. The system will then turn to Auto after it has cooled with a high wind speed for 30 minutes. The remote control will be disabled during this operation.
- Off Mode: When the display panel is turned off, the unit turns off and the remote control is re-enabled.

2.4 Other Features

Heat Exchanger Dust Removal Function:

This feature helps keep the outdoor coil cleaner and may extend the duration between regular maintenance intervals depending on local conditions. When the unit is turned off, a 10-second delay occurs then the outdoor fan runs in reverse rotation for 70 seconds to blow off loose accumulated dust and debris.

Refrigerant Leakage Detection

When the system detects a malfunction of the refrigerant, the indoor unit will automatically display the following error codes:

- ELOC - System lacks refrigerant
- EHC1 - Refrigerant sensor detects leakage
- ECH2 - Working condition of the refrigerant sensor is out of range and leakage is detected
- EHC3 - Working condition of the refrigerant sensor is out of range
- ECC1 - Other indoor unit refrigerant sensor detects leakage (multi-zone)

When EHC1 or EHC2 error occurs, the buzzer will continue to beep for 5 to 6 minutes before stopping. You can also press any button on the remote control to stop the buzzer.

2.5 Packing & Unpacking the Unit

Unpacking:

Indoor Unit:

1. Cut the packing belt.
2. Open the package.
3. Take out the packing cushion and packing support.
4. Remove the packing film.
5. Take out the accessories.
6. Lift the machine out and lay it flat.

Outdoor Unit:

1. Cut the packing belt.
2. Take the unit out of the package.
3. Remove the foam from the unit.
4. Remove the packing film from the unit.

Packing:

Indoor Unit:

1. Put the indoor unit into the packing film.
2. Put the accessories in.
3. Place the packing cushion and packing support.
4. Put the indoor unit into the package.
5. Close the package and seal it.
6. Using the packing belt if necessary.

Outdoor Unit:

1. Put the outdoor unit into the packing film.
2. Put the bottom foam into the box.
3. Put the outdoor unit into the package, then put the upper packaging foam on the unit.
4. Close the package and seal it.
5. Using the packing belt if necessary.

NOTE:
Please keep all packaging items in the case they are needed in the future.

3.1 Installation Summary

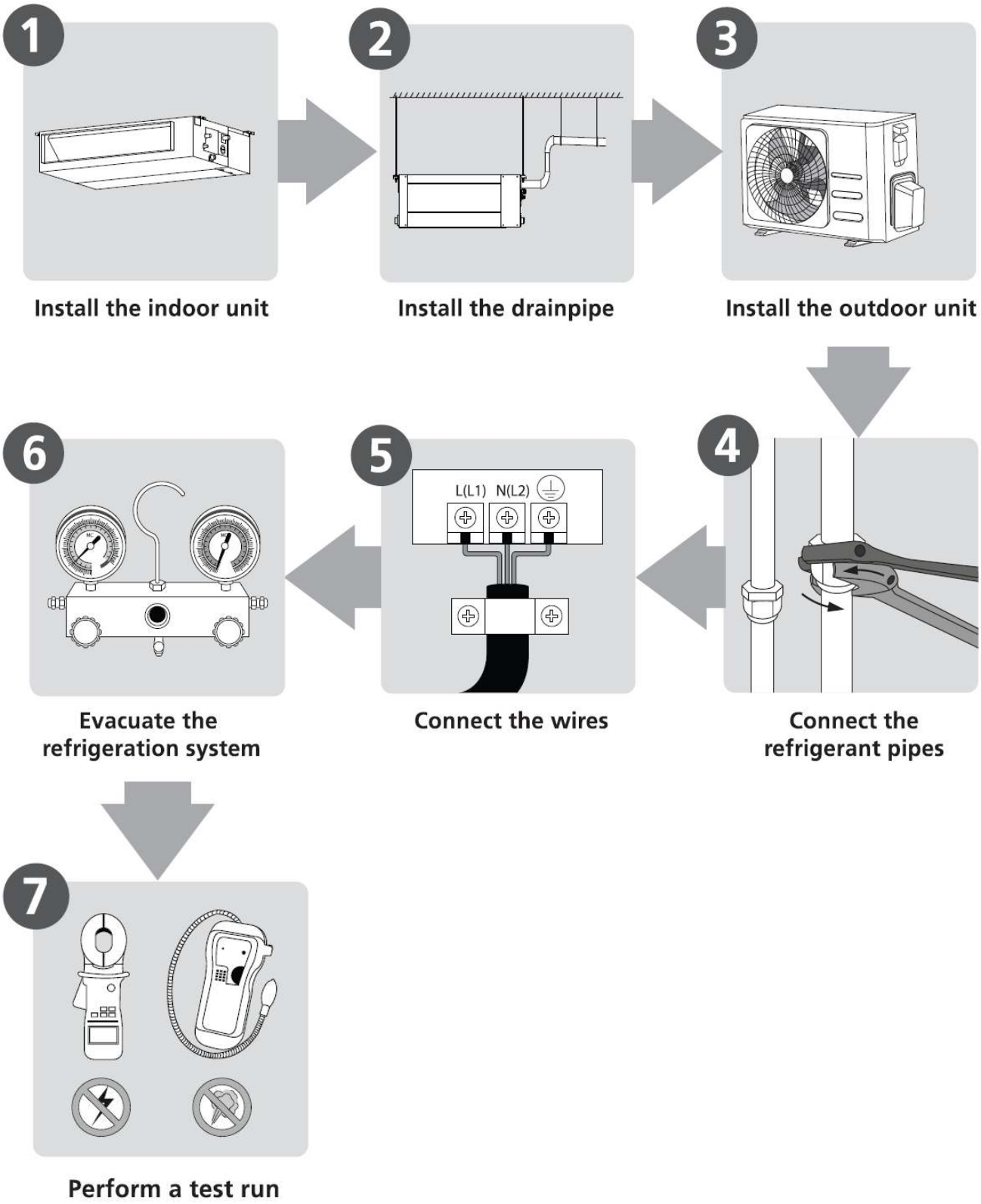

3.2 Installation Location

Note: Before you begin installation, refer to the label on the product box to make sure that the model number of the indoor unit matches the model number of the outdoor unit.

The following standards will help you choose an appropriate location for the unit. Proper installation must meet the following specifications:

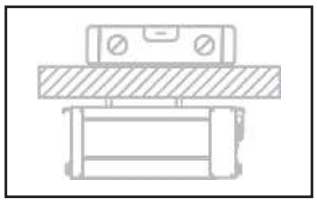

☑ *The ceiling is horizontal & it can sustain the weight of the indoor unit.*

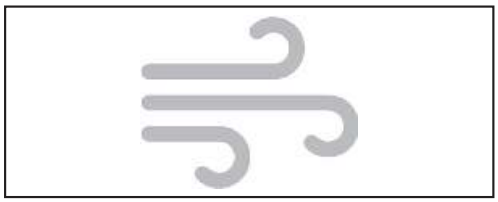

☑ *The air inlet and outlet are not blocked.*

☑ *The airflow can fill the entire room*

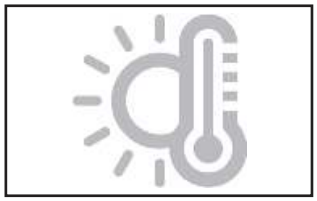

☑ *There is no direct radiation from heaters.*

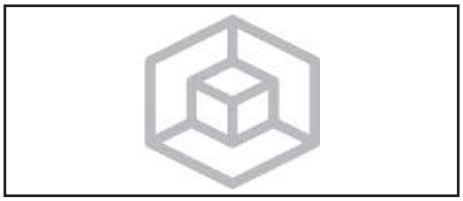

☑ *Enough room exists for installation, maintenance, & connecting the pipe & drainpipe.*

Do NOT install the unit in the following locations:

- ⊘ Areas with oil drilling or fracking.
- ⊘ Coastal areas with high salt content in the air.
- ⊘ Areas with caustic gases in the air, such as hot springs.
- ⊘ Areas that experience power fluctuations, such as factories.
- ⊘ Enclosed spaces, such as cabinets
- ⊘ Kitchens that use natural gas
- ⊘ Areas with strong electromagnetic waves
- ⊘ Areas that store flammable materials or gas.
- ⊘ Rooms with high humidity, such as bathrooms or laundry rooms.

NOTE: Models with a cooling capacity of 9K to 18K only apply to one room.

454B Refrigerant Charge Amount & Minimum Room Area

The unit matches the following table. The indoor and outdoor units are designed to be used together. Refer to the unit you purchased. The minimum room area of operating or storage should be as specified in the following table:

Model	Indoor Unit	Outdoor Unit
9K	DUCT-09HP-230B-O	O-ES-09-HP-C-230C-O1
12K	DUCT-12HP-230B-O	O-ES-12-HP-C-230C-O1
18K	DUCT-18HP-230B-O	O-ES-18-HP-C-230C-O1
24K	DUCT-24HP-230B-O	O-ES-24-HP-C-230C-O1

Room Size Restriction

The units are connected via an air duct to one or more rooms, the bottom of the air outlet of the air duct in the room should be at a height ≥7.3 ft (2.2m) from the floor. In UL/CSA 60335-2-40, the R454B refrigerant belongs to mildly flammable refrigerants, which will limit the room area of the system service. Similarly, the total amount of refrigerant in the system should be less than or equal to the maximum allowable refrigerant charge, which depends on the room area serviced by the system.

SECTION TERMINOLOGY

Mc: the actual refrigerant charge in the system
A: the actual room area where the appliance is installed
Amin: the required minimum room area
Mmax: the allowable maximum refrigerant charge in a room
Qmin: the minimum circulation airflow
Anvmin: the minimum opening area for connected rooms
TAmin: the total area of the conditioned space (for appliances serving one or more rooms with an air duct system)
TA: The total area of the conditioned space connected by air ducts.

Refrigerant Charge & Room Area Limitations

For the purpose of determination of room area (A) when used to calculate the maximum allowable refrigerant charge (max) in an unventilated space, the following shall apply.

The room area (A) shall be defined as the room area enclosed by the projection to the floor of the walls, partitions and doors of the space in which the appliance is installed. Spaces connected by only drop ceilings, ductwork, or similar connections shall not be considered a single space.

For units mounted higher than 6 ft (1.8m), spaces divided by partition walls which are no higher than 5.3ft/1.6m shall be considered a single space.

For fixed appliances, rooms on the same floor and connected by an open passageway between the spaces can be considered a single room when determining compliance to Amin, if the passageway complies with all of the following:

- it is a permanent opening
- it extends to the floor
- it is intended for people to walk through

For fixed appliances, the areas of the adjacent rooms, on the same floor, connected by a permanent opening in the walls and/or doors between occupied spaces, including gaps between the wall and the floor, can be considered a single room when determining compliance to Amin, provided all of the following are met:

- the space shall have appropriate openings
- the minimum opening area for natural ventilation Anvmin shall not be less than the following:

Height of Outlet/m	A/m²	Mc/kg	Mmax/kg	Anvmin/ m²
2.2	5	5.0	2.685	0.045
2.2	6	5.0	2.941	0.042
2.2	7	5.0	3.177	0.038
2.2	8	5.0	3.396	0.035
2.2	9	5.0	3.602	0.031
2.2	10	5.0	3.797	0.028
2.2	11	5.0	3.983	0.024
2.2	12	5.0	4.160	0.020
2.2	13	5.0	4.330	0.016
2.2	14	5.0	4.493	0.013
2.2	15	5.0	4.651	0.009
2.2	16	5.0	4.803	0.005
2.2	17	5.0	4.951	0.001

NOTE: Take the Mc=5.0kg as an example. For appliances serving one or more rooms with an air duct system, the room area calculation should be determined based on the total area of the conditioned space (TA) connected by ducts taking into consideration that the circulating airflow distributed to all the rooms by the appliance integral indoor fan will mix and dilute the leaking refrigerant before entering any room.

Opening Conditions for Connected Rooms

When the openings for connected rooms are required, the following conditions should be applied:

- the area of any openings above 11.81in (300mm) from the floor should not be considered in determining compliance with Anvmin.
- at least 50% of the required opening area Anvmin should be below 7.87in (200mm) from the floor.
- the bottom of the lowest openings should not be higher than the point of release when the unit is installed and not more than 3.94in (100mm) from the floor.
- openings are permanent openings which cannot be closed (for openings extending to the floor, the height should not be less than .79in (20mm) above the surface of the floor covering)
- A second higher opening should be provided. The total size of the second opening should not be less than 50% of the minimum opening area for Anvmin and should be at least 4.9ft (1.5m) above the floor. (NOTE: The requirement for the second opening can be met by drop ceilings, ventilation ducts, or similar arrangements that provide an airflow path between the connected rooms.)
- The room into which refrigerant can leak, plus the connected adjacent room(s) should have a total area of no less than TAmin.
- The room in which the unit is installed should not be less than 20% TAmin.

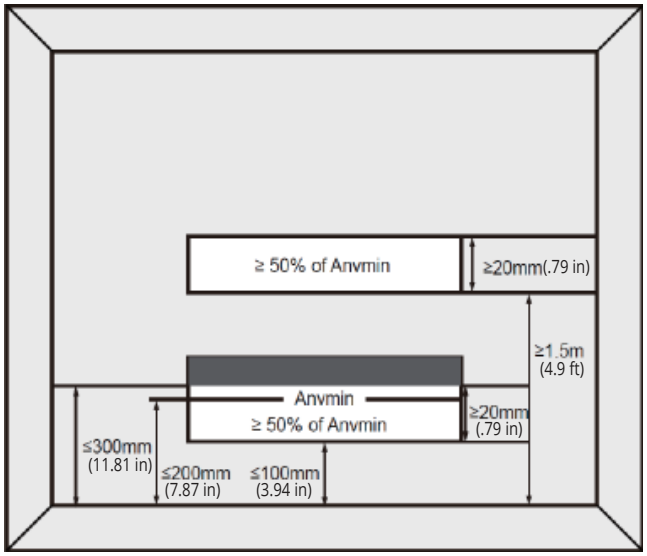

M_C or M_{REL} [oz/kg]	TAmin [ft²/m²]	M_C or M_{REL} [oz/kg]	TAmin [ft²/m²]	M_C or M_{REL} [oz/kg]	TAmin [ft²/m²]	M_C or M_{REL} [oz/kg]	TAmin [ft²/m²]
<=62.7/1.776	12/1.1	134/3.8	126/11.67	211.6/6.0	198/18.43	289.2/8.2	271/25.18
63.5/1.8	60/5.53	141.1/4	132/12.29	218.7/6.2	205/19.04	296.3/8.4	278/25.8
70.5/2	66/6.14	148.1/4.2	139/12.9	225.8/6.4	212/19.66	303.4/8.6	284/26.41
77.6/2.2	73/6.76	155.2/4.4	145/13.51	232.8/6.6	218/20.27	310.4/8.8	291/27.63
84.6/2.4	79/7.37	162.2/4.6	152/14.3	239.9/6.8	225/20.88	317.5/9.0	298/27.64
91.7/2.6	86/7.99	169.3/4.8	159/14.74	246.9/7.0	231/21.5	324.5/9.2	304/28.26
98.8/2.8	93/8.6	176.4/5	165/15.36	254/7.2	238/22.11	331.6/9.4	311/28.87
105.8/3	99/9.21	183.4/5.2	172/15.97	261/7.4	245/22.73	338.6/9.6	317/29.48
112.9/3.2	106/9.83	190.5/5.4	179/16.58	268.1/7.6	251/23.34	345.7/9.8	324/30.10
119.9/3.4	112/10.44	197.5/5.6	185/17.2	275.1/7.8	258/23.96	352.7/10.0	331/30.71
127/3.6	119/11.06	204.6/5.8	192/17.81	282.2/8.0	264/24.57		
Area Formula	**TAmin** is the required minimum room area in ft²/m². **M_C** is the actual refrigerant charge in the system in oz/kg. **M_{REL}** is the height of the bottom of the appliance relative to the floor of the room after installation. **WARNING:** The minimum room area or minimum room area of conditioned space is based on releasable charge and total system refrigerant charge.						

When the unit detects a refrigerant leak, the minimum airflow of the indoor unit is as follows:

Model	9K	12K	18K	24K
Nomimal Air Volume	400CFM (680m³/h)	400CFM (680m³/h)	447CFM (760m³/h)	541CFM (920m³/h)

3.3 Dimensions & Clearance Requirements

Installation Space

The distance between the mounted indoor unit should meet the specifications illustrated in the following diagrams

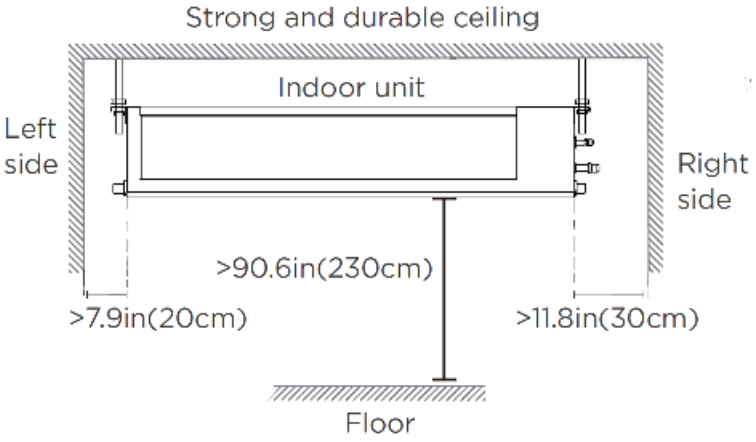

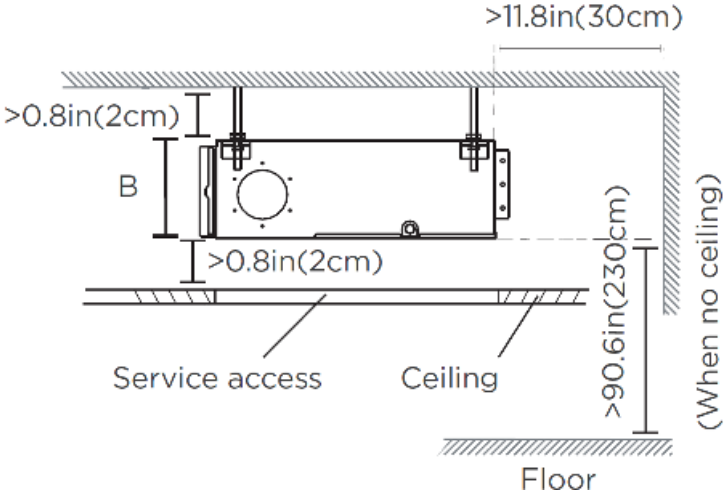

Maintenance Space

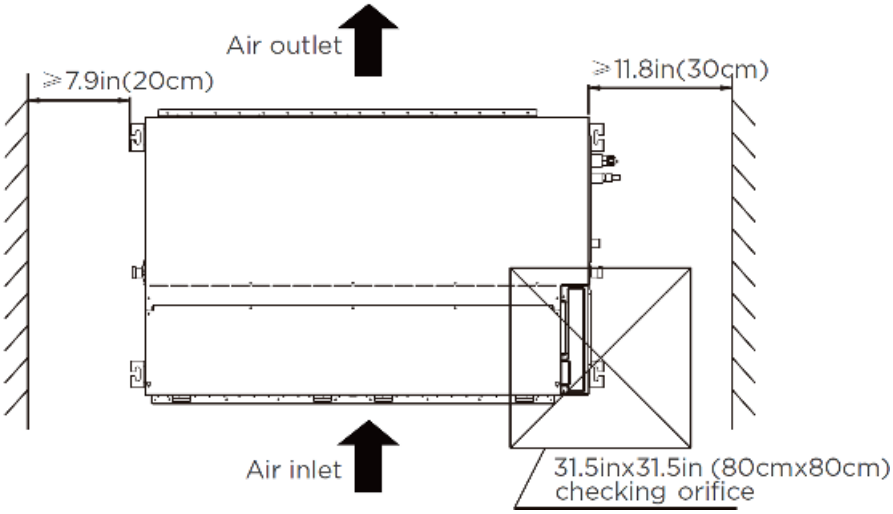

3.4 Hang Indoor Unit

Please refer to the following diagrams to locate the four positioning screw bolt holes on the ceiling. Be sure to mark the places where you will drill ceiling hook holes.

9-18K:

Air Outlet Dimensions

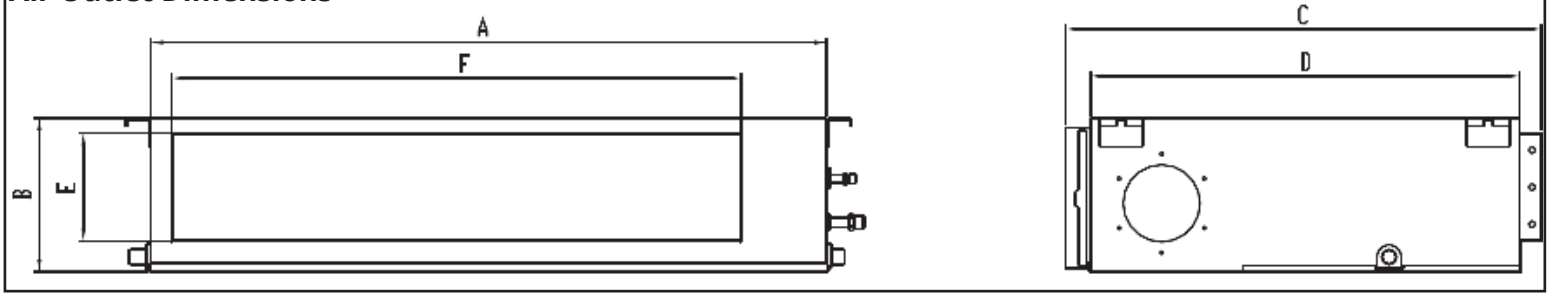

Air Inlet Dimensions

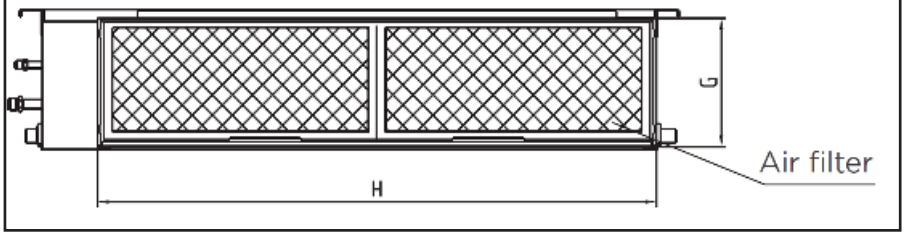

Descending Ventilation Opening & Mounted Hook

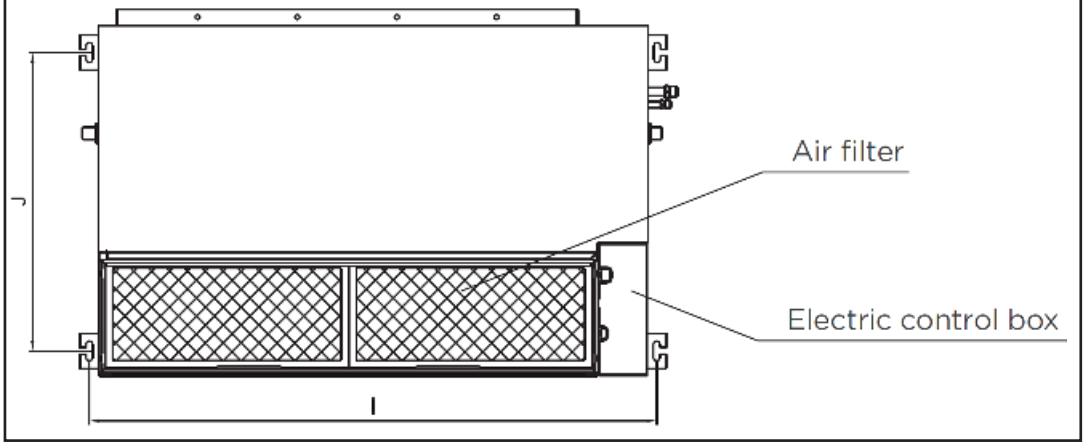

Model	Outline Dimension				Air Outlet Opening Size				Mounted Lug Size	
	A	B	C	D	E	F	G	H	I	J
9K/12K	27.6/700	7.9/200	19.9/506	17.7/450	6.0/152	21.1/537	7.3/186	23.6/599	29.2/741	14.2/360
18K	34.6/880	8.3/210	26.5/674	23.6/600	5.4/136	27.8/706	7.5/190	30.8/782	36.2/920	20.0/508

24K:

Air Outlet Dimensions

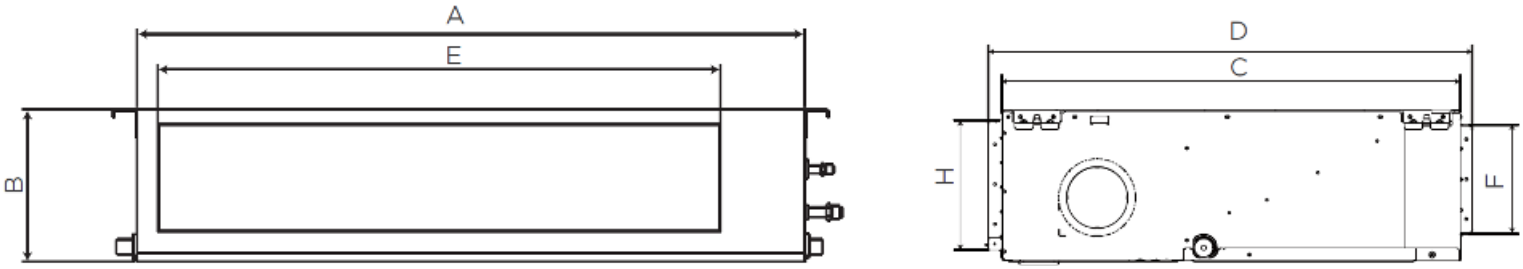

Air Inlet Dimensions

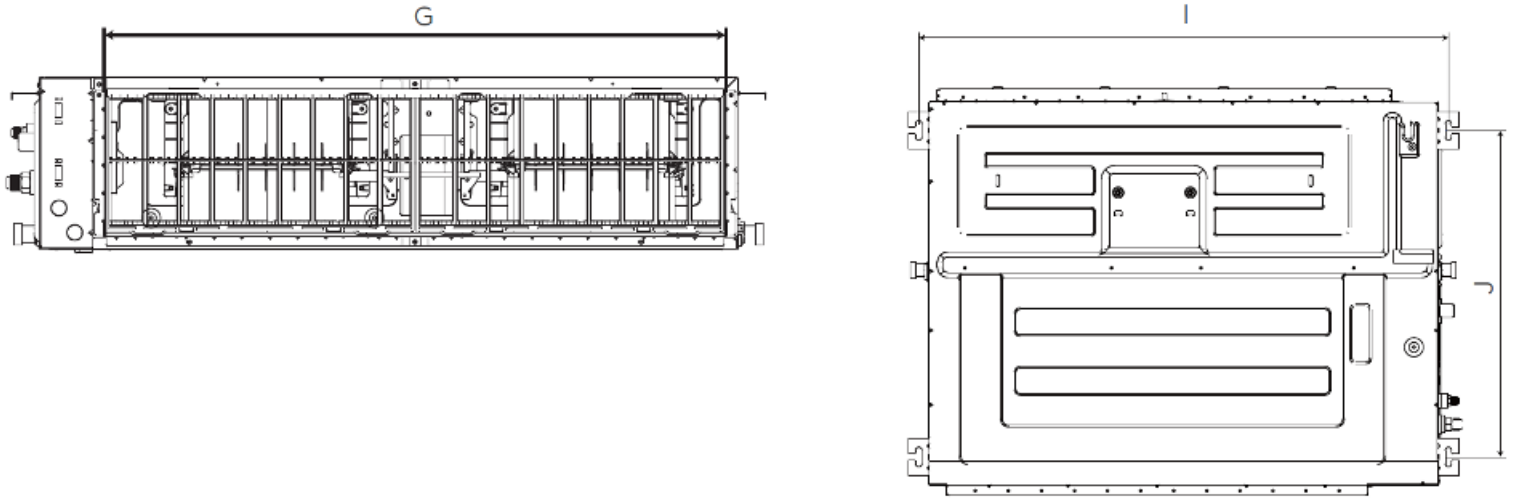

Model	Outline Dimension				Air Outlet Opening Size				Mounted Lug Size	
	A	B	C	D	E	F	G	H	I	J
24K	39.4/1000	9.6/245	29.5/750	31.3/795	32.6/827	7.0/178	35.1/892	8.3/212	40.9/1040	25.2/640

Wood:

The mounting holes for the upper foam are used for auxiliary positioning bolts (if the foam is damaged, the spacing between the actual lifting lugs shall be the standard).

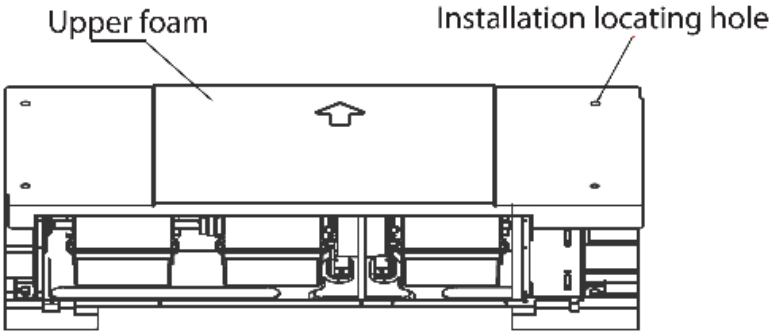

1. Place the wood mounting across the roof beam, then install the hanging screw bolts.

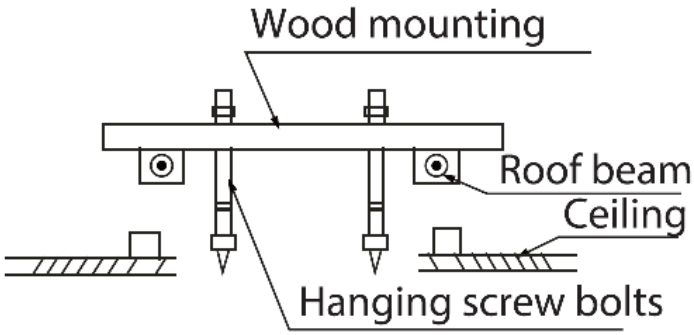

New Concrete Bricks:

Inlay or embed the screw bolts.

(Blade shape insertion)

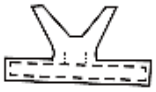

(Slide insertion)

Original Concrete Bricks:

Use an embedding screw bolt, crock, and stick harness.

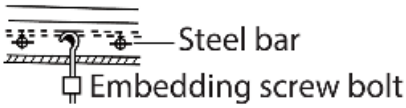

(Pipe hanging and embedding screw bolt)

Steel Roof Beam Structure:

Install and use the supporting steel angle.

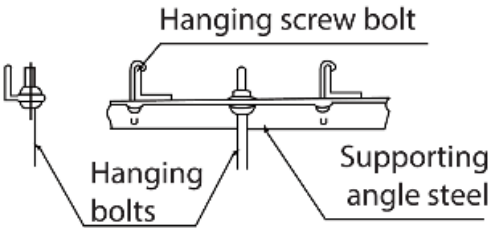

! CAUTION

- The unit's body must be completely aligned with the hole.
- Ensure that the unit and the hole are the same size before moving on.

2. Install and fit pipes and wires after you have finished installing the main body. When choosing where to start, determine the direction of the pipes to be drawn out. Especially in cases where there is a ceiling involved, align the refrigerant pipes, drain pipes, and indoor and outdoor lines with their connection points before mounting the unit.
3. Install hanging screw bolts.
   -Cut off the roof beam.
   -Strengthen the point at which the cut was made. Consolidate the roof beam.
4. After you select an installation location, align the refrigerant pipes, drain pipes, as well as the indoor and outdoor wires with their connection points before mounting the unit.
5. Drill 4 holes 4" (10cm) deep at the ceiling hook positions in the internal ceiling. Be sure to hold the drill at a 90° angle to the ceiling.
6. Secure the bolt using the washers and nuts provided.
7. Install the four suspension bolts.
8. Mount the indoor unit with at least two people to lift and secure it. Insert suspension bolts into the unit's hanging holes. Fasten them using the washers and nuts provided.
9. Position the indoor unit flat using a level indicator to prevent leaks.

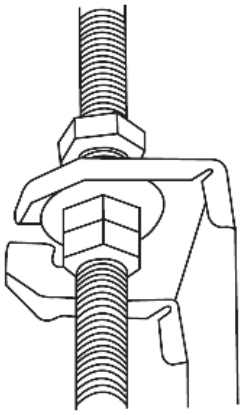

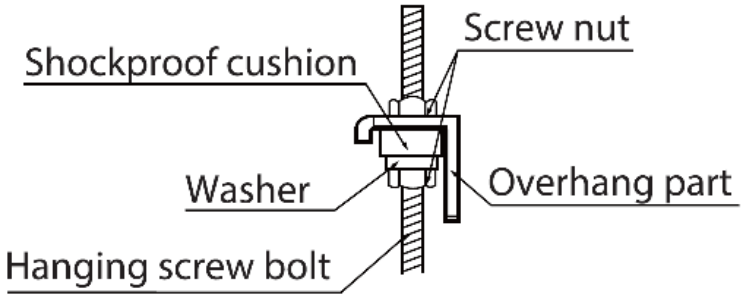

NOTE:
Confirm the minimum drain tilt is 1/100 or more.

3.5 Duct & Accessories Installation

1. Install the filter (optional) according to the size of the air inlet.
2. Install the canvas tie-in between the body and duct.
3. The air inlet and air outlet duct should be far apart enough to avoid a short-circuit of the air passage.
4. Connect the duct according to the following diagram:

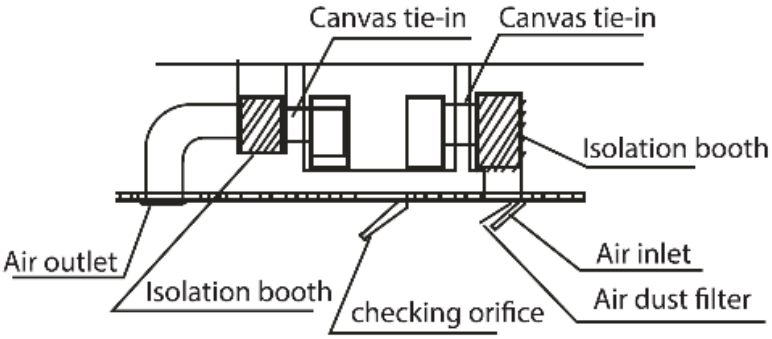

NOTE:
1. The minimum length of the duct should be more than 3.3 ft (1m), and attached to the air inlet with screws. (Applicable to the unit that the air inlet filter is not fastened by screws.)
2. The inlet of the air duct needs to be installed with a grille, which needs to be attached to the air duct with screws.
3. Do not place the connecting duct weight on the indoor unit.
4. When connecting the duct, use a nonflammable canvas tie-in to prevent vibration.
5. Insulation foam must be wrapped outside the duct to avoid condensate. An internal duct under-layer can be added to reduce noise, if needed.

3.6 Filter Installation

9-18K:

1. Take off the ventilation panel and flange.

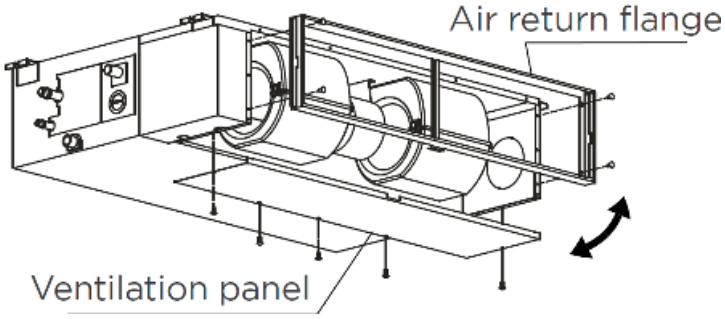

Bend the rear ventilation panel 90° along the dotted line into a descending ventilation panel.

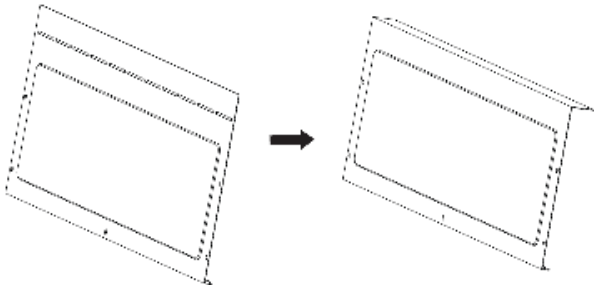

2. Change the mounting positions of the ventilation panel and air return flange.
3. When installing the filter mesh, fit it into the flange as illustrated in the following figure.

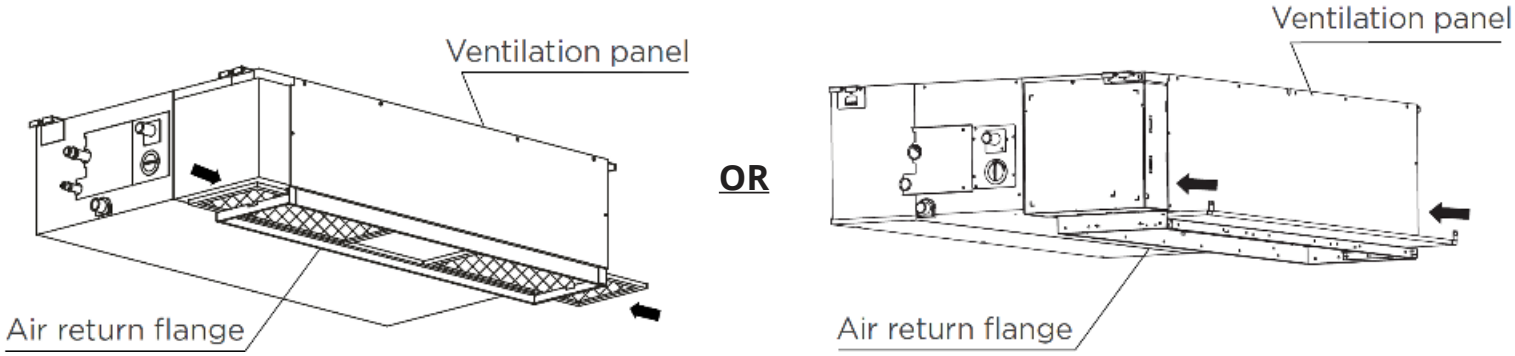

NOTE: All figures in this manual are for demonstration purposes only. The unit you purchased may be slightly different in design, though similar in shape.

24K:

1. Take off the ventilation panel and flange.

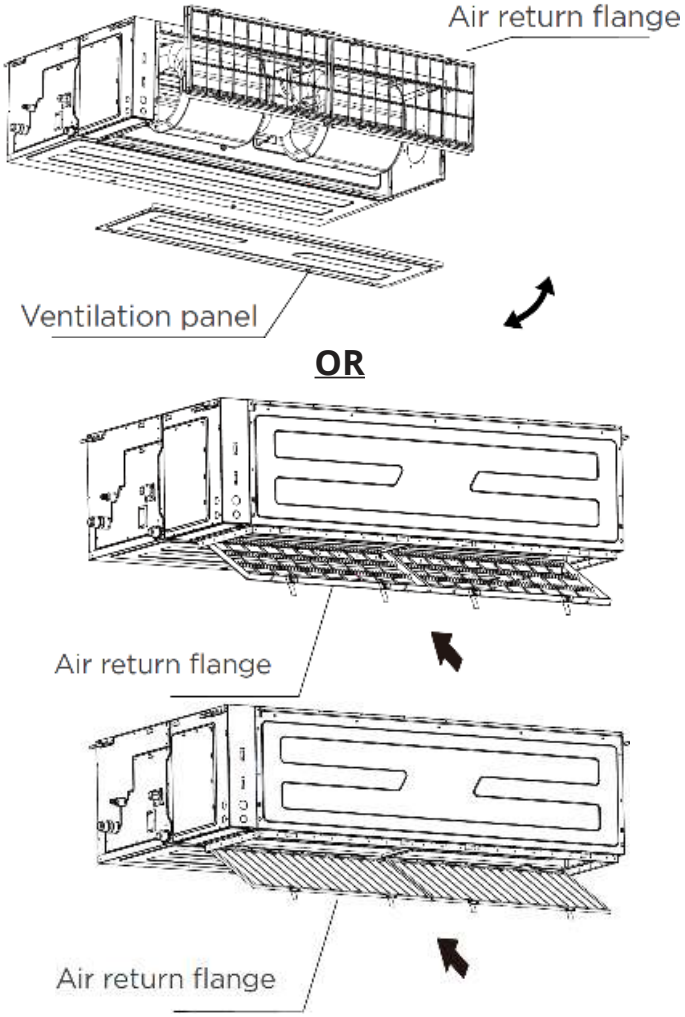

2. Change the mounting positions of the ventilation panel and air return flange.
3. When installing the filter mesh, fit it into the flange as illustrated in the following figure.

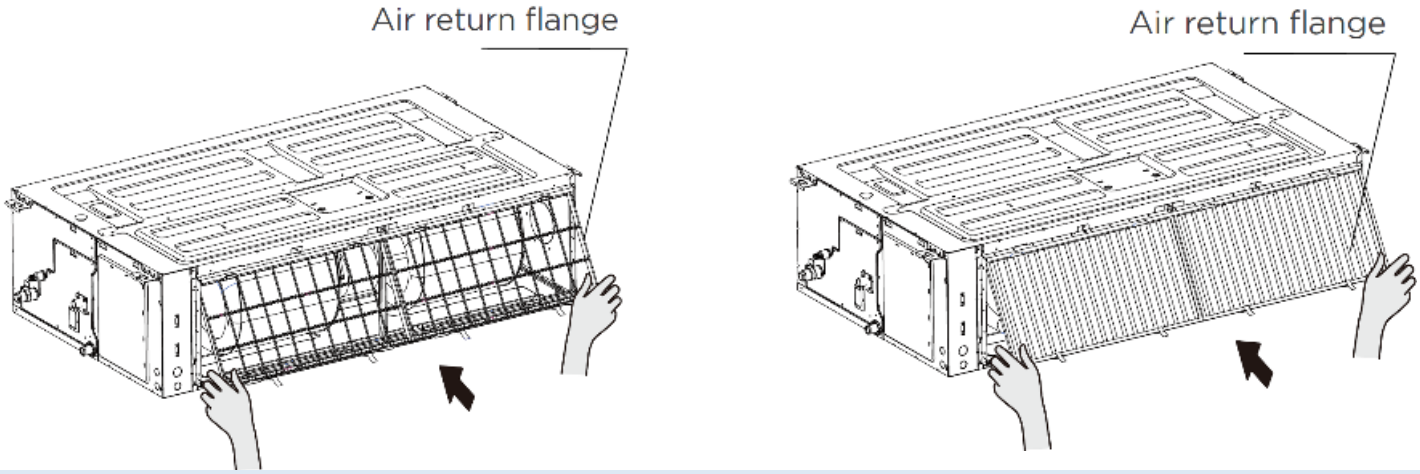

NOTE: All figures in this manual are for demonstration purposes only. The unit you purchased may be slightly different in design, though similar in shape.

3.7 Motor & Drain Pump Maintenance

(The rear ventilated panel is used as an example.)

Motor Maintenance:

1. Take off the ventilated panel.
2. Take off the blower housing.
3. Take off the motor.

9-18K:

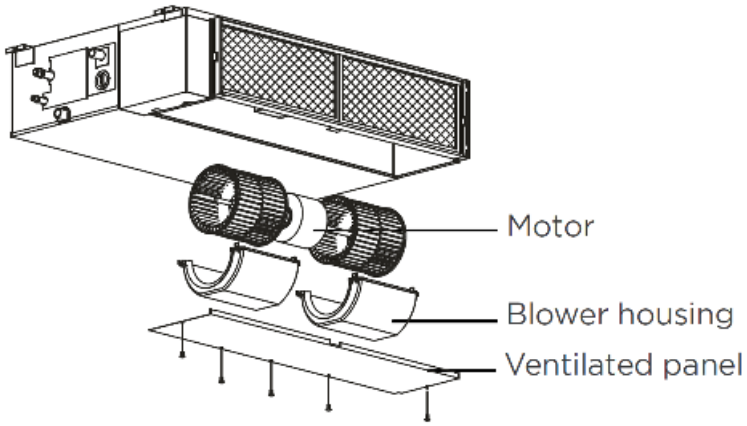

24K:

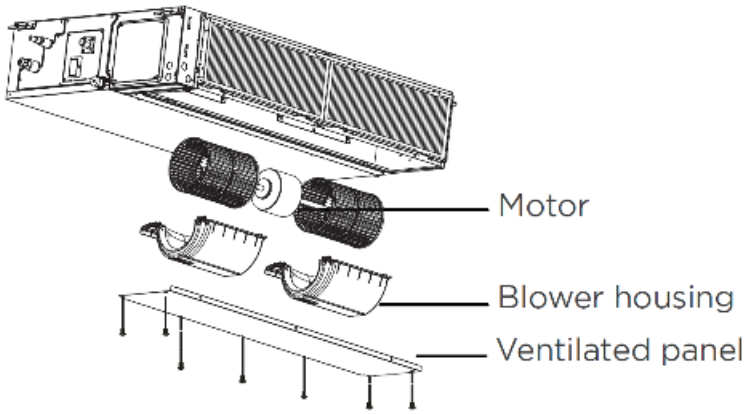

Pump Maintenance:

1. Remove four screws from the drain pump.
2. Unplug the pump power supply and water level switch cable.
3. Detach the pump.

9-18K:

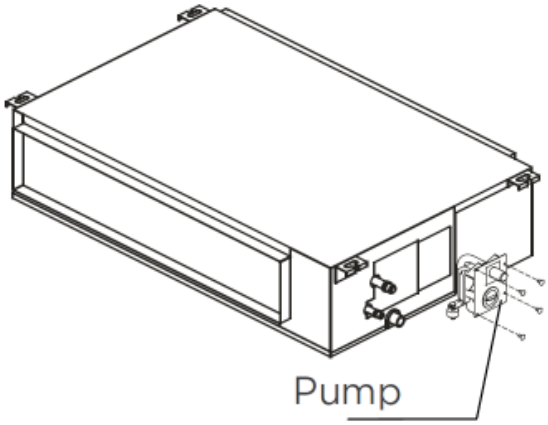

24K:

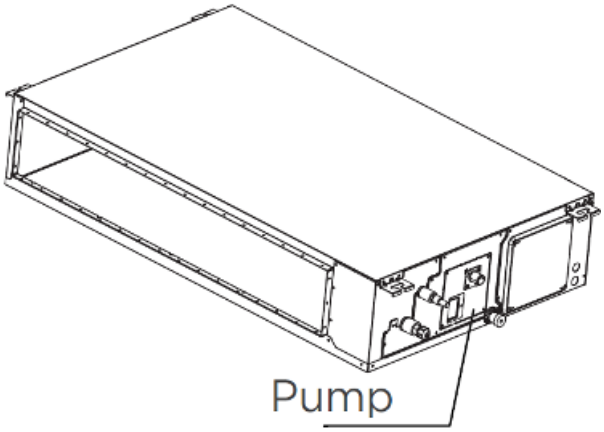

3.8 Drill Wall Hole

1. Determine the location of the wall hole based on the location of the outdoor unit.
2. Using a 2.5in (65mm) or 3.54in (90mm) core drill, drill a whole in the wall. Make sure that the hole is drilled at a slight downward angle, so that the outdoor end of the hole is lower than the indoor end by about 0.5in (12mm). This will ensure proper water drainage.
3. Place the protective wall cuff in the hole. This protects the edges of the hole and will help seal it when you finish the installation process.

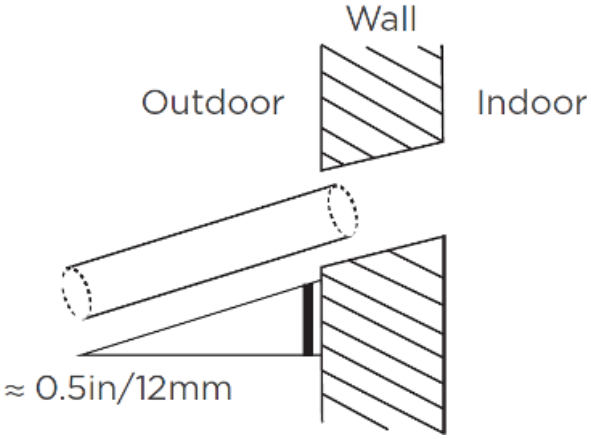

! CAUTION

When drilling the wall hole, make sure to avoid wires, plumbing, and other sensitive components.

3.9 Drain Hose Connection

The drainpipe is used to drain water away from the unit. Improper installation may cause unit and property damage.

! CAUTION

- Insulate all piping to prevent condensation, which could lead to water damage.
- If the drainpipe is bent or installed incorrectly, water may leak and cause a water-level switch malfunction.
- In HEAT mode, the outdoor unit will discharge water. Ensure that the drain hose is placed in an appropriate area to avoid water damage and slippage.
- **DO NOT** pull the drainpipe forcefully. This could disconnect it.

Note on Purchasing Pipes:
Installation requires a polyethylene tube (exterior diameter = 1.46-1.54in (3.7-3.9cm), interior diameter = 1.26in (3.2cm), which can be obtained at your local hardware store or dealer.

Indoor Drainpipe Installation:

Install the drainpipe as illustrated in the following figure.

1. Cover the drainpipe with heat insulation to prevent condensation and leakage.
2. Attach the mouth of the drain hose to the unit's outlet pipe. Sheath the mouth of the hose and clip it firmly with a pipe clasp.

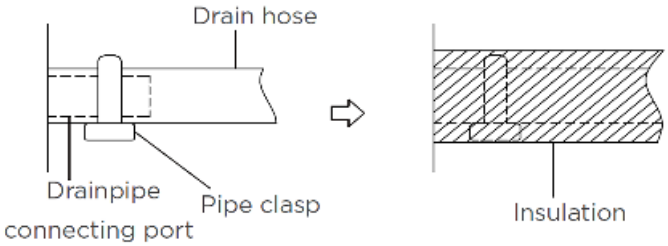

9-18K:

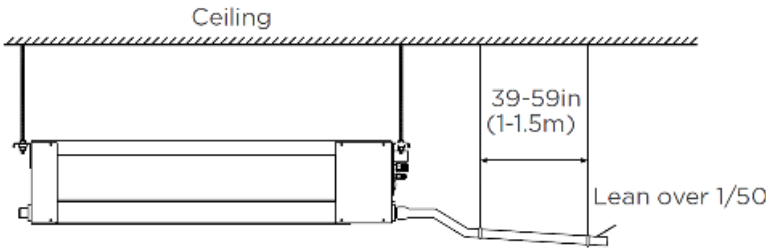

24K:

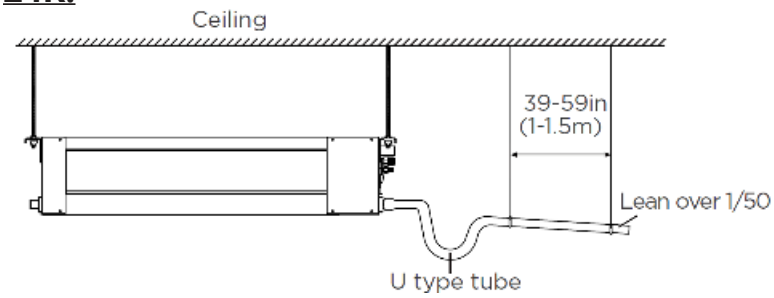

3. These units operate with a negative pressure at the drain connections and a drain trap is required. The trap needs to be installed as close to the unit as possible. Make sure the top of the trap is below the connection to the drain pan to allow complete drainage of the pan.

(Wall mounted)

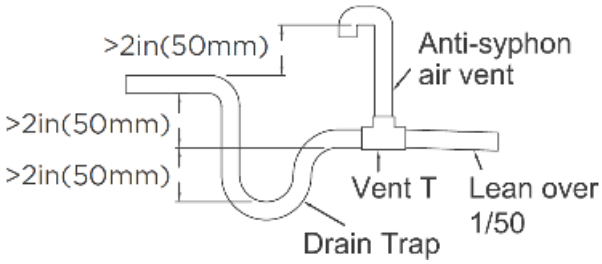

Drainpipe installation for units with a pump

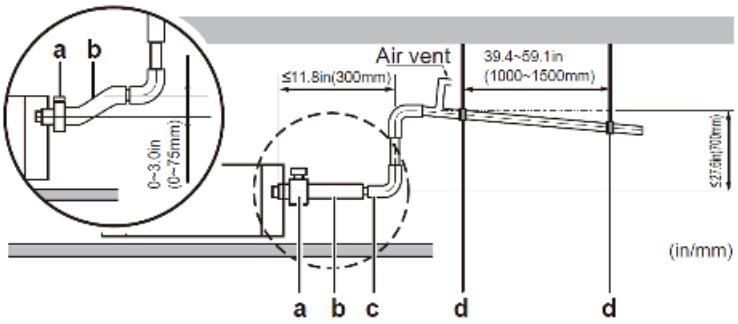

a Metal clamp (accessory)
b Drain hose (accessory)
c Rising drain piping (vinyl pipe of 0.98in(25mm) nominal diameter and 1.26in(32mm) outer diameter) (field supply)
d Hanging bars (field supply)

Note: When connecting multiple drainpipes, install the pipes as illustrated.

9-18K:

Units with a pump

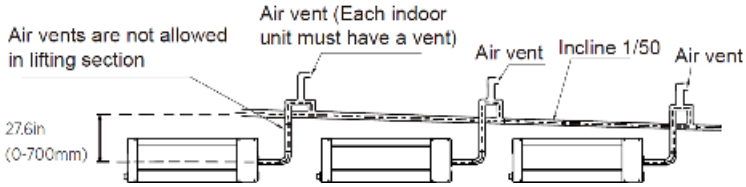

4. Pass the drain hose through the wall hole. Make sure the water drains to a safe location where it will not cause water damage or a slipping hazard.

Note: The drainpipe outlet should be at least 1.9in (5cm) above the ground. If it touches the ground, the unit may become blocked and malfunction. It is not recommended to discharge water directly into a sewer.

Drainage Test:

1. Remove the test cover. Fill the water pan with 2 liters of water.

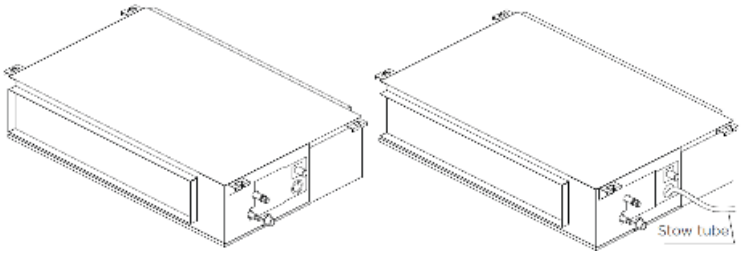

2. Turn on the unit in cooling mode. (Temporarily connect electrical wiring if not connected yet to perform the drainage test.) You will hear the drain pump. Check whether the water is discharged properly (a 1-minute lag is possible, depending on the length of the drain pipe). Check for leaks from the joints.
3. Turn the unit off and replace the cover.

Note on Drainpipe Installation (All Sizes):

- When using an extended drainpipe, tighten the indoor connection with an additional protection tube. This prevents it from pulling loose.
- The drainpipe should slope downward at a gradient of at least 1/100 to prevent water from flowing back into the unit.
- To prevent the pipe from sagging, space the hanging wires every 39"-59" (1-1.5m).
- If the outlet of the drainpipe is higher than the body's pump joint, use a lift pipe for the indoor unit's exhaust outlet. The lift pipe must be installed no higher than 21.7" (55cm) from the ceiling board. The distance between the unit and the lift pipe must be less than 7.9" (20cm). Incorrect installation could cause water to flow back into the unit and flood.
- To prevent air bubbles, keep the drain hose level or slightly tiles up (less than 3" / 75mm).

24K:

Units with a pump

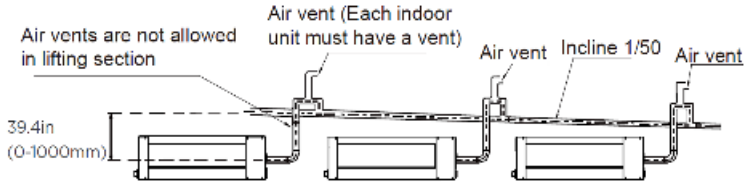

Drainage Test:

1. Temporarily connect electrical wiring.
2. Remove the switch box cover.
3. Connect the single-phase power supply (50Hz, 230V) to connections #1 and #2 on the terminal block for power supply and earth.
4. Reattach the switch box cover.

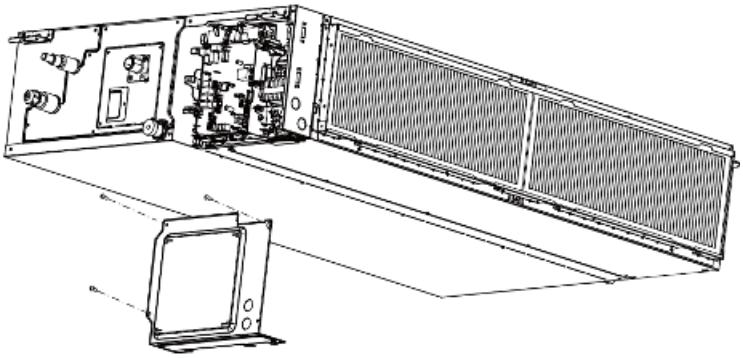

5. Turn on the power in cooling mode.
6. Gradually pour approximately 1L of water through the air discharge outlet, and check for leaks.

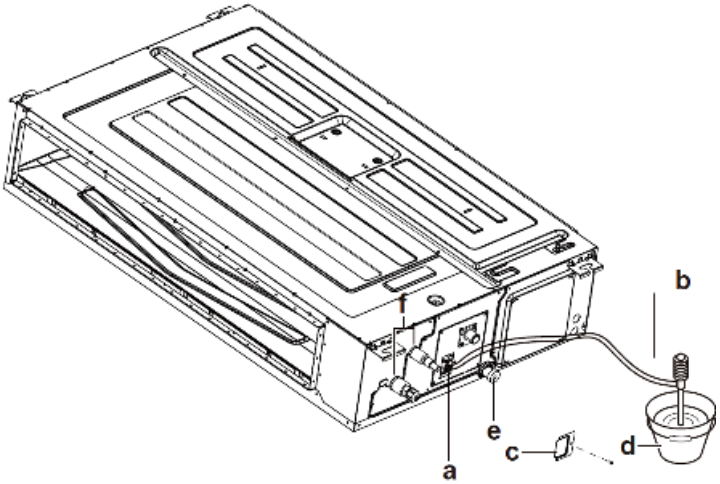

a. Water Inlet
b. Portable Pump
c. Water Inlet Cover
d. Bucket (adding water through water inlet)
e. Drain Outlet for Maintenance
f. Refrigerant Pipes

7. Turn off the power.
8. Disconnect the electrical wiring.
9. Remove the control box cover.
10. Disconnect the power supply and ground.
11. Reattach the control box cover.

4.1 Installation Location

NOTE: PRIOR TO INSTALLATION

Before installing the outdoor unit, you must choose an appropriate location. The following are standards that will help you choose an appropriate location for the unit.

Proper Installation Locations Meet the Following Standards:

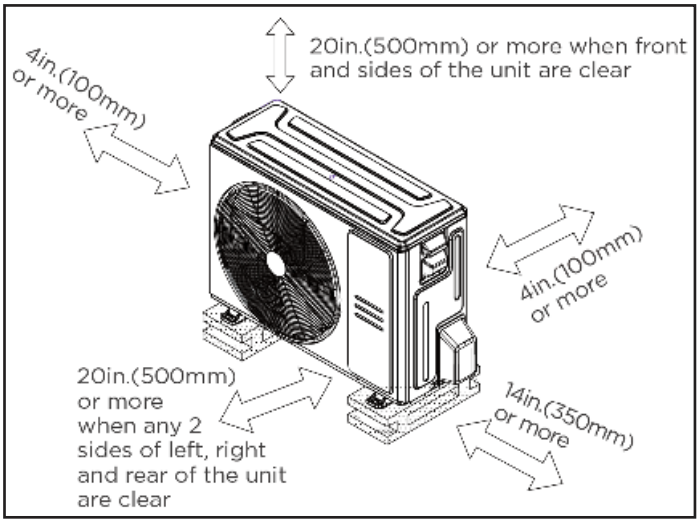

☑ *Meets all spatial requirements shown in Installation requirements above,.*

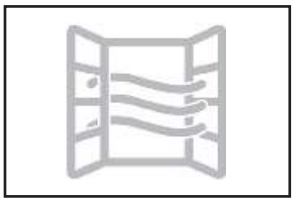

☑ *Good air circulation & ventilation.*

☑ *Firm & solid-the location can support the unit & will not vibrate.*

☑ *Noise from the unit will not disturb other people.*

☑ *Protected from prolonged periods of direct sunlight or rain.*

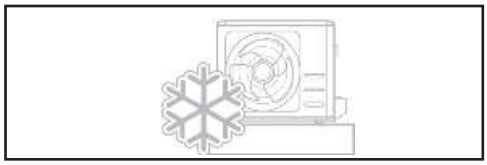

☑ *Where snowfall is anticipated, take appropriate measures to prevent ice buildup & coil damage.*

NOTE: Install the unit by following local codes and regulations. These may differ slightly between different regions.

! CAUTION: SPECIAL CONSIDERATIONS FOR EXTREME WEATHER

If the unit is exposed to heavy wind:
Install the unit so that the air outlet fan is at a 90° angle to the direction of the wind. If needed, build a barrier in front of the unit to protect it from extremely heavy winds.
If the unit is frequently exposed to heavy rain or snow:
Build a shelter above the unit to protect it from the rain or snow. Be careful not to obstruct air flow around the unit.
If the unit is frequently exposed to salty air (seaside):
Use outdoor unit that is specially designed to resist corrosion.

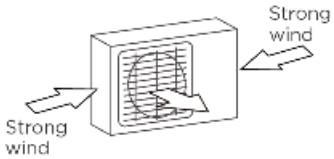

90° angle to the direction of the wind

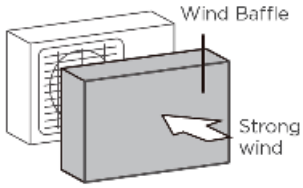

Build a wind Baffle to protect the unit

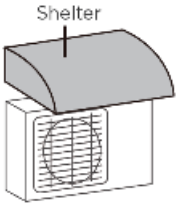

Build a shelter to protect the unit

DO NOT install the unit in the following locations:

- ⊘ *Near an obstacle that will block air inlets & outlets.*
- ⊘ *Near a public street, crowded areas, or where noise from the unit will disturb others.*
- ⊘ *In a location exposed to excessive amounts of salty air.*
- ⊘ *Near animals or plants that will be harmed by hot air discharge.*
- ⊘ *Near any source of combustible gas.*
- ⊘ *In a location exposed to large amounts of dust.*

4.2 Drain Joint Installation

NOTE: PRIOR TO INSTALLATION

Before bolting the outdoor unit in place, you must install the drain joint at the bottom of the unit. For the units with base pan built-in with multiple holes for proper draining during defrost, the drain joint does not need to be installed.

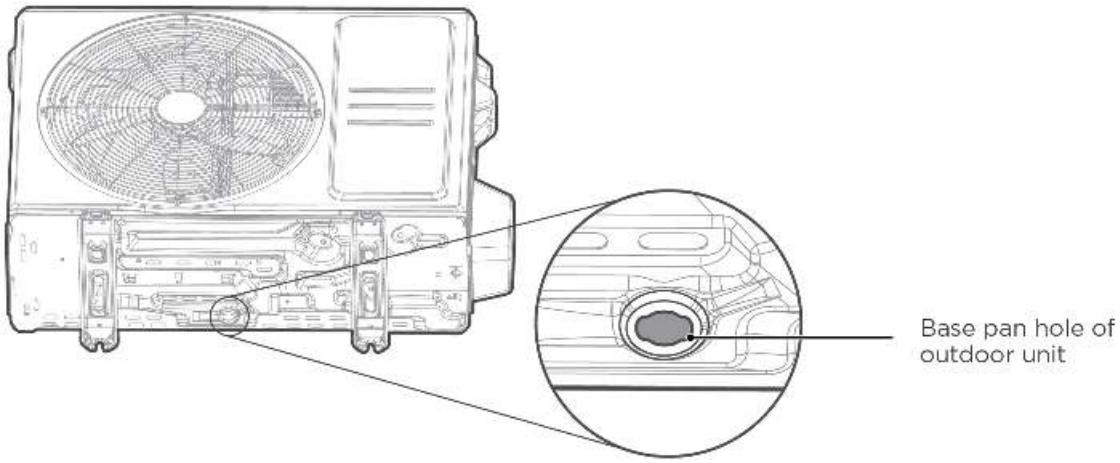

Step 1:
Find the base pan hole on the outdoor unit.

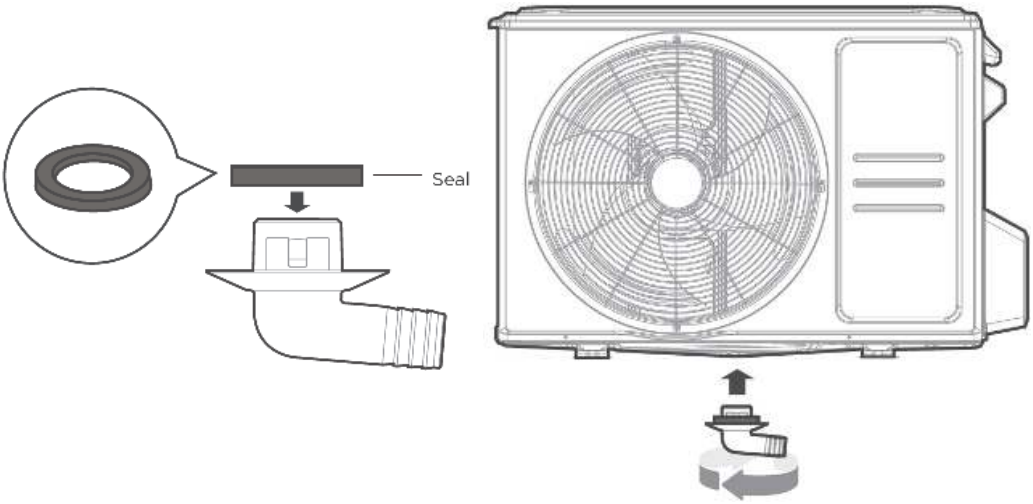

Step 2:
- Fit the rubber seal on the end of the drain joint that will connect to the outdoor unit.
- Insert the drain joint into the hole in the base pan of the unit.
- Connect a drain hose extension (not included) to the drain joint to redirect water from the unit during heating mode.

NOTE: In cold climates, ensure that the drain hose is as vertical as possible to ensure swift water drainage. If water drains too slowly, it can freeze in the hose and flood the unit.

4.3 Anchor Outdoor Unit

⚠ WARNING

When drilling into concrete, eye protection is recommended at all times.

- The outdoor unit can be anchored to the ground or to a wall-mounted bracket with bolts (M10). Prepare the installation base on the unit according to the dimensions below.
- The following is a list of different outdoor unit sizes and the distance between their mounting feet. Prepare the installation base of the unit according to the dimensions below.

Front View

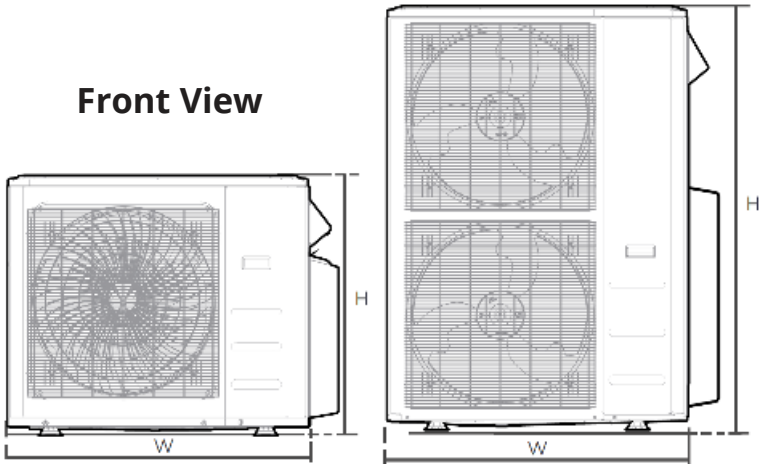

Top View

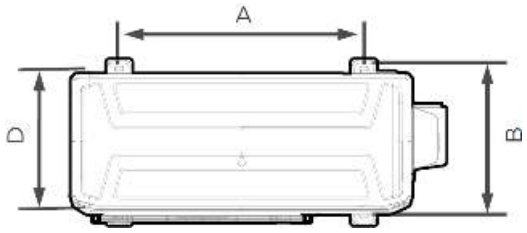

Outdoor Unit Model	Outdoor Unit Dimensions W x H x D	Mounting Dimensions	
		Distance A	Distance B
O-ES-09-HP-C-230C-O1	30.1in x 21.8in x 11.9in (765mm x 555mm x 303mm)	17.8in (452mm)	11.3in (286mm)
O-ES-12-HP-C-230C-O1			
O-ES-18-HP-C-230C-O1	35.0in x 26.5in x 13.5in (890mm x 673mm x 342mm)	26.1in (663mm)	13.9in (354mm)
MULTI3-18HP230C-O			
O-ES-24-HP-C-230C-O1	37.2in x 31.9in x 16.14in (946mm x 810mm x 410mm)	26.5in (673mm)	15.87in (403mm)
MULTI4-27HP230C-O			
MULTI5-36HP230C-O			
MULTI6-48HP230C-O	37.5in x 52.5in x 16.34in (952mm x 1333mm x 415mm)	24.96in (634mm)	15.9in (404mm)

Rows of Series Installation

The relations between H, A, and L are as follows:

	L	A
L ≤ H	L ≤ 1/2H	9.8in (250mm) or more
	1/2H < L ≤ H	11.8in (300mm) or more
L > H	Cannot be installed	

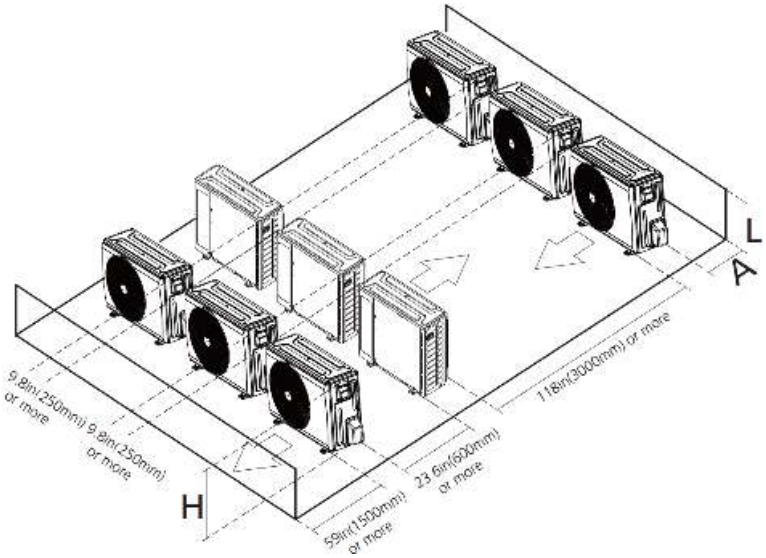

4.4 Pipe Length

When connecting refrigerant piping, do not let substances or gases other than the specified refrigerant enter the unit. The presence of other gases or substances will lower the unit's capacity and can cause abnormally high pressure in the refrigeration cycle. This can cause explosion or injury.

Note on Pipe Length:
Ensure that the length of the refrigerant pipe, the number of bends, and the drop height between the indoor and outdoor units meets the requirements shown in the following table.

Model	Length of Piping	Maximum Drop Height
9K/12K	82ft / 25m	49.2ft / 15m
18K	98.4ft / 30m	65.6ft / 20m
24K	164ft / 50m	82ft / 25m

! CAUTION

If oil flows back into the outdoor unit's compressor, this might cause liquid compression or deterioration of the oil return. Oil traps in the rising gas piping can prevent this.
An oil trap should be installed every 20ft (6m) of vertical suction line riser (<36K BTU/h).
An oil trap should be installed every 32.8ft (10m) of vertical suction line riser (≥36K BTU/h).

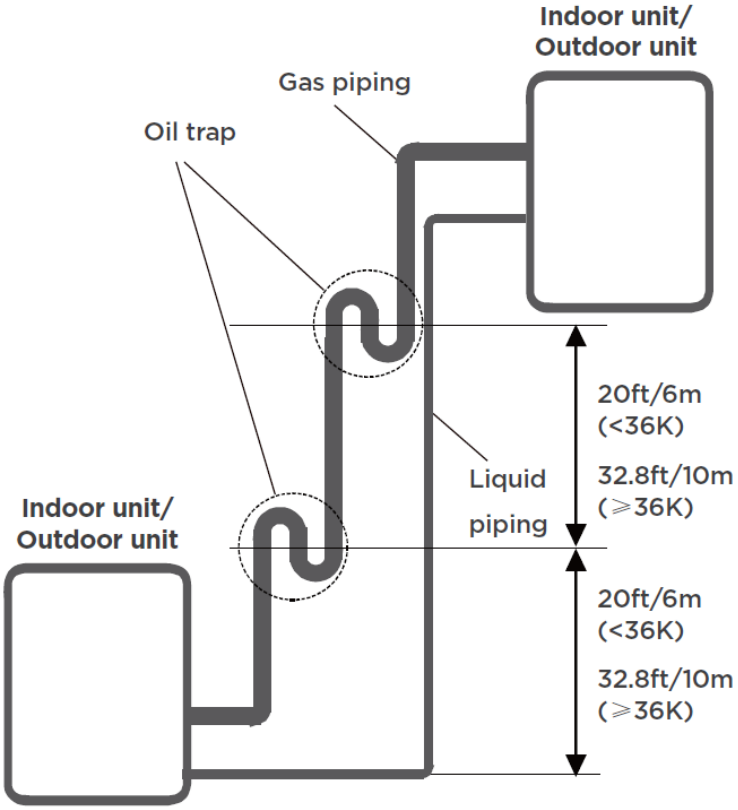

4.5 Refrigerant Connection Instructions

CAUTION

- The branching pipe must be installed horizontally. An angle of more than 10° may cause malfunction.
- DO NOT install the connecting pipe until both indoor and outdoor units have been installed.
- Insulate both the gas and liquid piping to prevent condensation.

Step 1: Cut Pipes

When preparing refrigerant pipes, take extra care to cut and flare them properly. This will ensure efficient operation and minimize the need for future maintenance.

1. Measure the distance between indoor and outdoor units.
2. Using a pipe cutter, cut the pipe a little longer than the measured distance.
3. Make sure that the pipe is cut at a perfect 90° angle.

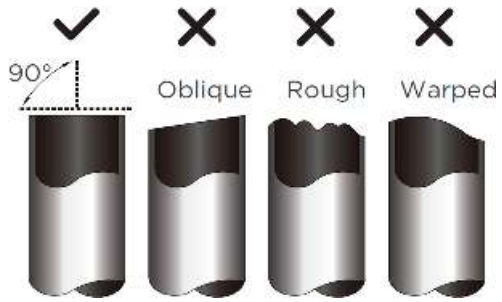

DO NOT DEFORM PIPE WHILE CUTTING

Take extra precautions to not damage or deform the pipe while cutting. This will drastically reduce the heating efficiency of the unit.

Step 2: Remove Burrs

Burrs can affect the air-tight seal of refrigerant piping connection. They must be completely removed.

1. Hold the pipe at a downward angle to prevent burrs from falling into the pipe.
2. Using a reamer or deburring tool, remove all burrs from the cut section of the pipe.

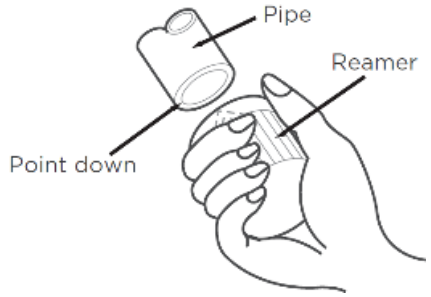

Step 3: Flare Pipe Ends

Proper flaring is essential to achieve an airtight seal.

1. After removing burrs from the cut pipe, seal the ends with PVC tape to prevent foreign materials from entering the pipe.
2. Sheath the pipe with insulating material.
3. Place flare nuts on both ends of the pipe. Make sure they are facing in the right direction. **Note:** You can not put them on or change their direction after flaring.

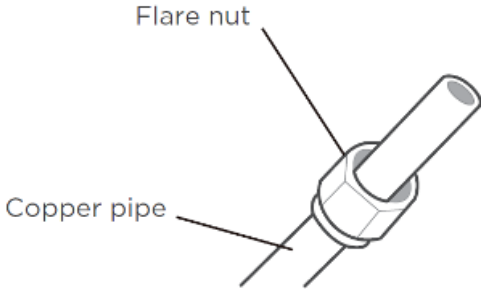

4. When ready to perform flaring work, remove PVC tape from the ends of the pipe.
5. Clamp flare form on the end of the pipe. The end of the pipe must extend beyond the edge of the flare form in accordance with the dimensions shown in the table below.

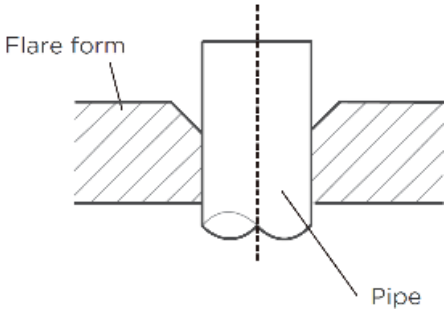

6. Place flaring tool onto the form.
7. Turn handle of the flaring tool clockwise until the pipe is fully flared.
8. Remove the flaring tool and flare form, then inspect the end of the pipe for cracks and even flaring.

Piping Extension Beyond Flare Form

Pipe Gauge	Tightening Torque	Flare Dimension (A)
Ø1/4in (Ø6.35mm)	18~20N.m (180~200kgf.cm)	0.33~0.34in (8.4~8.7mm)
Ø3/8in (Ø9.52mm)	32~39N.m (320~390kgf.cm)	0.52~0.53in (13.2~13.5mm)
Ø1/2in (Ø12.7mm)	49~59N.m (490~590kgf.cm)	0.64~0.65in (16.2~16.5mm)
Ø5/8in (Ø16mm)	57~71N.m (570~710kgf.cm)	0.76~0.78in (19.2~19.7mm)
Ø3/4in (Ø19mm)	67~101N.m (670~1010kgf.cm)	0.91~0.93in (23.2~23.7mm)
Flare Shape		

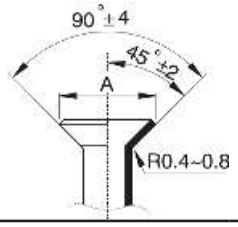

Step 4: Connect Pipes

Connect the copper pipes to the indoor unit first, then connect it to the outdoor unit. You should first connect the low-pressure pipe, then the high-pressure pipe.

1. When connecting the flare nuts, apply a thin coat of refrigeration oil to the flared ends of the pipes.
2. Align the center of the two pipes that you will connect.

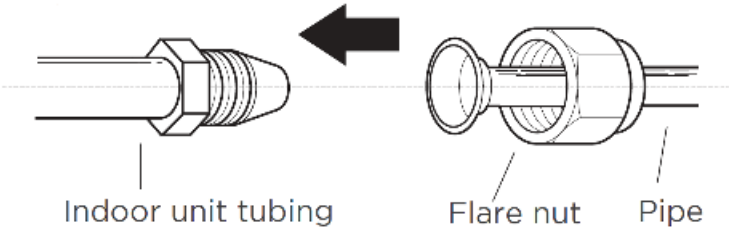

3. Tighten the flare nut snugly by hand.
4. Using a wrench, grip the nut on the unit tubing.
5. While firmly gripping the nut, use a torque wrench to tighten the flare nut according to the torque values in above tables.

NOTE: Use both a spanner and a torque wrench when connecting or disconnecting pipes to/from the unit.

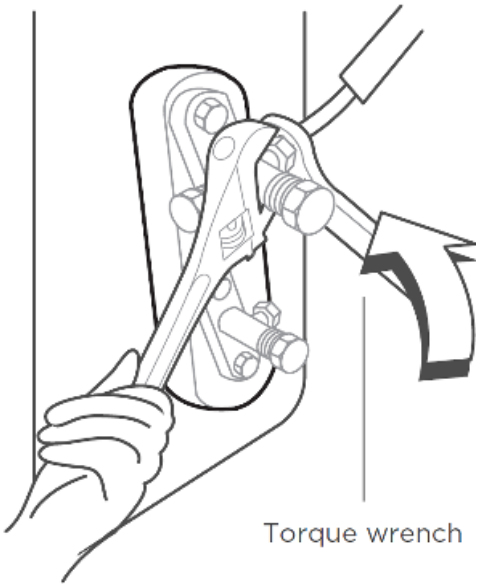

! CAUTION

- Be sure to wrap insulation around the piping. Direct contact with the bare piping may result in burns or frostbite.
- Make sure the pipe is properly connected. Over-tightening may damage the bell mouth and under-tightening may lead to leakage.

NOTICE-MINIMUM BEND RADIUS

Carefully bend the tubing in the middle according to the diagram below. DO NOT bend the tubing more than 90° or more than 3 times.

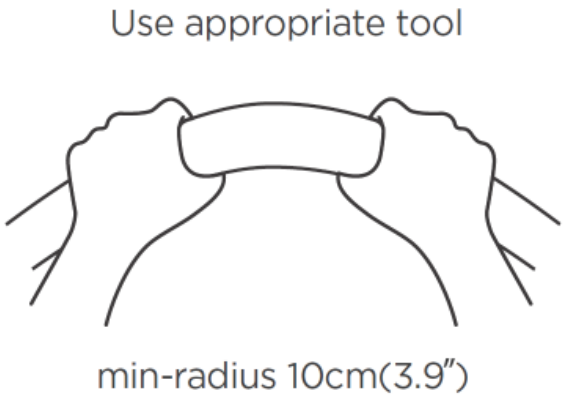

- After connecting the copper pipes to the indoor unit, wrap the power cable, signal cable, and the piping together with binding tape.

NOTICE

DO NOT intertwine or cross the signal cable with any other wiring.

4.6 Wiring Precautions

⚠ WARNING

Before performing any electrical work, read the following warnings and turn off power to the system.

1. All wiring must comply with local and national electrical codes, regulations, and must be installed by a licensed electrician.
2. All electrical connections must be made according to the electrical connection diagram located on the panels of the indoor and outdoor units
3. If there is a serious safety issue with the power supply, stop work immediately. Explain your reasoning to the client, and refuse to install the unit until the safety issue has been resolved properly.
4. Power voltage should be within 90-110% of rated voltage. Insufficient power supply can cause malfunction, electrical shock, or fire.
5. Installation of an external surge suppressor at the outdoor disconnect is recommended.
6. If connecting power to fixed wiring, a switch or circuit breaker that disconnects all poles and has a contact separation of at least 1/8in. (3mm) must be incorporated in the fixed wiring. The qualified technician must use an approved circuit breaker or switch.
7. Only connect the unit to an individual branch circuit outlet. Do not connect another appliance to that outlet.
8. Make sure to properly ground the unit.
9. Every wire must be firmly connected. Loose wiring can cause the terminal to overheat, resulting in product malfunction and possible fire.
10. Do not let wires touch or rest against refrigerant tubing, the compressor, or any moving parts within the unit.
11. To avoid getting an electric shock, never touch the electrical components soon after the power supply has been turned off. After turning off the power, always wait 10 minutes or more before you touch the electrical components.
12. Make sure not to cross your electrical wiring with your signal wiring. This may cause distortion, interference, or possibly damage to the circuit boards.
13. No other equipment should be connected to the same power circuit.
14. Connect the outdoor wires before connecting the indoor wires.

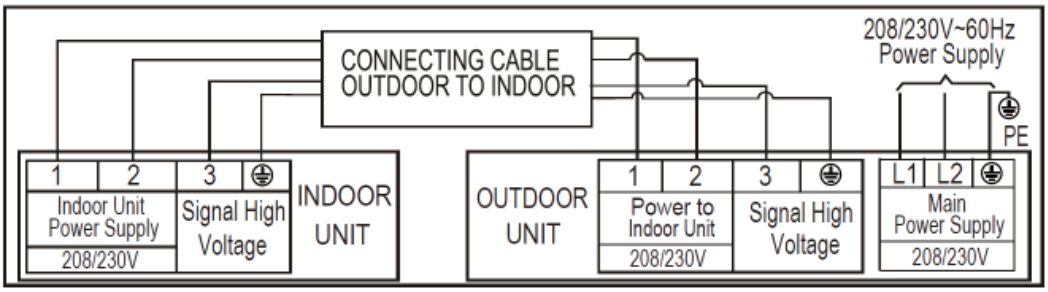

Connection Diagram (9K/12K/18K/24K)

NOTE:
The illustrations are for explanatory purposes only. Your unit may be slightly different. The actual shape shall prevail.

NOTE ON CIRCUIT BREAKER:
When the maximum current of the unit is more than 16A, a circuit breaker or leakage protection switch with protective device shall be used (purchased separately). When the maximum current of the air conditioner is less than 16A, the power cord of the unit shall be equipped with a plug (purchased separately). In North America, the appliance should be wired according to the NEC and CEC requirements.

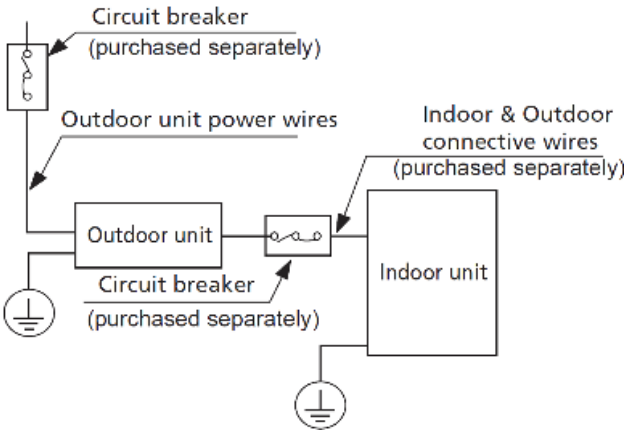

4.7 Outdoor Unit Wiring

1. Prepare cable for connection.
   a. Choose the right cable size.
   The size of the power supply cable, signal cable, fuse, and switch needed is determined by the maximum current of the unit. Refer to the nameplate to choose the right cable, fuse, and switch.
   NOTE: In North America, please choose the right cable size according to the Minimum Circuit Ampacity indicated on the nameplate of the unit.
   b. Using wire strippers, strip the rubber jacket from both ends of the signal cable to reveal approximately 5.9in (150mm) of wire.
   c. Strip the insulation from the ends.
   d. Using a wire crimper, crimp u-lugs on the ends.

NOTE: When connecting the wires, strictly follow the wiring diagram found inside the electrical box cover.

2. (Outdoor Unit A) Remove the 2 screws fixed on the front panel and side panel, then take it down to perform wire connection.
   (Outdoor Unit B) Unscrew the electrical wiring cover and remove it.
3. Connect the u-lugs to the terminals. Match the wire colors/labels with the labels of each wire to its corresponding terminal.
4. Clamp down the cable with the cable clamp.
5. Insulate unused wires with electrical tape. Keep them away from any electrical or metal parts.
6. Reinstall the cover of the electric control box.

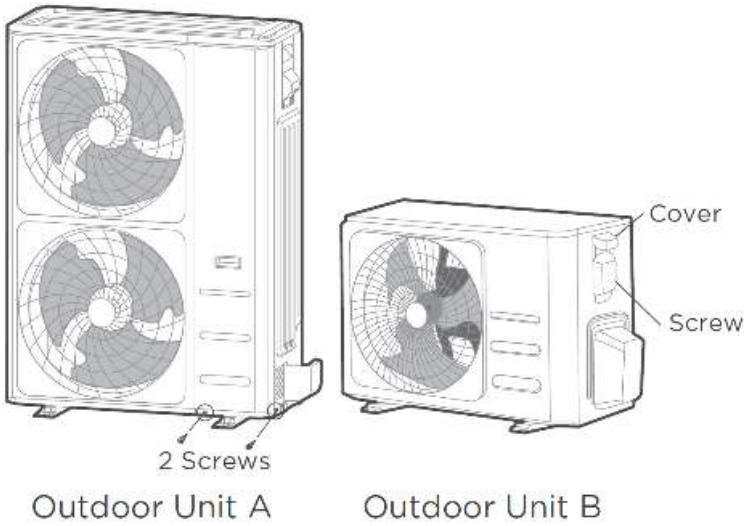

4.8 Indoor Unit Wiring

1. Prepare cable for connection.
   a. Using wire strippers, strip the rubber jacket from both ends of the signal cable to reveal approximately 5.9in (150mm) of wire.
   c. Strip the insulation from the ends.
   d. Using a wire crimper, crimp u-lugs on the ends.
2. Remove the cover of the electric control box on your indoor unit.
3. Connect the u-lugs to the terminals. Match the wire colors/labels with the labels of each wire to its corresponding terminal. Refer to the serial number and wiring diagram located on the cover of the electric control box.

9-18K:

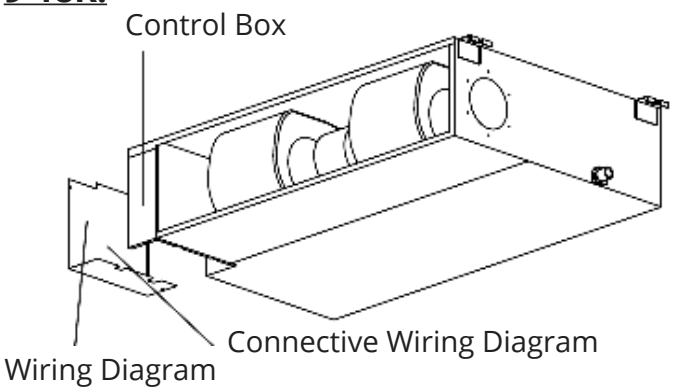

24K:

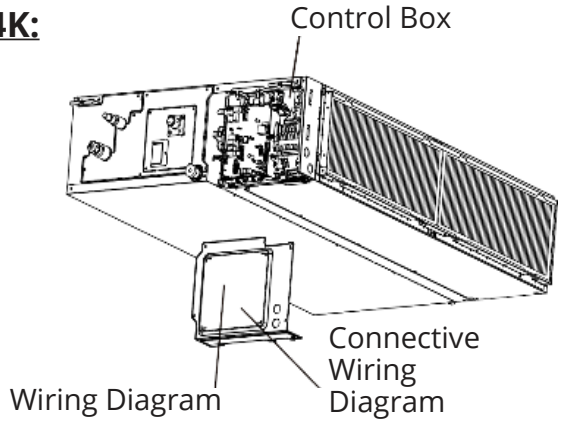

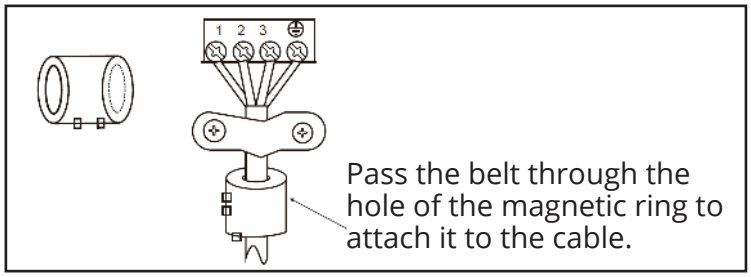

4. Clamp down the cable with the cable clamp. The cable must not be loose or pull on the u-lugs.

9-18K:

5. The display box needs to be installed in the electric control box, then attached to the electrical control box sheet metal clips.

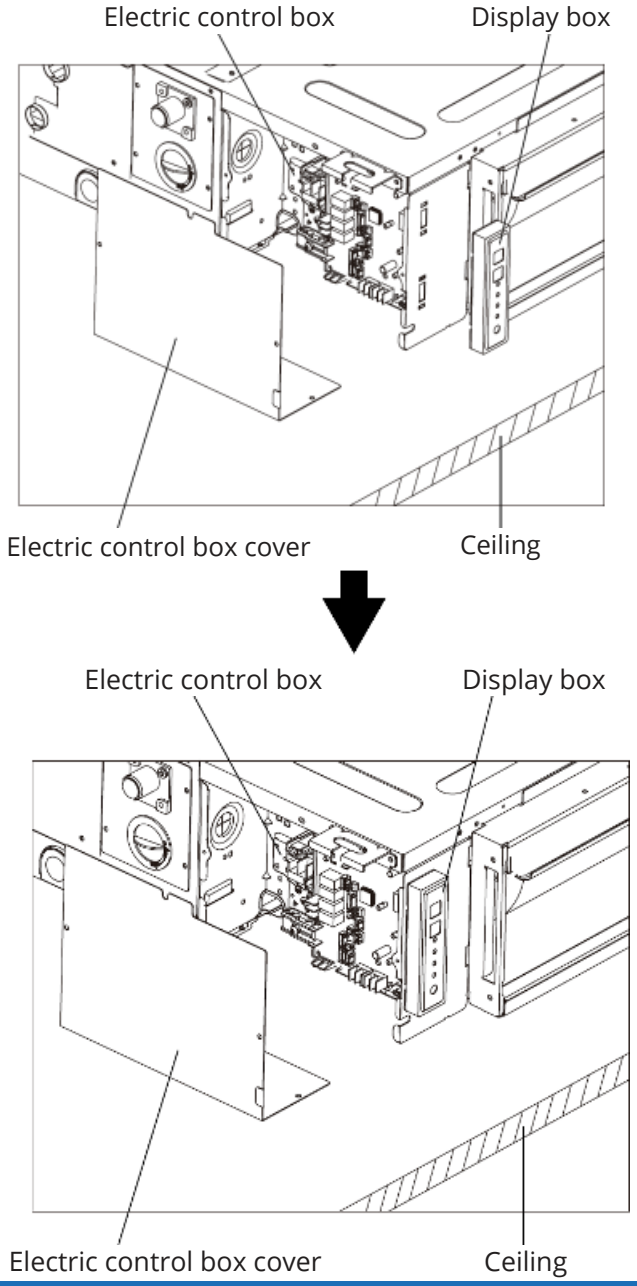

Note:
- The display box needs to be installed on the outside of the indoor unit.
- The wiring of the wired controller needs to be completed inside the electric control box.
- The indoor unit needs to be ceiling mounted.

6. Reattach the electric control box cover.

! CAUTION

- When connecting the wires, strictly follow the wiring diagram.
- The refrigerant circuit can become very hot. Keep the interconnection cable away from the copper tube.

24K:

5. Pass the wire through the knock-out hole on the electric control box.

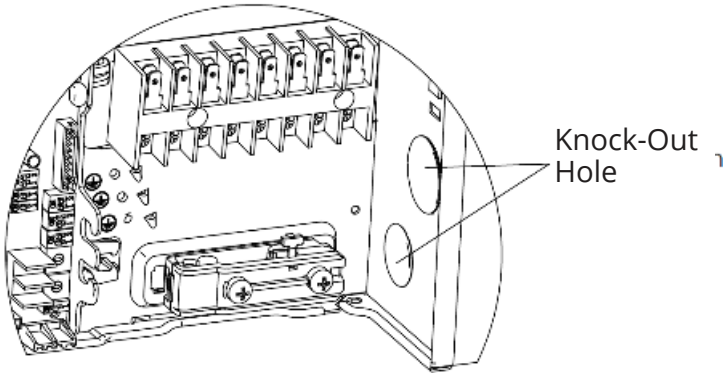

6. Reattach the electric control box cover.
7. If the indoor unit is equipped with a display box, it needs to be realistic and installed in the electric control box.

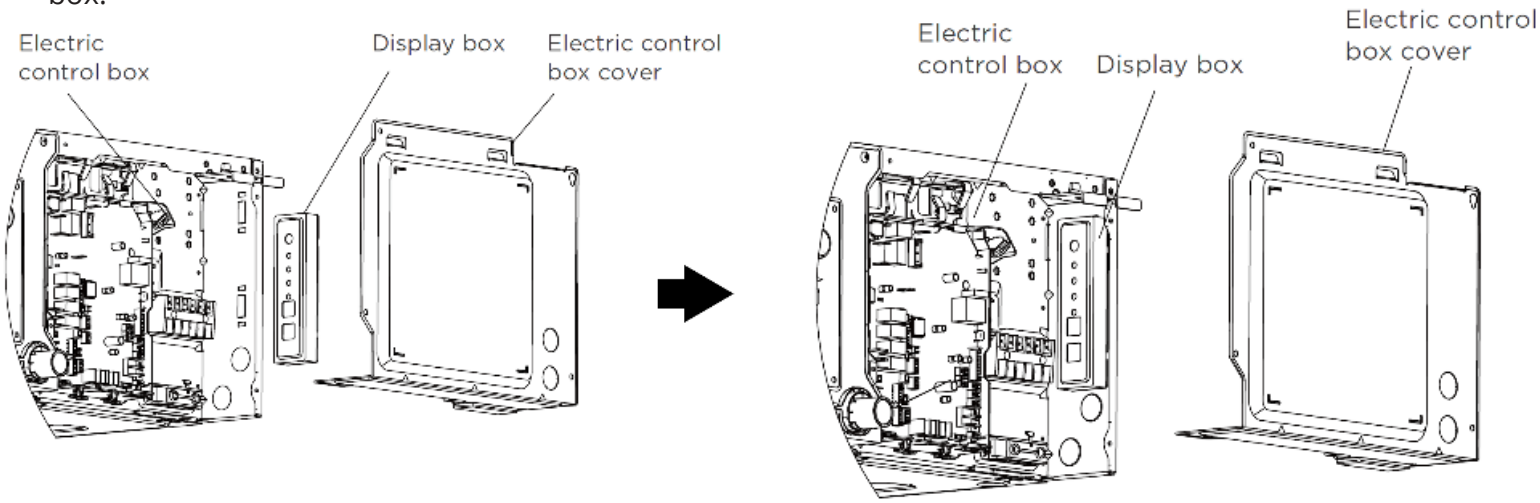

! CAUTION

- When connecting the wires, strictly follow the wiring diagram.
- The refrigerant circuit can become very hot. Keep the interconnection cable away from the copper tube.
- The holes on the cover of the electronic control box must be threaded through with armored wires.

5.1 Preparations & Precautions

Air and foreign matter in the refrigerant circuit can cause abnormal rises in pressure, which can damage the unit, reduce its efficiency, and cause injury. Use a vacuum pump and manifold gauge to evacuate the refrigerant circuit, removing any non-condensible gas and moisture from the system.

Evacuation should be performed upon initial installation and when the unit is relocated.

Before Performing Evacuation:

☑ Check to make sure the connective pipes between the indoor and outdoor units are connected properly.
☑ Check to make sure all wiring is connected properly.

5.2 Evacuation Instructions

1. Connect the charge hose of the manifold gauge to the service port on the outdoor unit's low pressure valve.
2. Connect another charge hose from the manifold gauge to the vacuum pump.
3. Open the Low Pressure side of the manifold gauge. Keep the High Pressure side closed.
4. Turn on the vacuum pump to evacuate the system.
5. Run the vacuum for at least 15 minutes or until the Compound Meter reads -76cmHG (-10^5Pa).
6. Close the Low Pressure side of the manifold gauge and turn off the vacuum pump.
7. Wait for 5 minutes, then ensure there had been no change in system pressure.
8. If there is a change in system pressure, refer to the Gas Leak section in this manual for information on how to check for leaks. If there is no change in system pressure, unscrew the cap from the packed valve (high pressure valve).
9. Insert hexagonal wrench int the packed valve (high pressure valve) and open the valve by turning the wrench in a 1/4 counterclockwise turn. Listen for gas to exit the system, then close the valve after 5 seconds.
10. Watch the pressure gauge for one minute to make sure that there is no change in pressure. The pressure gauge should read slightly higher than atmospheric pressure.
11. Remove the charge hose from the service port.
12. Using a hexagonal wrench, fully open both the high pressure and low pressure valves.
13. Tighten valve caps on all three valves (service port, high pressure, low pressure) by hand. You may tighten it further using a torque wrench if needed.

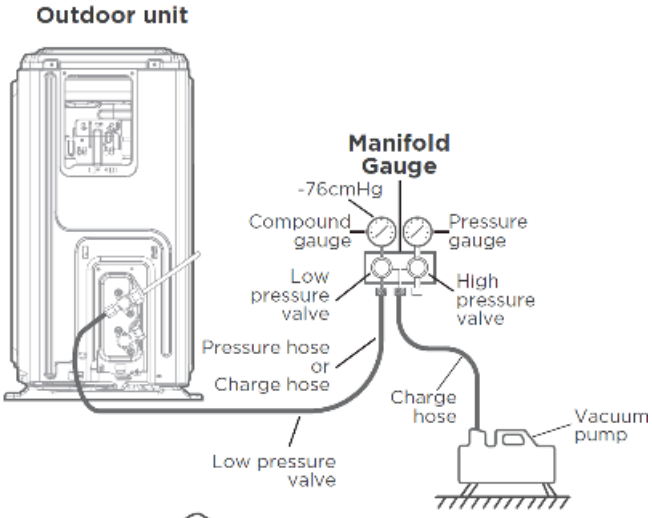

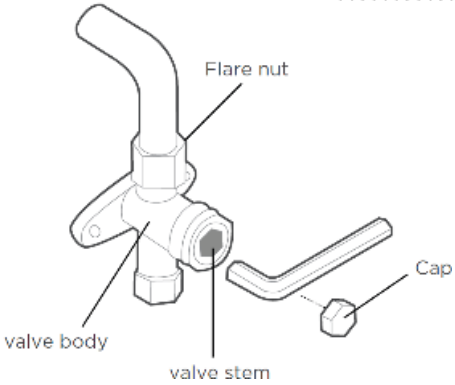

! CAUTION

When opening valve stems, turn the hexagonal wrench until it hits against the stopper. Do not try to force the valve to open further.

5.3 Adding Refrigerant

Some systems require additional charging depending on pipe lengths. The standard pipe length varies according to local regulations. For example, in North America, the standard pipe length is 25ft (7.5m). In other areas, the standard pipe length is 25 ft (7m). The refrigerant should be charged from the service port on the outdoor unit's low pressure valve. The additional refrigerant to be charged can be calculated using the following formula:

Refrigerant	Liquid Side Diameter	
	Φ1/4in (Φ6.35mm)	Φ 3/8in (Φ9.52mm)
R454B: (Orifice tube in the indoor unit)	Total pipe length - standard pipe length x 15g (0.16oz)/m(ft)	Total pipe length - standard pipe length x 30g (0.32oz)/m(ft)

! CAUTION

DO NOT mix refrigerant types.

6.1 Test Run

A test run must be performed after the entire system has been completely installed. Confirm the following points before performing the test:

a) Both the indoor and outdoor units are properly installed.

b) All piping and wiring are properly connected.

c) There are no obstacles near the inlet and outlet of the unit that might cause poor performance or product malfunction.

d) The refrigeration system does not leak.

e) The drainage system is unimpeded and drains to a safe location.

f) All heating insulation is properly installed.

g) All grounding wires are properly connected.

h) The lengths of the piping and additional refrigerant stow capacity have been recorded.

i) The power voltage is the correct voltage for the unit.

! CAUTION

Failure to perform the test run may result in unit damage, property damage, or personal injury.

1. Open both the liquid and gas stop valves.
2. Turn on the main power switch and allow the unit to warm up.
3. Set the unit to COOL mode.
4. For the Indoor Unit:

   a) Ensure the remote control and its buttons work properly.

   b) Ensure the louvers move properly and can be changed using the remote control.

   c) Double check to see if the room temperature is being registered correctly.

   d) Ensure the indicators on the remote control and the display panel work properly.

   e) Ensure the manual buttons on the indoor unit work properly.

   f) Check to see that the drainage system is unimpeded and draining smoothly.

   g) Ensure there is no vibration or abnormal noise during operation.

5. For the Outdoor Unit:

   a) Check to see if the refrigeration system is leaking.

   b) Make sure there is no vibration or abnormal noise during operation.

   c) Ensure the wind, noise, and water generated by the unit are not disruptive to neighbors or a safety hazard.

6. Drainage Test:

   a) Ensure the drainpipe flows smoothly. New buildings should perform this test before finishing the ceiling.

   b) Remove the test cover. Add 2,000ml of water to the tank through the attached tube.

   c) Turn on the main power switch and run the air conditioner in COOL mode.

   d) Listen to the sound of the drain pump to see if it makes any unusual noises.

   e) Check to see that the water is discharged. It may take up to one minute before the unit begins to drain depending on the drainpipe.

   f) Make sure that there are no leaks in any of the piping.

   g) Stop the unit. Turn off the main power switch and reinstall the test cover.

Note: If the unit malfunctions or does not operate according to your expectations, refer to the Troubleshooting section of the Owner's Manual before calling customer service.

6.2 Care & Maintenance

ELECTRICAL WARNING

BEFORE PERFORMING ANY CLEANING OR MAINTENANCE, TURN OFF THE MAIN POWER TO THE SYSTEM.

CAUTION

Use only a soft, dry cloth to wipe the unit clean. If the unit is especially dirty, you can use a cloth soaked in warm water to wipe it clean.

- **DO NOT** use chemicals or chemically treated cloths to clean the unit.
- **DO NOT** use benzene, paint thinner, polishing powder, or other solvents to clean the unit. They can cause the plastic service to crack or become deformed.
- **DO NOT** use water hotter than 104° (40°C) to clean the front panel. This can cause the panel to deform or become discolored.
- Before changing the filter or cleaning, turn off the unit and disconnect its power supply. Removal and maintenance must be performed by a certified technician.
- When removing the filter, do not touch any metal parts within the unit. The sharp metal edges can cut you.
- Do not use water to clean the inside of the indoor unit. This can destroy insulation and cause electrical shock.
- Do not expose the filter to direct sunlight when drying. This can shrink the filter.
- Any maintenance and cleaning of the outdoor unit should be performed by an authorized dealer or a licensed service provider.
- Any unit repairs should be performed by an authorized dealer or a licensed service provider.

Periods of Non-Use

If you plan not to use the unit for an extended period of time, perform the following:

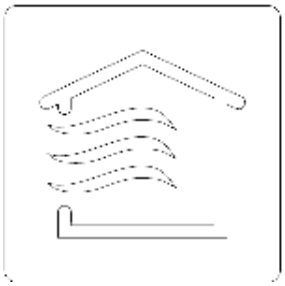

Turn on FAN function until the unit dries out completely.

Turn off the unit and disconnect the power.

Pre-Season Inspection

After long periods of non-use, or before periods of frequent use, do the following:

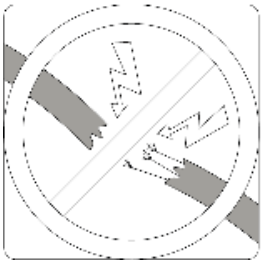

Check for damaged wires.

Check for leaks.

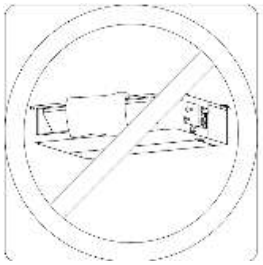

Make sure nothing is blocking all air inlets and outlets.

6.3 Troubleshooting

⚠ SAFETY PRECAUTIONS

If any of the following conditions occurs, turn off your unit immediately!

- The power cord is damaged or abnormally warm.
- You smell a burning odor.
- The unit emits loud or abnormal sounds.
- A power fuse blows or the circuit breaker frequently trips.
- Water or other objects fall into or out of the unit.

DO NOT ATTEMPT TO FIX THESE ISSUES YOURSELF. CONTACT AN AUTHORIZED SERVICE PROVIDER IMMEDIATELY.

The following problems are not malfunctions and in most situations will not require repairs.

Issue	Possible Causes
Unit does not turn on when pressing ON/OFF button.	The unit has a 3-minute protection feature that prevents the unit from overloading. The unit cannot be restarted within three minutes of being turned off.
	Cooling and Heating Models: If the operation light and PRE-DEF (Pre-heating/Defrost) indicators are lit up, the outdoor temperature is too cold and the unit's anti-cold wind feature is activated in order to defrost the unit.
	In Cooling-Only Models: If the "Fan Only" indicator is lit up, the outdoor temperature is too cold and the unit's anti-freeze protection is activated in order to defrost the unit.
The unit changes from COOL/HEAT to FAN mode.	The unit may change its setting to prevent frost from forming on the unit. Once the temperature increases, the unit will start operating in the previously selected mode again.
	The set temperature has been reached, at which point the unit turns off the compressor. The unit will continue operating when the temperature fluctuates again.
The indoor unit emits white mist.	When the unit restarts in HEAT mode after defrosting, white mist may be emitted due to moisture generated from the defrosting process.
Both the indoor and outdoor units emit white mist.	When the unit restarts in HEAT mode after defrosting, white mist may be emitted due to moisture generated from the defrosting process.
The indoor unit makes noises.	A rushing air sound may occur when the louver resets its position.
	A squeaking sound is heard when the system is OFF or in COOL mode. The noise is also heard when the drain pump (optional) is in operation.
	A squeaking sound may occur after running the unit in HEAT mode due to expansion and contraction of the unit's plastic parts.
Both the indoor unit and outdoor unit make noises.	Low hissing sound during operation: This is normal and is caused by refrigerant gas flowing through both indoor and outdoor units.
	Low hissing sound when the system starts, has just stopped running, or is defrosting: This noise is normal and is caused by the refrigerant gas stopping or changing direction.
	Squeaking sound: Normal expansion and contraction of plastic and metal parts caused by temperature changes during operation can cause squeaking noises.
The outdoor unit makes noises.	The unit will make different sounds based on its operating mode.
Dust is emitted from either the indoor or outdoor unit.	The unit may accumulate dust during extended periods of non-use, which will be emitted when the unit is turned on. This can be mitigated by covering the unit during long periods of inactivity.
The unit emits a bad odor.	The unit may absorb odors from the environment (such as furniture, cooking, cigarettes, etc.) which will be emitted during operations.
	The unit's filters have become moldy and should be cleaned.
The fan of the outdoor unit does not operate.	During operation, the fan speed is controlled to optimize product operation.

Problem	Possible Causes	Solution
Poor Cooling Performance	**Temperature setting may be higher than ambient room temperature.**	Lower the temperature setting.
	The heat exchanger on the indoor or outdoor unit is dirty.	Use the Clean function by remote control to clean the affected heat exchanger.
	The air filter is dirty.	Remove the filter and clean it according to instructions.
	The air inlet or outlet of either unit is blocked.	Turn the unit off, remove the obstruction and turn it back on.
	Doors and windows are open.	Make sure that all doors and windows are closed while operating the unit.
	Excessive heat is generated by sunlight.	Close windows and curtains during periods of high heat or bright sunshine.
	Too many sources of heat in the room (people, computers, electronics, etc.)	Reduce the amount of heat sources.
	Low refrigerant due to leak or long-term use.	Check for leaks, re-seal if necessary, and top off refrigerant.
	Silence function is activated (optional function)	Silence function can lower product performance by reducing operating frequency. Turn off Silence function.
The unit is not working	**Power failure**	Wait for the power to be restored.
	The power is turned off.	Turn on the power.
	The fuse is burned out.	Call a technician to replace the fuse.
	Remote control batteries are dead.	Replace batteries
	The unit's 3-minute protection has been activated.	Wait three minutes after restarting the unit.
	Timer is activated.	Turn timer off.
The unit starts and stops frequently.	**There's too much or too little refrigerant in the system.**	Call a technician to check for leaks and recharge the system with refrigerant.
	Incompressible gas or moisture has entered the system.	Call a technician to evacuate and recharge the system with refrigerant.
	The compressor is broken.	Call a technician to replace the compressor.
	The voltage is too high or too low.	Install a manostat to regulate the voltage.
Poor heating performance	**The outdoor temperature is extremely low.**	Use auxiliary heating device.
	Cold air is entering through doors and windows.	Make sure that all doors and windows are closed during use.
	Low refrigerant due to leak or long-term use.	Call technician to check for leaks, re-seal if necessary, and top off refrigerant.
Indicator lamps continue flashing	The unit may stop operation or continue to run safely. If the indicator lamps continue to flash or error codes appear, wait for about 10 minutes. The problem may resolve itself. If not, disconnect the power, then connect it again. Turn the unit on. If the problem persists, disconnect the power and contact MRCOOL®.	
Error code appears and begins with the following letters in the display area: *E(x), P(x), F(x), EH(xx), EL(xx), EC(xx), PH(xx), PL(xx), PC(xx)*		

Note: If the problem persists after performing the checks and diagnostics above, turn off the unit immediately and contact MRCOOL®.

Remote Troubleshooting:

Problem	Possible Causes	Solution
The fan speed cannot be changed	**Check whether AUTO mode has been selected.**	In AUTO mode, the fan speed is set automatically and cannot be changed.
	Check whether DRY mode has been selected.	In DRY mode, the fan speed button is disabled. The fan speed can only be changed in COOL, FAN, and HEAT mode.
The temperature display is off.	**Check whether FAN mode is selected.**	In FAN mode, the temperature cannot be adjusted.
The TIMER OFF disappears after a period of time.	**If the TIMER OFF function was activated, the operation may have finished.**	The unit will automatically stop at the set time and the indicator light will turn off.
The TIMER ON indicator disappears after a period of time.	**If the TIMER ON function was activated, the operation may have finished.**	The unit will automatically start at the set time and the indicator light will turn off.
There is no sound when the ON/OFF button is pressed.	**Check whether the signal transmitter of the remote control is properly directed towards the infrared signal receiver of the indoor unit.**	Point the remote control directly at the receiver and press the ON/OFF button twice.

Note: If the problem persists after performing the checks and diagnostics above, turn off the unit immediately and contact MRCOOL®.

6.4 Commission

The indoor ducted units can be programmed for different static pressures or real-time constant airflows. Use the following steps to set the static pressure or real-time constant airflow.

Setting Static Pressure Airflow:

The factory default setting is SP1; the external static pressure can be manually changed to the fan curves 1, 2, 3, 4, 5, 6, 7, 8,.

a. Press and hold the ON/OFF button and the FAN button for approximately 7 seconds.

b. Press the up or down arrow buttons to scroll through the menu and select "8".

c. Press and hold the ON/OFF button for approximately 2 seconds, and press the up or down arrow buttons to scroll through and select 1~8.

d. Press the OK button and the display will show "CS".

e. Press and hold the ON/OFF and FAN button for approximately 7 seconds, then exit the test mode.

Setting Real-Time Constant Airflow:

Use the Automatic Airflow "AF" Adjustment function to realize real-time constant airflows.

a. Press and hold the ON/OFF and FAN button for approximately 7 seconds.

b. Press the up or down arrow buttons to scroll through the menu and select "8".

c. Press and hold the ON/OFF button for approximately 2 seconds, and press the up or down arrow buttons to scroll through and select "AF".

d. Press the OK button and the display will show "CS".

e. Press and hold the ON/OFF and FAN button for approximately 7 seconds, then exit the test mode.

Note:
- Before commissioning, check the power connection of the machine.
- If there is no change after airflow adjustment, perform the setting again.
- Low static pressure for 9K-18K: SP options can only be 1~4.

6.5 Error Display (Indoor Unit)

When the indoor unit encounters a recognized error, an error code will be displayed; the error codes are described in the tables below:

Display	Error Information	Solution
FC	Forced cooling (not an error code)	--
EC07	ODU fan speed out of control	TS23
EC51	ODU EEPROM parameter error	TS19
EC52	ODU coil temp. sensor (T3) error	TS26
EC53	ODU ambient temp. sensor (T4) error	TS26
EC54	COMP. discharge temp. sensor (TP) error	TS26
EC56	IDU coil outlet temp. sensor (T2B) error (Multi-Zone)	TS26
ECC1	Other IDU refrigerant sensor detects leakage	TS40
EH00	IDU EEPROM malfunction	TS19
EH03	IDU fan speed out of control	TS23
EH0A	IDU EEPROM parameter error	TS19
EH0E	Water-level alarm malfunction	TS28
EH12	Main unit or secondary units malfunction	TS41
EH3A	External fan DC bus voltage is too low protection	TS38
EH3b	External fan DC bus voltage is too high fault	TS38
EH60	IDU room temp. sensor (T1) error	TS26
EH61	IDU evaporator coil temp. sensor (T2) error	TS26
EH6A	Communication error between the indoor unit and external fan module	TS38
EHC1	Refrigerant sensor detects leakage	TS40
EHC2	Refrigerant sensor is out of range and leakage is detected	TS40
EHC3	Refrigerant sensor is out of range	TS39
EL01	IDU & ODU communication error	TS20
EL0C	System lacks refrigerant	TS27
EL11	Communication malfunction between main unit and secondary units	TS41
FHCC	Refrigerant sensor error	TS39
PC00	ODU IPM Module Protection	TS29
PC01	ODU Voltage Protection	TS30
PC02	Compressor Top (or IPM) temp. protection	TS35
PC03	Pressure protection (low or high pressure) (for some models)	TS32
PC04	Inverter compressor drive error	TS31
PC OL	Low Ambient Temperature Protection	TS36
----	IDUs Mode Conflict (Multi-Zone)	--

For other errors:
The display board may show a garbled code or a code undefined by the service manual. Ensure that this code is not a temperature reading.

Troubleshooting:
Test the unit using the remote control. If the unit does not respond to the remote, the indoor PCB requires replacement. If the unit responds, the display board requires replacement.

6.6 Error Display (Outdoor Unit with Auxiliary Board)

Display	Error Information	Solution
dF	Defrost	Normal display, not error code
FC	Forced cooling	
EC 51	ODU EEPROM Parameter Error	TS12
EL 01	IDU & ODU Communication Error	TS13
PC 40	Communication Error between Outdoor Main Chip & Compressor-Driven Chip	TS26
PC 08	ODU Overcurrent Protection	TS19
PC 10	ODU Low AC Voltage Protection	TS23
PC 11	ODU Main Control Board DC Bus High Voltage Protection	TS23
PC 12	ODU Main Control Board DC Bus Low Voltage Protection/341 MCE Error	TS23
PC 00	IPM module protection	TS21
PC 0F	PFC Module Protection	TS27
EC 71	Over Current Failure of ODU DC Fan Motor	TS16
EC 72	Lack Phase Failure of ODU DC Fan Motor	TS23
EC 07	ODU Fan Speed Out of Control	TS16
PC 43	ODU Compressor Lack Phase Protection	TS39
PC 44	ODU Zero Speed Protection	TS19
PC 45	ODU IR Chip Drive Failure	TS40
PC 46	Compressor Speed Out of Control	TS19
PC 49	Compressor Overcurrent Failure	TS19
PC 30	System High Pressure Protection	TS34
PC 31	System Low Pressure Protection	TS36
PC 0A	High Temperatue Protection of Condenser	TS30
PC 06	Discharge Temperature Protection of Compressor	TS29
LC 06	High Temperature Protection of Inverter Module (IPM)	TS32
PC 02	Compressor Top (or IPM) Temperature Protection	TS32
EC 52	ODU Coil Temperature Sensor (T3) Error	TS18
EC 53	ODU Ambient Temperature Sensor (T4) Error	TS18
EC 54	Comp. Discharge Temperature Sensor (TP) Error	TS18
EC 50	ODU Temp. Sensor error (T3, T4, TP)	TS18
PC 0L	Low Ambient Temperature Protection	--
EC 55	ODU IPM module temperature sensor malfunction	TS42
EC 56	IDU coil outlet temp. sensor (T2B) error	TS18
EC 57	Refrigerant pipe temperature sensor error	TS18
EC 5A	Failure of enthalpy inlet temperature sensor	TS18
EC 5b	Failure of enthalpy outlet temperature sensor	TS18
EC 5E	Condenser temperature sensor (T3B) failure	TS18
EC 5C	Pressure sensor failure	TS43
EH C1	Refrigerant sensor detects leakage	TS41
PC 13	The AC power is cut off or the AC voltage detection circuit fails	TS44
PC A1	Condensation protection of refrigerant pipe	TS45

6.7 Quick Maintenance by Error Code

If you do not have the time to test which specific parts are faulty, you can change the required parts according to the error code. You can find the parts to replace by error code in the following table.

Part Requiring Replacement	Error Code									
	EH00/EH0A	EL01	EH03	EH60	EH61	EL0C	EHC1/EHC2	EH0E	EC53	EH06
Indoor PCB	√	√	√	√	√	√	X	√	X	√
Outdoor PCB	X	√	X	X	X	X	X	X	√	X
Indoor Fan Motor	X	X	√	X	X	X	X	X	X	X
T1 Sensor	X	X	X	√	X	X	X	X	X	X
T2 Sensor	X	X	X	X	√	√	X	√	X	X
T3 Sensor	X	X	X	X	X	X	X	X	X	X
T4 Sensor	X	X	X	X	X	X	X	X	√	X
Reactor	X	√	X	X	X	X	X	X	X	X
Compressor	X	X	X	X	X	X	X	X	X	X
Additional Refrigerant	X	X	X	X	X	√	√	√	X	X
Water-Level Switch	X	X	X	X	X	X	X	√	X	X
Water Pump	X	X	X	X	X	X	X	√	X	X
Display Board	X	X	X	X	X	X	X	X	X	√

	EC54	EC51	EC52	EC56	EC07	PC00	PC01	PC02	PC04	PC03	FHCC/EHC3
Indoor PCB	X	X	X	X	X	X	X	X	X	X	√
Outdoor PCB	√	√	√	√	√	√	√	√	√	√	X
Outdoor Fan Motor	X	X	X	X	√	√	X	√	√	X	X
T3 Sensor	X	X	√	X	X	X	X	X	X	X	X
TP Sensor	√	X	X	X	X	X	X	X	X	X	X
T2B Sensor	X	X	X	√	X	X	X	X	X	X	X
Refrigerant Sensor	X	X	X	X	X	X	X	X	X	X	√
Reactor Sensor	X	X	X	X	X	X	√	X	X	X	X
Compressor	X	X	X	X	X	√	X	X	X	X	X
IPM Module Board	X	X	X	X	X	√	√	√	√	X	X
Pressure Protector	X	X	X	X	X	X	X	X	X	√	X
Additional Refrigerant	X	X	X	X	X	X	X	X	X	√	X

This marking indicates that this product should not be disposed with other household wastes throughout North America. To prevent possible harm to the environment or human health from uncontrolled waste disposal, recycle it responsibly to promote the sustainable reuse of material resources. To return your used device, please use the return and collection systems or contact the retailer where the product was purchased. They can take this product for environmental safe recycling.

MRCOOL®

COMFORT MADE SIMPLE

Olympus Series Mid-Static Ducted Air Handler

The design and specifications of this product and/or manual are subject to change without prior notice.
Consult with the sales agency or manufacturer for details.