PENTAIR

STA-RITE®

WHISPERFLOXF® AND MAX-E-PROXF®

COMMERCIAL 3-PHASE PUMP

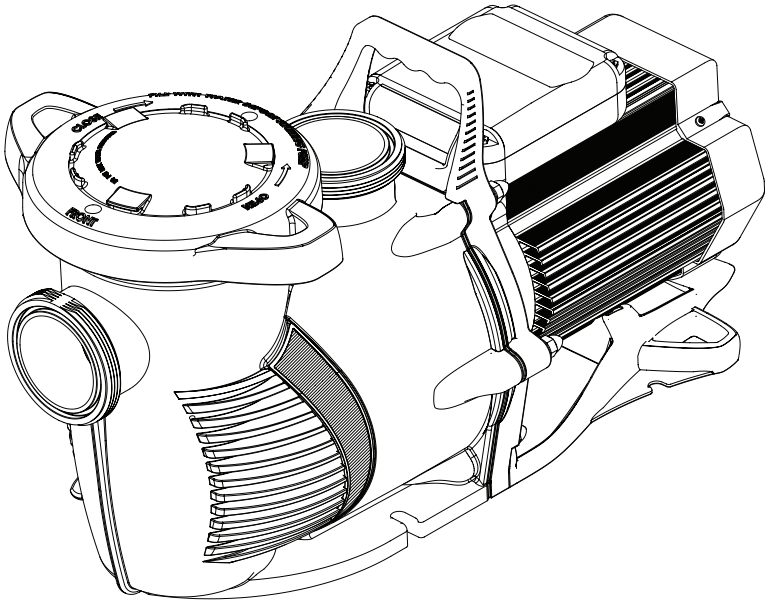

INSTALLATION AND USER'S GUIDE

IMPORTANT SAFETY INSTRUCTIONS

READ AND FOLLOW ALL INSTRUCTIONS

SAVE THESE INSTRUCTIONS

IMPORTANT PUMP WARNING AND SAFETY INSTRUCTIONS

IMPORTANT NOTICE

This guide provides installation and operation instructions for this pump. Consult Pentair with any questions regarding this equipment.

Attention Installer: This guide contains important information about the installation, operation and safe use of this product. This information should be given to the owner and/or operator of this equipment after installation or left on or near the pump.

Attention User: This manual contains important information that will help you in operating and maintaining this product. Please retain it for future reference.

READ AND FOLLOW ALL INSTRUCTIONS SAVE THESE INSTRUCTIONS

This is the safety alert symbol. When you see this symbol on your system or in this manual, look for one of the following signal words and be alert to the potential for personal injury.

DANGER Warns about hazards that can cause death, serious personal injury, or major property damage if ignored.

WARNING Warns about hazards that may cause death, serious personal injury, or major property damage if ignored.

CAUTION Warns about hazards that may or can cause minor personal injury or property damage if ignored.

NOTE Indicates special instructions not related to hazards.

Carefully read and follow all safety instructions in this manual and on equipment. Keep safety labels in good condition; replace if missing or damaged.

When installing and using this electrical equipment, basic safety precautions should always be followed, include the following:

DANGER FAILURE TO FOLLOW ALL INSTRUCTIONS AND WARNINGS CAN RESULT IN SERIOUS BODILY INJURY OR DEATH. **THIS PUMP SHOULD BE INSTALLED AND SERVICED ONLY BY A QUALIFIED POOL SERVICE PROFESSIONAL. INSTALLERS, POOL OPERATORS AND OWNERS MUST READ THESE WARNINGS AND ALL INSTRUCTIONS IN THE OWNER'S MANUAL BEFORE USING THIS PUMP. THESE WARNINGS AND THE OWNER'S MANUAL MUST BE LEFT WITH THE POOL OWNER.**

WARNING Do not permit children to use this product.

WARNING **RISK OF ELECTRICAL SHOCK** (For all permanently installed units intended for use on 15 or 20 ampere, 125 through 240 volt, single phase branch circuits). Connect only to a branch circuit protected by a ground-fault circuit-interrupter (GFCI). Contact a qualified electrician if you cannot verify that the circuit is protected by a GFCI. This unit must be connected only to a supply circuit that is protected by a ground-fault circuit-interrupter (GFCI). Such a GFCI should be provided by the installer and should be tested on a routine basis. To test the GFCI, push the test button. The GFCI should interrupt power. Push the reset button. Power should be restored. If the GFCI fails to operate in this manner, the GFCI is defective. If the GFCI interrupts power to the pump without the test button being pushed, a ground current is flowing, indicating the possibility of an electric shock. Do not use this pump. Disconnect the pump and have the problem corrected by a qualified service representative before using.

CAUTION This pump is for use with permanent swimming pools and may also be used with hot tubs and spas if so marked. Do not use with storable pools. A permanently-installed pool is constructed in or on the ground or in a building such that it cannot be readily disassembled for storage. A storable pool is constructed so that it is capable of being readily disassembled for storage and reassembled to its original integrity.

General Warnings

- Never open the inside of the drive motor enclosure. There is a capacitor bank that holds a 230 VAC charge even when there is no power to the unit.
- The pump is not submersible.
- The pump is capable of high flow rates; use caution when installing and programming to limit pumps performance potential with old or questionable equipment.
- Code requirements for electrical connection differ from country to country, state to state, as well as local municipalities. Install equipment in accordance with the National Electrical Code and all applicable local codes and ordinances.
- Before servicing the pump; switch OFF power to the pump by disconnecting the main circuit to the pump.
- This appliance is not intended for use by persons (including children) of reduced physical, sensory or mental capabilities, or lack of experience and knowledge, unless they have been given supervision or instruction concerning the use of the appliance by a person responsible for their safety.

DANGER SUCTION ENTRAPMENT HAZARD: STAY OFF THE MAIN DRAIN AND AWAY FROM ALL SUCTION OUTLETS! **THIS PUMP IS NOT EQUIPPED WITH SAFETY VACUUM RELEASE SYSTEM (SVRS) PROTECTION AND DOES NOT PROTECT AGAINST BODY OR LIMB ENTRAPMENTS, DISEMBOWELMENTS (WHEN A PERSON SITS ON A BROKEN OR UNCOVERED POOL DRAIN) OR HAIR ENTANGLEMENTS.**

THIS PUMP PRODUCES HIGH LEVELS OF SUCTION AND CREATES A STRONG VACUUM AT THE MAIN DRAIN AT THE BOTTOM OF THE BODY OF WATER. THIS SUCTION IS SO STRONG THAT IT CAN TRAP ADULTS OR CHILDREN UNDER WATER IF THEY COME IN CLOSE PROXIMITY TO A DRAIN OR A LOOSE OR BROKEN DRAIN COVER OR GRATE.

THE USE OF UNAPPROVED COVERS OR ALLOWING USE OF THE POOL OR SPA WHEN COVERS ARE MISSING, CRACKED OR BROKEN CAN RESULT IN BODY OR LIMB ENTRAPMENT, HAIR ENTANGLEMENT, BODY ENTRAPMENT, EVISCERATION AND/OR DEATH.

The suction at a drain or outlet can cause:

Limb Entrapment: When a limb is sucked or inserted into an opening resulting in a mechanical bind or swelling. This hazard is present when a drain cover is missing, broken, loose, cracked or not properly secured.

Hair Entanglement: When the hair tangles or knots in the drain cover, trapping the swimmer underwater. This hazard is present when the flow rating of the cover is too small for the pump or pumps.

Body Entrapment: When a portion of the body is held against the drain cover trapping the swimmer underwater. This hazard is present when the drain cover is missing, broken or the cover flow rating is not high enough for the pump or pumps.

Evisceration/Disembowelment: When a person sits on an open pool (particularly a child wading pool) or spa outlet and suction is applied directly to the intestines, causing severe intestinal damage. This hazard is present when the drain cover is missing, loose, cracked, or not properly secured.

Mechanical Entrapment: When jewelry, swimsuit, hair decorations, finger, toe or knuckle is caught in an opening of an outlet or drain cover. This hazard is present when the drain cover is missing, broken, loose, cracked, or not properly secured.

NOTE: ALL SUCTION PLUMBING MUST BE INSTALLED IN ACCORDANCE WITH THE LATEST NATIONAL AND LOCAL CODES, STANDARDS AND GUIDELINES.

IMPORTANT PUMP WARNING AND SAFETY INSTRUCTIONS

⚠WARNING **TO MINIMIZE THE RISK OF INJURY DUE TO SUCTION ENTRAPMENT HAZARD:**

- A properly installed and secured ANSI/ASME A112.19.8 approved anti-entrapment suction cover must be used for each drain.
- Each suction cover must be installed at least three (3') feet apart, as measured from the nearest point to nearest point.
- Regularly inspect all covers for cracks, damage and advanced weathering.
- If a cover becomes loose, cracked, damaged, broken or is missing, replace with an appropriate certified cover.
- Replace drain covers as necessary. Drain covers deteriorate over time due to exposure to sunlight and weather.
- Avoid getting hair, limbs or body in close proximity to any suction cover, pool drain or outlet.
- Disable suction outlets or reconfigure into return inlets.

⚠WARNING The pump can produce high levels of suction within the suction side of the plumbing system. These high levels of suction can pose a risk if a person comes within the close proximity of the suction openings. A person can be seriously injured by this high level of vacuum or may become trapped and drown. It is absolutely critical that the suction plumbing be installed in accordance with the latest national and local codes for swimming pools.

⚠WARNING A clearly labeled emergency shut-off switch for the pump must be in an easily accessible, obvious place. Make sure users know where it is and how to use it in case of emergency.

The Virginia Graeme Baker (VGB) Pool and Spa Safety Act creates new requirements for owners and operators of commercial swimming pools and spas.

Commercial pools or spas constructed on or after December 19, 2008, shall utilize:

(A) A multiple main drain system without isolation capability with suction outlet covers that meet ASME/ANSI A112.19.8a Suction Fittings for Use in Swimming Pools, Wading Pools, Spas, and Hot Tubs and either:

(i) A safety vacuum release system (SVRS) meeting ASME/ANSI A112.19.17 Manufactured Safety Vacuum Release systems (SVRS) for Residential and Commercial Swimming Pool, Spa, Hot Tub, and Wading Pool Suction Systems and/or ASTM F2387 Standard Specification for Manufactured Safety Vacuum Release Systems (SVRS) for Swimming pools, Spas and Hot Tubs or

(ii) A properly designed and tested suction-limiting vent system or

(iii) An automatic pump shut-off system.

Commercial pools and spas constructed prior to December 19, 2008, with a single submerged suction outlet shall use a suction outlet cover that meets ASME/ANSI A112.19.8a and either:

(A) A SVRS meeting ASME/ANSI A112.19.17 and/or ASTM F2387, or

(B) A properly designed and tested suction-limiting vent system, or

(C) An automatic pump shut-off system, or

(D) Disabled submerged outlets, or

(E) Suction outlets shall be reconfigured into return inlets.

⚠CAUTION **For Installation of Electrical Controls at Equipment Pad (ON/OFF Switches, Timers and Automation Load Center)**

Install all electrical controls at equipment pad, such as on/off switches, timers, and control systems, etc. to allow the operation (startup, shut-down, or servicing) of any pump or filter so the user does not place any portion of his/her body over or near the pump strainer lid, filter lid or valve closures. This installation should allow the user enough space to stand clear of the filter and pump during system start-up, shut down or servicing of the system filter.

⚠DANGER **HAZARDOUS PRESSURE: STAND CLEAR OF PUMP AND FILTER DURING START UP.**

Circulation systems operate under high pressure. When any part of the circulating system (i.e. locking ring, pump, filter, valves, etc.) is serviced, air can enter the system and become pressurized. Pressurized air can cause the pump housing cover, filter lid, and valves to violently separate which can result in severe personal injury or death. Filter tank lid and strainer cover must be properly secured to prevent violent separation. Stand clear of all circulation system equipment when turning on or starting up pump.

Before servicing equipment, make note of the filter pressure. Be sure that all controls are set to ensure the system cannot inadvertently start during service. Turn off all power to the pump. **IMPORTANT: Place filter manual air relief valve in the open position and wait for all pressure in the system to be relieved.**

Before starting the system, fully open the manual air relief valve and place all system valves in the "open" position to allow water to flow freely from the tank and back to the tank. Stand clear of all equipment and start the pump.

IMPORTANT: Do not close filter manual air relief valve until all pressure has been discharged from the valve and a steady stream of water appears. Observe filter pressure gauge and be sure it is not higher than the pre-service condition.

General Installation Information

- All work must be performed by a qualified service professional, and must conform to all national, state, and local codes.
- Install to provide drainage of compartment for electrical components.
- These instructions contain information for a variety of pump models and therefore some instructions may not apply to a specific model. All models are intended for use in swimming pool applications. The pump will function correctly only if it is properly sized to the specific application and properly installed.

⚠WARNING Pumps improperly sized or installed or used in applications other than for which the pump was intended can result in severe personal injury or death. These risks may include but not be limited to electric shock, fire, flooding, suction entrapment or severe injury or property damage caused by a structural failure of the pump or other system component.

Pumps and replacement motors that are single speed and one (1) Total HP or greater cannot be sold, offered for sale, or installed in a residential pool for filtration use in California, Title 20 CCR sections 1601-1609.

Warning Page P/N 352558 Rev. B 11/19

CUSTOMER SERVICE / TECHNICAL SUPPORT

If you have questions about ordering Pentair replacement parts, and pool products, please contact:

Customer Service and Technical Support, USA
(8 A.M. to 4:30 P.M. — Eastern/Pacific Times)
Phone: (800) 831-7133
Fax: (800) 284-4151

Web site
Visit *www.pentair.com* for more information about Pentair products.

Sanford, North Carolina (8 A.M. to 4:30 P.M. ET)
Phone: (919) 566-8000
Fax: (919) 566-8920

Moorpark, California (8 A.M. to 4:30 P.M. PT)
Phone: (805) 553-5000 (Ext. 5591)
Fax: (805) 553-5515

TABLE OF CONTENTS

Important Pump Warning and Safety Instructions ..... **i**

Pump Overview **1**
- Pump Overview and Features 1
- Union Adapter Installation 1

Installation **2**
- Location 2
- Piping 2
- Fittings and Valves 2
- Electrical Requirements 2
- Electrical Installation 3

Operation **4**
- Priming the Pump 4

Maintenance **5**
- Pump Strainer Basket 5
- Cleaning the Pump Strainer Basket 5
- Winterizing 5
- Motor Care 6
- Pump Disassembly 6
- Pump Reassembly 7
- The Mechanical Seal 7

Troubleshooting **8**

Replacement Parts **9**
- Illustrated Parts List 9
- Motor Table 10
- Hydraulic Parts Table 10
- Pump Dimensions 10
- Pump Performance Curves 11

PUMP OVERVIEW

The WhisperFloXF® and Max-E-ProXF® Commercial 3-Phase Pumps feature a heavy duty 56 square flange motor and highly engineered hydraulics. With capabilities in excess of 200 gpm, these pumps are an ideal choice for many residential and commercial applications; especially those involving water features, negative edges and slides.

- New hydraulic isolator separates priming water from pumping water for faster priming, more turbulence-free flow and increased efficiency.
- Upgraded dual-compartment motor for simplified field wiring.
- Self-priming for quick, easy start-up.
- New union connectors included for connecting directly to 2.5” or 3” plumbing.
- Diamond seals for increase durability and performance.
- Integral volute and strainer pot reduce hydraulic noise.
- External port threading and tool-free union nuts need only hand-tightening.

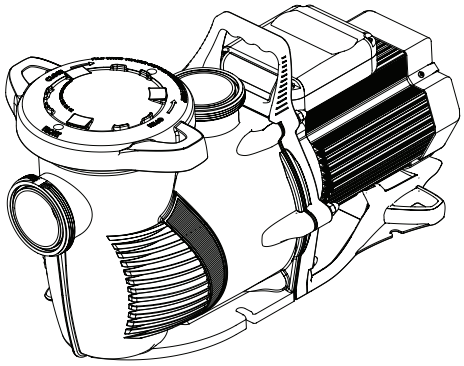

WhisperFloXF 3-Phase Pump (Almond)
Max-E-ProXF 3-Phase Pump (Black)

Drop-in replacement for all WhisperFlo® models. Simple replacement for Challenger® pumps (Riser base required for Challenger replacements P/N 400012 available separately)

Union Adapter Installation

Installing the locking union onto the pump:

1. Glue the PVC union adapter fitting to the PVC pipe. The adapter accepts 2.5” PVC pipe internally or a 3” PVC coupling externally.

   Note: Be sure that the groove for the retainer ring is on the end opposite your glue joint.
2. Slip the nut onto the fitting.
3. Place the flat side of the retainer ring against the adapter on the grooved end.
4. Gently flex the locking clip union nut retainer ring into its place in the groove on the adapter.
5. Start snapping it in at one end of the ring and work your way around.

   The tab features should point out away from the nut and the glue joint towards the sealing surface.
6. Slide the nut over the ring and attach it to the pump.

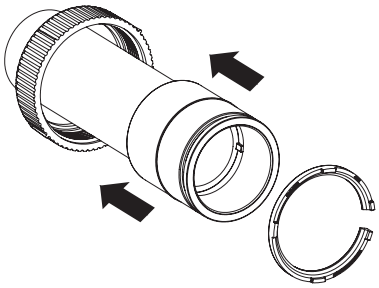

Slip the nut onto the fitting.

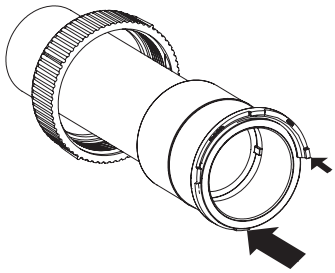

Snap retainer ring around the adapter.

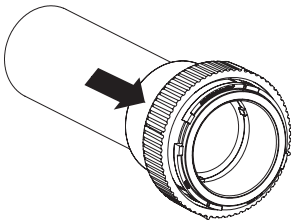

Slide the nut over the adapter

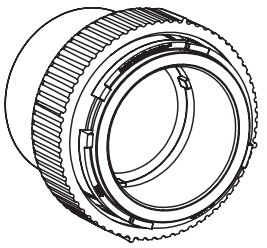

Only install the retainer ring with the tab features pointing away from the nut.

Union Nut and Adapter

INSTALLATION

Only a qualified plumbing professional should install the WhisperFloXF® or Max-E-ProXF® Commercial 3-Phase Pump. Refer to *"Important Pump Warning And Safety Instructions"* on pages i - ii for additional installation and safety information.

Location

Note: Do not install this pump within an outer enclosure or beneath the skirt of a hot tub or spa unless marked accordingly.

Note: Ensure that the pump is mechanically secured to the equipment pad.

Be sure the pump location meets the following requirements:

1. Install the pump as close to the pool or spa as possible. To reduce friction loss and improve efficiency, use short, direct suction and return piping.
2. Install a minimum of 5 feet (1.5 meters) from the inside wall of the pool and spa. Canadian installations require a minimum of 9.8 feet (3 meters) from the inside wall of the pool.
3. Install the pump a minimum of 3 feet (0.9 meters) from the heater outlet.
4. Do not install the pump more than 10 feet (3.1 meters) above the water level.
5. Install the pump in a well ventilated location protected from excess moisture (i.e. rain gutter downspouts, sprinklers, etc.).
6. Install the pump with a rear clearance of at least 3 inches (7.6 cm) so that the motor can be removed easily for maintenance and repair.

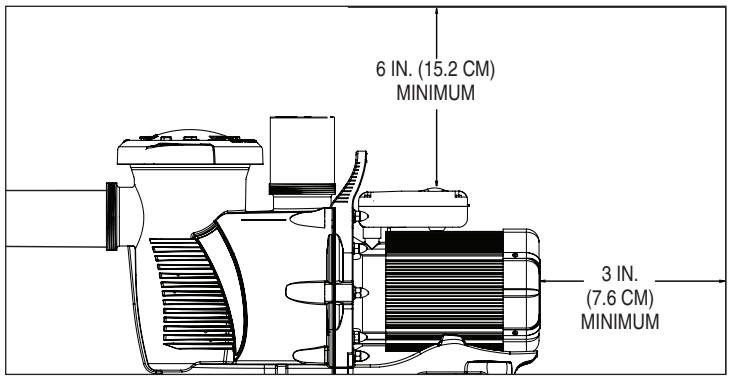

Pump Rear and Vertical Clearance

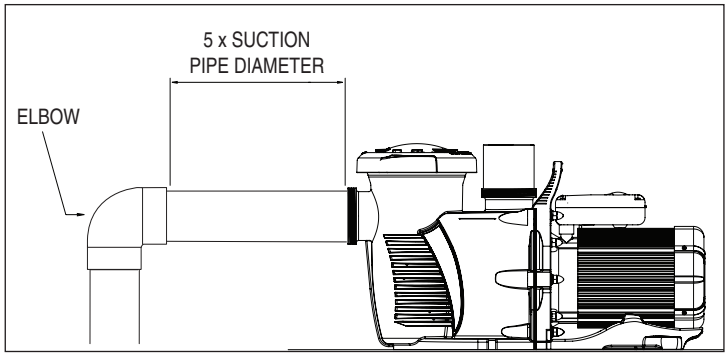

Recommended Piping

Piping

1. For improved pool plumbing, it is recommended to use a larger pipe size.
2. Piping on the suction side of the pump should be the same or larger than the return line diameter.
3. Plumbing on the suction side of the pump should be as short as possible.
4. For most installations Pentair recommends installing a valve on both the pump suction and return lines so that the pump can be isolated during routine maintenance. However, we also recommend that a valve, elbow or tee installed in the suction line should be no closer to the front of the pump than five (5) times the suction line diameter.

   Example: A 2.5 inch pipe requires a 12.5 inch (31.8 cm) straight run in front of the suction inlet of the pump. This will help the pump prime faster and last longer.

   Note: DO NOT install 90° elbows directly into the pump inlet or outlet.

Fittings and Valves

1. Do not install 90° elbows directly into pump inlet.
2. Flooded suction systems should have gate valves installed on suction and discharge pipes for maintenance, however, the suction gate valve should be no closer than five times the suction pipe diameter as described in this section.
3. Use a check valve in the discharge line when using this pump for any application where there is significant height to the plumbing after the pump.
4. Be sure to install check valves when plumbing in parallel with another pump. This helps prevent reverse rotation of the impeller and motor.

Electrical Requirements

- Install all equipment in accordance with the National Electrical code and all applicable local codes and ordinances.
- A means for disconnection must be incorporated in the fixed wiring in accordance with the wiring rules.

Electrical Installation

⚠WARNING **RISK OF ELECTRICAL SHOCK OR ELECTROCUTION.** This pump must be installed by a licensed or certified electrician or a qualified service professional in accordance with the National Electrical Code (NEC) and all other applicable national or local codes and ordinances. Improper installation will create an electrical hazard which could result in death or serious injury to users, installers, or others due to electrical shock, and may also cause damage to property.

Always disconnect power to the pump at the circuit breaker before servicing the pump. Failure to do so could result in death or serious injury to service people, users or others due to electric shock.

Read all servicing instructions before working on the pump.

Wiring

1. Be sure all electrical breakers, switches and automatic controls are turned off before wiring motor.

   ⚠WARNING **STORED CHARGE** - Wait at least sixty (60) seconds before servicing.

2. Become familiar with the wiring diagram, volts, hertz, amps and phase of your particular pump motor. All of this information is provided on the motor nameplate label found on the side of the motor.
3. Be sure that the supply voltage meets the requirements listed on the motor nameplate. If these requirements are not met, permanent motor damage may occur.
4. For wiring sizes and general guidelines for proper electrical installation, please follow the specifications defined in the National Electrical Code and all other applicable national or local codes.
5. 3-Phase motors require external overload protection. An initial inspection is needed to ensure proper rotation of the pump.

   Once installed, momentarily cycle the power on and then off. Note the rotation of the motor fan or shaft as it comes to a stop. If wired correctly the motor shaft and/or fan will match the rotation arrow noted on the pump.
6. Use a strain relief and be sure all electrical connections are clean and tight.
7. Cut the wires to the appropriate length so they do not overlap or touch when connected.

Grounding

1. Permanently ground the motor using the green ground screw, as shown below. Use the correct wire size and type specified by National Electrical Code. Be sure the ground wire is connected to an electrical service ground.
2. The pump should be permanently connected to either a circuit breaker, 2-pole timer or 2-pole relay.

   Note: If AC power is supplied by a GFCI circuit breaker, the pump should be wired on its own independent circuit **unless the pump is operated in tandem with a Pentair salt chlorine generator.**

Bonding

1. Bond the motor to the structure in accordance with the National Electrical Code and all other applicable national or local codes. Use a solid copper bonding conductor not smaller than 8 AWG. For Canadian installations, a 6 AWG or larger solid copper bonding conductor is required. Run a wire from the external bonding screw or lug to the bonding structure.
2. Connect the wire from the accessible bonding lug on the motor to all metal parts of the swimming pool, spa, or hot tub structure and to all electrical equipment, metal conduit, and metal piping within 5 feet (1.5 meters) of the inside walls of the swimming pool, spa, or hot tub. Run a wire from the external bonding screw or lug to the bonding structure.

   ⚠WARNING Before establishing or restoring power to the pump, be sure all electrical connections are tight and all electrical and wiring compartment covers are properly installed.

Note: When the pump is started and stopped by removing power with a relay or timer, a two-pole device should be used to apply and remove power to both POWER LINE TERMINALS.

Pentair offers GFCI breakers which offer appropriate personal protection while meeting 2008 to current NEC Standards for Pool Pumps. See Pentair product catalog for details.

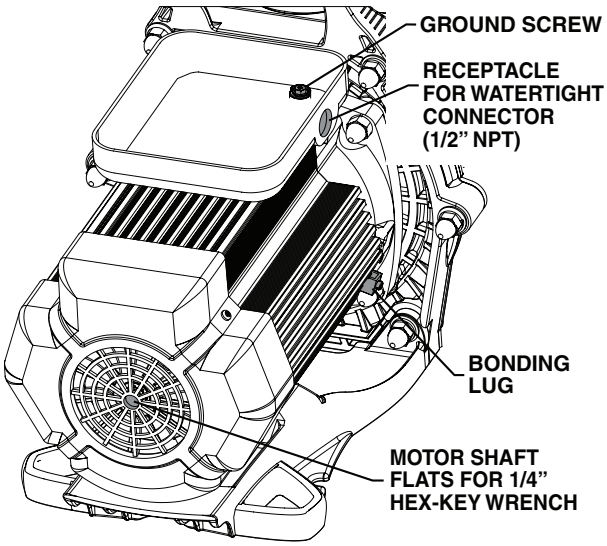

OPERATION

⚠CAUTION **DO NOT run the pump dry.** If the pump is run dry, the mechanical seal will be damaged and the pump will start leaking. If this occurs, the damaged seal must be replaced. ALWAYS maintain proper water level in your pool (half way up skimmer opening). If the water level falls below the skimmer opening, the pump will draw air through the skimmer, losing the prime and causing the pump to run dry, resulting in a damaged seal. Continued operation in this manner could cause a loss of pressure, resulting in damage to the pump case, impeller and seal and may cause property damage and personal injury.

Before turning the pump ON, be sure the following conditions are met:

1. Open filter air relief valve.
2. Open valves.
3. Pool return is completely open and clear of any blockages.
4. Water in the pump basket.
5. Stand clear of the filter or other pressurized vessels.

Priming the Pump

If the pump is installed below the water level of the pool, close return and suction lines prior to opening the pump strainer pot. Be sure to reopen valves prior to operating.

Note: Running the pump dry could cause a loss of pressure, resulting in damage to the pump case, impeller and seal.

Follow the steps below to prime the pump:

1. Ensure all electrical power to the pump is shut off at the circuit breaker and all pressure has been relieved from the filtration system.
2. Remove the pump strainer pot lid.
3. Fill the pump strainer pot with water.
4. Reinstall the lid by placing it onto the strainer pot and tightening clockwise until the lid handles are horizontal.
5. Open the filter air relief valve and stand clear of the filter.
6. Reestablish electrical power to the pump at the circuit breaker and start the pump.
7. When a steady stream of water flows from the filter air relief valve, close the valve. The system should now be free of air and recirculating water.
8. This pump will prime within 20 minutes. Do not allow your pump to run longer than this time without developing full flow. If the pump does not prime, refer to *Troubleshooting* on page 8.
9. Two speed pumps should run on high speed for priming.

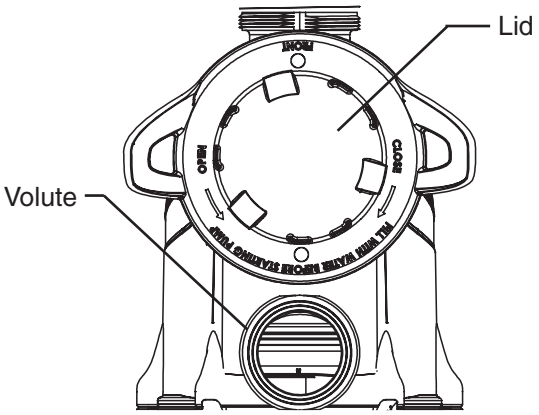

Top View

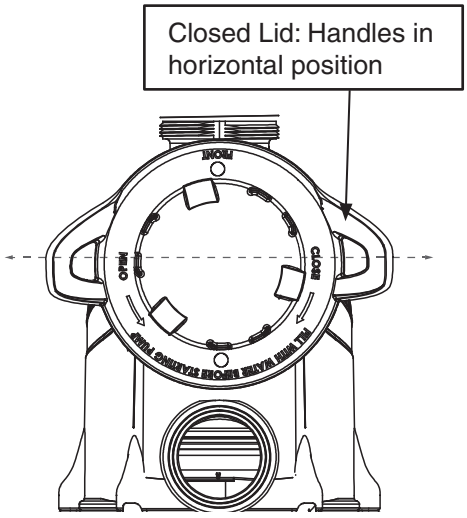

MAINTENANCE

⚠WARNING **DO NOT** open the strainer pot if pump fails to prime or if pump has been operating without water in the strainer pot. Pumps operated in these circumstances may experience a build up of vapor pressure and may contain scalding hot water. Opening the pump may cause serious personal injury. In order to avoid the possibility of personal injury, make sure the suction and discharge valves are open and strainer pot temperature is cool to touch, then open with extreme caution.

⚠CAUTION To prevent damage to the pump and for proper operation of the system, clean pump strainer basket and skimmer baskets regularly.

Pump Strainer Basket

The strainer pot is located at the front of the pump and houses the pump strainer basket.

The strainer basket can be viewed through the strainer pot lid and should be visually inspected at least once a week. Regularly emptying and cleaning the strainer basket will lead to higher filter and heater efficiency and prevent unnecessary stress on the pump motor.

Cleaning the Pump Strainer Basket

1. Shut off all electrical power to the pump at the circuit breaker.
2. Open the filter air relief valve and relieve all pressure from the filtration system.
3. Turn the strainer pot lid counter-clockwise and remove from the pump.
4. Remove debris and rinse out the strainer basket. Replace the basket if it is cracked or damaged.
5. Place the basket back into the strainer pot. Be sure to align the notch in the bottom of the basket with the rib in the bottom of the strainer pot.
6. Fill the strainer pot with water up to the inlet port.
7. Clean the lid O-ring and sealing surface of the strainer pot.

   Note: It is important to keep the lid O-ring clean and well lubricated.
8. Reinstall the lid by placing it onto the strainer pot and tightening clockwise until the lid handles are horizontal.

   Note: Ensure the lid O-ring is properly placed and is not being pinched between the lid and strainer pot.
9. Open the filter air relief valve and stand clear of the filter.
10. Reestablish electrical power to the pump at the circuit breaker and start the pump.
11. When a steady stream of water flows from the filter air relief valve, close the valve.

⚠WARNING **THIS SYSTEM OPERATES UNDER HIGH PRESSURE**. When any part of the circulating system is serviced, air can enter the system and become pressurized. Pressurized air can cause the lid to separate from the pump which can result in serious injury, death, or property damage. To avoid this potential hazard, follow above instructions.

Winterizing

- In mild climate areas, when temporary freezing conditions may occur, run your filtering equipment all night to prevent freezing.
- You are responsible for determining when freezing conditions may occur. If freezing conditions are expected, take the following steps to reduce the risk of freeze damage. **Freeze damage is not covered under warranty.**

To prevent freeze damage follow the procedures listed below:

1. Shut off all electrical power for the pump at the circuit breaker.
2. Drain water out of the pump by removing the two drain plugs from the bottom of the strainer pot. Store the plugs in the strainer basket.
3. Cover the motor to protect it from severe rain, snow and ice.

Note: Do not wrap motor with plastic or other air tight materials during winter storage. The motor may be covered during a storm, winter storage, etc., but never when operating or expecting operation.

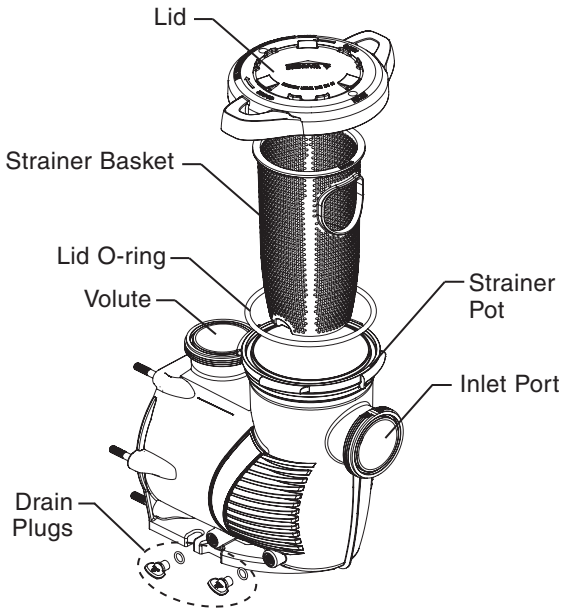

Strainer Pot Assembly

⚠WARNING Always disconnect power to the pump at the circuit breaker and disconnect the communication cable before servicing the pump. Failure to do so could result in death or serious injury to service people, users or others due to electric shock. Read all servicing instructions before working on the pump.

⚠WARNING **DO NOT** open the strainer pot if pump fails to prime or if pump has been operating without water in the strainer pot. Pumps operated in these circumstances may experience a build up of vapor pressure and may contain scalding hot water. Opening the pump may cause serious personal injury. In order to avoid the possibility of personal injury, make sure the suction and discharge valves are open and strainer pot temperature is cool to touch, then open with extreme caution.

⚠CAUTION Be sure not to scratch or mar the polished shaft seal faces; seal will leak if faces are damaged. The polished and lapped faces of the seal could be damaged if not handled with care.

Motor Care

Protect from heat

1. Shade the motor from the sun.
2. Any enclosure must be well ventilated to prevent overheating.
3. Provide ample cross ventilation.

Protect against dirt

1. Protect from foreign matter.
2. Do not store (or spill) chemicals on or near the motor.
3. Avoid sweeping or stirring up dust near the motor while it is operating.
4. If a motor has been damaged by dirt it voids the motor warranty.
5. Clean the lid O-ring and sealing surface of the strainer pot.

Protect against moisture

1. Protect from splashing or sprayed water.
2. Protect from extreme weather.
3. If the motor has become wet - let it dry before operating. Do not allow the pump to operate if it has been flooded.
4. If the motor has been damaged by water it voids the motor warranty.

Pump Disassembly

Tools required:

- 3/8-inch socket wrench
- 9/16-inch open-end wrench
- 9/64-inch hex key wrench
- 1/4-inch hex key wrench
- Torque wrench

To disassemble the pump:

1. Ensure all electrical power to the pump is shut off at the circuit breaker and all pressure has been relieved from the filtration system.
2. Drain the pump by removing both drain plugs from the bottom of the strainer pot.
3. Using a 9/16-inch open-end wrench remove the six (6) nuts and washers securing the strainer pot to the motor assembly.
4. Gently pull the two pump halves apart.
5. Using a 9/64-inch hex key wrench, remove the three (3) screws securing the diffuser to the seal plate.
6. Hold the impeller in place by hand. Using a 3/8-inch socket wrench, remove the impeller screw and washer. The screw is a left-handed thread and loosens in a clockwise direction.

   Note: If the impeller screw has a plastic head a 3/4-inch socket is required. This screw will also include an O-ring instead of a washer.

   ⚠CAUTION The impeller may have sharp edges that could potentially cut or scratch hands. Safety gloves are recommended when holding the impeller during disassembly and reassembly.

7. Using a 1/4-inch hex key wrench, hold the motor shaft in place at the back of the motor. Turn the impeller counter-clockwise and remove it from the shaft.
8. Using a 9/16-inch wrench, remove the four (4) motor nuts and washers securing the seal plate to the motor.
9. Place the seal plate face down on a flat surface and press out the ceramic part of the mechanical seal.
10. Clean the seal plate, seal housing and motor shaft.

- ILLUSTRATED PARTS VIEW ON THE NEXT PAGE -

Pump Reassembly

1. Install the **spring end** of the mechanical seal onto the impeller shaft. Ensure **black/carbon** face is facing outward.
2. Secure the seal plate onto the motor using the four (4) motor nuts and washers.
3. With the **white ceramic** face facing outward, press the seal into the seal plate with your thumbs. Wipe off the ceramic with a clean cloth. Do not lubricate seal faces.
4. Using a 1/4-inch hex key wrench, hold the motor shaft in place at the back of the motor. Firmly tighten the impeller clockwise onto the motor shaft to 40 in-lbs.

> **⚠CAUTION** The impeller may have sharp edges that could potentially cut or scratch hands. Safety gloves are recommended when holding the impeller during disassembly and reassembly.

5. Ensure the impeller washer is in place on the impeller screw and firmly tighten the screw counter-clockwise to 78.5 in-lbs.

   Note: Some impeller screws include an O-ring instead of a washer. Before reassembling, inspect the O-ring for damage and replace if necessary.
6. Secure the diffuser onto the seal plate using the three (3) diffuser screws. Ensure the plastic pins and holding screw inserts are aligned. As a reference, “TOP” is molded onto the top side of the diffuser.

   Note: Ensure that the seal plate O-ring is clean and free of debris. Inspect the O-ring for damage and replace if necessary.
7. Secure the motor assembly to the strainer pot with the six (6) seal plate nuts and washers. Each seal plate nut should be torqued to a maximum of 100 in-lbs. Do not overtighten the nuts.
8. Reinstall both drain plugs into the bottom of the strainer pot.
9. Refer to page 4, *Priming the Pump* for instructions on restarting the pump.

The Mechanical Seal

The mechanical seal consists of two parts, a spring half and a ceramic/rubber half. The pump requires little or no service other than reasonable care. However, a mechanical seal may occasionally become damaged and must be replaced. Refer to *Pump Disassembly* and *Pump Reassembly* for replacement instructions.

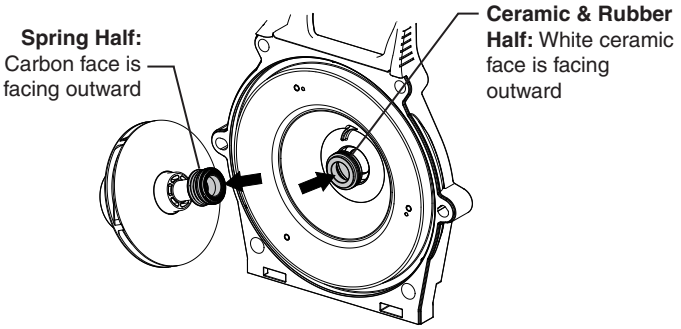

Mechanical Seal

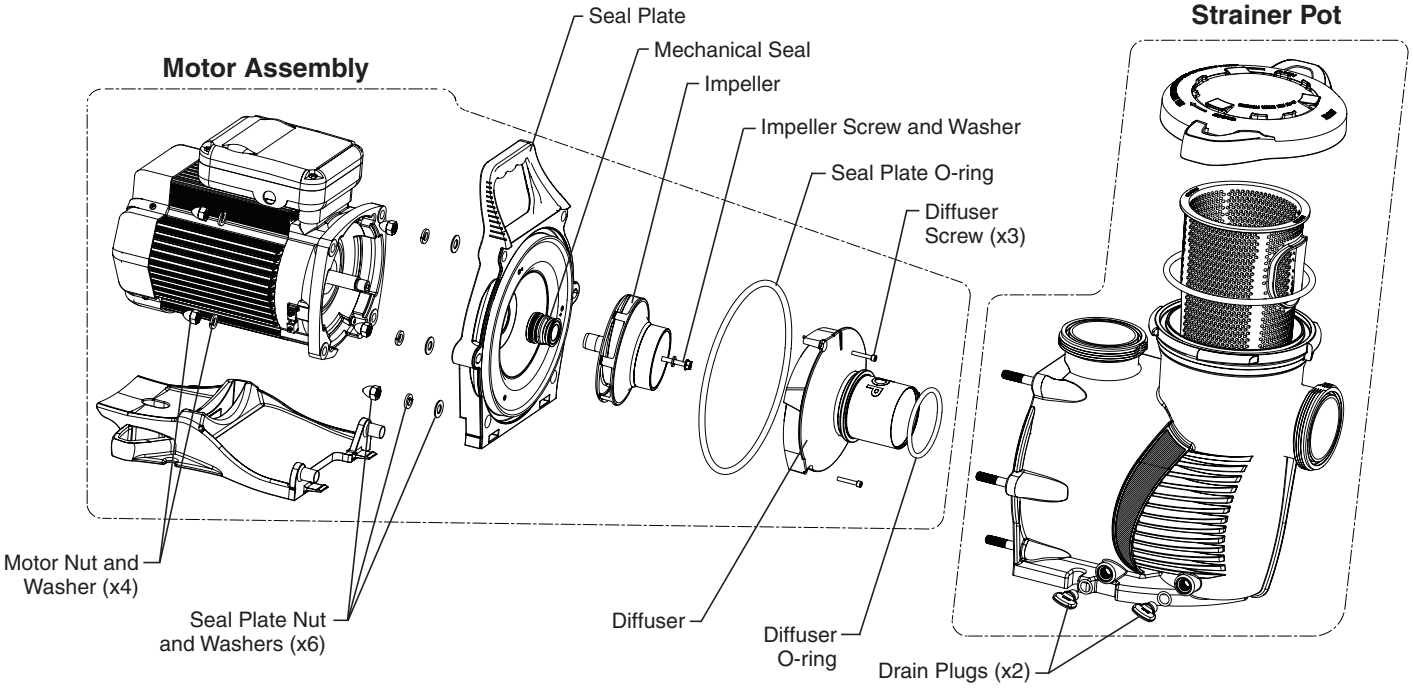

Illustrated Parts View

TROUBLESHOOTING

⚠ WARNING

RISK OF ELECTRICAL SHOCK OR ELECTROCUTION.
Improperly installation will create an electrical hazard which could result in death or serious injury to pool users, installers, or others due to electrical shock, and may also cause damage to property.

1. If you are not familiar with your pool filtering system and/or heater:
   a. **Do NOT** attempt to adjust or service without consulting your dealer, or a qualified pool technician.
   b. Read the entire Installation & User's Guide before attempting to use, service or adjust the pool filtering system or heater.
2. **Switch OFF power to the pump before attempting to service or repair.**

Problem	Corrective Action
Pump will not prime	Check suction piping and any suction gate valves. Ensure lid O-ring is in place and in good condition. Ensure the strainer pot lid is properly secured to the strainer pot. Check water level and ensure skimmer is not drawing air or clogger Ensure suction lines, pump strainer pot and pump volute are full of water. Ensure any valves in the suction line are working and open. Check water level to ensure skimmer is not drawing air or clogged.
Pump O-ring defective	Replace O-ring.
Reduced capacity and/or head Air pockets or leaks in suction line Pump will not prime — too much air	Check suction piping and any suction gate valves. Ensure lid O-ring is in place and in good condition. Ensure the strainer pot lid is properly secured to the strainer pot. Check water level to ensure skimmer is not drawing air or clogged. Clean pump strainer pot. Refer to page 5, *Cleaning the Strainer Basket*. Check to ensure the impeller or diffuser are not clogged. Refer to page 6, *Pump Dissasembly*.
Clogged Impeller or Diffuser	Disassemble the pump and clear the blockage. Refer to page 6, *Pump Disassembly* and page 7, *Pump Reassembly* for specific instructions.

Illustrated Parts List

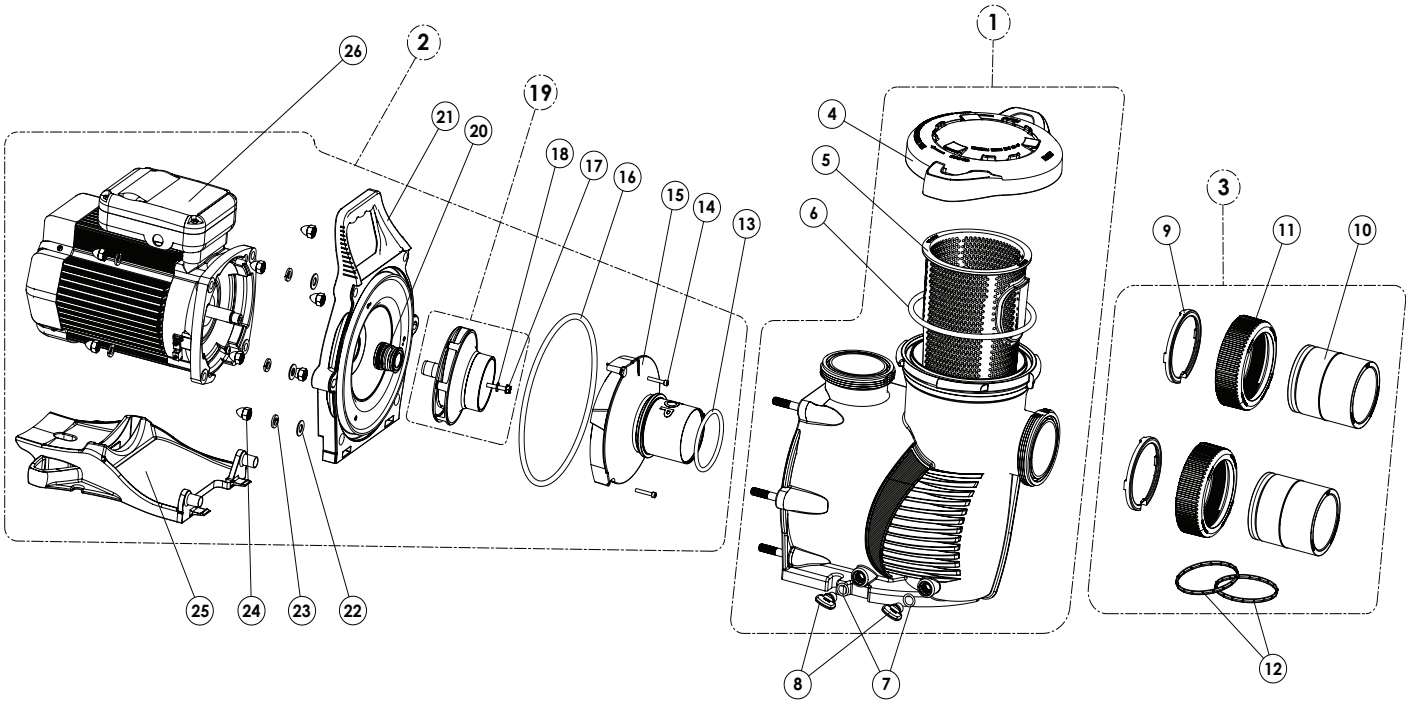

Item No.	Description	WhisperFloXF Part No.	Max-E-ProXF Part No.
1	Strainer Pot Assembly	400000	401000
2	Motor Assembly	See Motor Table	
3	Union Kit	410020	
4	Strainer Pot Lid	400006	401006
5	Strainer Basket	400007z	
6	Lid O-ring	35505-1440	
7	Drain Plug O-ring	192115	
8	Drain Plug	071131	357161
9	Union C-Clip	410001	
10	Union Adapter	410002	
11	Union Nut	411000	
12	Diamond Seal Kit (Incl. 2)	410016z	
13	Diffuser O-ring	350336	
14	Diffuser Screw	353323	
15	Diffuser	See Hydraulic Parts Table	
16	Seal Plate O-ring	351446	
17	Impeller Screw, Plastic-Head (pumps mfg. before 10/7/19)	37337-6080	
	Impeller Screw, Metal-Head (pumps mfg. after 10/7/19)	356073	

Item No.	Description	WhisperFloXF Part No.	Max-E-ProXF Part No.
18	Impeller Screw Washer	072172	
19	Impeller Assembly	See Hydraulics Table	
20	Mechanical Seal	17351-0101S	
21	Seal Plate	400002	401002
	Seal Plate with Mechanical Seal	400031z	400032z
22	Flat Washer	072184	
23	Lock Washer	U43-12SS	
24	Acorn Nut	071413	
25	Motor Base	400004z	401004z
26	Motor	See Motor Table	
-	Hardware and O-rings Kit	400030z	
-	Riser Plater, XF to Challenger	400012	

(-) Not Shown

Motor Table

Model		Motor HP	Motor Assembly P/N (Item #2)		Motor P/N (Item #26)	
WhisperFloXF	Max-E-ProXF		WhisperFloXF	Max-E-ProXF	WhisperFloXF	Max-E-ProXF
XFK-8	XPK-8	2	400617z	401617z	354809s	354810s
XFK-12	XPK-12	3	400618z	401618z	354811s	354812s
XFK-20	XPK-20	5	400619z	401619z	354813s	354814s

Note: Pumps, power ends and motors listed in table above are 3-phase 208-230/460V.

Hydraulic Parts Table

Model		Motor HP	Diffuser P/N (Item #15)	Impeller Assembly P/N (Item #19)
WhisperFloXF	Max-E-ProXF			
XFK-8	XPK-8	2	400010	400020z
XFK-12	XPK-12	3	400010	400015z
XFK-20	XPK-20	5	400011z	400023z

Pump Dimensions

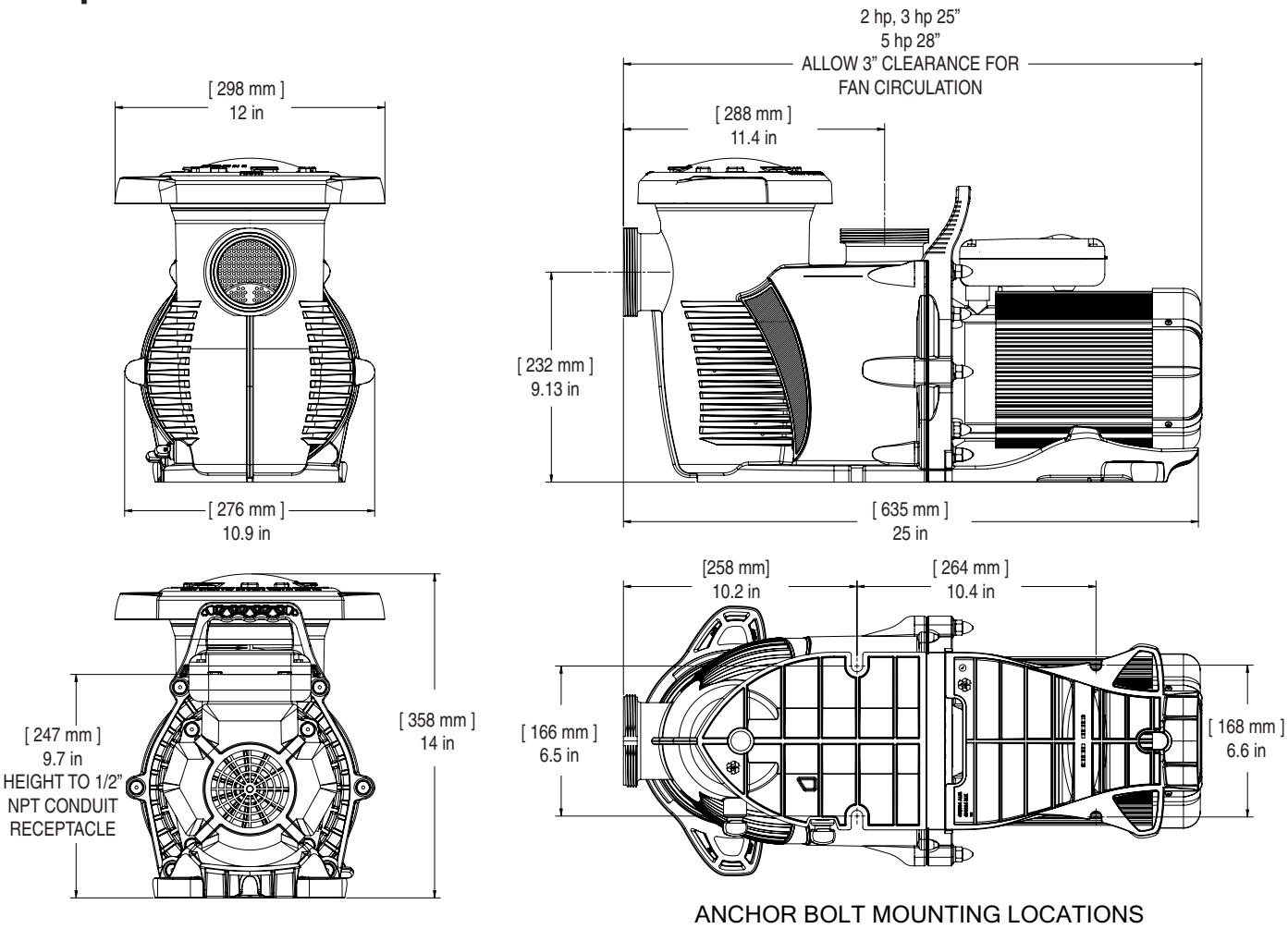

Pump Performance Curves

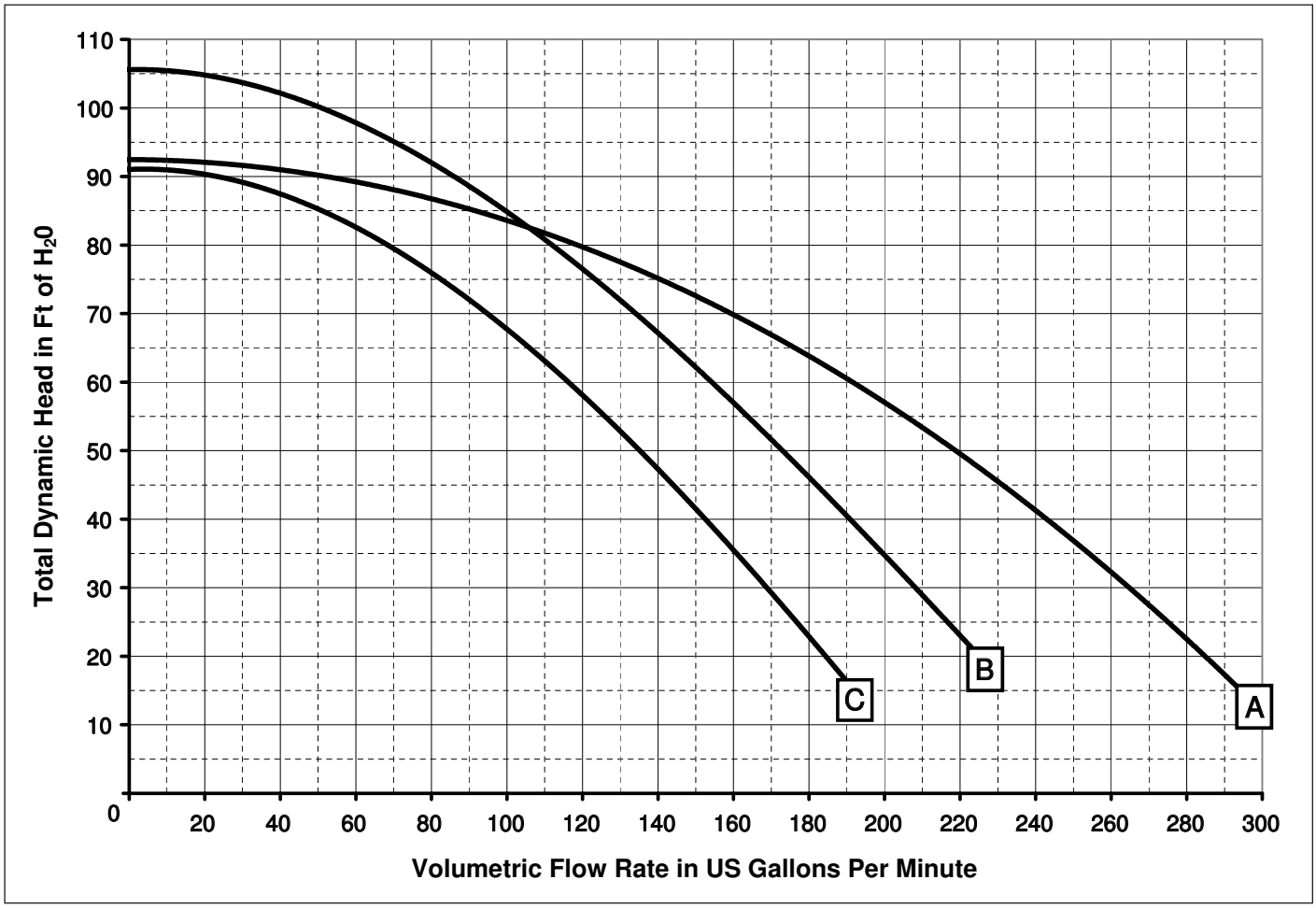

Pump Model	Curve
XFK-8	C
XPK-8	C
XFK-12	B
XPK-12	B
XFK-20	A
XPK-20	A

LIT. PKG. P/N 353077

1620 HAWKINS AVE., SANFORD, NC 27330 • (919) 566-8000
10951 WEST LOS ANGELES AVE., MOORPARK, CA 93021 • (805) 553-5000

WWW.PENTAIR.COM

All indicated Pentair trademarks and logos are property of Pentair. Third party registered and unregistered trademarks and logos are the property of their respective owners. Other trademarks and trade names are those of their respective owners. Because we are continuously improving our products and services, Pentair reserves the right to change specifications without prior notice.

© 2020 Pentair. All rights reserved. This document is subject to change without notice.

P/N 353076 REV. E 10/5/20