SUPERFLO VST
SUPERFLO VS
SUPERMAX VS

VARIABLE SPEED PUMPS

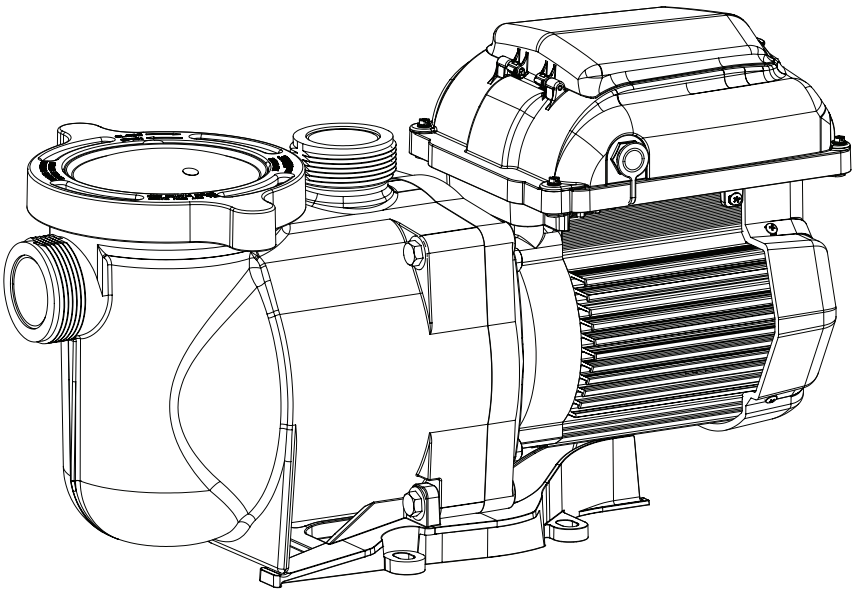

INSTALLATION AND USER'S GUIDE

IMPORTANT SAFETY INSTRUCTIONS

READ AND FOLLOW ALL INSTRUCTIONS

SAVE THESE INSTRUCTIONS

Translated versions of this manual are available online at / La versión en español de este manual del producto, se puede encontrar en línea a / *La version française de ce manuel est disponible à* :
https://www.pentair.com/en/products/pool-spa-equipment/pool-pumps/superflo_vs_variablespeedpump.html
https://www.pentair.com/en/products/pool-spa-equipment/pool-pumps/superflo-vst-pump.html
https://www.pentair.com/en/products/pool-spa-equipment/pool-pumps/supermax_vs_variablespeedpump.html

IMPORTANT SAFETY INSTRUCTIONS

IMPORTANT NOTICE

This guide provides installation and operation instructions for this pump. Consult Pentair with any questions regarding this equipment.

Attention Installer: This guide contains important information about the installation, operation and safe use of this product. This information should be given to the owner and/or operator of this equipment after installation or left on or near the pump.

Attention User: This manual contains important information that will help you in operating and maintaining this product. Please retain it for future reference.

READ AND FOLLOW ALL INSTRUCTIONS
SAVE THESE INSTRUCTIONS

This is the safety alert symbol. When you see this symbol on your system or in this manual, look for one of the following signal words and be alert to the potential for personal injury.

⚠ DANGER Warns about hazards that can cause death, serious personal injury, or major property damage if ignored.

⚠ WARNING Warns about hazards that may cause death, serious personal injury, or major property damage if ignored.

⚠ CAUTION Warns about hazards that may or can cause minor personal injury or property damage if ignored.

NOTE Indicates special instructions not related to hazards.

Carefully read and follow all safety instructions in this manual and on equipment. Keep safety labels in good condition; replace if missing or damaged.

When installing and using this electrical equipment, basic safety precautions should always be followed, include the following:

⚠ DANGER FAILURE TO FOLLOW ALL INSTRUCTIONS AND WARNINGS CAN RESULT IN SERIOUS BODILY INJURY OR DEATH. **THIS PUMP SHOULD BE INSTALLED AND SERVICED ONLY BY A QUALIFIED POOL SERVICE PROFESSIONAL. INSTALLERS, POOL OPERATORS AND OWNERS MUST READ THESE WARNINGS AND ALL INSTRUCTIONS IN THE OWNER'S MANUAL BEFORE USING THIS PUMP. THESE WARNINGS AND THE OWNER'S MANUAL MUST BE LEFT WITH THE POOL OWNER.**

⚠ WARNING Do not permit children to use this product.

⚠ WARNING **RISK OF ELECTRICAL SHOCK.** Connect only to a branch circuit protected by a ground-fault circuit-interrupter (GFCI). Contact a qualified electrician if you cannot verify that the circuit is protected by a GFCI.

⚠ WARNING This unit must be connected only to a supply circuit that is protected by a ground-fault circuit-interrupter (GFCI). Such a GFCI should be provided by the installer and should be tested on a routine basis. To test the GFCI, push the test button. The GFCI should interrupt power. Push the reset button. Power should be restored. If the GFCI fails to operate in this manner, the GFCI is defective. If the GFCI interrupts power to the pump without the test button being pushed, a ground current is flowing, indicating the possibility of an electric shock. Do not use this pump. Disconnect the pump and have the problem corrected by a qualified service representative before using.

⚠ CAUTION This pump is for use with permanent swimming pools and may also be used with hot tubs and spas if so marked. Do not use with storable pools. A permanently-installed pool is constructed in or on the ground or in a building such that it cannot be readily disassembled for storage. A storable pool is constructed so that it is capable of being readily disassembled for storage and reassembled to its original integrity.

General Warnings

- Never open the inside of the drive or motor enclosure. There is a capacitor bank that holds a 230 VAC charge even when there is no power to the unit.
- The pump is not submersible.
- The pump is capable of high flow rates; use caution when installing and programming to limit pumps performance potential with old or questionable equipment.
- Code requirements for electrical connection differ from country to country, state to state, as well as local municipalities. Install equipment in accordance with the National Electrical Code and all applicable local codes and ordinances.
- Before servicing the pump; switch OFF power to the pump by disconnecting the main circuit to the pump.
- This appliance is not intended for use by persons (including children) of reduced physical, sensory or mental capabilities, or lack of experience and knowledge, unless they have been given supervision or instruction concerning the use of the appliance by a person responsible for their safety.

⚠ DANGER SUCTION ENTRAPMENT HAZARD: STAY OFF THE MAIN DRAIN AND AWAY FROM ALL SUCTION OUTLETS! **THIS PUMP IS NOT EQUIPPED WITH SAFETY VACUUM RELEASE SYSTEM (SVRS) PROTECTION AND DOES NOT PROTECT AGAINST BODY OR LIMB ENTRAPMENTS, DISEMBOWELMENTS (WHEN A PERSON SITS ON A BROKEN OR UNCOVERED POOL DRAIN) OR HAIR ENTANGLEMENTS.**

THIS PUMP PRODUCES HIGH LEVELS OF SUCTION AND CREATES A STRONG VACUUM AT THE MAIN DRAIN AT THE BOTTOM OF THE BODY OF WATER. THIS SUCTION IS SO STRONG THAT IT CAN TRAP ADULTS OR CHILDREN UNDER WATER IF THEY COME IN CLOSE PROXIMITY TO A DRAIN OR A LOOSE OR BROKEN DRAIN COVER OR GRATE.

THE USE OF UNAPPROVED COVERS OR ALLOWING USE OF THE POOL OR SPA WHEN COVERS ARE MISSING, CRACKED OR BROKEN CAN RESULT IN BODY OR LIMB ENTRAPMENT, HAIR ENTANGLEMENT, BODY ENTRAPMENT, EVISCERATION AND/OR DEATH.

The suction at a drain or outlet can cause:

Limb Entrapment: When a limb is sucked or inserted into an opening resulting in a mechanical bind or swelling. This hazard is present when a drain cover is missing, broken, loose, cracked or not properly secured.

Hair Entanglement: When the hair tangles or knots in the drain cover, trapping the swimmer underwater. This hazard is present when the flow rating of the cover is too small for the pump or pumps.

Body Entrapment: When a portion of the body is held against the drain cover trapping the swimmer underwater. This hazard is present when the drain cover is missing, broken or the cover flow rating is not high enough for the pump or pumps.

Evisceration/Disembowelment: When a person sits on an open pool (particularly a child wading pool) or spa outlet and suction is applied directly to the intestines, causing severe intestinal damage. This hazard is present when the drain cover is missing, loose, cracked, or not properly secured.

Mechanical Entrapment: When jewelry, swimsuit, hair decorations, finger, toe or knuckle is caught in an opening of an outlet or drain cover. This hazard is present when the drain cover is missing, broken, loose, cracked, or not properly secured.

NOTE: ALL SUCTION PLUMBING MUST BE INSTALLED IN ACCORDANCE WITH THE LATEST NATIONAL AND LOCAL CODES, STANDARDS AND GUIDELINES.

IMPORTANT SAFETY INSTRUCTIONS

⚠WARNING **TO MINIMIZE THE RISK OF INJURY DUE TO SUCTION ENTRAPMENT HAZARD:**

- A properly installed and secured ANSI/ASME A112.19.8 approved anti-entrapment suction cover must be used for each drain.
- Each suction cover must be installed at least three (3') feet apart, as measured from the nearest point to nearest point.
- Regularly inspect all covers for cracks, damage and advanced weathering.
- If a cover becomes loose, cracked, damaged, broken or is missing, replace with an appropriate certified cover.
- Replace drain covers as necessary. Drain covers deteriorate over time due to exposure to sunlight and weather.
- Avoid getting hair, limbs or body in close proximity to any suction cover, pool drain or outlet.
- Disable suction outlets or reconfigure into return inlets.

⚠WARNING The pump can produce high levels of suction within the suction side of the plumbing system. These high levels of suction can pose a risk if a person comes within the close proximity of the suction openings. A person can be seriously injured by this high level of vacuum or may become trapped and drown. It is absolutely critical that the suction plumbing be installed in accordance with the latest national and local codes for swimming pools.

⚠WARNING A clearly labeled emergency shut-off switch for the pump must be in an easily accessible, obvious place. Make sure users know where it is and how to use it in case of emergency.

The Virginia Graeme Baker (VGB) Pool and Spa Safety Act creates new requirements for owners and operators of commercial swimming pools and spas.

Commercial pools or spas constructed on or after December 19, 2008, shall utilize:

(A) A multiple main drain system without isolation capability with suction outlet covers that meet ASME/ANSI A112.19.8a Suction Fittings for Use in Swimming Pools, Wading Pools, Spas, and Hot Tubs and either:

(i) A safety vacuum release system (SVRS) meeting ASME/ANSI A112.19.17 Manufactured Safety Vacuum Release systems (SVRS) for Residential and Commercial Swimming Pool, Spa, Hot Tub, and Wading Pool Suction Systems and/or ASTM F2387 Standard Specification for Manufactured Safety Vacuum Release Systems (SVRS) for Swimming pools, Spas and Hot Tubs or

(ii) A properly designed and tested suction-limiting vent system or

(iii) An automatic pump shut-off system.

Commercial pools and spas constructed prior to December 19, 2008, with a single submerged suction outlet shall use a suction outlet cover that meets ASME/ANSI A112.19.8a and either:

(A) A SVRS meeting ASME/ANSI A112.19.17 and/or ASTM F2387, or

(B) A properly designed and tested suction-limiting vent system, or

(C) An automatic pump shut-off system, or

(D) Disabled submerged outlets, or

(E) Suction outlets shall be reconfigured into return inlets.

⚠CAUTION **For Installation of Electrical Controls at Equipment Pad (ON/OFF Switches, Timers and Automation Load Center)**

Install all electrical controls at equipment pad, such as on/off switches, timers, and control systems, etc. to allow the operation (startup, shut-down, or servicing) of any pump or filter so the user does not place any portion of his/her body over or near the pump strainer lid, filter lid or valve closures. This installation should allow the user enough space to stand clear of the filter and pump during system start-up, shut down or servicing of the system filter.

⚠DANGER **HAZARDOUS PRESSURE: STAND CLEAR OF PUMP AND FILTER DURING START UP.**

Circulation systems operate under high pressure. When any part of the circulating system (i.e. locking ring, pump, filter, valves, etc.) is serviced, air can enter the system and become pressurized. Pressurized air can cause the pump housing cover, filter lid, and valves to violently separate which can result in severe personal injury or death. Filter tank lid and strainer cover must be properly secured to prevent violent separation. Stand clear of all circulation system equipment when turning on or starting up pump.

Before servicing equipment, make note of the filter pressure. Be sure that all controls are set to ensure the system cannot inadvertently start during service. Turn off all power to the pump. **IMPORTANT: Place filter manual air relief valve in the open position and wait for all pressure in the system to be relieved.**

Before starting the system, fully open the manual air relief valve and place all system valves in the "open" position to allow water to flow freely from the tank and back to the tank. Stand clear of all equipment and start the pump.

IMPORTANT: Do not close filter manual air relief valve until all pressure has been discharged from the valve and a steady stream of water appears. Observe filter pressure gauge and be sure it is not higher than the pre-service condition.

General Installation Information

- All work must be performed by a qualified service professional, and must conform to all national, state, and local codes.
- Install to provide drainage of compartment for electrical components.
- These instructions contain information for a variety of pump models and therefore some instructions may not apply to a specific model. All models are intended for use in swimming pool applications. The pump will function correctly only if it is properly sized to the specific application and properly installed.

⚠WARNING Pumps improperly sized or installed or used in applications other than for which the pump was intended can result in severe personal injury or death. These risks may include but not be limited to electric shock, fire, flooding, suction entrapment or severe injury or property damage caused by a structural failure of the pump or other system component.

Pumps and replacement motors that are single speed and one (1) Total HP or greater cannot be sold, offered for sale, or installed in a residential pool for filtration use in California, Title 20 CCR sections 1601-1609.

CUSTOMER SERVICE AND TECHNICAL SUPPORT

Hours: 8:00AM to 7:30PM EST (5:00AM - 4:30PM PST)

Call: (800) 831-7133

Visit: www.pentair.com

Fax: (800) 284-4151

TABLE OF CONTENTS

Important Safety Instructions ..... **i**

Introduction **1**
- Pump Features 1
- Motor Features 1
- Drive Features 1
  - External Control 1

Using the Drive Keypad **2**

Installation **3**
- Location 3
- Piping 3
- Fitting and Valves 3
- Electrical Installation 4
  - Wiring 4
  - Grounding 4
  - Bonding 4
- External Control via RS-485 5
  - Control System Pump Settings 5
- External Control via Digital Inputs 6
  - Using the Pump's Output Signal 6
  - Using an External Input Signal 7
- External Control Only Mode 7

Operation **8**
- Setting the Clock and Pump Address 8
- Using the Default Schedule 8
- Programming a Custom Schedule 9
  - Speed Priorities (Non-External Control) 10
- Operating the Pump While Running 10
  - Quick Clean 10
  - Priming 11
- Programming Quick Clean 12
- Keypad Lockout 12
- Factory Reset 13

Maintenance **14**
- Cleaning the Pump Strainer Basket 14
- Winterizing 14

Servicing **15**
- Motor Care 15
- Pump Disassembly 15
- Shaft Seal Replacement 16
- Pump Reassembly 16
- Restarting the Pump 17

Troubleshooting **18**
- Troubleshooting Chart 18
- Alarms and Fault Codes 19

Replacement Parts **20**
- Pumps Manufactured AFTER 11/02/20 20
- Pumps Manufactured BEFORE 11/02/20 21

Technical Data **22**
- Performance Curves 22
- Specifications and Dimensions 22

INTRODUCTION

The perfect choice for all types of pools, SuperFlo VST, SuperFlo VS and SuperMax VS Variable Speed Pumps are designed to be your best choice for a variety of in-ground pools.

The thick walled pump body, permanent magnet motor, and highly engineered hydraulics make this rugged and tested design perfect for any pool, spa, water feature, or fountain.

All Pentair pumps incorporate innovative hydraulic engineering that has been refined for over 40 years. Compact, rugged, and easy to maintain, this pump will deliver years of reliable service.

Pump Features

- Extremely quiet operation
- Unionized fittings (1.5” and 2”) for simple replacement
- See-through strainer pot lid allows easy inspection of strainer basket
- Self-priming for quick, easy start-up
- WEF 9.0 THP 2.2

Motor Features

- High-Efficiency Permanent Magnet Motor
- 56 Square Flange
- Totally Enclosed Fan Cooled (TEFC)

Drive Features

The pump features a premium efficiency variable frequency drive that provides flexibility in terms of motor speed and duration settings.

⚠WARNING This pump is for use with 115/208-230 Vrms nominal, and in pool pump applications ONLY. Connection to the wrong voltage, or use in other applications may cause damage to equipment or personal injury.

The pump's drive controls the speed settings as well as run durations. The pump can operate at speeds ranging between 450 and 3450 RPM and will operate within the voltage range of 115-230 Vrms nominal at either 50 or 60Hz input frequency.

The pump is intended to run at the lowest speeds needed to maintain a sanitary environment and, at the same time, minimize energy consumption. Factors such as pool size, the presence of additional water features, type of chemicals used to maintain sanitary conditions, and local environmental factors will impact optimal programming to maximize energy conservation. Determining the optimal settings and programming for your pool may require some trial-and-error.

- Simple user interface
- UV and rain-proof enclosure
- Onboard time of day schedule
- Adjustable priming mode
- Programmable Quick Clean mode
- Pump alarm display and retention
- Accepts 115-230V, 50/60Hz input power
- Auto power limiting protection circuit
- 24hr. clock retention for power outages
- Keypad lockout mode

External Control

This pump can be externally controlled via digital inputs using the Digital Input Wiring Kit (P/N 353129Z - Almond) or the RS-485 Automation Wiring Kit (P/N 356324Z - Black). See *External Control via Digital Inputs*, page 6.

SuperFlo VST and SuperMax VS pumps can be externally controlled by most Pentair control systems via an RS-485 connection using the RS-485 Automation Wiring Kit (P/N 356324Z - Black). The pump address and other settings can be programmed from the pump's keypad. See *External Control via RS-485*, page 5.

When connected to external controls, the pump will prioritize commands as follows:
RS-485 > Digital Inputs > Drive Programmed Schedule

Refer to the control system manual for further details on how to connect and program your pump with your control system.

USING THE DRIVE KEYPAD

Before operating the pump for the first time, the pump's internal clock and operational schedules must be programmed. Refer to *Setting the Clock and Pump Address, page 8* and *Programming Custom Schedules, page 9* for instructions regarding the programming of this pump for scheduled operation.

The pump can be programmed and controlled from the drive keypad. Pump features and settings are also accessed using this keypad.

Note: Functionality may vary based on other active features such External Control Only Mode and/or Keypad Lockout.

Note: Always close the keypad cover after use. This will prevent damage to the keypad and other drive components.

CAUTION	Only press keypad buttons with your fingers. Using screwdrivers, pens or other tools to program the pump will damage the keypad.
WARNING	If power is connected to the pump motor, pressing any of the following buttons referred to in this section could result in the motor starting. Failure to recognize this could result in personal injury or damage to equipment.

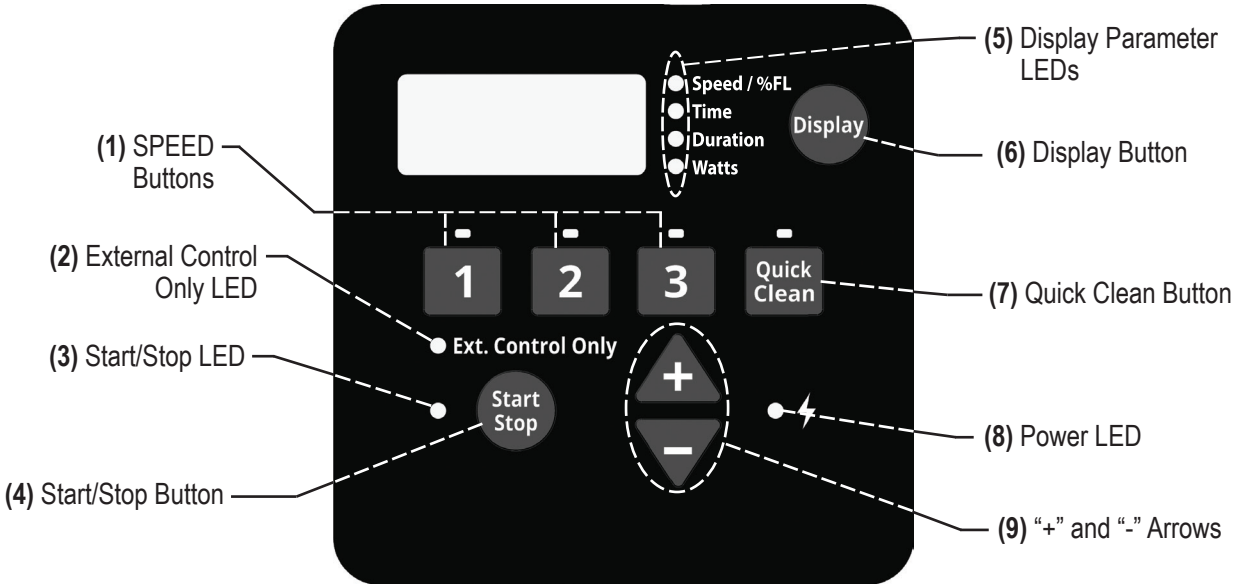

1. **SPEED Buttons -** Used to select a desired speed program. When the LED above a SPEED Button is illuminated that program has been selected or is currently running. A blinking LED indicates that an External Control has activated that program.
2. **External Control Only LED -** Indicates whether the pump is in External Control mode. When LED is illuminated the drive-programmed schedules are disabled and only commands from digital inputs will be acted upon.
3. **Start/Stop LED -** Indicates whether the pump is in a Start State. When illuminated the pump can be started at any time by external controls, drive-programmed schedules or manual inputs. When the pump is stopped and the LED is not illuminated, the pump is unable to run from any type of input.
4. **Start/Stop Button -** Used to start and stop the pump. When the pump is stopped and the Start/Stop LED is not illuminated, the pump is unable to run from any input.
5. **Display Parameter LEDs** - When illuminated, LED indicates the information being displayed on screen. A blinking LED indicates that the parameter is currently being edited.
6. **Display Button** - Used to toggle between the different available display modes. This button is also used to set the clock, screen brightness and pump address.
7. **Quick Clean Button** - Used to run the speed and duration programmed for Quick Clean. When the LED above the Quick Clean Button is illuminated a Quick Clean cycle is active.
8. **Power LED** - When illuminated, LED indicates that there is live power being supplied to the pump.
9. **"+" and "-" Arrows** - Used to make adjustments to the pump settings. The "+" arrow increases a value, while "-" decreases a value. Pressing and holding either arrow button will increase or decrease incremental changes faster.

INSTALLATION

Only a qualified plumbing professional should install the pump. Refer to *IMPORTANT SAFETY INSTRUCTIONS on page i-ii* for additional installation and safety information.

Location

Note: Do not install this pump within an outer enclosure or beneath the skirt of a hot tub or spa unless marked accordingly.

Note: Ensure that the pump is mechanically secured to the equipment pad.

ENSURE THE INSTALL LOCATION MEETS THE FOLLOWING REQUIREMENTS:

1. Install the pump as close to the pool or spa as possible. To reduce friction loss and improve efficiency, use short, direct suction and return piping.
2. Install a minimum of 5 ft. (1.5 m) from the inside wall of the pool and spa. Canadian installations require a minimum of 9.8 ft. (3 m) from the inside wall of the pool.
3. Install the pump a minimum of 3 ft. (0.9 m) from the heater outlet.
4. Do not install the pump more than 10 ft. (3.1 m) above the water level.
5. Install the pump in a well ventilated location protected from excess moisture (i.e. rain gutter downspouts, sprinklers, etc.).
6. Install the pump with a rear clearance of at least 3 inches (7.6 cm) so that the motor can be removed easily for maintenance and repair. See **Figure 1.**

Piping

1. For improved pool plumbing, it is recommended to use a larger pipe size.
2. Piping on the suction side of the pump should be the same or larger than the return line diameter.
3. Plumbing on the suction side of the pump should be as short as possible.
4. For most installations Pentair recommends installing a valve on both the pump suction and return lines so that the pump can be isolated during routine maintenance. However, we also recommend that a valve, elbow or tee installed in the suction line should be no closer to the front of the pump than five (5) times the suction line diameter. See **Figure 2**.

   Example: A 2.5" pipe requires a 12.5" (31.8 cm) straight run in front of the suction port. This will help the pump prime faster and last longer.

   Note: DO NOT install 90° elbows directly into the suction or discharge ports.

Figure 1

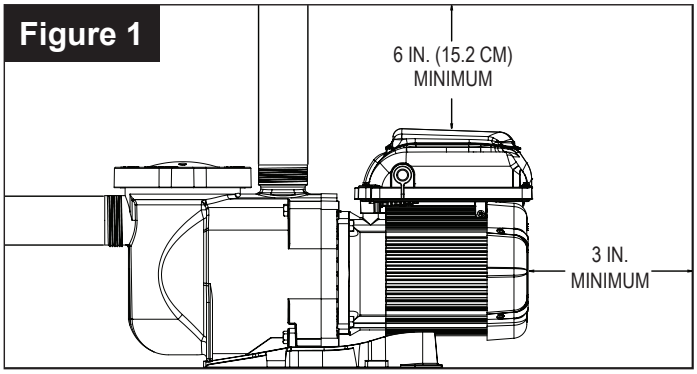

Figure 2

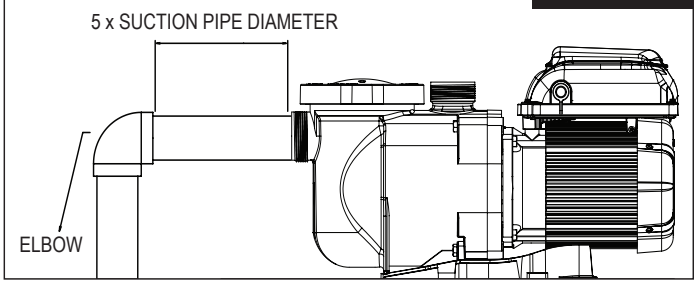

Fittings and Valves

1. Do not install 90° elbows directly into suction port.
2. Flooded suction systems should have gate valves installed on suction and discharge pipes for maintenance, however, the suction gate valve should be no closer than five times the suction pipe diameter as described in this section.
3. Use a check valve in the discharge line when using this pump for any application where there is significant height to the plumbing after the pump.
4. Be sure to install check valves when plumbing in parallel with another pump. This helps prevent reverse rotation of the impeller and motor.

Electrical Installation

⚠WARNING **RISK OF ELECTRICAL SHOCK OR ELECTROCUTION.** The pump must be installed by a licensed or certified electrician or a qualified service professional in accordance with the National Electrical Code and all applicable local codes and ordinances. Improper installation will create an electrical hazard which could result in death or serious injury to users, installers, or others due to electrical shock, and may also cause damage to property.

Always disconnect power to the pump at the circuit breaker before servicing the pump. Failure to do so could result in death or serious injury to service people, pool users or others due to electric shock and/or property damage.

Read all servicing instructions before working on the pump.

The pump accepts 115-230 V, 50 or 60 Hz single phase input power. Power Connections (**Figure 3**) are capable of handling up to 10 AWG solid or stranded wire.

The motor controller will automatically regulate the pump speed when running on lower voltage to keep current below 13.6 A. No wiring change is required to run the pump on 115 V nominal power, the same terminals are used as with high voltage wiring.

The drive will operate on 2-Phase Line-Line-Ground electrical systems as well as Line-Neutral-Ground systems.

Wiring

1. Ensure all electrical breakers and switches are turned off before wiring the motor.

   ⚠WARNING **STORED CHARGE** - Wait at least 5 minutes before servicing.

2. Ensure supply voltage meets the requirements listed on the motor nameplate.
3. For wiring sizes and general requirements, follow specifications defined by the current National Electric Code and any local codes. When in doubt use a heavier gauge (larger diameter) wire.
4. Ensure all electrical connections are clean and tight.
5. Cut all wiring to the appropriate length so they do not overlap or touch when connected to terminals.
6. ALWAYS reinstall the drive lid after electrical installation or before leaving the pump unsupervised during servicing. This will prevent rainwater, dust or other foreign matter from accumulating in the drive.

   Note: Ensure wires are not pinched between the drive body and lid.

Grounding

1. Permanently ground the motor using the Grounding Terminal (**Figure 3**) inside the drive wiring compartment. Refer to the current National Electrical Code and any local codes for wire size and type requirements. Ensure the ground wire is connected to an electrical service ground.
2. ONLY connect the pump to a supply circuit protected by a ground-fault circuit-interrupter (GFCI) circuit breaker.

   Note: Pentair offers a 2-Pole 20 Amp GFCI breaker (P/N PA220GF).

   Note: The pump should be wired to its own independent circuit **unless the pump is operated in tandem with a Pentair salt chlorine generator.**

Bonding

1. Using the Bonding Lug located on the side of the motor (**Figure 3**), bond the motor to all metal parts of the pool structure, electrical equipment, metal conduit and metal piping within 5 ft. (1.5 m) of the inside walls of the swimming pool, spa or hot tub in accordance with the current National Electrical Code and any local codes.
2. Solid copper bonding conductor of 8 AWG or larger is required. For Canadian installations, 6 AWG or larger solid copper bonding conductor is required.

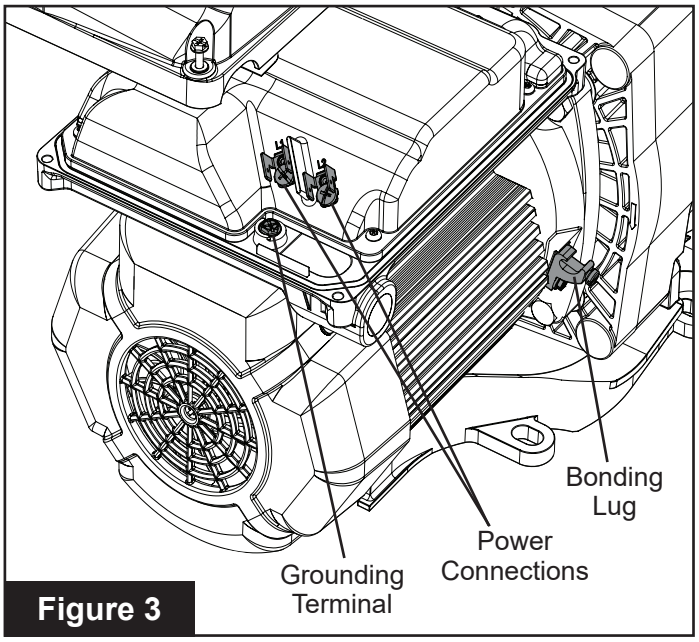

Figure 3

External Control via RS-485

The following instructions only apply to SuperFlo VST and SuperMax VS pumps manufactured after 10/15/20. For all other pumps, refer to *External Control via Digital Inputs on page 6*.

These pumps can be controlled from certain Pentair control systems, via an RS-485 signal, when paired with the RS-485 Automation Wiring Kit (P/N 356324z - Black).

Note: IntelliConnect Control and Monitoring Systems can NOT externally control this pump via RS-485. The pump will need to be connected via digital inputs. Refer to *External Control via Digital Inputs* on page 6.

Note: If the pump is manually stopped using the **Start/Stop** button, the pump will not run until the **Start/Stop** button is pressed. If the Start/Stop LED is illuminated, the pump is active and can be controlled externally.

Only the GREEN and YELLOW conductors will be used to wire the pump for external control via RS-485. See **Figure 4**.

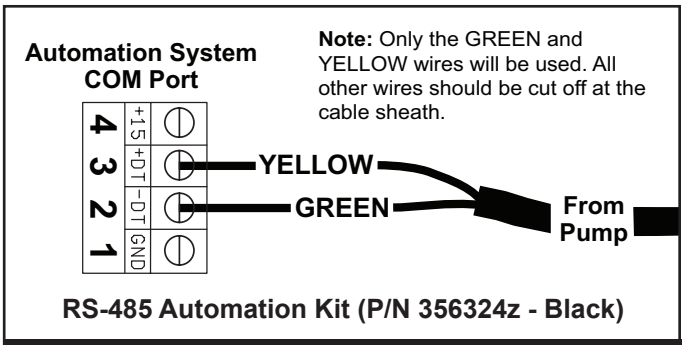

Figure 4

Control System Pump Settings

Pump Type: Variable Speed (VS)

Control systems with older firmware may require the pump be designated "IntelliFlo VS".

This pump will not process control system commands if designated a Variable Flow (VF) or Variable Speed/ Flow (VSF) pump.

Pump Address: 1 or 2

Ensure the assigned pump address matches the pump address in the control system. Refer *Setting the Clock and Pump Address, page 8*.

Refer to the control system manual for more information on connecting and programming your pump.

TO WIRE FOR EXTERNAL CONTROL USING RS-485:

1. Route the communication cable from the Pump Com Port (**Figure 5**) to the control system wiring compartment.
2. Ensure the cable reaches all necessary terminals and cut to the necessary length.
3. Strip the cable 3/4" (19 mm).
4. Strip the 24 AWG GREEN and YELLOW conductors 1/2" (13 mm).
5. Cut back and terminate unused conductors according to local and national electrical codes.
6. Connect YELLOW and GREEN conductors to the control system as shown in **Figure 4**.
7. Program the pump's internal clock. Refer to *Setting the Clock and Pump Address on page 8*.
8. Program SPEED 1 to a speed of 0 RPM and duration of 24 hours. Refer to *Programming Custom Schedules on page 9*.
9. Disable priming at the pump. Priming duration and speeds will be controlled by the control system.

   Note: If priming is not disabled at the pump, priming will be continue to be controlled by the pump. Refer to *Priming on page 11*.
10. Plug the communication cable into the Pump Com Port (**Figure 5**).

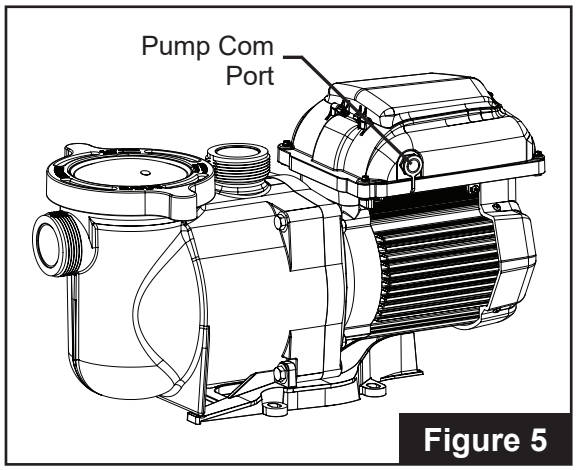

Figure 5

External Control via Digital Inputs

When paired with either the Digital Input Wiring Kit (P/N 353129z - Almond) or RS-485 Automation Wiring Kit (P/N 356324z - Black), the pump can be externally controlled by digital input signals.

Note: If the pump is manually stopped using the **Start/Stop** button, the pump will not run until the **Start/Stop** button is pressed. If the Start/Stop LED is illuminated, the pump is active and can be controlled externally.

The communication cable provided with these kits features a watertight connection that plugs into the Pump Com Port (**Figure 5** on page 5). The opposite end of the cable has either 6 or 8 conductors defined in **Table 1**.

A trigger signal is required to externally control the pump via digital inputs. This required output signal can to be provided in one of the following ways:

- By the pump drive. Refer to *Using the Pump's Output Signal*.
- By an external low voltage signal. Refer to *Using an External Input Signal* on page 7.

Signal Description	Signal Range	Wire Color	
		Wiring Kit 353129z (Almond)	Wiring Kit 356324z (Black)
+5V Output for Digital Inputs	0-20mA	Red	Red
RS-485 A	-7V to +12V	-	Yellow
RS-485 B	-7V to +12V	-	Green
SPEED 1 Digital Input	0, 5-30V AC/DC	Green	White
SPEED 2 Digital Input	0, 5-30V AC/DC	Yellow	Blue
SPEED 3 Digital Input	0, 5-30V AC/DC	Orange	Orange
QUICK CLEAN Digital Input	0, 5-30V AC/DC	Brown	Brown
Common Ground	0V	Black	Black

Table 1

Using the Pump's Output Signal

1. Route the communication cable from the Pump Com Port (**Figure 5** on page 5) to the control system wiring compartment.
2. Ensure the cable reaches all necessary terminals and cut to the necessary length.
3. Strip the cable 3/4" (19 mm).
4. Strip all 24 AWG conductors 1/2" (13 mm).
5. **If using Digital Input Wiring Kit (P/N 353129Z - Almond):** Wire communication cable to control system as shown in **Figure 6A**.

   If using RS-485 Automation Wiring Kit (P/N 356324Z - Black): Wire communication cable to control system as shown in **Figure 6B**.

   Note: Unused conductors should be cut off and terminated according to local and national electrical codes.
6. Using the pump keypad, program the pump's internal clock. Refer to *Setting the Clock and Pump Address on page 8*.
7. Using the pump keypad, disable priming. Refer to *Priming on page 11*.
8. When ready to start the pump, place the pump into External Control Only mode. Refer to *External Control Only Mode on page 7*.
9. Plug the communication cable into the Pump Com Port.

Figure 6A Digital Input Wiring Kit (P/N 353129z - Almond)

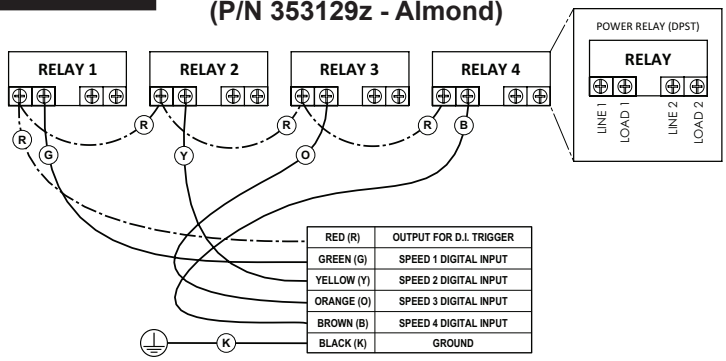

Figure 6B RS-485 Automation Kit (P/N 356324z - Black)

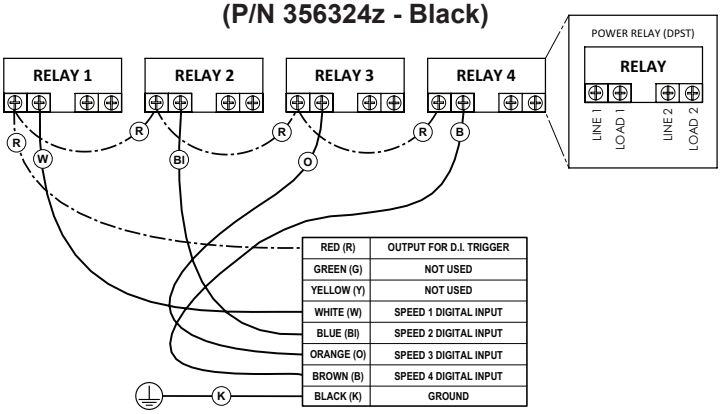

Using an External Input Signal

When using an externally supplied low voltage signal for external control, input voltage must be within 5-30V AC/DC. The wiring kit's RED wire is only intended to carry the +5V output signal from the drive and will NOT be used.

⚠CAUTION **The +5V signal (RED wire) is output from the drive only and should never be wired to another power supply. Improper wiring will damage the drive.**

The external output signal can be regulated by switches or relays to initiate a desired pump function. If multiple digital inputs are active, the priority is: **QUICK CLEAN > SPEED 3 > SPEED 2 > SPEED 1.**

TO WIRE FOR EXTERNAL CONTROL USING AN EXTERNAL INPUT SIGNAL:

1. Route the communication cable from the Pump Com Port (**Figure 5** on page 5) to the control system wiring compartment.
2. Ensure the cable reaches all necessary terminals and cut to the necessary length.
3. Strip the cable 3/4" (19 mm).
4. Strip all 24 AWG conductors 1/2" (13 mm).
5. **If using Digital Input Wiring Kit (P/N 353129z - Almond):** Wire communication cable to control system as shown in **Figure 7A**.

   If using RS-485 Automation Wiring Kit (P/N 356324z - Black): Wire communication cable to control system as shown in **Figure 7B**.

   Note: Unused conductors should be cut off and terminated according to local and national electrical codes.
6. Using the pump keypad, program the pump's internal clock. Refer to *Setting the Clock and Pump Address on page 8*.

Figure 7A Digital Input Wiring Kit (P/N 353129z - Almond)

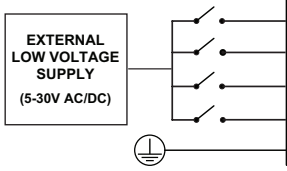

RED	⚠ DO NOT USE ⚠
GREEN	SPEED 1 DIGITAL INPUT
YELLOW	SPEED 2 DIGITAL INPUT
ORANGE	SPEED 3 DIGITAL INPUT
BROWN	QUICK CLEAN DIGITAL INPUT
BLACK	GROUND

Figure 7B RS-485 Automation Kit (P/N 356324z - Black)

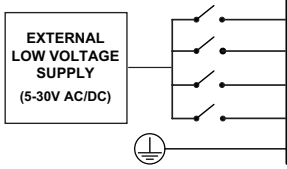

RED	⚠ DO NOT USE ⚠
YELLOW	NOT USED
GREEN	NOT USED
WHITE	SPEED 1 DIGITAL INPUT
BLUE	SPEED 2 DIGITAL INPUT
ORANGE	SPEED 3 DIGITAL INPUT
BROWN	QUICK CLEAN DIGITAL INPUT
BLACK	GROUND

7. Using the pump keypad, disable priming. Refer to *Priming* on page 11.
8. When ready to start the pump, place the pump into External Control Only mode. Refer to *External Control Only Mode*.
9. Plug the communication cable into the Pump Com Port.

External Control Only Mode

External Control Only mode will only allow the pump to run from external controls/inputs. When this mode is active the programmed pump schedule is deactivated, and user speed requests from the keypad will not be accepted. If the pump is stopped a user can still program the speeds for all four **SPEED** buttons.

Note: The following steps are required if controlling the pump via digital inputs, but optional if controlling via RS-485. The pump will prioritize RS-485 commands over digital input commands.

TO ENABLE/DISABLE EXTERNAL CONTROL ONLY MODE:

1. If the pump is running or Start/Stop LED is illuminated, press the **Start/Stop** button to stop the pump.
2. Press and hold the **Start/Stop** button for 10 seconds to enable/disable External Control Only mode.
   The Ext. Control Only LED will illuminate if enabled. See **Figure 8**.
3. Press the **Start/Stop** button to start the pump.

Figure 8

OPERATION

Before operating the pump for the first time, the pump's internal clock and operational schedules must be programmed by following the steps in this manual. Refer to *Setting the Clock and Pump Address* below and *Programming Custom Schedules on page 9*, for instructions regarding the programming of this pump for scheduled operation.

Setting the Clock and Pump Address

When power is first connected to the pump the clock will blink to indicate that is has not been set. Custom schedules are based on this clock setting, so the clock must be set first.

1. Press and hold **Display** for 3 seconds.
2. Use "**+**" and "**-**" to choose between a 12 or 24 hour time format.
3. Press **Display** to advance.
4. Use "**+**" and "**-**" to program the current time.

   Note: In the 12 hour time format AM/PM will display in the bottom right corner.
5. Press **Display** to advance.
6. Use "**+**" and "**-**" to adjust the screen backlight brightness.
7. Press **Display** to advance.
8. **If controlling pump via RS-485:** Use "**+**" and "**-**" to assign one of two pump addresses, then press **Display** to exit the menu.

   If controlling the pump via digital inputs or from the drive: Press **Display** twice to exit the menu.

During a power outage, the drive will retain the clock setting for as long as 24 hours. If the power is out longer than 24 hours, the clock will have to be reset. If the drive has lost the user set time, the clock will continuously blink until the time is reset.

Note: When power is returned to the pump after a prolonged outage (24+ hours) the clock will automatically set itself to the Speed 1 start time, blink and advance. The pump will also run the associated schedule from that start time.

Using the Default Schedule

The default schedule is designed to provide sufficient daily turnover for a typical pool. See **Table 2** for default schedule.

	Duration (Hours)	Speed (RPM)
SPEED 1	2	3000
SPEED 2	10	1400
SPEED 3	2	2200

Table 2

The default schedule will operate as follows:

1. SPEED 1 will begin at 8:00am and run at 3000 RPM for a duration of 2 hours.
2. SPEED 2 will begin immediately after SPEED 1 completes. Default SPEED 2 runs at 1400 RPM for 10 hours.
3. SPEED 3 will begin immediately after SPEED 2 completes. Default SPEED 3 runs at 2200 RPM for 2 hours.
4. After SPEED 3 runtime has ended, the pump will enter a stationary/paused state for the next 10 hours.
5. The pump will restart at 8:00am the next morning and cycle through the default schedule again. The pump will continue to run in this in this manner until a custom schedule is programmed.

   Note: The **Start/Stop** button must be pressed, and the Start/Stop LED illuminated, for the pump to run.

Programming Custom Schedules

To customize your pump's schedule, the pump must be stopped. Ensure that the Start/Stop LED is not illuminated.

The clock must be set before programming a custom schedule, unless externally controlling the pump through digital inputs. When controlling the pump by digital inputs, schedules will be based on the automation system's clock.

When programming, the LED next to the parameter you are editing will blink.

"Speed" - *Run Speed*
"Time" - *Start Time*
"Duration" - *Run Time*

TO PROGRAM A CUSTOM SCHEDULE:

1. Press **Start/Stop** to stop the pump.
2. Press "**1**". The SPEED 1 LED and the "Speed" parameter LED will blink while editing. See **Figure 9**.

Figure 9

3. Use "**+**" and "**-**" to adjust the speed in RPM for SPEED 1.

   Note: If operating the pump with external controls, program SPEED 1 speed to 0 RPM.

4. Press "**1**". The SPEED 1 start time will display. The "Time" parameter LED will begin to blink. See **Figure 10**.

Figure 10

5. Use "**+**" and "**-**" to adjust the SPEED 1 start time.
6. Press "**1**". SPEED 1 duration will display. The "Duration" parameter LED will begin to blink. See **Figure 11**.

Figure 11

7. Use "**+**" and "**-**" to adjust the SPEED 1 duration in hours and minutes.

   Note: If operating the pump with external controls, program SPEED 1 duration to 24 hours.

8. SPEED 1 is now successfully programmed.

   Note: Pressing "**1**" will continue to cycle through these parameters, but changes are immediately saved as they are adjusted.

9. Press "**2**". The SPEED 2 LED and "Speed" parameter LED will blink while editing.
10. Use "**+**" and "**-**" to adjust the speed in RPM for SPEED 2.
11. Press "**2**". The SPEED 2 duration will display.

    Note: SPEEDs 2 and 3 do not have a start time, as they begin immediately after the previous SPEED finishes.

12. Use "**+**" and "**-**" to adjust the duration of SPEED 2 in hours and minutes.
13. Repeat steps 9-12 to program SPEED 3 and QUICK CLEAN.

    Note: The duration allowed for SPEED 3 will be limited to the remaining time in a 24 hour day. Any time in the 24 hour day not programmed into SPEEDs 1-3, the pump will remain in a stationary state. *[SPEED 1 + SPEED 2 + SPEED 3 ≤ 24 Hours]*

14. Press **Start/Stop** and ensure the Start/Stop LED is illuminated. The pump is now active and will run the programmed schedule.

    Note: If the pump was stopped using the **Start/Stop** button, the pump will not run until the **Start/Stop** button is pressed again. If the Start/Stop LED is illuminated, the pump is on and will run the programmed schedule.

    Note: If you do not want the pump to run during a specific time of the day, any of the SPEEDs can be programmed to 0 RPM. This ensures the pump will not run during the SPEED duration.

Speed Priorities (Non-External Control)

For schedule duration settings, SPEEDs are prioritized as follows: SPEED 1 -> SPEED 2 -> SPEED 3. SPEED 1 is the highest priority, while SPEED 3 is the lowest.

The drive will not allow a user to program a schedule of more than 24 hours. When the 24th hour of duration is programmed it will take time from the lower priority speeds in order to add them to the SPEED currently being adjusted.

Example:

Starting Schedule (Before Adjustment)
SPEED 1 duration = 20 hours
SPEED 2 duration = 2 hours
SPEED 3 duration = 2 hours

If the user reprograms SPEED 1 to run for 23 hours, SPEED 2 (lower priority speed) will automatically adjust to a 1 hour duration and SPEED 3 (lowest priority speed) will adjust to a 0 hour duration.

End Schedule (After Adjustment)
SPEED 1 duration = 23 hours
SPEED 2 duration = 1 hour
SPEED 3 duration = 0 hours

Operating the Pump While Running

⚠CAUTION If power is connected to the pump, pressing any of the following buttons referred to in this section could result in the motor starting. Failure to recognize this could result in personal injury or damage to equipment.

Pressing the **Display** button will cycle through the current parameters:

- **Speed —** current run speed
- **Time —** current time of day
- **Duration —** amount of time remaining at the current run speed
- **Watts —** watts currently being consumed

Pressing any of the SPEED Buttons (**"1", "2", "3"** or **Quick Clean**) while the pump is running will act as a temporary override. The pump will run the speed and duration programmed for that button. Once completed the pump will return to the appropriate point in the programmed schedule.

Note: If schedule speeds are adjusted while the pump is running, the pump will run the entered speed for the rest of the program's duration, but will not save the adjustments. ***Exception: Adjustments to QUICK CLEAN Speed and Duration are always immediately saved.***

Quick Clean

During a Quick Clean cycle, pressing the "**+**" or "**-**" will change the speed accordingly. Pressing the **Quick Clean** button again within 10 seconds of pressing "**+**" or "**-**" will allow you to adjust Quick Clean duration. These changes will be saved immediately and are the new defaults for Quick Clean. Pressing the **Quick Clean** button again will cycle through the two Quick Clean settings. The pump will exit editing mode if no additional buttons are pressed within 10 seconds.

Note: While in keypad lockout mode the quick clean feature is enabled and the "**+**" and "**-**" buttons can be used to make temporary changes.

A Quick Clean cycle can be stopped early by pressing and holding the **Quick Clean** button for 3 seconds. The pump will return to the appropriate point in the programmed schedule.

When a connected control system is in Service Mode, a pump connected via RS-485 can still run its Quick Clean program. Once Service Mode is enabled the pump display will flash between "**SEr**" and the current Quick Clean speed (**Figure 12**). Once Service Mode is disabled the pump will resume normal operation.

Note: Quick Clean speed will read 0 when Quick Clean is off.

Figure 12

Priming

⚠CAUTION This pump is shipped with Priming mode ENABLED. **The pump will ramp up to 3450 RPM when the pump is initially started.**

Before turning the pump ON:

1. Open filter air relief valve.
2. Open necessary valves.
3. Ensure return line is completely open and clear of any blockages.
4. Ensure pump is filled with water.
5. Stand clear of the filter or other pressurized vessels.

⚠WARNING **DO NOT run the pump dry**, the shaft seal will be damaged and the pump will start leaking. If this occurs, the damaged seal must be replaced. ALWAYS maintain proper water level in your pool (half way up skimmer opening). If the water level falls below the skimmer opening, the pump will draw air through the skimmer, losing the prime and causing the pump to run dry, resulting in a damaged seal. Continued operation in this manner could cause a loss of pressure, resulting in damage to the pump body, impeller and seal and may cause property and personal injury.

Priming will automatically run when the pump is started, except when running a Quick Clean cycle. Default Priming Speed is 3450 RPM, and will last for 5 minutes. The drive will display and cycle through "**Prl** -- Priming Speed, **Prl** -- Remaining Time".

If externally controlling the pump via an RS-485 connection and priming is enabled at both the pump and control system: Both priming timers will start simultaneously, but the pump priming settings will have priority over the control system's.

Note: After the pump's priming cycle has completed, if there is time remaining on the control system's priming timer the pump will run the control system priming speed until the timer expires.

During the priming sequence, priming speed can be adjusted between 1700 and 3450 RPM using the "**+**" and "**-**" arrows. Setting the priming speed below 1700 RPM, will disable priming and the pump will immediately begin to run the scheduled speed.

When priming is disabled and the pump is started, the screen will display, "**Prl -- OFF**" for 10 seconds while running the scheduled speed (see **Figure 11**). This 10 second delay allows time to enable priming by pressing "**+**".

If priming is re-enabled, the pump will transition from the scheduled speed to 1700 RPM. If necessary, priming speed can then be increased 1700 RPM by pressing "**+**". The 5 minute priming countdown timer starts when priming is first engaged.

Priming time can change based on local environmental conditions such as water temperature, atmospheric pressure, and your pool's water level. All of these things should be taken into consideration when setting the priming speed.

Test and verify priming speeds more than once, letting the water drain from the system in between each test.

Note: To prevent air from entering the system, the pump strainer pot should always be filled with water up to the bottom of the suction port.

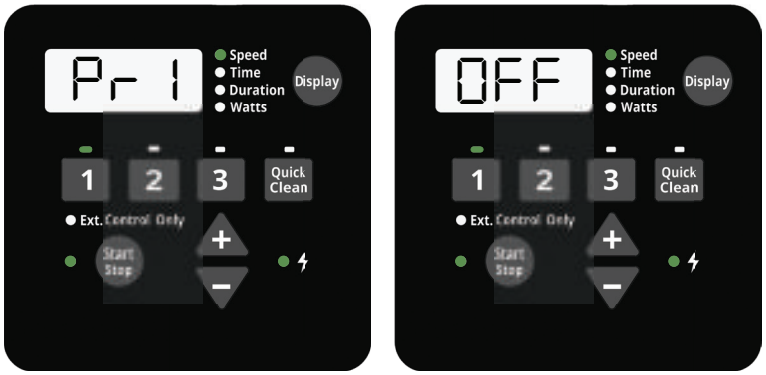

Figure 13

Programming Quick Clean

The pump is equipped with a Quick Clean feature, which can be engaged to temporarily run at higher or lower speeds ranging from 450 to 3450 RPM.

At the end of a Quick Clean cycle, the pump will automatically return to the appropriate point in its programmed schedule.

Note: Pressing and holding Quick Clean for more than 3 seconds will cancel a Quick Clean cycle. The pump will then return to the appropriate point in its programmed schedule.

TO PROGRAM QUICK CLEAN:

1. Press **Start/Stop** to stop the pump.
2. Press **Quick Clean**. The Quick Clean LED and “Speed” parameter LED will blink while editing. See **Figure 14**.

Figure 14

3. Use “**+**” and “**-**” to adjust the Quick Clean speed in RPM.
4. Press **Quick Clean**. The Quick Clean duration will display. The “Duration” parameter LED will blink while editing. See **Figure 15**.

Figure 15

5. Use “**+**” and “**-**” to adjust the Quick Clean duration in hours and minutes.

   Note: It is recommended that you do not set the Quick Clean duration to 0 HRS. Setting the Quick Clean duration to 0 HRS will prevent edits to the duration setting while the motor is running. The motor will need to be stopped.

   Note: Quick Clean duration does not affect the start or stop times of the 24-hour schedule. For example, if Quick Clean runs during a period overlapping with a later part of SPEED 1 and an early part of SPEED 2, the start time of SPEED 3 is not affected.

Keypad Lockout

⚠CAUTION Keypad lockout will not prevent the motor from being stopped by pressing the **Start/Stop** button. If the pump is stopped with the **Start/Stop** button during Keypad Lockout, it can not be restarted until the keypad is unlocked.

The pump features a Keypad Lockout mode. Keypad Lockout is intended to prevent unwanted changes to pump settings. When locked, the pump will only respond to:

- Pressing **Display** to cycle through current pump information.
- Pressing **Start/Stop** to stop the pump and/or enable/disable external control.

  Note: The pump can not be manually restarted using the **Start/Stop** button until the keypad is unlocked.
- Pressing **Quick Clean** to start a quick clean cycle or using the "**+**" or "**-**" buttons to make temporary adjustments to quick clean settings.
- Any drive-programmed or external control schedules, as long as the Start/Stop LED is illuminated.

TO LOCK/UNLOCK THE PUMP:

1. Press and hold the “**1**” and **Quick Clean** buttons for at least 3 seconds.
2. “Loc On” or "Loc Off" will scroll across the screen if succesful.

Factory Reset

The drive can be reset to factory settings if necessary. A Factory Reset will erase all programmed settings and schedules, except for the time of day. Be sure that it is necessary before performing a Factory Reset, as the results are immediate.

Note: Factory Reset can not be performed when in Keypad Lockout mode.

TO PERFORM A FACTORY RESET:

1. If the pump is running, press the **Start/Stop** button to stop the pump.
2. Record all of the custom schedule settings in **Table 3**. You can find these settings by pressing the "**1**", "**2**", **3**, and **Quick Clean** buttons and cycling through all the screens.
3. Record the programmed Priming Speed in **Table 3**.
4. Press and hold "**1**", "**2**", "**3**" and **Quick Clean** for 3 seconds.
5. "**FAct rSt**" will display if factory reset is successful. See **Figure 16**.
6. Reprogram the schedule and priming speed as described in the previous sections.

   The pump must be turned back on with the **Start/Stop** button before it will run again. The pump will run the programmed schedule upon initial start-up.

	Speed (RPM)	Duration (Hours)	Start Time (Time Clock)
SPEED 1			
SPEED 2			
SPEED 3			
QUICK CLEAN			
Priming Speed			

Table 3

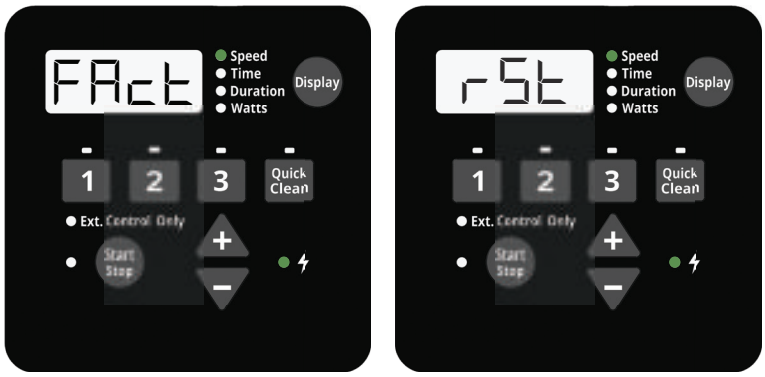

Figure 16

MAINTENANCE

WARNING **DO NOT** open the strainer pot if pump fails to prime or if pump has been operating without water in the strainer pot. Pumps operated in these circumstances may experience a build up of vapor pressure and may contain scalding hot water. Opening the pump may cause serious personal injury. In order to avoid the possibility of personal injury, make sure the suction and discharge valves are open and strainer pot temperature is cool to touch, then open with extreme caution.

WARNING Always disconnect power to the pump at the circuit breaker and disconnect the digital input cable before servicing the pump. Failure to do so could result in death or serious injury to service people, users or others due to electric shock. Read all servicing instructions before working on the pump.

CAUTION To prevent damage to the pump and for proper operation of the system, clean pump strainer and skimmer baskets regularly.

Cleaning the Pump Strainer Basket

The strainer pot is located at the front of the pump and houses the pump strainer basket.

The strainer basket can be viewed through the strainer pot lid and should be visually inspected at least once a week. Regularly emptying and cleaning the strainer basket will lead to higher filter and heater efficiency and prevent unnecessary stress on the pump motor.

TO CLEAN THE STRAINER BASKET:

1. Press **Start/Stop** to stop the pump and shut off all electrical power to the pump at the circuit breaker.
2. Open the filter air relief valve and relieve all pressure from the filtration system.
3. Turn the strainer pot lid counter-clockwise and remove it from the pump.
4. Remove debris and rinse out the basket. Replace the basket if it is cracked or damaged.
5. Place the basket into the strainer pot. Ensure the notch in the bottom of the basket is aligned with the rib in the bottom of the strainer pot.
6. Fill the strainer pot with water up to the inlet port.
7. Clean the lid O-ring and sealing surface of the strainer pot.

   Note: It is important to keep the lid O-ring clean and well lubricated.
8. Reinstall the lid by placing it onto the strainer pot and tightening clockwise until the lid handles are horizontal.

   Note: Ensure the lid O-ring is properly placed and is not being pinched between the lid and strainer pot.

   Note: Ensure that the side of the lid marked “Front” is positioned at the front of the pump.
9. Open the filter air relief valve and stand clear of the filter.
10. Reestablish electrical power to the pump at the circuit breaker and start the pump.
11. When a steady stream of water flows from the filter air relief valve, close the valve.

WARNING **THIS SYSTEM OPERATES UNDER HIGH PRESSURE**. When any part of the circulating system is serviced, air can enter the system and become pressurized. Pressurized air can cause the lid to separate which can result in serious injury, death, or property damage. To avoid this potential hazard, follow above instructions.

Winterizing

You are responsible for determining when freezing conditions may occur. If freezing conditions are expected, take the following steps to reduce the risk of freeze damage. ***Freeze damage is not covered under warranty.***

In mild climate areas, when temporary freezing conditions may occur, run your filtering equipment all night to prevent freezing.

TO PREVENT FREEZE DAMAGE:

1. Press the **Start/Stop** button to stop the pump.
2. Disconnect all power to the pump at the circuit breaker.
3. Relieve all pressure from the filtration system at the filter air relief valve.
4. Remove both drain plugs from the bottom of the strainer pot and drain the pump. Store the plugs in the strainer basket.
5. Cover the motor to protect it from severe rain, snow and ice.

   Note: Do not wrap motor with plastic or other air tight materials during winter storage. Never cover the motor when operating or expecting operation.

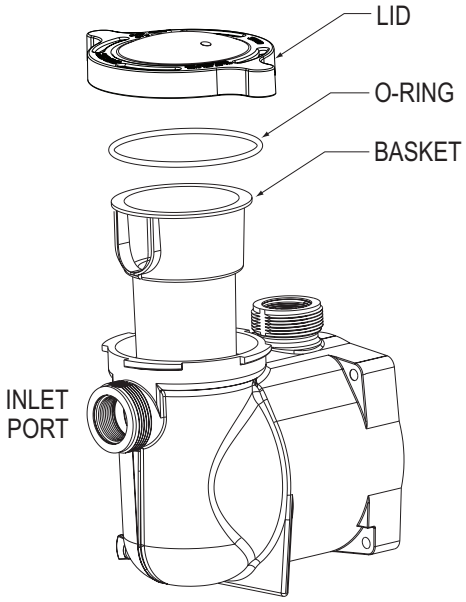

Strainer Pot Assembly

SERVICING

⚠WARNING Always disconnect power to the pump at the circuit breaker before servicing the pump. Failure to do so could result in death or serious injury to service people, users or others due to electric shock. Read all servicing instructions before servicing the pump.

⚠WARNING **DO NOT** open the strainer pot if pump fails to prime or if pump has been operating without water in the strainer pot. Pumps operated in these circumstances may experience a build up of vapor pressure and may contain scalding hot water. Opening the pump may cause serious personal injury. In order to avoid the possibility of personal injury, make sure the suction and discharge valves are open and strainer pot temperature is cool to touch, then open with extreme caution.

Motor Care

Protect from heat

1. Shade the motor from the sun.
2. Any enclosure must be well ventilated to prevent overheating.
3. Provide ample cross ventilation.

Protect against dirt

1. Protect from any foreign matter.
2. Do not store (or spill) chemicals on or near the motor.
3. Avoid sweeping or stirring up dust near the motor while it is operating.
4. If the motor has been damaged by dirt it may void the motor warranty.
5. Clean the lid, O-Ring, and sealing surface of the strainer pot regularly.

Protect against moisture

1. Protect from splashing or sprayed water.
2. Protect from extreme weather.
3. If motor internals have become wet - let them dry before operating. Do not allow the pump to operate if it has been flooded.
4. If the motor has been damaged by water it may void the motor warranty.

Pump Disassembly

TOOLS REQUIRED:

- 1/4" socket or open-end wrench
- 3/8" socket or open-end wrench
- 9/16" open-end wrench
- 1/4" hex key
- Flat blade screwdriver

TO DISASSEMBLE THE PUMP:

1. Press **Start/Stop** to stop the pump and disconnect all power to the pump at the circuit breaker.
2. Disconnect any digital inputs or communication cables from the pump (if connected).
3. Close all valves in suction and discharge pipes and relieve all pressure from the system.
4. Remove both drain plugs from the bottom of the strainer pot.
5. Using a 9/16" wrench, remove the four (4) bolts and washers securing the strainer pot to the motor assembly.
6. GENTLY separate the pump halves.
7. Remove the three (3) screws securing the diffuser to the seal plate.
8. While holding the motor shaft in place at the rear of the motor, remove the impeller screw.

   Note: The impeller screw is reverse thread and loosens clockwise.
9. Continue to hold the motor shaft in place and unthread the impeller counter-clockwise.
10. Using a 9/16" wrench, remove the four (4) bolts securing the seal plate to the motor.
11. If replacing the shaft seal, continue to *Shaft Seal Replacement* on page 16.

    Otherwise, continue to *Pump Reassembly* when necessary.

- ILLUSTRATED PARTS VIEW ON THE NEXT PAGE -

Shaft Seal Replacement

The Shaft Seal consists of two halves, a rotating spring seal and a fixed ceramic seal. The shaft seal may occasionally become damaged and require replacement.

⚠CAUTION Scratching, marring or otherwise damaging the polished shaft seal faces will cause the seal to leak. Always handle the shaft seal faces with care and clean them thoroughly before reassembling the pump.

1. Ensure you have completed all pump disassembly instructions on the previous page.
2. Remove the old Spring Seal from the impeller shaft with a pair of pliers.

   Note: When removing the spring seal the inner sleeve of the seal may stick to the shaft. Ensure it is removed before installing the new spring seal.
3. Place the seal plate face down on a flat surface and tap out the old ceramic seal with a flat-blade screwdriver.
4. Flip the seal plate over and thoroughly clean the seal cavity.
5. Lightly lubricate the outside rubber surface of the new ceramic seal with a silicone lubricant.
6. **With the White Face upwards**, firmly press the ceramic seal into the seal plate cavity with your thumbs.
7. Thoroughly clean the seal face with a clean cloth.
8. Using a 9/16" wrench, secure the seal plate to the motor with the four (4) motor bolts. Tighten to 75-80 in-lbs. (86-92 kg/cm).
9. **With the Flat Face towards the impeller,** slide the new spring seal onto the impeller shaft.
10. Thoroughly clean the seal face with a clean cloth
11. Hold the motor shaft in place at the rear of the motor and hand tighten the impeller clockwise onto the motor shaft.
12. Continue reassembling the pump according to the instructions given in *Pump Reassembly*.

Pump Reassembly

1. Place the seal plate onto the motor assembly, ensuring the side marked “UP” is at the top.
2. Using a 9/16" wrench, secure the seal plate to the motor with the four (4) motor bolts. Tighten to 75-80 in-lbs. (86-92 kg/cm).
3. Hold the motor shaft in place at the rear of the motor and hand tighten the impeller clockwise onto the motor shaft.
4. Continue to hold the motor shaft in place and reinstall the impeller screw.

   Note: The impeller screw is reverse thread and tightens counter-clockwise.
5. Secure the diffuser to the seal plate using the three (3) diffuser screws.
6. Inspect the diffuser seal and seal plate O-ring for damage and replace if necessary. Grease both before continuing.
7. Using a 9/16" wrench, secure the strainer pot to the motor assembly with the four (4) washers and bolts.

   Note: Ensure the seal plate O-ring is not pinched between the two pump halves.
8. Reinstall the both drain plugs into the bottom of the strainer pot.
9. To restart the pump, continue to *Restarting the Pump* on the next page.

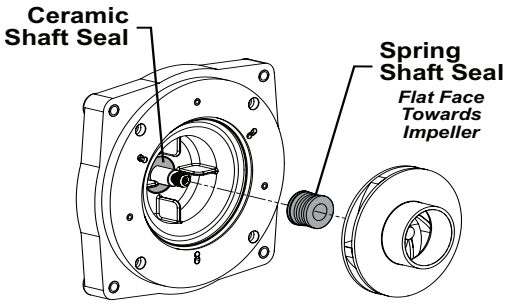

Shaft Seal Replacement

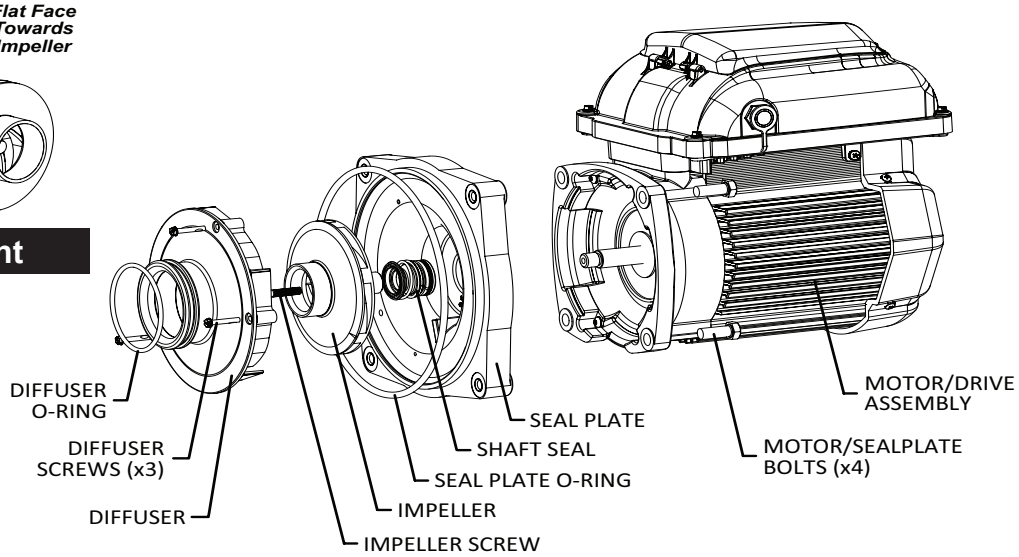

Motor Assembly Breakdown

Restarting the Pump

If pump is installed below the water level of the pool, close return and suction lines prior to opening the strainer pot on pump. Make sure to re-open valves prior to operating.

⚠CAUTION **DO NOT run the pump dry**, the shaft seal will be damaged and the pump will leak. If this occurs, the damaged seal must be replaced. ALWAYS maintain proper water level in your pool (half way up skimmer opening). If the water level falls below the skimmer opening, the pump will draw air through the skimmer, losing the prime and causing the pump to run dry, resulting in a damaged seal. Continued operation in this manner could cause a loss of pressure, resulting in damage to the pump body, impeller and seal and may cause property and personal injury.

TO PRIME THE PUMP:

1. Press **Start/Stop** to stop the pump and disconnect all power to the pump at the circuit breaker.
2. Relieve all pressure from the filtration system at the filter air relief valve.
3. Remove the strainer pot lid by twisting it in a counter-clockwise direction.
4. Fill the strainer pot up to the inlet port with water.
5. Place the lid onto the strainer pot, then turn clockwise to lock in place.
   Note: The lid is properly locked when the handles are nearly perpendicular to the pump body.
6. Return power to the pump at the circuit breaker.
7. Open the filter air relief valve.
8. Stand clear of the filter and press the **Start/Stop** button to start the pump.
9. Bleed air from the filter air relief valve until a steady stream of water appears, then close the relief valve.
10. The pump will run a priming cycle and, if successful, begin normal operation.

TROUBLESHOOTING

⚠WARNING Diagnosing certain symptoms may require interaction with, or close proximity to, components that are energized with electricity. All servicing should be performed by a qualified service professional. Contact with electricity can cause death, personal injury, or property damage.

Troubleshooting Chart

Problem	Possible Cause	Corrective Action
Pump failure.	Pump will not prime - Air in suction line or pump	1. Inspect suction line plumbing and valve(s) for damage or loose connections. 2. Ensure the strainer pot lid is sealing properly. Verify lid o-ring is in place. 3. Ensure proper pool water level and water is available to the skimmer.
	Pump will not prime - Not enough water	1. Ensure suction line and pump strainer pot are full of water. 2. Ensure suction line valve is working and open (some systems do not have valves). 3. Ensure proper pool water level and water is available to the skimmer.
	Strainer basket excessively dirty or full	Clean strainer basket. See *Cleaning the Pump Strainer Basket, page 14*.
	Strainer pot O-ring is damaged	Inspect strainer pot o-ring for damage. Replace if necessary.
Reduced capacity and/or head.	Air in suction line or pump	1. Inspect suction line plumbing and valve(s) for damage or loose connections. 2. Ensure the strainer pot lid is sealing properly. Verify lid o-ring is in place. 3. Ensure proper pool water level and water is available to the skimmer.
	Clogged impeller	Disassemble pump (*Pump Disassembly, page 15*) and remove debris from impeller.
	Strainer basket excessively dirty or full	Clean strainer basket. See *Cleaning the Pump Strainer Basket, page 14*.
Pump fails to start.	Mains voltage is not present	1. Replace fuse, reset breaker/GFCI. 2. Tighten mains wire connections.
	Motor is locked	Disassemble pump (*Pump Disassembly, page 15*) and attempt to rotate motor shaft by hand to remove any blockage.
	Motor shaft is damaged	Replace pump.
Pump runs then stops.	Over temperature FAULT	Ensure motor fan cover at the rear of the motor is free of dirt and debris. Use compressed air to clean.
	Over current FAULT	Pump will automatically restart after one (1) minute.
Pump is noisy.	Debris in contact with fan	Ensure motor fan cover at the rear of the motor is free of dirt and debris. Use compressed air to clean.
	Strainer basket excessively dirty or full	Clean strainer basket. See *Cleaning the Pump Strainer Basket, page 14*.
	Loose mounting	Ensure mounting bolts and pump bolts are tight.

Troubleshooting Chart (cont.)

Problem	Possible Cause	Corrective Action
Pump runs without flow.	Impeller is loose	Ensure fan at the rear of pump is spinning. If so, disassemble pump (*Pump Disassembly, page 15*) and ensure impeller is correctly installed.
	Air in suction line or pump	1. Inspect suction line plumbing and valve(s) for damage or loose connections. 2. Ensure the strainer pot lid is sealing properly. Verify lid o-ring is in place. 3. Ensure proper pool water level and water is available to the skimmer.
	Clogged or restricted plumbing	1. Inspect for and clear any blockage in strainer pot or suction line. 2. Inspect for blockage in discharge piping including partially closed valve or dirty pool filter.

Alarms and Fault Codes

If an alarm is triggered the drive will display a fault code text and the pump will stop running. Disconnect power to the pump and wait until the keypad LEDs have all turned off, then reconnect power. If the error continues to appear after power is reconnected, proper troubleshooting will be required. Use the error description table below to begin troubleshooting.

Fault Code	Description
21	Communication link between HMI and motor control has been lost
1A	Power Module over current detected
17	Phase Current Offset out of range
16	Phase Current Imbalance detected
0F	Absolute AC under voltage detected
02	Absolute Phase current limit exceeded
08	Absolute Diode Bridge temperature limit exceeded
04	Absolute Power Module temperature limit exceeded
06	Absolute Power Factor Correction (PFC) temperature limit exceeded
09	DC bus over voltage detected
0A	DC bus under voltage detected
19	Motor start failure
0b	AC Voltage maximum exceeded

21 – **Communication Link between the HMI and Motor Control has been lost**: Remove the top cover from the drive and inspect the jacketed wire on the backside of the keypad. Ensure that the 5-pin connector is properly plugged into the socket and that there is no damage to the cable.

02 – **Power Module Over Current Detected**: If this error displays multiple times, then there may be a problem with the pump's rotating assembly. Disassemble the pump (see *Pump Disassembly* on page 15) and inspect the impeller and shaft seal for problems.

0F – **Absolute AC Under Voltage Detected**: Indicates that the supply voltage has dropped below the operating range of 99v. This could be caused by normal voltage variation and will clear itself. Otherwise there could be excess voltage drops caused by improper installation or improper supply voltage.

19 – **Motor Start Failure**: Could indicate a locked rotor. Verify the fan at the rear of the motor is free of debris. Attempt to break up impeller blockages by rotating the motor shaft through the fan cover using a hex-key. If this does not work the pump may need to be disassembled (see *Pump Disassembly* on page 15).

0b – **AC Voltage Maximum Exceeded**: Indicates that the supply voltage is exceeding the operating range of 251v.

1A,17,16, 02, 08, 04, 06, 09, 0A – **Internal Errors:** These errors can occur based on operating conditions and the required self-diagnostic safety software. If they do not clear after multiple restart attempts the drive should undergo a hard power cycle. Disconnect power at the circuit breaker long enough for the keypad LEDs to turn off. If the error continues to appear after power is reconnected, the drive may need service.

REPLACEMENT PARTS

Pumps Manufactured AFTER 11/02/20

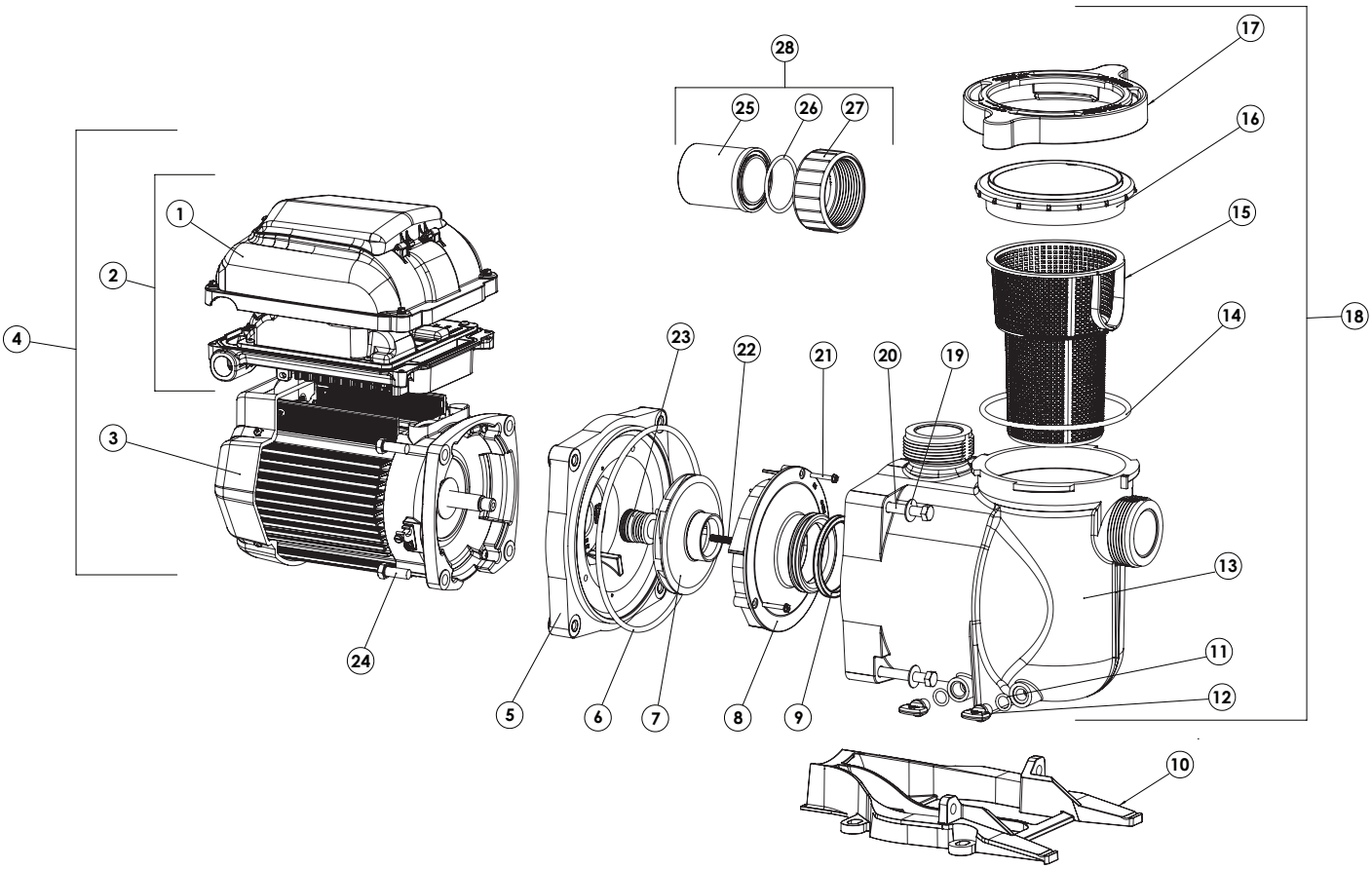

Item	Description	Part No.	
		Almond	Black
1	Drive Cover	356278	-
	Drive Cover (RS-485)	356279	356280
2	Drive Kit	356281	-
	Drive Kit (RS-485)	356282	356283
3	Motor	356286S	356287S
4	Motor/Drive Assembly	356288S	-
	Motor/Drive Assembly (RS-485)	356289S	356290S
5	Sealplate	356071	356072
6	Sealplate Gasket	355619	
7	Impeller	C105-238PDCA	
8	Diffuser	355949	
9	Diffuser Seal	355331	
10	Base	350094	351094
11	Drain Plug (Qty. 2)	071131	357161
12	Drain Plug O-ring (Qty. 2)	192115	
13	Strainer Pot	350089	351089
14	Lid O-ring	357255	
15	Strainer Basket	355667	

Item	Description	Part No.	
		Almond	Black
16	Lid	350091	
17	Locking Ring	350090	351090
18	Strainer Pot Assembly (includes items 11-17)	353010	353110
19	Washer, 3/8” SS (Qty. 4)	072184	
20	Bolt, Hex, 3/8-16 x 2-1/4 (Qty. 4)	355621	
21	Diffuser Screw (Qty. 3)	355334	
22	Impeller Screw	355389	
23	Shaft Seal	17351-0101S	
24	Bolt, Hex, 3/8-16 (Qty. 4)	354290	
25	Union Adapter (Qty. 2)	350093	
26	Union Adapter O-ring (Qty. 2)	6020018	
27	Union Nut (Qty. 2)	350092	270141
28	Union Kit (includes items 25-27) (Qty. 2)	351157	
-	RS-485 Automation Wiring Kit, Black, 25 ft.	356324Z	
-	Motor Fan Guard Kit, TEFC/Super-Duty	357923Z	357924Z

(-) Not shown

Pumps Manufactured BEFORE 11/02/20

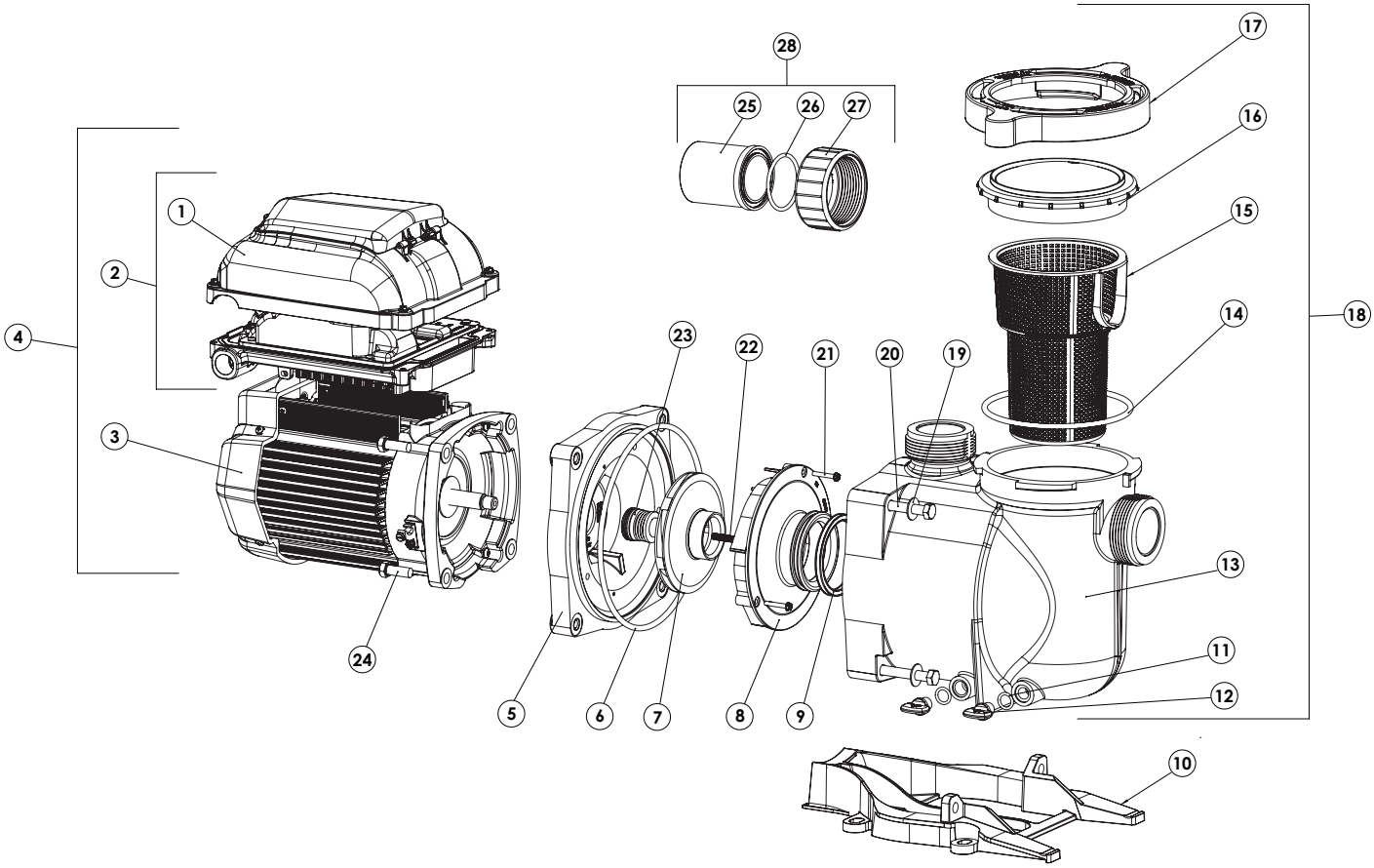

Item	Description	Part No.	
		Almond	Black
1	Drive Cover	353123	353124
2	Drive Kit	353127	353128
3	Motor	353134S	353135S
4	Motor/Drive Assembly	353132S	353133S
5	Sealplate (Mfg. before 6/17/19)	356012	355612
	Sealplate (Mfg. after 6/17/19)	356071	356072
6	Sealplate Gasket	355619	
7	Impeller (Mfg. before 6/17/19)	355074	
	Impeller (Mfg. after 6/17/19)	C105-238PDCA	
8	Diffuser (Mfg. before 6/17/19)	355618	
	Diffuser (Mfg. after 6/17/19)	355949	
9	Diffuser Seal (Mfg. before 6/17/19)	355030	
	Diffuser Seal (Mfg. after 6/17/19)	355331	
10	Base	350094	351094
11	Drain Plug (Qty. 2)	071131	357161
12	Drain Plug O-ring (Qty. 2)	192115	
13	Strainer Pot	350089	351089
14	Lid O-ring	357255	
15	Strainer Basket	355667	

Item	Description	Part No.	
		Almond	Black
16	Lid	350091	
17	Locking Ring	350090	351090
18	Strainer Pot Assembly (includes items 11-17)	353010	353110
19	Washer, 3/8” SS (Qty. 4)	072184	
20	Bolt, Hex, 3/8-16 x 2-1/4 (Qty. 4)	355621	
21	Diffuser Screw (Qty. 3)	355334	
22	Impeller Screw	355389	
23	Shaft Seal (Mfg. before 6/17/19)	354545S	
	Shaft Seal (Mfg. after 6/17/19)	17351-0101S	
24	Bolt, Hex, 3/8-16 (Qty. 4)	354290	
25	Union Adapter (Qty. 2)	350093	
26	Union Adapter O-ring (Qty. 2)	6020018	
27	Union Nut (Qty. 2)	350092	270141
28	Union Kit (includes items 25-27) (Qty. 2)	350157	351157
-	Digital Input Wiring Kit, Almond, 25 ft.	353129Z	
-	Motor Fan Guard Kit, TEFC/Super-Duty	357923Z	357924Z

(-) Not shown

TECHNICAL DATA

Performance Curves

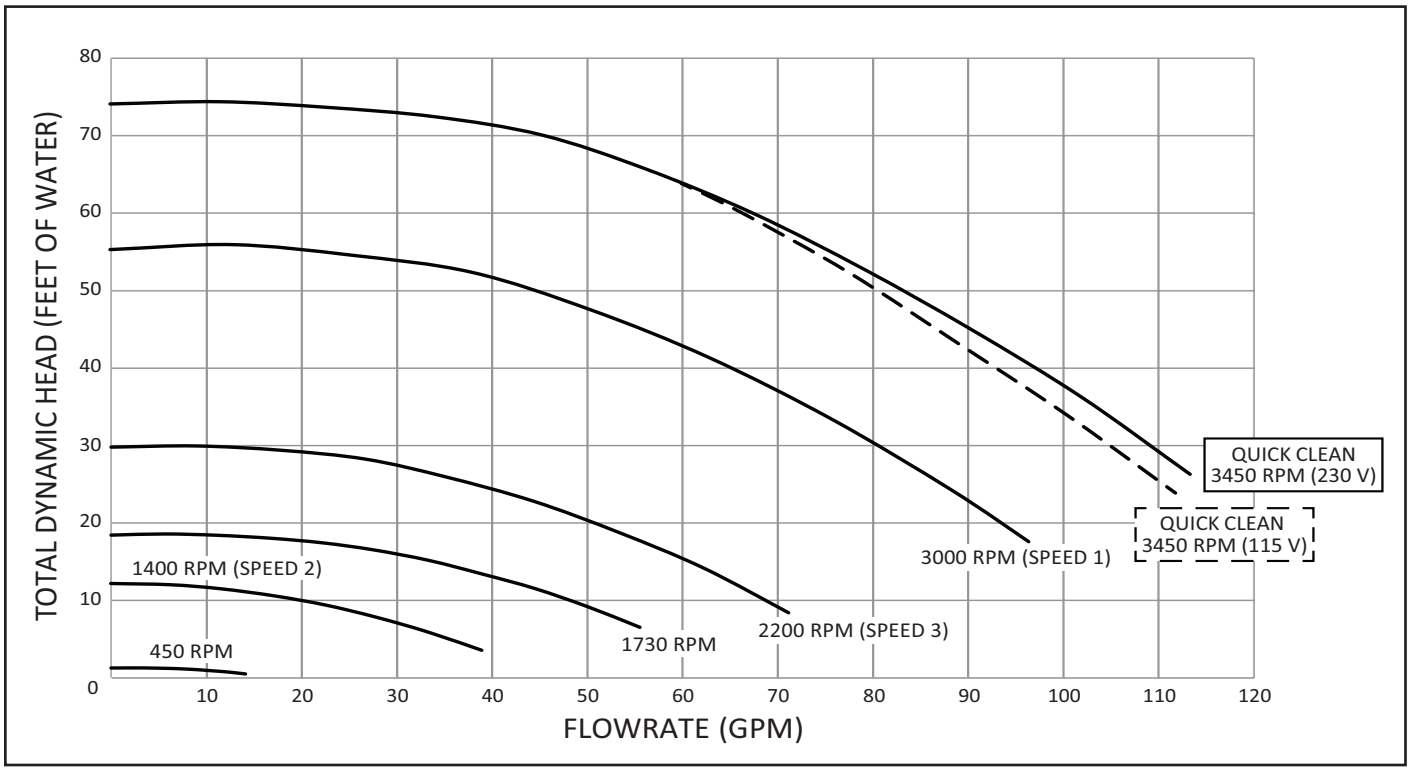

Specifications and Dimensions

Overall Ratings	
Input Voltage	115-230 Vrms nominal
Input Current	13.6/8.2-7.1 A
Input Frequency	Single phase, 50 or 60 Hz
Control Terminals	18-30V AC (24V AC +/-20%) or 9-30V DC (12/24V DC +/-20%)
Maximum Continuous Load	WEF 9.0 THP: 2.2
Speed Range	450 - 3450 RPM
Environmental Rating	NEMA Type 3
Ambient Conditions	
Storage	-40ºC to +85ºC (-40ºF to +185°F)
Operating	0ºC to +50ºC (+32°F to +122°F)
Humidity	Relative 0 to 95 % non-condensing

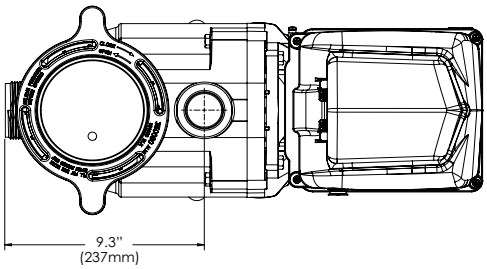

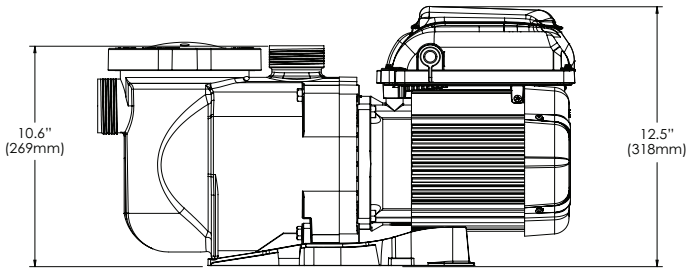

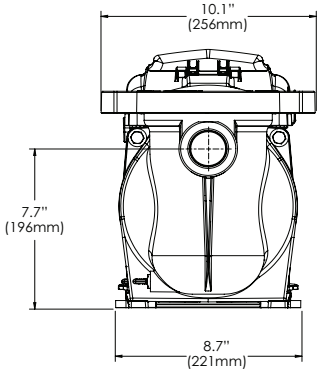

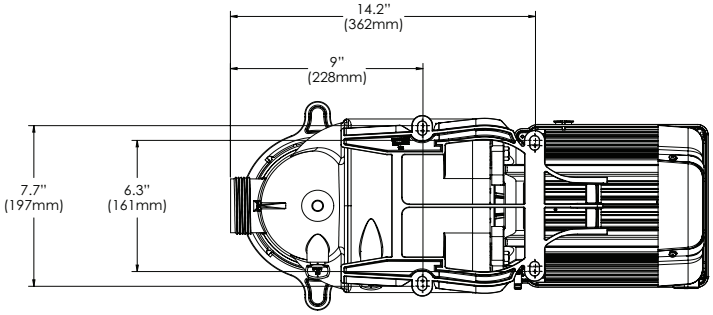

NOTES

1620 HAWKINS AVE., SANFORD, NC 27330 • (919) 566-8000
10951 WEST LOS ANGELES AVE., MOORPARK, CA 93021 • (805) 553-5000

WWW.PENTAIR.COM

All indicated Pentair trademarks and logos are property of Pentair. Third party registered and unregistered trademarks and logos are the property of their respective owners. Because we are continuously improving our products and services, Pentair reserves the right to change specifications without prior notice. Pentair is an equal opportunity employer.

© 2023 Pentair. All rights reserved. This document is subject to change without notice.

P/N 356292 REV. C 7/31/23