PENTAIR POOL

WHITE GOODS

Updated June 2025

ADMIRAL™ S15 AND S20 SKIMMERS

ADMIRAL SKIMMERS FOR POOLS AND SPAS

Admiral Skimmers

Admiral Skimmer Accessories

Featured Highlights

- Admiral 15 Skimmers: High strength ABS body
- Admiral S20 Skimmers: Reinforced PVC base
- Slip FIPT, 1-1/2 inch or 2 inch
- Easy to install
- Innovative lock down lid
- 1-1/2 inch and 2 inch ports
- Lid extension collars
- Flap weir or the circular weir

Admiral S15 Skimmers offer a variety of bases for a wide range of plumbing and construction requirements, configurations and materials. S15 Skimmers are injection molded of high strength ABS and are available with a flap weir for skimming action.

Admiral S20 Skimmers have a PVC reinforced twin port base. S20 may be purchased with equalizer for commercial and NSF applications or for when the second port is connected to the main drain. All models include the innovative lock down lid and are available with a flap weir or the circular weir for greater skimming action.

Ordering Information

Product	Description	Carton Qty.	Carton Wt. (Lbs.)
	S15 SKIMMERS FOR CONCRETE CONSTRUCTION		
84120200	S15, circ. weir, 2 in., threaded	1	10
	S20 SKIMMERS FOR CONCRETE CONSTRUCTION		
84420405	S20, flap weir, no equalizer, 1-1/2 in. slip	1	10
84420505	S20, circ. weir, equalizer, 2 in. slip [1]	1	12
84420605	S20, flap weir, equalizer, 2 in. slip [1]	1	12
84420805	S20, flap weir, no equalizer, 2 in. slip	1	10
	ADMIRAL SKIMMER ACCESSORIES		
506162Z	Equalizer check valve	1	0.25
85018000	Lid with ring seat, S15 & S20, 9 in. beige	1	1
85002300	Extension collar for ring seat, adjustable to 3 in.	1	0.50
85001900	Vacuum plate adapter, S15 & S20	1	0.50
85007400Z	Lock down lid for existing Admiral skimmers, white	1	0.50
85007411	Lock down lid for existing Admiral skimmers, black	1	0.50
85007413	Lock down lid for existing Admiral skimmers, gray	1	0.50
85007430	Lock down lid for existing Admiral skimmers, tan	1	0.50
85000400	Lid/collar set, white	1	0.50

[1] NSF certified for commercial installation. Check valve 506162Z must be purchased separately.

Dimensions and Performance

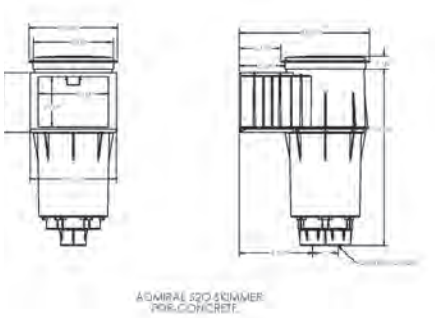

Certified to NSF/ANSI Standard 50

CALIFORNIA PROPOSITION 65 WARNING

WARNING: Cancer and Reproductive Harm.
AVERTISSEMENT: Peut Causer le Cancer et des Dommages au Système Reproducteur.
ADVERTENCIA: Cáncer y Daño Reproductivo.
www.p65warnings.ca.gov.

SEE PAGE 515 FOR REPLACEMENT PARTS

BERMUDA™ SKIMMERS

SKIMMERS FOR GUNITE POOLS, VINYL LINER, AND FIBERGLASS POOLS

Featured Highlights

Choose among the following configurations:

- ABS or PVC
- White, black, and tan colors available
- 1-1/2 in. or 2 in. slip or threaded ports
- Optional equalizer valve

Bermuda Skimmers feature a heavy-duty one-piece construction with sturdy external ribbing for superior strength. All Bermuda Skimmers for vinyl liner and fiberglass pools are made from ABS plastic.

Gunite Skimmer

CALIFORNIA PROPOSITION 65 WARNING

⚠ **WARNING:** Cancer and Reproductive Harm.
⚠ **AVERTISSEMENT:** Peut Causer le Cancer et des Dommages au Système Reproducteur.
⚠ **ADVERTENCIA:** Cáncer y Daño Reproductivo.
www.p65warnings.ca.gov.

Ordering Information

Product	Description	Material Type	Carton Qty.	Carton Wt. (Lbs.)
GUNITE SKIMMERS				
506300	2 in. Slip ports, white	PVC	1	10
506302	2 in. Slip ports, tan	PVC	1	10
506361	2 in. Slip ports, white	ABS	1	10
506365	2 in. Slip ports, black	ABS	1	10
GUNITE SKIMMERS WITH FLOAT VALVE ASSEMBLY				
506382	2 in. Slip ports, tan	ABS	1	10
506308	2 in. Slip ports with float valve, white	PVC	1	10
GUNITE SKIMMERS WITH FLOAT VALVE & EQUALIZER VALVE ASSEMBLY				
506370	2 in. slip ports, white [1] (BKG)	PVC	1	10

[1] NSF certified.

Dimensions and Performance

Gunite Skimmer

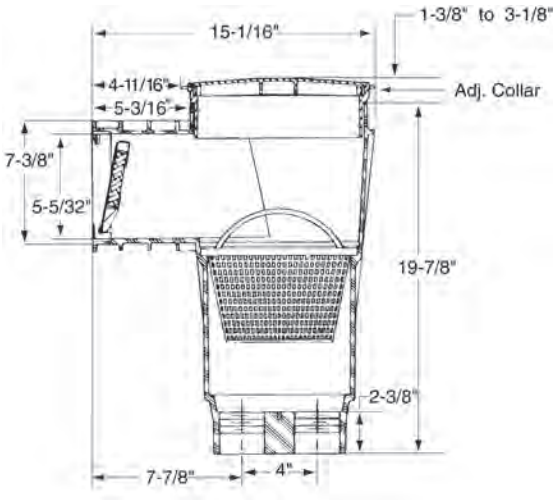

SEE PAGE 515 FOR REPLACEMENT PARTS

BERMUDA™ SKIMMERS (CONT'D)

A

B

F

E

CALIFORNIA PROPOSITION 65 WARNING

⚠ **WARNING:** Cancer and Reproductive Harm.
⚠ **AVERTISSEMENT:** Peut Causer le Cancer et des Dommages au Système Reproducteur.
⚠ **ADVERTENCIA:** Cáncer y Daño Reproductivo.
www.p65warnings.ca.gov.

Ordering Information

Item	Product	Description	Carton Wt. (Lbs.)
		BERMUDA ACCESSORIES	
A	506160Z	Float valve assembly	1
B	506161	Vacuum plate/insert assembly, white	0.50
C	506162Z	Equalizer valve assembly	1.3
E	516253	Gunite extension collar, white, 3-1/8 in. length	0.20
E	516258Z	Gunite extension collar, tan, 3-1/8 in. length	0.60
E	516329Z	Gunite extension collar, black, 3-1/8 in. length	0.60
F	510327	Deck lid and collar assembly with screws, dark gray	1.3
F	510332Z	Deck lid, dark gray	0.50
F	516215	Deck lid, white	0.50
F	516216	Deck lid, tan	0.50
F	516254Z	Deck lid and collar assembly with screws, white	1.3
F	516261Z	Deck lid and collar assembly with screws, tan	1.3
F	516306Z	Deck lid, black	0.50
F	516328Z	Deck lid and collar assembly with screws, black	1.3

SEE PAGE 515 FOR REPLACEMENT PARTS

U-3 SKIMMERS

SWIMQUIP INGROUND SKIMMERS

STA-RITE

Ordering Information

Product	Description	Carton Qty.	Carton Wt. (Lbs.)
SKIMMERS FOR CONCRETE POOLS			
08650-1403	U-3 Skimmer White w/ White Lid & Frame, 2 in. NPT with 1-1/2 in. NPT Reducers; Incl. Float and Check Valve, Basket [1]	48	10
08650-1404	U-3 Skimmer White w/ White Lid & Frame, 2 in. Slip with 1-1/2 in. Slip Reducers; Incl. Float and Check Valve, Basket [1]	48	10
08650-3404	U-3 Skimmer Gray w/ Gray Lid & Frame, 2 in. Slip with 1-1/2 in. Slip Reducers; Incl. Float and Check Valve, Basket; NSF [1]	48	10
08650-2404	U-3 Skimmer White w/ Tan Lid & Frame, 2 in. Slip with 1-1/2 in. Slip Reducers; Incl. Float and Check Valve, Basket [1]	48	10
08650-4404	U-3 Skimmer White w/ White Lid & Frame, 2 in. Slip with 1-1/2 in. Slip Reducers; Incl. Basket w/o float	48	9
08650-6404	U-3 Skimmer Gray w/ Gray Lid & Frame, 2 in. Slip with 1-1/2 in. Slip Reducers; Incl. Basket w/o float	48	9
08650-5404	U-3 Skimmer White w/ Tan Lid & Frame, 2 in. Slip with 1-1/2 in. Slip Reducers; Incl. Basket w/o float	48	9

[1] NSF certified. Only skimmers with Float Valve assemblies are NSF certified.

Note: All U-3 Skimmers are made with high strength ABS plastic.

Dimensions and Performance

U3 Skimmer for concrete

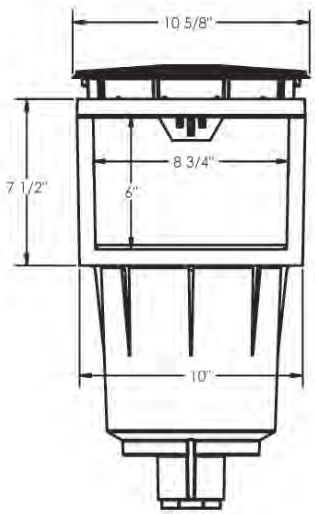

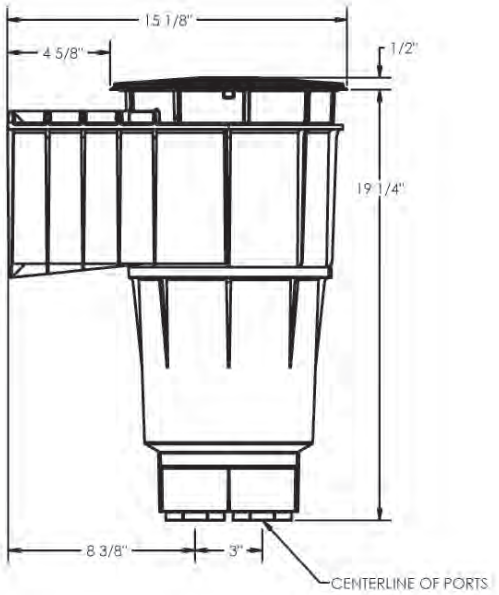

CALIFORNIA PROPOSITION 65 WARNING

⚠ **WARNING:** Cancer and Reproductive Harm.
⚠ **AVERTISSEMENT:** Peut Causer le Cancer et des Dommages au Système Reproducteur.
⚠ **ADVERTENCIA:** Cáncer y Daño Reproductivo.

www.p65warnings.ca.gov. P/N 200174-A

SEE PAGE 515 FOR REPLACEMENT PARTS

QUIKSKIM VENTURI POWERED

COMPLETE SKIMMERS

QuikSkim Black Body, Black Ring Lid, w/ Foam

Optional Bonding Lug

Featured Highlights

- Natural water pressure creates a strong vacuum to clear more debris
- Uses existing return water to create stronger skimming action
- Optimizes energy usage
- Durable housing is available in multiple colors
- Available for concrete, vinyl, and fiberglass pools

CALIFORNIA PROPOSITION 65 WARNING

WARNING: Cancer and Reproductive Harm.
AVERTISSEMENT: Peut Causer le Cancer et des Dommages au Système Reproducteur.
ADVERTENCIA: Cáncer y Daño Reproductivo.
www.p65warnings.ca.gov. P/N 200174 A

Through venturi-powered skimming, natural water pressure from the pool creates a strong vacuum to clear debris, while reducing the need for pump suction. Not only is the process efficient, it also provides effective surface skimming.

Ordering Information

Pentair Item #	With Lug	Product Name & Description
QUIKSKIM COMPLETE WITH PROTECTA FOAM		
505107	504107	QuikSkim White Body, Tan Ring Lid, w/ Foam
505101	504101	QuikSkim White Body, White Ring Lid, w/ Foam
505102	504102	QuikSkim White Body, Gray Ring Lid, w/ Foam
505307	504307	QuikSkim Gray Body, Tan Ring Lid, w/ Foam
505301	504301	QuikSkim Gray Body, White Ring Lid, w/ Foam
505302	504302	QuikSkim Gray Body, Gray Ring Lid, w/ Foam
QUIKSKIM COMPLETE WITH PROTECTA NO LID OR RING		
505110	504110	QS w/ Protecta, White Body, No Lid or Ring
505310	504310	QS w/ Protecta, Gray Body, No Lid or Ring
QUIKSKIM VINYL		
501123	–	QuikSkim Vinyl White Body, Dark Gray Ring Lid
QUIKSKIM FIBERGLASS		
517337	–	QS Fiberglass Dark Gray Body, Tan Ring Lid
517333	–	QS Fiberglass Dark Gray Body, Dark Gray Ring Lid
510137	–	QS Fiberglass White Body, Tan Ring Lid
501131	–	QS Fiberglass White Body, White Ring Lid
518303	–	QS Fiberglass Square Frame Dark Gray
518007	–	QS Fiberglass Square Frame Tan
518101	–	QS Fiberglass Square Frame White

SEE PAGE 515 FOR REPLACEMENT PARTS

REPLACEMENT SKIMMER LIDS WITH AND WITHOUT THERMOMETERS

Featured Highlights

- Lids are available in three colors to blend with the pool environment
- Available to fit Pentair Aquatic Systems and other popular skimmer brands

Skimmer Lids with Thermometers

CALIFORNIA PROPOSITION 65 WARNING

⚠ **WARNING:** Cancer and Reproductive Harm.
⚠ **AVERTISSEMENT:** Peut Causer le Cancer et des Dommages au Système Reproducteur.
⚠ **ADVERTENCIA:** Cáncer y Daño Reproductivo.
www.p65warnings.ca.gov. P/N 20174.A

Skimmer thermometers can reduce misplacement and breakage problems sometimes seen with floating thermometers. The hermetically sealed face is built for strength and weather resistance. The outside temperature will not affect the performance of the thermometer.

Ordering Information

Product	Description	Carton Qty.	Carton Wt. (Lbs.)
	SKIMMER LIDS WITH THERMOMETER		
L1	SwimQuip, Swimrite, Jacuzzi® (New Style), Hayward®, 9-7/8 in., white	1	3/4
L1B	SwimQuip, Swimrite, Jacuzzi (New Style), Hayward, 9-7/8 in., almond	1	3/4
L4W	Pentair Aquatic Systems, 9-3/16 in. round, white	1	3/4
L6W	Pentair Aquatic Systems, Bermuda, 9-1/4 in., white	1	3/4
	SKIMMER LIDS WITHOUT THERMOMETER		
L1RW	SwimQuip, Swimrite, Jacuzzi, Hayward (New Style), 9-7/8 in., white	1	3/4
L2R	Baker, Hydro, 9-7/8 in., white	1	3/4
L4RW	American Products, 9-3/16 in. round, white	1	3/4
L5R	Pentair Aquatic Systems (Old Style), 8-3/8 in., white	1	3/4

Jacuzzi® is a registered trademark of Jacuzzi, Inc.; Hayward® is a registered trademark of Hayward Industries, Inc.; Baker Hydro® is a registered trademark of Waterco USA DBA Baker Hydro Corp.

SEE PAGE 515 FOR REPLACEMENT PARTS

GUTTER DRAINS

DRAINS AND FITTINGS

540064

542038

542039

Featured Highlights

Pentair gutter drains come with an extra deep socket connection

CALIFORNIA PROPOSITION 65 WARNING

WARNING: Cancer and Reproductive Harm.
AVERTISSEMENT: Peut Causer le Cancer et des Dommages au Système Reproducteur.
ADVERTENCIA: Cáncer y Daño Reproductivo.
www.p65warnings.ca.gov.

Ordering Information

Product	Description	Flow Rate (GPM)	Open Area (Sq. In.)	Carton Qty.
	GUTTER DRAINS			
540063	2 in. x 4 in. gutter drain & grate, white	14.5 @ 1-1/2 ft./sec.	3.09	50
540064	2 in. x 4 in. gutter drain & grate, black	14.5 @ 1-1/2 ft./sec.	3.09	50
540065	2 in. x 4 in. gutter drain & grate, dark gray	14.5 @ 1-1/2 ft./sec.	3.09	50
542038	2 in. x 4 in. 3-bar frame & grate, white	8.0 @ 1-1/2 ft./sec.	1.71	50
542039	2-1/2 in. x 6 in. gutter drain & grate, white	22.5 @ 1-1/2 ft./sec.	4.81	50
542146	2 in. x 4 in. grate (hi-style), white	14.5 @ 1-1/2 ft./sec.	3.09	50
552511	2 in. x 4 in. grate (fits 540063, 542037)	14.5 @ 1-1/2 ft./sec.	3.09	50

Dimensions and Performance

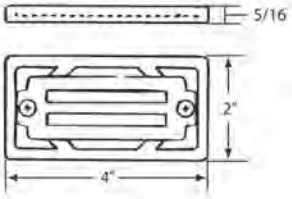

542038

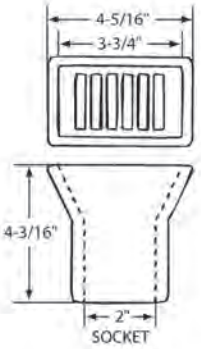

540064

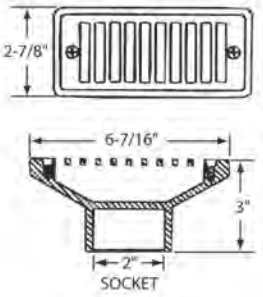

542039

SEE PAGE 515 FOR REPLACEMENT PARTS

STARGUARD® MAIN DRAINS

MAIN DRAIN FRAME AND GRATE

Featured Highlights

- Available in multiple colors
- Compliant with the Virginia Graeme Baker Pool and Spa Safety Act

CALIFORNIA PROPOSITION 65 WARNING

WARNING: Cancer and Reproductive Harm.
AVERTISSEMENT: Peut Causer le Cancer et des Dommages au Système Reproducteur.
ADVERTENCIA: Cáncer y Daño Reproductivo.
www.p65warnings.ca.gov. P/N 20174-A

StarGuard Main Drains comply with provisions of the ANSI/APSP/ICC-16 2017 standard and the Virginia Graeme Baker Pool and Spa Safety Act. High-quality StarGuard Main Drains are available in white, black, gray, and dark gray as well as a variety of configurations to fit most residential inground pool or spa installations. StarGuard main drains have 15.35 square inches of open area for water flow and allow flow rates up to 72 GPM at 1-1/2 ft./sec.

Ordering Information

Product	Description	Flow Rate Floor (GPM)	Flow Rate Wall (GPM)	Open Area (Sq. In.)
8 IN. STARGUARD COVER WITH LONG RING				
500108	8 in. StarGuard cover w/ long ring (single), white	136	88	15.35
500100	8 in. StarGuard cover w/ long ring (single), black	136	88	15.35
500101	8 in. StarGuard cover w/ long ring (single), dark gray	136	88	15.35
500102	8 in. StarGuard cover w/ long ring (single), gray	136	88	15.35
500140	8 in. StarGuard cover w/ long ring (2 pack), white	136	88	15.35
500141	8 in. StarGuard cover w/ long ring (2 pack), black	136	88	15.35
500142	8 in. StarGuard cover w/ long ring (2 pack), dark gray	136	88	15.35
500143	8 in. StarGuard cover w/ long ring (2 pack), gray	136	88	15.35
8 IN. STARGUARD COVER WITH SHORT RING AND COVER				
500103	8 in. StarGuard cover w/ short ring (single), white	136	88	15.35
500104	8 in. StarGuard cover w/ short ring (single), black	136	88	15.35
500105	8 in. StarGuard cover w/ short ring (single), dark gray	136	88	15.35
500106	8 in. StarGuard cover w/ short ring (single), gray	136	88	15.35
500144	8 in. StarGuard cover w/ short ring (2 pack), white	136	88	15.35
500145	8 in. StarGuard cover w/ short ring (2 pack), black	136	88	15.35
500146	8 in. StarGuard cover w/ short ring (2 pack), dark gray	136	88	15.35
500147	8 in. StarGuard cover w/ short ring (2 pack), gray	136	88	15.35
8 IN. STARGUARD DRAIN WITH 2 IN. SIDE AND 1-1/2 IN. BOTTOM PORTS ABS SUMP WITH RING AND COVER				
500110	8 in. StarGuard drain w/ 2 in. side & 1-1/2 in. bottom ports ABS sump w/ ring & cover (2 pack), white	136	88	15.35

SEE PAGE 515 FOR REPLACEMENT PARTS

STARGUARD® MAIN DRAINS (CONT'D)

Product	Description	Flow Rate Floor (GPM)	Flow Rate Wall (GPM)	Open Area (Sq. In.)
8 IN. STARGUARD DRAIN WITH 2 IN. SIDE PORT ABS SUMP WITH RING AND COVER				
500115	8 in. StarGuard drain w/ 2 in. side port ABS sump w/ ring & cover (2 pack), white	136	88	15.35
8 IN. STARGUARD DRAIN WITH DUAL 2 IN. BOTTOM PORTS ABS SUMP AND COVER				
500120	8 in. StarGuard drain w/ dual 2 in. bottom ports ABS sump & cover (2 pack), white	136	88	15.35
8 IN. STARGUARD DRAIN WITH 2 IN. SIDE AND 1-1/2 IN. BOTTOM VINYL LINER ABS SUMP				
500130	8 in. StarGuard drain w/ 2 in. side & 1-1/2 in. bottom vinyl liner ABS sump (2 pack), white	136	88	15.35

500108
8 in. StarGuard cover w/ long ring

500103
8 in. StarGuard cover w/ short ring

500110
8 in. StarGuard drain w/ 2 in. side & 1-1/2 in. bottom ports ABS sump w/ ring & cover

500115
8 in. StarGuard drain w/ 2 in. side port ABS sump w/ ring & cover

500120
8 in. StarGuard drain w/ dual 2 in. bottom ports ABS sump & cover

500130
8 in. StarGuard drain w/ 2 in. side & 1-1/2 in. bottom vinyl liner ABS sump

SEE PAGE 515 FOR REPLACEMENT PARTS

AVSC HEAVY DEBRIS REMOVAL DRAIN

COMPLETE DRAINS

Featured Highlights

- Available in single and dual-inlet models
- Easy installation, including construction cover
- For pools, spas, and water features
- Available with a pebble top lid

AVSC Single Standard Top Channel Drain White

AVSC Single Suction Pebble Top Drain White

AVSC Dual Standard Top Channel Drain White

AVSC Dual Suction Pebble Top Drain White

AVSC Vinyl Dual Suction White

The AVSC drain is a heavy debris removal drain in an unblockable package. The AVSC drain conforms to all current ANSI, NSF and VGB anti-entrapment standards, and boasts one of the highest flow rates of debris removal drains in the U.S. to date.

Available in a both dual or single port models (accepting both 2.5" and 3" pipe) the AVSC comes in a wide variety of colors. In addition, an optional fillable lid is available to allow the drain to seamlessly blend into the surrounding finish of the pool.

Ordering Information

Pentair Item #	Product Name & Description
	AVSC SINGLE SUCTION STANDARD TOP DRAIN
285001	AVSC Single Standard Top Channel Drain White
285003	AVSC Single Standard Top Channel Drain Dark Gray
285004	AVSC Single Standard Top Channel Drain Black
285002	AVSC Single Standard Top Channel Drain Light Gray

CALIFORNIA PROPOSITION 65 WARNING

⚠ **WARNING:** Cancer and Reproductive Harm.
⚠ **AVERTISSEMENT:** Peut Causer le Cancer et des Dommages au Système Reproducteur.
⚠ **ADVERTENCIA:** Cáncer y Daño Reproductivo.

www.p65warnings.ca.gov. P/N 200174-A

SEE PAGE 515 FOR REPLACEMENT PARTS

AVSC HEAVY DEBRIS REMOVAL DRAIN (CONT'D)

COMPLETE DRAINS

Pentair Item #	Product Name & Description
	AVSC DUAL SUCTION STANDARD TOP DRAIN
286101	AVSC Dual Standard Top Channel Drain White
286123	AVSC Dual Standard Top Channel Drain Dark Gray
286114	AVSC Dual Standard Top Channel Drain Black
286102	AVSC Dual Standard Top Channel Drain Light Gray
	AVSC SINGLE SUCTION PEBBLE TOP DRAIN
288101	AVSC Single Pebble Top Channel Drain White
288103	AVSC Single Pebble Top Channel Drain Dark Gray
288104	AVSC Single Pebble Top Channel Drain Black
288102	AVSC Single Pebble Top Channel Drain Light Gray
	AVSC DUAL SUCTION PEBBLE TOP DRAIN
289101	AVSC Dual Pebble Top Channel Drain White
289103	AVSC Dual Pebble Top Channel Drain Dark Gray
289104	AVSC Dual Pebble Top Channel Drain Black
289102	AVSC Dual Pebble Top Channel Drain Light Gray
	VINYL AVSC DUAL DRAIN
284161	AVSC Vinyl Dual White
284202	AVSC Vinyl Dual Light Gray

SEE PAGE 515 FOR REPLACEMENT PARTS

POOL SPECIALTY FITTINGS

Pentair plumbing unions are available in a wide variety of configurations. Specialty fittings such as the snap lock wall fitting, anchor cup, and rope hooks and the molded recessed steps are designed for ease of installation. Deck valve lid and ring allow for access to under deck valves and fittings. These fittings are manufactured to Pentair's high standards.

CALIFORNIA PROPOSITION 65 WARNING

WARNING: Cancer and Reproductive Harm.
AVERTISSEMENT: Peut Causer le Cancer et des Dommages au Système Reproducteur.
ADVERTENCIA: Cáncer y Daño Reproductivo.
www.p65warnings.ca.gov.

Ordering Information

Product	Description	Carton Qty.	Carton Wt. (Lbs.)
COMPLETE INSIDER WALL INLET FITTINGS FOR CONCRETE POOLS			
08429-0000	1-1/2 in. Slip, 3/16 in., 1/2 in., 3/4 in., 90° Nozzles, white	50	0.50
EYEBALL INSIDER INLET FITTINGS			
08434-0000	1-1/2 in. Slip, 1/2 in., 3/4 in., 90° Nozzles, white	50	0.50
ALL PURPOSE PLUGS			
195830	2 in. plug with O-ring	25	
JETS FOR CONCRETE INSTALLATION			
46540000	Venturi Jet, 5/16 in. nozzle, 1/2 in. socket air x 1-1/2 in. socket water, 1-1/2 in. socket return	40	20
FLOOR INLET FITTINGS			
08417-0000	2 in. Slip with 1-1/2 in. slip bushing, white [1]	50	1
SPECIAL FITTINGS			
46550000	Aerator Cap, 1-1/2 in. for air channel, white	20	13
86201500	Aerator inlet (used as a return spray nozzle)	10	1
GRATE INSERTS			
540057	Grate insert, 1-1/2 in. MIP, black [2]	50	2
STEPS			
82400700	ABS Steps, set of three, white	1	3

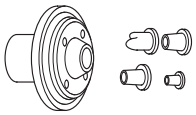

Wall Inlet Fittings

Eyeball Inlet Fittings

[1] Use only as a floor inlet fitting.

[2] Not for use as a suction fitting.

Vacuum Plug

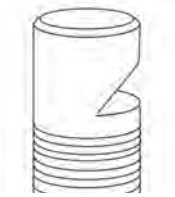

86201500

46540000

46550000

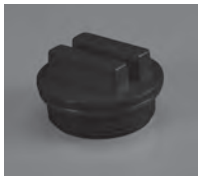

2 in. Plug with O-Ring

SEE PAGE 515 FOR REPLACEMENT PARTS

RETURN FITTINGS
FOR SWIMMING POOLS

Ordering Information

Product	Description	Carton Qty.	Carton Wt. (Lbs.)
	GUNITE/CONCRETE		
542402	Long body, 1-1/2 in. threaded x 1-1/2 in. socket, white	50	9
542405	Standard body, 1-1/2 in. threaded x 1-1/2 in. socket, white	50	9
	FIBERGLASS POOLS & SPAS [2]		
542411	Long body, 1-1/2 in. threaded x 1-1/2 in. socket, spacer/locknut, white	50	9
	CONCRETE-WALLED VINYL LINER POOLS [1]		
542429	Standard body, 1-1/2 in. threaded x 1-1/2 in. socket, white	275	9
	VINYL LINER FITTINGS		
86205100	1-1/2 in. FIPT with screws, vinyl liner, white	50	25
545100	Face plate for vinyl liner return fitting, white	50	10
545101	Face plate for vinyl liner return fitting, black	50	10
545103	Face plate for vinyl liner return fitting, dark gray	50	10
	INSIDER FITTINGS FOR GUNITE/CONCRETE POOLS		
542423	2 in. slip body, for schedule 40 pvc pipe, white	100	7
542424	2 in. slip body, for schedule 40 pvc pipe, black	100	7

[1] Includes face plate, screws, & gaskets.

[2] Includes back gaskets.

542405

542402

542429

542411

86205100

542411

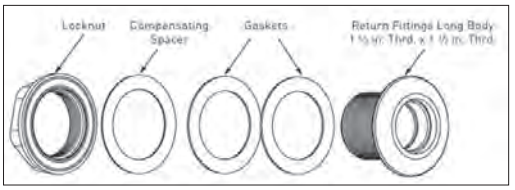

542429

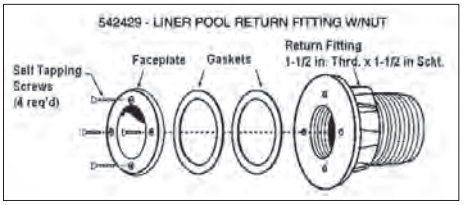

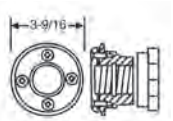

542429

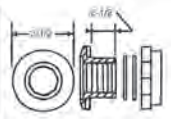
542411

CALIFORNIA PROPOSITION 65 WARNING

⚠ **WARNING:** Cancer and Reproductive Harm.
⚠ **AVERTISSEMENT:** Peut Causer le Cancer et des Dommages au Système Reproducteur.
⚠ **ADVERTENCIA:** Cáncer y Daño Reproductivo.

www.p65warnings.ca.gov. P/N 200174-A

WALL FITTINGS - INLETS

Ordering Information

Product	Description	Carton Qty.
	1-1/2 INCH THREADED DIRECTIONAL EYEBALLS	
542087	Ultimate eyeball 1-1/2 in. threaded with snap-in disks, 1/2 in., 3/4 in., 1 in., white	50
540014	1/2 in. opening, white	50
540021Z	3/4 in. opening, white	50
	ECONOMY INSIDER	
542000	1 in. slip inlet with snap-in 3/8 in., 3/4 in. and pressure test disks, white	300
542002	1-1/2 in. slip inlet with snap-in 1/2 in., 3/4 in, 1 in., and pressure test disks, white	200

542087

Economy Insider
542000

Directional eyeball inlets with 1-1/2 in. MIP thread to fit standard female adapter or wall fitting

SEE PAGE 515 FOR REPLACEMENT PARTS

AUTOMATIC WATER FILLERS

WATER LEVEL CONTROL

Featured Highlights

- Available for standard inground and vanishing edge pools
- Helps prevent equipment damage due to low water levels
- No electronic controls
- Aids in the prevention of water waste and landscape damage due to overfilling pool
- Available with white, gray, and almond colored lids

Automatic Water Fillers

Ordering Information

Product	Description
AUTOMATIC WATER FILLERS	
T40BBE	AutoFill w/ side mounted float valve, almond
T40BG	AutoFill w/ side mounted float valve, gray
T40BW	AutoFill w/ side mounted float valve, white
T40FB	AutoFill w/ Fluidmaster® valve, almond
T40FG	AutoFill w/ Fluidmaster valve, gray
T40FW	AutoFill w/ Fluidmaster valve, white
T40FNB	AutoFill Vanishing Edge w/ Fluidmaster valve, almond
T40FNW	AutoFill Vanishing Edge w/ Fluidmaster valve, white

Small Filler Dimensions

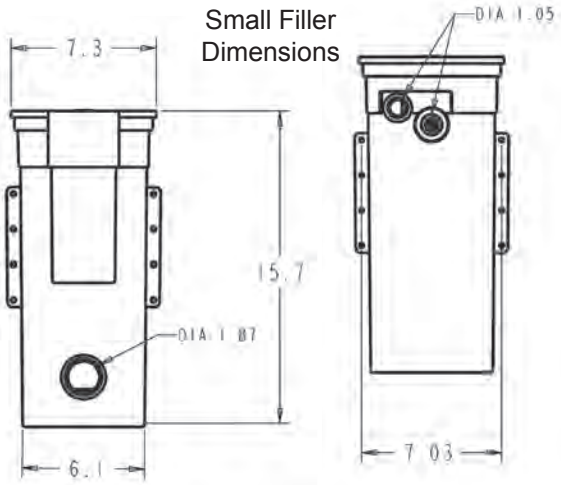

Fluidmaster Valve

Large Filler Dimensions

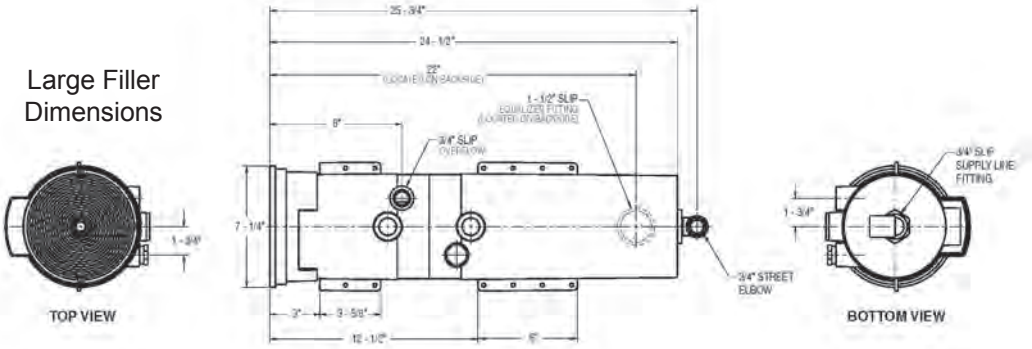

CALIFORNIA PROPOSITION 65 WARNING

⚠ **WARNING:** Cancer and Reproductive Harm.
⚠ **AVERTISSEMENT:** Peut Causer le Cancer et des Dommages au Système Reproducteur.
⚠ **ADVERTENCIA:** Cáncer y Daño Reproductivo.

www.p65warnings.ca.gov. P/N 200174-A

SEE PAGE 515 FOR REPLACEMENT PARTS

INLINE THERMOMETERS

FOR POOL AND SOLAR APPLICATIONS

CALIFORNIA PROPOSITION 65 WARNING

⚠ **WARNING:** Cancer and Reproductive Harm.
⚠ **AVERTISSEMENT:** Peut Causer le Cancer et des Dommages au Système Reproducteur.
⚠ **ADVERTENCIA:** Cáncer y Daño Reproductivo.
www.p65warnings.ca.gov. P/N 20017-A

Ordering Information

Product	Description	Carton Qty.
INLINE THERMOMETER WELLS		
SWN	Nylon well	12
INLINE THERMOMETERS for Pool Applications		
SL1DW	30/130°F. w/ Nylon well	12

FLOWMETERS

FOR COMMERCIAL AND INDUSTRIAL LIQUID APPLICATIONS

Flowmeter

CALIFORNIA PROPOSITION 65 WARNING

⚠ **WARNING:** Cancer and Reproductive Harm.
⚠ **AVERTISSEMENT:** Peut Causer le Cancer et des Dommages au Système Reproducteur.
⚠ **ADVERTENCIA:** Cáncer y Daño Reproductivo.
www.p65warnings.ca.gov. P/N 20017-A

Featured Highlights

- Stainless steel guide and floats
- Easy installation and maintenance; no tools required, tightens by hand
- Textured surface on back of meter for improved readability
- Easy to read GPM and LPM Scales
- Brass threaded knurled nuts for durability

Ordering Information

Product	GPM	Description	Carton Qty.	Carton Wt. (Lbs.)
SMALL BODY FLOWMETERS				
LDF359N	2–16	3/4 in., Nylon threaded end	12	3/4
LDF359T	2–16	1 in., Brass threaded end	12	1-1/4

SEE PAGE 515 FOR REPLACEMENT PARTS