PENTAIR

INTELLICHLOR® SALT CHLORINATOR COMMERCIAL SYSTEM

COMSYS-8 (P/N 520973)

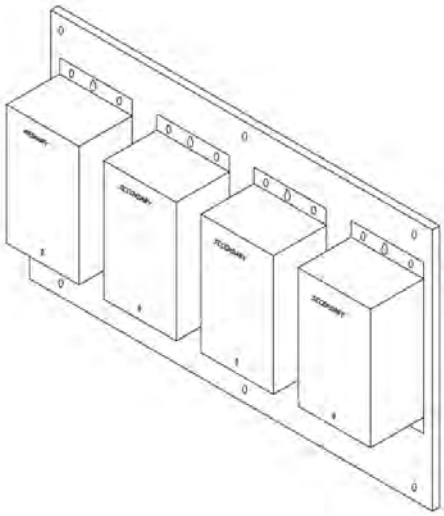

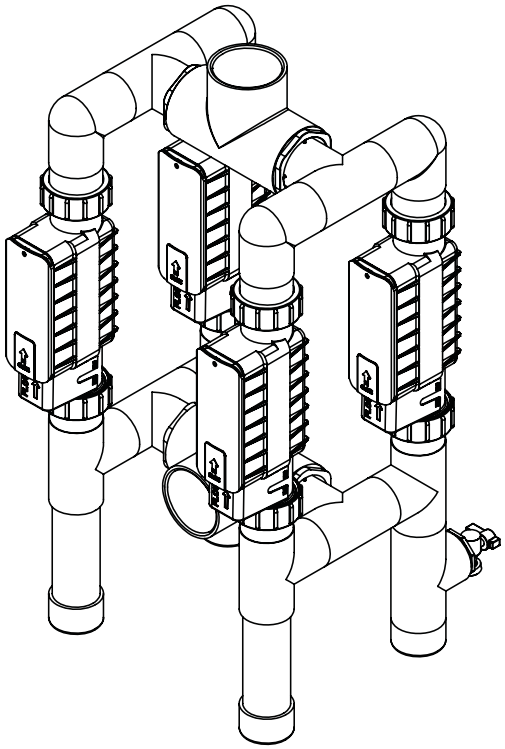

NSF 50

CE

UL CERTIFIED

INSTALLATION GUIDE

IMPORTANT SAFETY INSTRUCTIONS
READ AND FOLLOW ALL INSTRUCTIONS
SAVE THESE INSTRUCTIONS

Customer Support
8 A.M. to 7:30 PM
Phone: (800) 831-7133
Fax: (800) 284-4151

P/N 520983 REV. C 8/7/23

IntelliChlor® Salt Chlorine Generator COMSYS-8 Overview

The IntelliChlor COMSYS-8 commercial system consists of four IntelliChlor cells and four power centers (one primary and three secondary).

Each cell can produce up to 2.00 lbs of pure chlorine per 24 hours of operation. These cells can sanitize either a pool or spa, or combination of both. A commercial system requires an external ORP panel and sensor to produce chlorine upon demand as needed. The ORP system is sold separately.

Features

- Each cell draws approximately 220 Watts.
- Dry contact wires on primary power center connect to chlorine controller panel (ORP system). Closing these wires turns the Comsys system on with an output level of 100%. The system is now producing chlorine. Opening these wires turns the Comsys system off with an output level of 0%, so the system is not producing chlorine.
- Each cell produces 2.00 pounds of chlorine per 24 hours.
- Comsys-8 (4-cell - 1 primary and 3 secondary) produces eight pounds of chlorine per day.
- The ORP system (not provided) is a separate device that monitors the available chlorine in the water and, when needed, calls for chlorine to be produced by closing a dry contact output. An ORP system consists of a panel, usually with an LCD display, that has the ORP sensor in the water.

Preparing the Site

1. Add salt to the water until it measures 3600 ppm. Use an electronic tester to measure salt, such as the Extech EC400. DO NOT USE SALT TEST STRIPS AS THEY TEND TO BE INACCURATE. Allow the salt to mix for 24 hours before using the IntelliChlor system.
2. Locate a clear spot on a wall, within 15 feet of the IntelliChlor manifold.
3. Locate a clear spot on the return line where the IntelliChlor manifold will be mounted. Be sure that the user can readily see the lights and press buttons if needed.
4. Be sure 110VAC or 220VAC is available and on its own circuit breaker, to power the IntelliChlor power centers. This separate breaker will make it easier to service the IntelliChlor.
5. Be sure 110VAC or 220VAC is provided to the power center bank in a conduit, for maximum safety and NEC compliance.

Installation

Before installing the IntelliChlor CIC60 system, please read all SAFEY PRECAUTIONS below.

Kit Contents

- Four Power Centers (one primary, three secondary)
- One CIC60P cell
- Three CIC60S cells
- Installation Guide (this manual)

Required Tools

- Medium phillips or flathead screwdriver (and six screws)
- Electric drill and 1/4" masonry drill bit. (To mount Power Center Bank)

⚠ SAFETY PRECAUTIONS - PLEASE READ BEFORE PROCEEDING

⚠DANGER



IMPORTANT SAFETY PRECAUTIONS. PLEASE READ THE FOLLOWING:
Read all the safety precautions in this manual before attempting any electrical wiring. Be sure to read and follow all safety Instructions on page ii. Wiring should only be performed by a qualified professional. When using electrical products, basic precautions should always be followed, including the following:

⚠WARNING **RISK OF ELECTRIC SHOCK, WHICH CAN RESULT IN SERIOUS INJURY OR DEATH.** Before attempting installation of service, ensure that all power to the circuit supplying power to the system is disconnected/switched off at the circuit breaker. The Power Center must be interconnected with pool pump motor power source. This insures the IntelliChlor chlorinator and pool pump will switch on and off together.

- Grounding (earth bonding) is required. The unit should be installed by a qualified service person and grounded.

CAUTION - Install the IntelliChlor cell a minimum of two (2) feet from the heater outlet.

- Allow ample access to the IntelliChlor control panel buttons and the IntelliChlor Power Center.
- Pipe couplings: Schedule 80, maximum pressure 150 psi at 70° F.
- Operate unit with a minimum flow rate of 25 gpm per cell. For high flow applications, use a bypass loop.

Mount Primary and Secondary Power Center To Wall

1. Locate a wall near the pool equipment area within 15 feet of the IntelliChlor cells. Position the primary and secondary power center at eye level. Mount and secure the power center bank to the wall using six (6) screws (not provided in kit). **Note: The power centers are pre-wired to each other.**
2. Remove the cover retaining screw and remove the cover from the **PRIMARY** power center.

Mount power centers to wall using six (6) screws

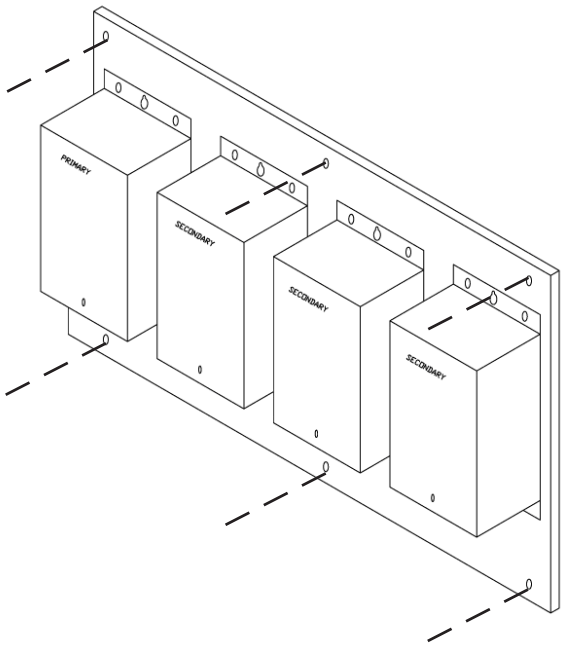

Connect AC Power Wires and ORP Sensor Wires

1. Provide 208-260VAC power to the PRIMARY POWER CENTER. This power should be on its own breaker for future servicing. A (knock-out) opening is provided on the bottom of the power center for a conduit.

   Note: *For 110VAC operations, each power center will need to be re-configured. A 110VAC wiring diagram is provided on the inside of each the power center covers.*
2. Splice the incoming AC power wires onto the two wires labeled **WIRED FOR 220V**. Do not apply AC power yet.
3. Connect the two (2) twisted wires labeled **ORP SENSOR** to the ORP chlorine controller panel (AcuTrol, etc. not provided in kit). Carefully place the connection inside of power center.
4. Replace the cover. Secure it using the retaining screw.

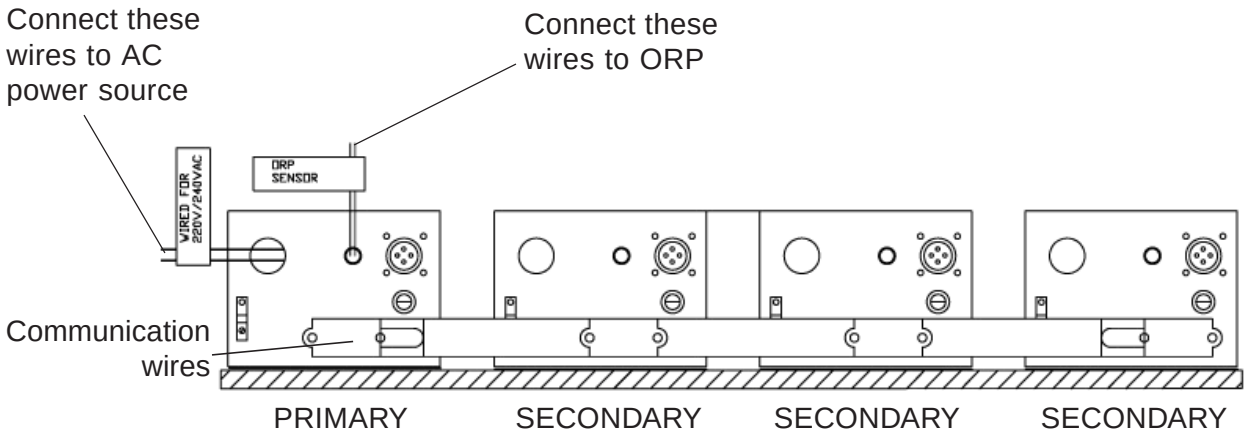

Assemble the Manifold

1. Place an o-ring into groove on union coupling.
2. Place each cell on the manifold and tighten coupling nut securely. Be sure the o-ring stays in place. ***Note: Cells labeled PRIMARY and SECONDARY can be placed anywhere in the manifold, they do not need to be in a specific location.***
3. Glue the manifold into the system plumbing at desired location. The manifold MUST be installed vertically. Make sure the cells are readable and the buttons can be pressed if needed.
   CAUTION: Do not install upside down!
4. Verify water flow direction See the FLOW arrow located on the IntelliChlor cell near the input coupling.

IMPORTANT! MANIFOLD ASSEMBLY AND INTELLICHLOR CELL MUST BE INSTALLED IN THE VERTICAL POSITION, AS SHOWN BELOW.

⚠CAUTION

DO NOT MIX OLD AND NEW MANIFOLD PARTS. MANIFOLD DIMENSIONS MAY NOT BE BACKWARDS COMPATIBLE.

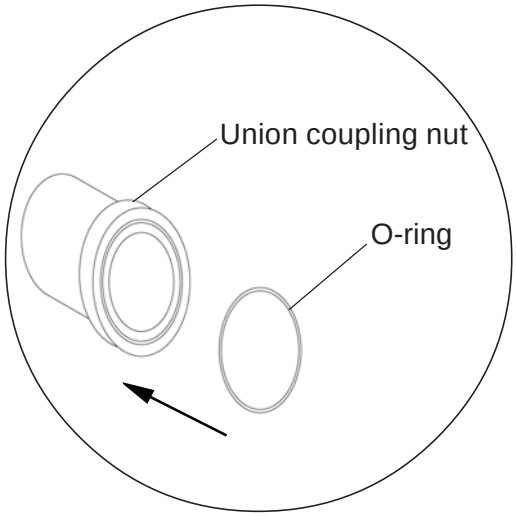

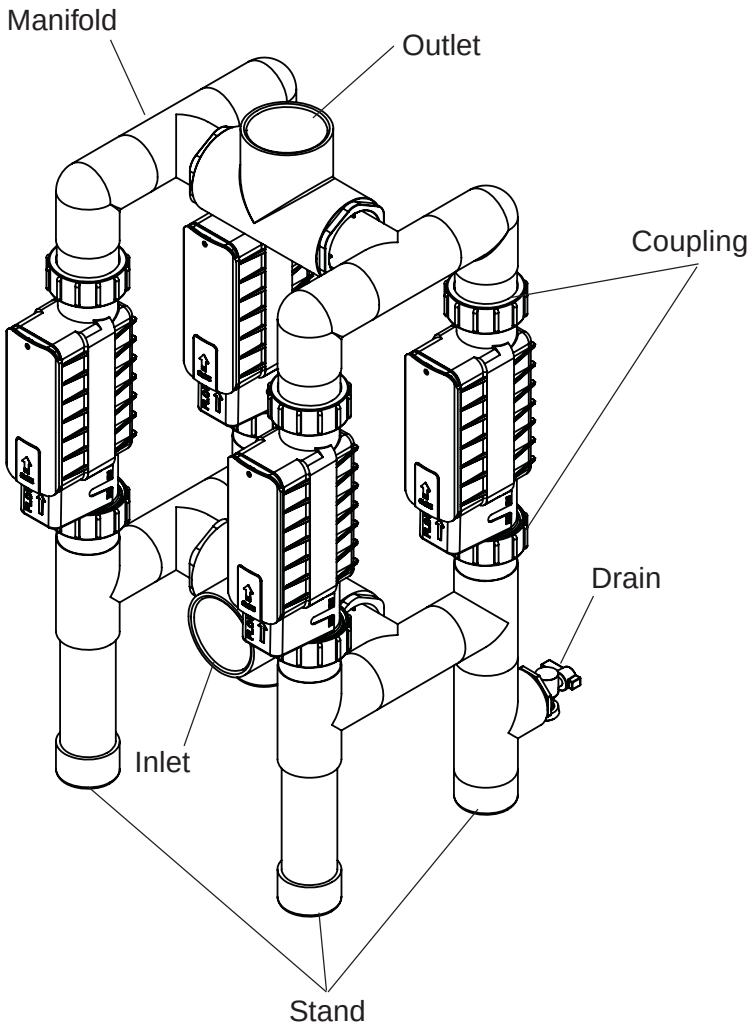

Connect the IntelliChlor Cells

1. Connect the cell power connector, labeled **PRIMARY (CIC60P)**, into the receptacle on the bottom of the power center labeled **PRIMARY**. While holding the connector on the receptacle, turn it slowly until the plug pins are inserted into the receptacle, then twist it to lock it in place.
2. Plug the three SECONDARY cell power connectors into each of the power centers labeled **SECONDARY** using same method as described in step 1.

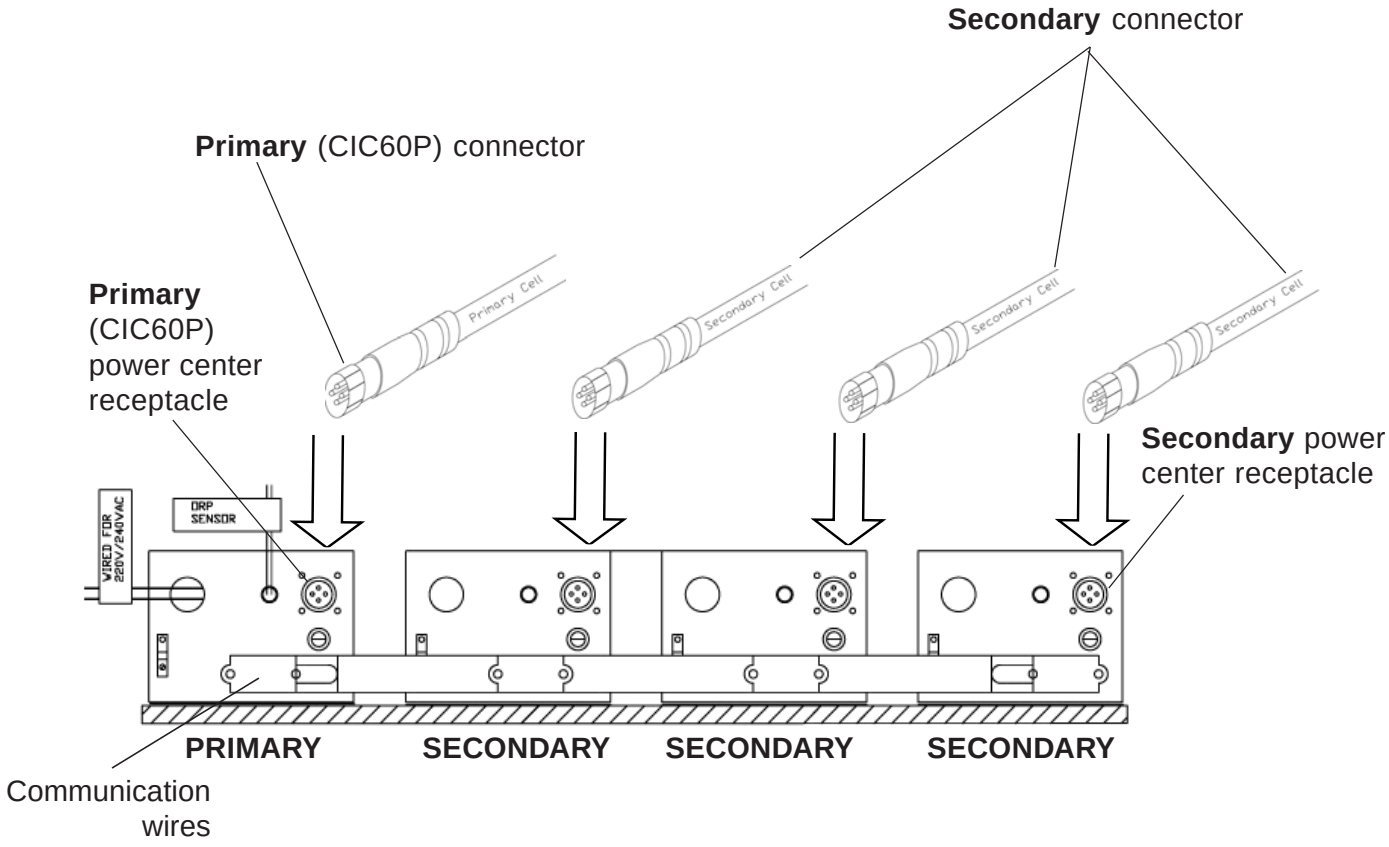

Power Centers

The **PRIMARY** and **SECONDARY** power centers have been pre-wired with communication wires as shown below.

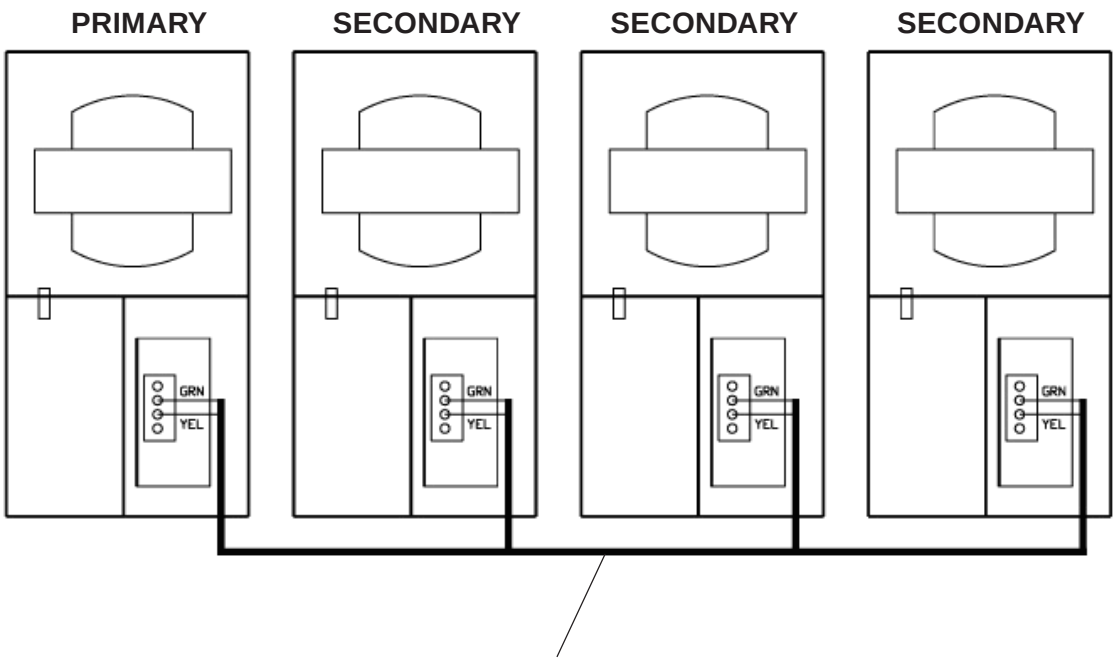

Power Centers (Front View)

Power Up the system

1. Switch the AC circuit breaker to ON to apply AC power to the system.
2. After the system is powered up for one minute, if any SECONDARY cell shows a red light, the communications to that cell is not connected.

   Open the power center covers and verify the two green and yellow wires on each terminal block are connected and in the same order. Verify these connections from each SECONDARY power center to the PRIMARY power center (see page 6).
3. Apply water flow to the cell manifold. When water flow is present, each cell's FLOW light will go from red (no flow) to green (flow).
4. The GOOD, CHECK SALT and LOW salt lights on each cell will scroll back and forth for two minutes before checking the salt level. If water flow is not present, this two minutes will start over when flow is restored. Note: THE SALT LEVEL CAN NOT BE CHECKED WHEN THE FLOW LIGHT IS RED.
5. After two minutes, the salt level will be read and displayed on all cells.

Operation

When the ORP system requests chlorine, it closes the dry-contact output that is connected to the ORP SENSOR wires, and causes each cell to set its output level to 100%. The CELL light will turn on and chlorine will be produced. If the ORP system is not requesting chlorine (ORP SENSOR wires open), all lights in the SANITIZER OUTPUT section will be off, no chlorine is produced.

Chlorine will be produced only when:

- SANITIZER OUTPUT 100% light is on
- CELL is green and not flashing
- FLOW light is green
- Salt is FLASHING GOOD, GOOD, or CHECK SALT

Note: Verify each cell has a green FLOW light, to show that adequate water is flowing through the cell.

- After power up, all cells will scroll the salt lights LOW, CHECK SALT and GOOD for 2 minutes while waiting to check salt. If FLOW is red, these lights will scroll indefinitely.
- After 2 minutes of green FLOW, the salt will be read and all cells will now display the same salt color.
- If the CELL light is flashing, the cell has become dirty and requires acid cleaning. Turn off the circuit breaker to the power centers, disable water flow through the manifold (either an external valve or turn off the filter pump), and remove the cell. Check the cell and acid clean if necessary.

Troubleshooting

The IntelliChlor 100% light does not come on when the chlorine controller calls for chlorine

1. Verify the ORP controller is opening and closing the dry-contact output.
2. Remove the ORP SENSOR wires connection from the PRIMARY power center and the ORP controller. Manually tie the ORP SENSOR wires together. This will turn on the cells at 100%. If the 100% lights do not come on for each cell or only one cell, verify the communication wires are connected, shown in POWER UP THE SYSTEM, step 3, page 7.

The IntelliChlor 100% light stays on after the chlorine controller says to stop

1. Verify the communication wires are connected, as shown in section 5, POWER UP THE SYSTEM, step 3.
2. Verify the ORP SENSOR wires are not shorted together in the power center.
3. Verify the ORP controller dry contact output is opening and closing by using an ohmmeter. Manually set this output open and closed using the controller menu system.

The CHECK SALT light is on

More salt needs to be added to the water.

1. Add salt to the water and bring up to 3600ppm. Allow it to mix for 24 hours.
2. The salt level will be automatically checked every 8 hours by the primary cell and displayed.

The LOW salt light is on

Not enough salt is in the water to produce chlorine, cell is OFF.

1. Add salt to the water and bring up to 3600ppm. Allow it to mix for 24 hours.
2. The salt level will be checked every 8 hours by the cells and displayed.

Not enough chlorine is produced

1. Ensure the ORP sensor probe on the chlorine controller unit is clean and working.
2. Verify the IntelliChlor cells do not have a flashing CELL light. If so, remove the cell and acid clean.
3. Verify no debris is in the cells. Remove if present.
4. Verify the FLOW light is green, for adequate water flow.
5. Verify the salt level lights are displaying either green GOOD or yellow CHECK SALT. If displaying yellow CHECK SALT, add salt to the water, and allow to mix for 24 hours.
6. Verify the ORP controller sets the cells to 100% SANITIZER OUTPUT or 0%, by manually controlling this output relay (done in the ORP controller, not the IntelliChlor) or by disconnecting the ORP SENSOR wires from the power center and manually opening and closing the wires.
7. Verify the ORP probe is clean.
8. Verify the filter pump is not being turned off by a timer.

The cell is not powered up

1. Check fuse, replace if open.
2. Check if cell connector is plugged and twist-locked all the way in.

Fuse is blown

1. Replace with 12 amp ceramic fuse. DO NOT USE 10AMP glass (a common fuse), it is not reliable and might fail later. If the fuse blows again, replace the cell.
2. Verify the Power center is not wired for 110VAC and has 220VAC applied to it. THIS IS NOT COVERED BY THE WARRANTY.

⚠ WARNING

Salt is an inherently corrosive material. While the levels of salt required for proper operation of the IntelliChlor Salt Chlorine Generatorr (SCG) are relatively low when compared to sea water and other salt solutions, placing any amount of salt in your pool increases the likelihood of corrosion or other deterioration of pool equipment and any surfaces used in and around your pool. Metal parts (including metal pools) and certain natural and man-made surfaces are particularly susceptible to corrosion and deterioration when used in and around salt water pools. Pentair Water Pool and Spa, Inc. ("Pentair") does not represent or otherwise guarantee that the proper use of the (SCG) will prevent corrosion or other deterioration of pool equipment and any surfaces used in and around your pool. Consult your experienced pool professional, who should be able to advise you on the proper material selection, installation techniques for those materials, and the proper use, care and maintenance of those materials for your specific pool type and location in order to minimize the corrosion and deterioration that is inherent in and around salt water pools.

PENTAIR

1620 HAWKINS AVE., SANFORD, NC 27330 • (919) 566-8000
10951 WEST LOS ANGELES AVE., MOORPARK, CA 93021 • (805) 553-5000

All indicated Pentair trademarks and logos are property of Pentair. Third party registered and unregistered trademarks and logos are the property of their respective owners.

© 2023 Pentair. All rights reserved. WWW.PENTAIR.COM

P/N 520983 REV. C 8/7/23