PENTAIR

COLORVISION®
LED BUBBLER

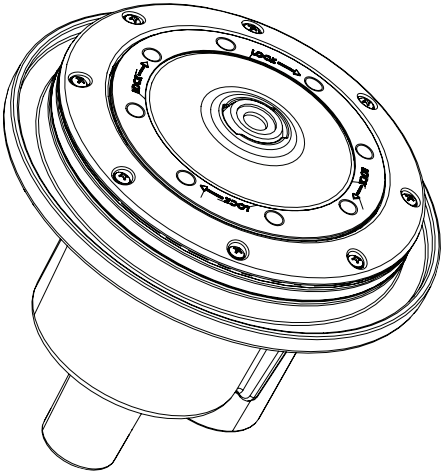

INSTALLATION AND USER'S GUIDE

IMPORTANT SAFETY INSTRUCTIONS
READ AND FOLLOW ALL INSTRUCTIONS
SAVE THESE INSTRUCTIONS

Technical Support

Phone: **(800) 831-7133 -** Fax: **(800) 284-4151**
www.pentair.com

Contents

IMPORTANT WARNING AND SAFETY INSTRUCTIONS..... ii
Overview 1
Operating ColorVision Lights Using A Wall Switch 1
Using an External Transformer for Multiple ColorVision Lights 2
Maximum wattage when using multiple ColorVision Light and IntelliBrite Color LED lights (using a 300 Watt Transformer) 2
Powering on the ColorVision Light 2
Selecting a light show or fixed color using a wall switch 3
Saving a Color Show or Fixed Color 4
Troubleshooting 4
Installing the ColorVision Light Fixture (new pool construction) 5
Installing the ColorVision Light Niche in a Gunite / Concrete Pool (after electrical requirements are met) 5
Installing the ColorVision Color Light Niche in a Fiberglass Pool 7
Installing the ColorVision Color Light Niche in a Vinyl Pool 8
Installing the GloBrite Color Light Assembly (After Niche Installation) 11
Replacing ColorVision Light Assembly (in an existing pool and spa) 15
Replacing ColorVision Light Assembly (after electrical requirements are met) 16
Winterizing ColorVision Light Assembly 20
Pressure Testing ColorVision Light Assembly 20
Pressure Testing ColorVision Light Assembly 20
Connecting ColorVision Lights to an Automation Control System..... 21
APPENDIX: Accessories Bag Assembly Instructions 23
ColorVision Light Extended Nozzle Installation Instructions 24
ColorVision Light Water Depth and Plume Height Chart 26
ColorVision Light Niche Dimensions 27
Replacement Parts List 29

c UL US
LISTED
E344048

IMPORTANT WARNING AND SAFETY INSTRUCTIONS

DANGER **SERIOUS BODILY INJURY OR DEATH CAN RESULT IF THIS LIGHT IS NOT INSTALLED AND USED CORRECTLY.**

DANGER **INSTALLERS, POOL OPERATORS AND POOL OWNERS MUST READ THESE WARNINGS AND ALL INSTRUCTIONS BEFORE USING THE POOL AND/OR SPA LIGHT.**

WARNING Most states and local codes regulate the construction, installation, and operation of public pools and spas, and the construction of residential pools and spas. It is important to comply with these codes, many of which directly regulate the installation and use of this product. Consult your local building and health codes for more information.

IMPORTANT NOTICE - Attention Installer: This Installation and User's Guide ("Guide") contains important information about the installation, operation and safe use of this underwater pool and spa light. This Guide should be given to the owner and/or operator of this equipment.

WARNING Before installing this product, read and follow all warning notices and instructions in this Guide. Failure to follow warnings and instructions can result in severe injury, death, or property damage.
Call (800) 831-7133 for additional free copies of these instructions. Please refer to www.pentair.com for more information related to this products.

DANGER

RISK OF ELECTRICAL SHOCK OR ELECTROCUTION! UNDERWATER POOL LIGHTS REQUIRE HIGH VOLTAGE WHICH CAN SHOCK, BURN, OR CAUSE DEATH.
Before working on or servicing pool lights, always disconnect power to the pool and/or spa lights at the source circuit breaker from the light before servicing the light. Failure to do so could result in death or serious injury to service person, pool users or others due to electric shock. When installing and using this electrical equipment, basic safety precautions should always be followed.

This underwater light must be installed by a licensed or certified electrician or a qualified pool professional in accordance with the current National Electrical Code (NEC), NFPA 70 or the Canadian Electrical Code (CEC), CSA C22.1. All applicable local installation codes and ordinances must also be adhered to. Improper installation will create an electrical hazard which could result in death or serious injury to pool users, installers or others due to electrical shock, and may also cause damage to power source. Always disconnect the power to the pool light at the circuit breaker before servicing the light. Failure to do so could result in death or serious injury to serviceman, pool users or others due to electrical shock.

IMPORTANT WARNING AND SAFETY INSTRUCTIONS

NOTICE: The external flexible cable or cord of this luminaire cannot be replaced; if the cord is damaged, the luminaire shall be destroyed.

⚠WARNING Under **no circumstances** replace lights by splicing wire under water or behind niche.

⚠DANGER **Light is a 12 VAC system. ONLY USE an approved 12 VAC transformer, sold separately. When using a Junction Box, connect 12 VAC connections to junction box terminals. Never connect the light directly to high voltage lines.**

INSTALLERS AND INSPECTORS: THE COLORVISION LIGHT AND PLASTIC NICHE FORM A COMPLETE NON-METALLIC LOW VOLTAGE LIGHTING SYSTEM. THIS CONFIGURATION DOES NOT REQUIRE BONDING OR GROUNDING WHEN POWERED BY A LISTED 100 WATT OR 300 WATT 12 VAC TRANSFORMER AND INSTALLED IN COMPLIANCE WITH THE CURRENT NATIONAL ELECTRIC CODE (NEC). UNBONDED LIGHTING NEC PROVISIONS.

WHEN THE UL LISTED NON-METALLIC COLORVISION LIGHT LOW VOLTAGE LIGHTS ARE USED WITH THE LIGHT APPROVED NICHE, THE CURRENT NEC PROVIDES AN EXCEPTION TO LUMINAIRE BONDING AND GROUNDING IN ARTICLE 680.6 AND 680.23 POOL WATER BONDING NEC PROVISIONS: FOR POOL WATER BONDING REQUIRED BY NEC ARTICLE 680.26C, CONCRETE POOLS ARE CONSIDERED CONDUCTIVE (REFER TO 680.26 (B)(1) DUE TO THE POROSITY OF CONCRETE AND THE BONDING OF REBAR. NO ADDITIONAL BONDING IS REQUIRED.

⚠WARNING **For countries in compliance with International Electrotechnical Commission (IEC) regulatory standards:** The light fixture must be installed by a licensed or certified electrician or a qualified pool service person, in accordance with IEC 364-7-702 and all applicable local codes and ordinance. Improper installation will create an electrical hazard, which could result in death or serious injury to pool user, installer or other due to electrical shock and may also cause damage to the property.

IMPORTANT NOTICE: THE GLOBRITE LIGHT IS A NON-SERVICEABLE LIGHT. THE COMPLETE LIGHT ASSEMBLY MUST BE REPLACED.

ColorVision LED Bubbler Overview

This manual describes how to install and replace the ColorVision® LED Bubbler. The ColorVision light provides brilliant vivid multi-colors along with spectacular lighting and underwater “bubbling” effects for your pool and spa. The energy efficient colored array utilizes IntelliBrite® Color LED Light technology and can cycle through colors at varying speeds and in different sequences of colors. Choose one of the seven pre-programmed color light shows or select one of the five fixed colors to create virtually endless range of dramatic underwater lighting effects for a spectacular effect in your pool and spa.

If multiple LED lighting are being used, it is recommended that these lights be run independent of each other, using a separate transformer for each group or type of light. Otherwise all lights connected to the same transformer will be working together.

Operating ColorVision Lights Using a Wall Switch

ColorVision can be controlled using a standard wall-mount light switch or by the IntelliBrite® Controller (see page 3). Multiple ColorVision lights can be connected via a junction box and 12 VAC transformer to a single switch so that all lights can be switched on and off together. ColorVision lights are controlled by cycling AC power to the 12 VAC transformer from a standard wall switch. By turning the switch Off and On a specific number of times, the light activates one of the seven light show, fixed colors, or enables the “Hold” and “Recall” feature, see page 3.

Pentair Color LED lights can be controlled by Pentair Automation Systems and Light Controllers. Contact your pool dealer for more information.

Using an External Transformer for Multiple ColorVision Lights

When using multiple ColorVision 12 VAC lights on a **100 Watt** transformer, it is recommended that no more than three ColorVision lights be used. It is also recommended not to exceed 150 feet of total cable run between the transformer and lights.

Note: For long cable lengths, set transformer to 14 VAC, and use only ColorVision lights with the 150” cord option, see diagram below.

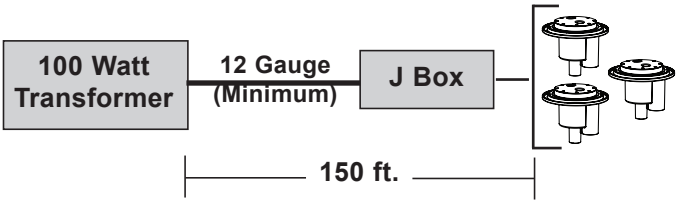

Note: If a longer cable run is necessary, it is recommended that separate **100 Watt 12 VAC** transformers be used for each light with no more than 150 feet of total cable run between the transformer and lights.

Maximum wattage when using multiple ColorVision Light and IntelliBrite® Color LED lights (using a 300 Watt Transformer)

When using multiple 12 VAC ColorVision Light, IntelliBrite Light and IntelliBrite Landscape Lights, the total allowable light wattage is 300 Watts maximum. A transformer should only be loaded to 80% of its capability. For example, a 300 watt transformer should have a maximum of 240 watts attached to it.

ColorVision and IntelliBrite light wattages are as follows:

- One ColorVision light is 15 Watts maximum
- One IntelliBrite Color LED Pool Light is 30 Watts maximum
- One IntelliBrite Color LED Spa Light is 18 Watts maximum
- One IntelliBrite Landscape light is 15 Watts maximum
- One MagicStream® Laminar is 16 Watts maximum
- One GloBrite LED Pool light is 15 Watts maximum

Powering on the ColorVision Light

When the ColorVision light is powered on, the previously selected color is displayed.

***Note**: If power to the light is off for more than 5 seconds, the last color show or fixed color that was saved will be displayed.*

Selecting a Light Show or Fixed Color Using a Wall Switch

ColorVision lights are compatible with IntelliBrite light colors and shows and can be synchronized with IntelliBrite lights. First switch power on to the light; the previously selected color is displayed, unless the HOLD or RECALL feature was previously enabled. To select a color show (1-7) or fixed color (8-12), turn the wall switch Off/On a specific number of times. Each number (1-15) shown below corresponds to the number of times to power-cycle the switch to activate a color light show or fixed color. For details about saving color effects while in a Color Show mode, see “Hold” and “Recall” feature on page 6.

Number of times to cycle power (1-17)	
1	**SAm Mode:** Cycles through white, magenta, blue and green colors (emulates the Pentair SAm® Color Light).
2	**Party Mode:** Rapid color changing building energy and excitement.
3	**Romance Mode:** Slow color transitions creating a mesmerizing and calming effect.
4	**Caribbean Mode:** Transitions between a variety of blues and greens.
5	**American Mode:** Patriotic red, white and blue transition.
6	**California Sunset Mode:** Dramatic transitions of orange, red and magenta tones.
7	**Royal Mode:** Richer, deeper color tones.
8	**Blue:** Fixed color.
9	**Green:** Fixed color.
10	**Red:** Fixed color.
11	**White:** Fixed color.
12	**Magenta:** Fixed color.
13	**Hold:** Save the current color effect during a color light show.
14	**Recall:** Activate the last saved color effect.
15	**White**

Example: To select California Sunset Mode; First switch power on to the light; the previously selected color is displayed, unless the HOLD or RECALL feature was previously enabled, then turn the switch off and on six successive times. During the Off/On switching process, no illumination will occur.

Saving a Color Show or Fixed Color

When power is switched off to the ColorVision lights, the last color show or fixed color will be saved. The next time the light is powered on, the previously saved color show or fixed color will be displayed. For example, while in Party Mode switch the light off. Wait more than 10 seconds, switch the light back on to resume Party Mode.

⚠ WARNING

During the Off/On switching process, before the selected color is displayed, no illumination will occur. This operating mode is normal during the switching process. During this period the pool and spa will be dark and precautions should be taken to avoid unforeseen accidents. Failure to observe this warning may result in serious injury or death to pool and spa users.

Troubleshooting

The light will not illuminate. Light does not function properly.	Be sure that there is proper AC power applied to the light. Check the light wiring connection to the junction box at the pool side and to the AC power switch. Be sure that there is proper AC power applied to the light.

INSTALLING THE COLORVISION LIGHT FIXTURE (NEW POOL CONSTRUCTION)

The following describes how to install the ColorVision Light fixture in concrete/ gunite, fiberglass or vinyl liner.

BEFORE STARTING: The following instructions must be completed by the electrician before the ColorVision light fixture is installed.

⚠ WARNING

Be sure that the pool or spa meets the requirements of the current National Electrical Code (NEC) Article 680-22 and all local codes and ordinances. A licensed or certified electrician must install the electrical system to meet or exceed those requirements before the underwater light is installed. Some of the requirements of the National Electrical Code which the pool's electrical system must meet are as follows:

- The Junction Box and the low voltage transformer is located at least 4 inches (10.1 cm) above ground level or 8 inches (20.3 cm) above maximum water level, whichever is higher. The Junction Box must be at least 48 inches (1.2 m) from the edge of the pool. See Figure 1 on page 6.
- To be certain that the pool or spa electrical system meets all applicable requirements, the electrician should also consult the local building department.

INSTALLING THE COLORVISION LIGHT NICHE IN A GUNITE/CONCRETE POOL (AFTER ELECTRICAL REQUIREMENTS ARE MET)

Determine a Location for the ColorVision Light

- The ColorVision Light should be located at least 3 ft (91.4 cm) from any walls or other ColorVision lights (bubblers).
- The ColorVision light should be installed in water depths between 2 inches and 12 inches (5.1 cm - 30.5 cm).
- The ColorVision light is designed to be installed flush with the pool finish.
- The ColorVision light niche is designed for 1-1/2 inches (3.8 cm) PVC pipe for the water supply and 1 inch (2.5 cm) conduit for the light cable.

INSTALLING THE COLORVISION LIGHT NICHE IN A GUNITE/CONCRETE POOL (AFTER ELECTRICAL REQUIREMENTS ARE MET)

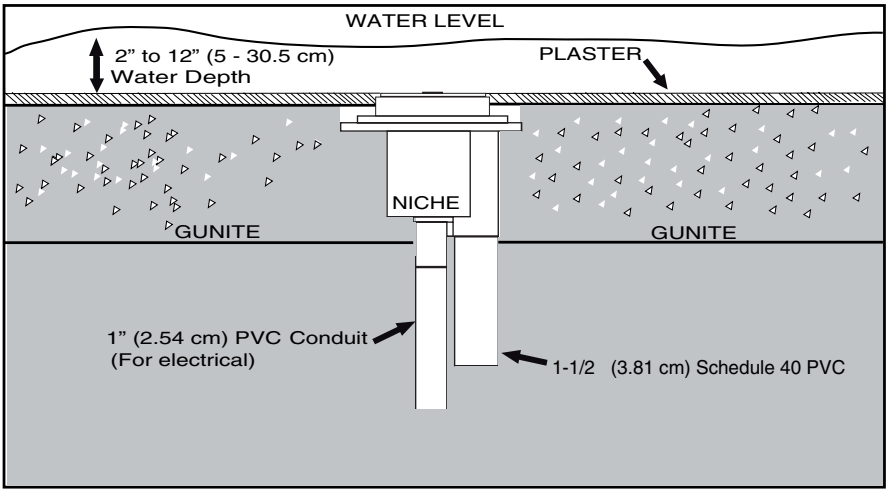

Figure 1.

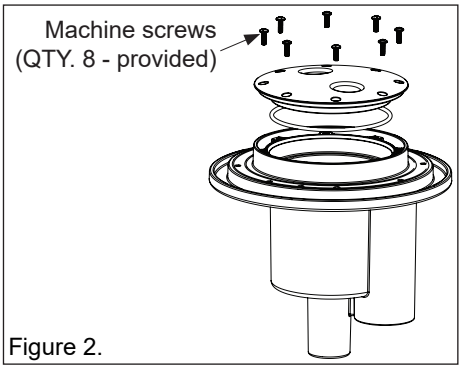

Figure 2.

Note: Prepare the end of the ColorVision light power cable and install to the 12 VAC output wires of an approved transformer (if you are using longer runs of cables or multiple lights per transformer, it is recommended to use the 13 VAC or even the 14 VAC tap on your transformer).

1. Install the O-ring on the gunite cover and install the gunite cover over the top of the niche using the supplied machine screws, see Figure 2. This will protect the light cavity of the niche during installation. Secure the gunite cover with the eight 8-32 x 1/2-inch machine screws (provided), see Figure 2. Using a No. 2 Philips head screwdriver, tighten each retaining screw to 10 (minimum) - 15 (maximum) in-lbs to secure the gunite cover on the niche. DO NOT OVER TIGHTEN THE SCREWS. DO NOT ASSEMBLE WITH POWER TOOLS. Over tightening or using a motorized screwdriver on the gunite cover screws can over torque the screw threads and damage the niche housing and/or gunite cover.

   Note: Cover the mounting screws with tape to prevent concrete and plaster from entering the holes.

   Note: If a gunite cover is not available, use masking tape to protect the light cavity from the plaster operation.

2. Install the ColorVision light niche in the pool or spa floor, see Figure 1 on page 6.
   Note: The niche is ABS so use ABS to PVC cement to connect the water line and electrical conduit to the niche.
3. Set the niche in gunite as per current local building codes.
4. Apply plaster up to the outer edge of the gunite cover. The gunite cover should be the only exposed part of the niche after plastering, see Figure 1 on page 6.
5. After the plastering has been completed, remove and retain the gunite cover. Retain the screws to fasten the lens into the niche.

Installing ColorVision Color Light Niche in a Fiberglass Pool

To install the ColorVision Color Light niche in a fiberglass pool:

1. Cut a six inch hole in the desired location for the ColorVision light niche.
2. The niche may be attached to the fiberglass using marine grade epoxy or silicone or may be mechanically fastened per the instructions below.
3. Place and center the face ring over the cut hole in the fiberglass and mark the mounting screw locations and drill screw clearance holes with a 3/16-inch drill bit.
4. Place the sealing gasket on the niche and align the gasket screw holes with the niche as shown below.
5. Insert the niche through the hole in the pool wall.
6. Install a sealing gasket on top of the fiberglass, aligning the screw holes on the niche as shown below.

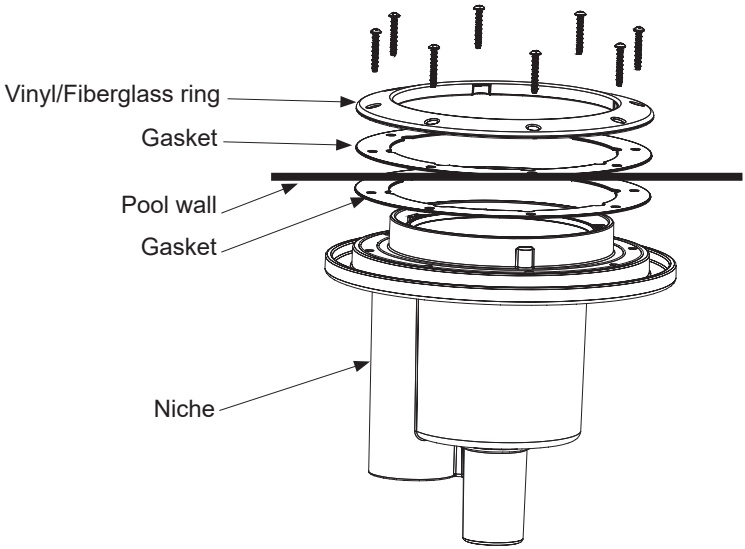

7. Install the face ring, aligning the screw holes. Secure the face ring with the eight #8-18 x 1-inch self-tapping screws (provided), see Figure 3. Using a No. 2 Philips head screwdriver, tighten each retaining screw to **10 (minimum) - 15 (maximum) in-lbs** to secure the face ring and gaskets on the niche. DO NOT OVER TIGHTEN THE SCREWS. DO NOT ASSEMBLE WITH POWER TOOLS. Over tightening or using a motorized screwdriver on the sealing ring screws can over torque the screw threads and damage the niche housing and/or fiberglass seal.
8. Connect the water line and electrical conduit to the bottom of the niche with ABS to PVC cement.

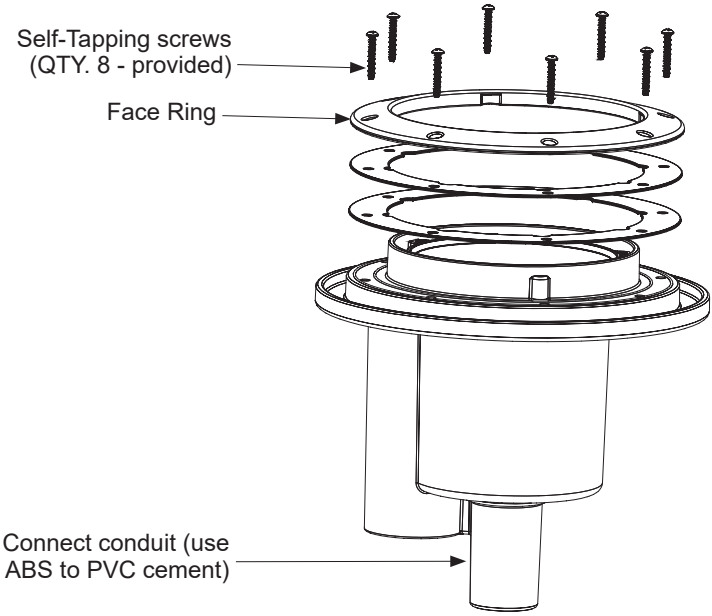

Figure 3.

Installing ColorVision Color Light Niche in a Vinyl Pool

1. Install the O-ring on the gunite cover and install the gunite cover over the top of the niche using the supplied machine screws. This will protect the light cavity of the niche during installation. Secure the gunite cover with the eight 8-32 x 1/2-inch machine screws (provided), see Figure 2 on page 6. Using a No. 2 Philips head screwdriver, tighten each retaining screw to 10 (minimum) - 15 (maximum) in-lbs to secure the gunite cover on the niche. DO NOT OVER TIGHTEN THE SCREWS. DO NOT ASSEMBLE WITH POWER TOOLS. Over tightening or using a motorized screwdriver on the gunite cover can over torque the screw threads and damage the niche housing and/or gunite cover.

   Note: Cover the mounting screws with tape to prevent concrete and plaster from entering the holes.

   Note: If a gunite cover is not available, use masking tape to protect the light cavity from the plaster operation.

2. Place the sealing gasket on the niche and align the gasket screw holes with the niche as shown below.
3. Place the vinyl spacer on the niche aligning the screw holes. Note: there is only one correct orientation of the spacer where all screw holes are aligned with the niche. Fasten with the two #8-18 x 1/2-inch self-tapping screws (provided), see Figure 3 on page 8. Using a No. 2 Philips head screwdriver, tighten each retaining screw to **10 (minimum) - 15 (maximum) in-lbs** to secure the face ring and gaskets on the sump. DO NOT OVER TIGHTEN THE SCREWS. DO NOT ASSEMBLE WITH POWER TOOLS.

   Note: Over tightening or using a motorized screwdriver on the gunite cover can over torque the screw threads and damage the niche housing and/or vinyl spacer ring.

   Note: The vinyl spacer ring must be assembled as shown for the mounting holes to align; recessed area on the outside of the ring.

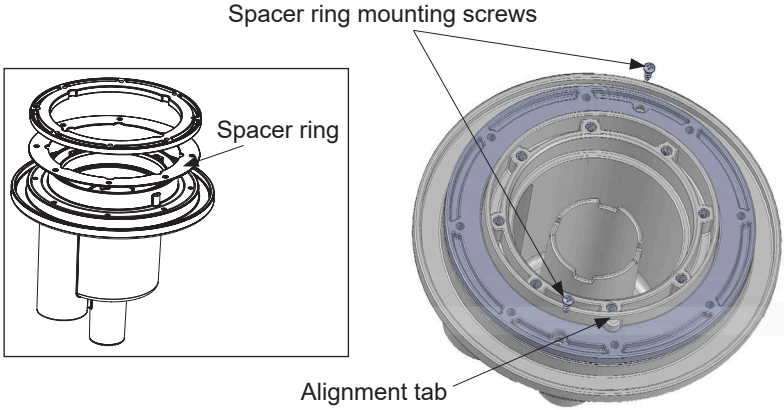

4. Install the ColorVision light niche in the pool or spa floor. Set the niche such that the pool floor is flush with the top of the spacer ring. See Figure 1 on page 6. The niche is ABS so use ABS to PVC cement to connect the water line and electrical conduit to the niche.
5. Install a sealing gasket on top of the vinyl spacer.
6. Install the vinyl liner.

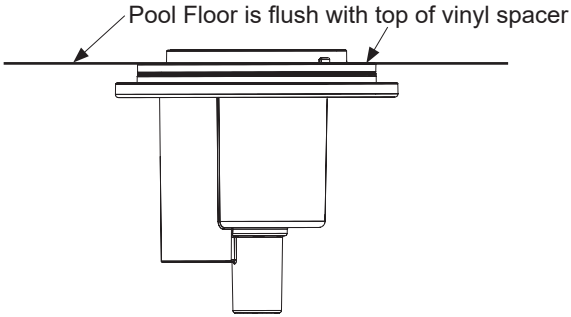

7. Using the alignment tabs on the niche, carefully align the sealing gasket and the faceplate to the niche. Once the faceplate is properly aligned, pierce liner through faceplate and install the screws.

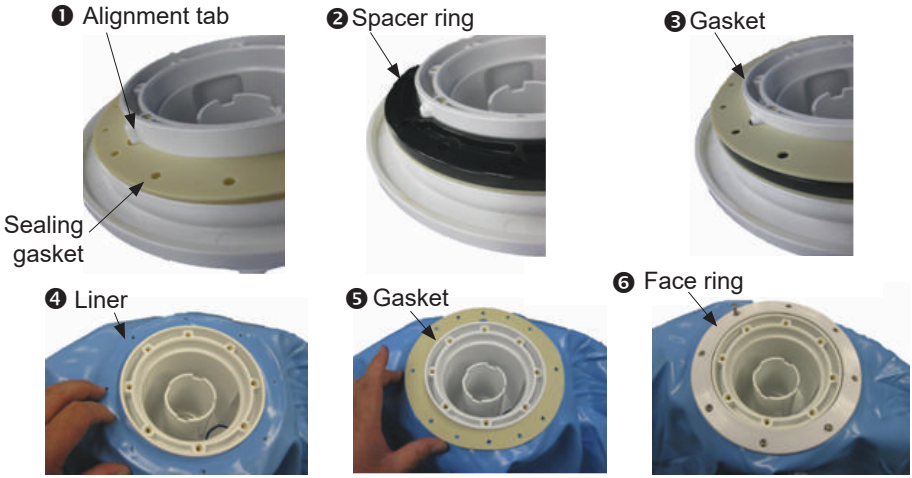

8. Secure the face ring to the niche with the eight #8-18 x 1-inch self-tapping screws (provided), see Figure 3 on page 6. Using a No. 2 Philips head screwdriver, tighten each retaining screw to **10 (minimum) - 15 (maximum) in-lbs** to secure the face ring and gaskets on the niche. DO NOT OVER TIGHTEN THE SCREWS. DO NOT USE A POWER TOOL TO SECURE THE SCREWS. Over tightening or using a motorized screwdriver on the sealing ring screws can over torque the screw threads and damage the niche housing and/or vinyl liner seal.

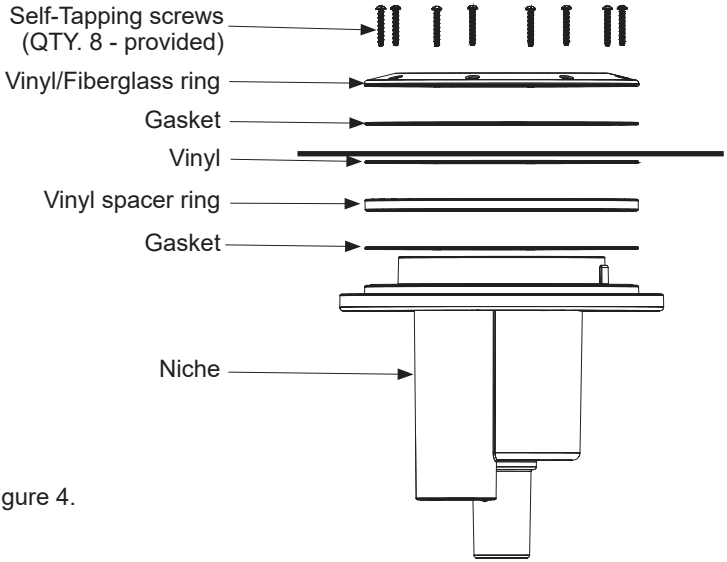

Figure 4.

INSTALLING THE GLOBRITE® LIGHT ASSEMBLY (AFTER NICHE INSTALLATION)

⚠ DANGER

RISK OF ELECTRICAL SHOCK OR ELECTROCUTION
Always disconnect power to the pool light at the circuit breaker before servicing the light. Failure to do so could result in death or serious injury to installer, serviceman, pool users, or others due to electrical shock.

1. Turn off main electrical switch or circuit breaker.
2. Feed cord through Niche and then through conduit to Junction Box or 12 VAC Transformer.

NOTE: This is a 12 VAC system <u>ONLY</u>. An approved 12 VAC transformer (sold separately) <u>must be used</u>. If a Junction Box is used, it would be for 12 VAC connections. Never wire the ColorVision light directly to high voltage lines.

3. At the 12 VAC transformer or junction box, cut off any extra cord. Leave at least 6 inches (15.2 cm) of cord in the Junction Box or transformer to facilitate the light installation, niche inspection. Cut off any extra cord.
4. Strip back 3 inches of the outer cord jacket to expose the two insulated wires (be careful not to damage the insulation on the two inner wires). Strip back the two conductors. Be careful not to damage the copper conductor.
5. Connect both wires to the corresponding circuit wires in the Junction Box or 12 VAC Transformer (black wire to power, white wire to common) and secure the Junction Box cover in place.

6. **Install the new GloBrite® light assembly:** Push the light into the niche while pulling the power cord from the junction box or transformer. Be sure the locking tabs in the back end of the light are properly aligned with the niche openings (inside the niche).

Note: This task requires two persons: One person to push the GloBrite into the niche, and the other person to pull light's power cable through the conduit from the junction box or transformer.

7. Place the light installation tool (P/N 620057) over the front of the light. Turn the tool and light clockwise (less than 1/8 turn), while pushing inward, until you feel the stop point. This indicates the light is properly seated, locked and the niche is completely sealed.

   Note: If the light does not turn smoothly, pull the light slightly out and make sure that it's seated properly and the niche is free of debris, then install the light as described in step 6.

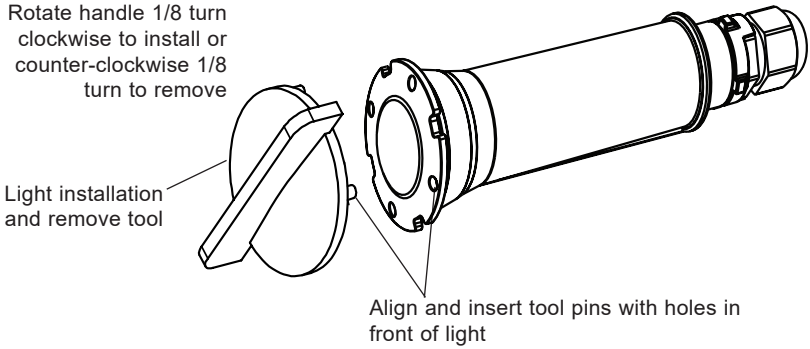

GloBrite Light Installation/Removal Tool

8. Install the diffuser ring (white ring with many small holes), into the niche; concave side up, as shown below.

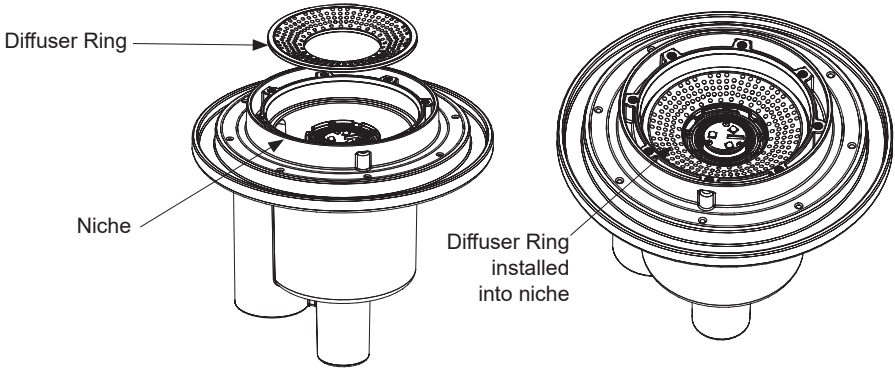

9. Install an O-ring on the lens and install the lens over the top of the niche using the supplier machine screws. Secure the lens with the eight 8-32 x 1/2-inch machine screws (provided), see Figure 5. Using a No. 2 Philips head screwdriver, tighten each retaining screw to **10 (minimum) - 15 (maximum) in-lbs** to secure the lens on the niche. DO NOT OVER TIGHTEN THE SCREWS. DO NOT ASSEMBLE WITH POWER TOOLS. Over tightening or using a motorized screwdriver on the lens screws can over torque the screw threads and damage the niche housing and/or lens.

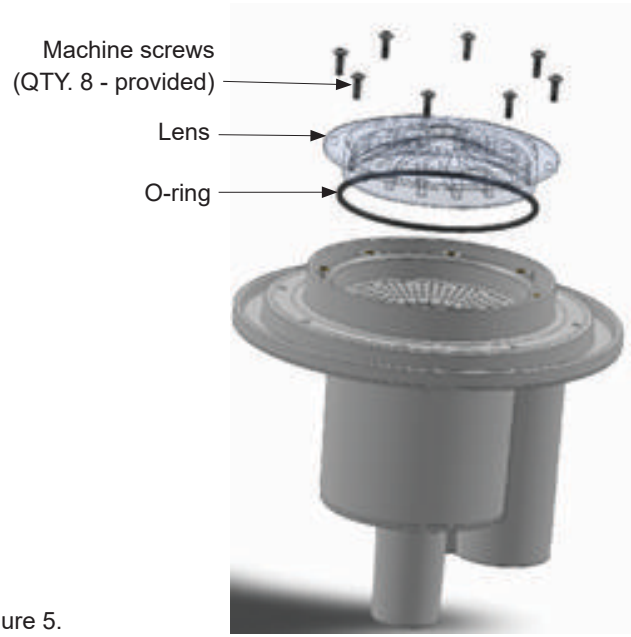

Figure 5.

10. Install the lens screw cover ring on the lens and twist to lock in place.

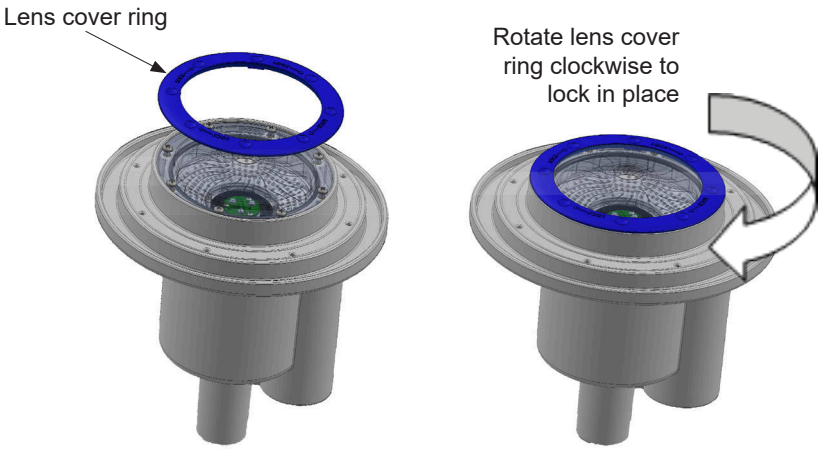

11. Install the desired eyeball fitting included into the lens (See Eyeball Instructions on page 23) by Inserting the eyeball perpendicular into the eyeball housing opening and rotating to center the eyeball into the eyeball housing. Be sure it is pressed all the way down to provide a smooth transition. Adjust the eyeball for proper water direction.

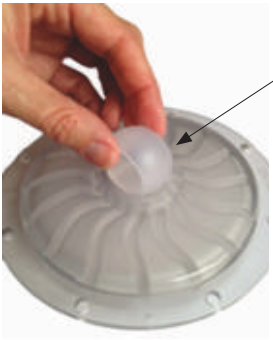

12. Before operating the ColorVision light, fill the pool with water until the light is completely submerged.

    Note: The ColorVision light should not be powered for more than 30 seconds if not submersed in water.

13. **Final check for proper ColorVision light operation:** Switch on the main switch or circuit breaker to the 12 VAC transformer and the switch that operates the GloBrite light itself. The light should illuminate when the 12 VAC power is applied. If not recheck the installation steps.

REPLACING THE LIGHT ASSEMBLY (IN AN EXISTING POOL OR SPA)

DANGER

Risk of Electrical Shock or Electrocution!
This underwater light must be installed by a licensed or certified electrician or a qualified pool professional in accordance with the current National Electrical Code (NEC), NFPA 70 or the Canadian Electrical Code (CEC), CSA C22.1 and all applicable local codes and ordinances. Improper installation will create an electrical hazard which could result in death or serious injury to pool users, installers or others due to electrical shock, and may also cause damage to property.

Always disconnect the power to the pool light at the circuit breaker before servicing the light. Failure to do so could result in death or serious injury to serviceman, pool users or others due to electrical shock.

Verify that the pool and spa meets the requirements of the current National Electrical Code and all local codes and ordinances. A licensed or certified electrician must install the electrical system to meet or exceed those requirements before the underwater light is installed. Some of the requirements of the National Electrical Code which the pool's electrical system must meet are as follows:

- The Junction Box and the low voltage transformer is located at least 4 inches (10.5 cm) above ground level or 8 inches (20.3 cm) above maximum water level, whichever is higher. The Junction Box must be at least 48 inches (1.2 m) from the edge of the pool. See Figure 1 on page 6.
- To be certain that the pool's electrical system meets all applicable requirements, the electrician should also consult the local building department.

IMPORTANT NOTICE:
THE GLOBRITE LIGHT IS A NON-SERVICEABLE LIGHT. THE COMPLETE LIGHT ASSEMBLY MUST BE REPLACED.

REPLACING THE COLORVISION LIGHT ASSEMBLY (AFTER ELECTRICAL REQUIREMENTS ARE MET)

The following removal and installation instructions describe how to remove and install the ColorVision Light assembly. Also use these instructions after completing the following light replacement procedure.

⚠ WARNING

Failure to bring the pool or spa's electrical system up to code requirements before installing the underwater light will create an electrical hazard which could result in death or serious injury to pool users, installers, or others due to electrical shock, and may also cause damage to property.

1. **Switch off electrical switch or circuit breaker at the source.**
2. Remove Junction Box or Transformer cover. Disconnect the light wires and attach a fish tape to the existing light power cord. This will assist in pulling the replacement light power cord through the conduit back to the junction box.
3. Remove the lens cover ring, lens retaining screws, lens and diffuser. Remove the GloBrite color light assembly from the pool or spa water: Using the provided installation tool (P/N 620057), rotate the light assembly counter-clockwise about 1/8 turn to release the light from the niche as shown on page 10).
4. Slowly pull the light and attached power cord (with attached fish tape) out of the niche. Pull the light's power cord and fish tape out of the niche and place the light on the deck.
5. Attach the new light power cord to the fish tape and carefully feed the fish tape and cable to the junction box.
6. At the 12 VAC transformer or junction box, cut off any extra cord. Leave at least 6 inches (15.2 cm) of cord in the Junction Box or transformer to facilitate the light installation, niche inspection. Cut off any extra cord.
7. Strip back 3 inches of the outer cord jacket to expose the two insulated wires (be careful not to damage the insulation on the two inner wires). Strip back the two conductors. Be careful not to damage the copper conductor.
8. Connect both wires to the corresponding circuit wires in the Junction Box or 12 VAC Transformer (black wire to power, white wire to common) and secure the Junction Box cover in place.

9. **Install the new GloBrite® light assembly:** Push the light into the niche while pulling the power cord from the junction box or transformer, making sure the locking tabs in the back end of the light are properly aligned with the niche openings (inside the niche).

10. Place the light installation tool (P/N 620057) over the front of the light. Turn the tool and light clockwise (less than 1/8 turn), while pushing inward, until you feel the stop point. This indicates the light is properly seated, locked and the niche is completely sealed.

    Note: If the light does not turn smoothly, pull the light slightly out and make sure that it's seated properly and the niche is free of debris, then install the light as described in step 6.

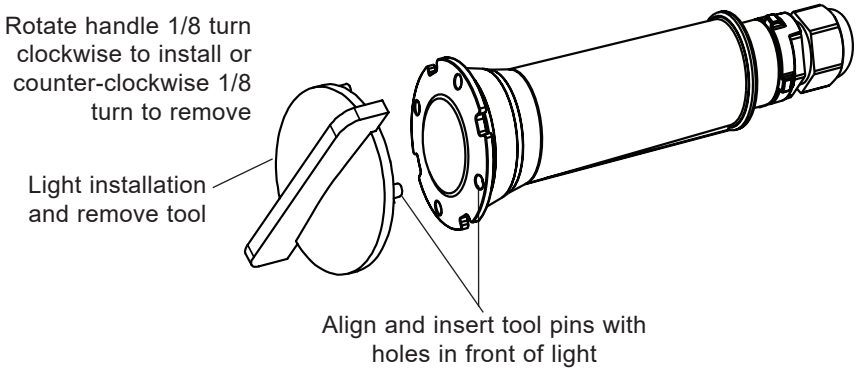

GloBrite Light Installation/Removal Tool

11. Install the diffuser ring (white ring with many small holes), into the niche; concave side up, as shown below.

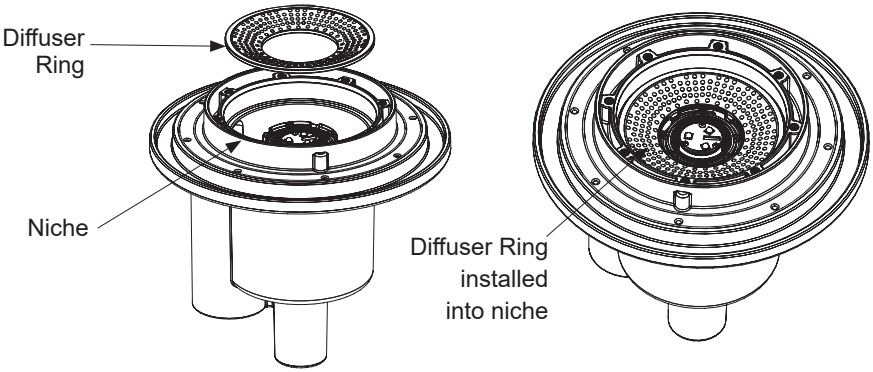

12. Install an O-ring on the lens and install the lens over the top of the niche using the supplier machine screws. Secure the lens with the eight 8-32 x 1/2-inch machine screws (provided), see Figure 1 on page 6. Using a No. 2 Philips head screwdriver, tighten each retaining screw to **10 (minimum) - 15 (maximum) in-lbs** to secure the lens on the niche. DO NOT OVER TIGHTEN THE SCREWS. DO NOT ASSEMBLE WITH POWER TOOLS. Over tightening or using a motorized screwdriver on the lens screws can over torque the screw threads and damage the niche housing and/or lens.

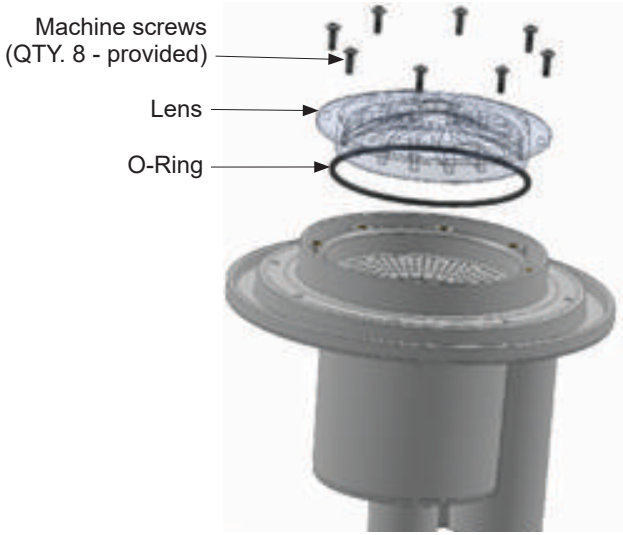

13. Install the lens screw cover ring on the lens and twist to lock in place.

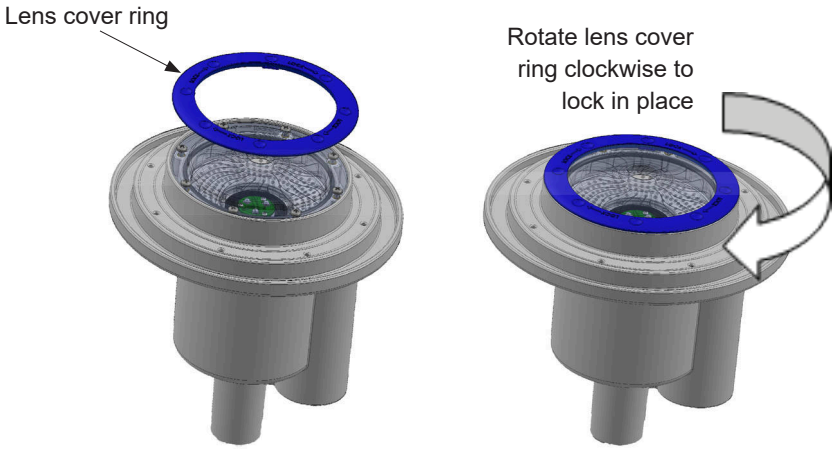

14. Install the desired eyeball fitting included into the lens (See Eyeball Instructions on page 26) by Inserting the eyeball perpendicular into the eyeball housing opening and rotating to center the eyeball into the eyeball housing. Be sure it is pressed all the way down to provide a smooth transition. Adjust the eyeball for proper water direction.

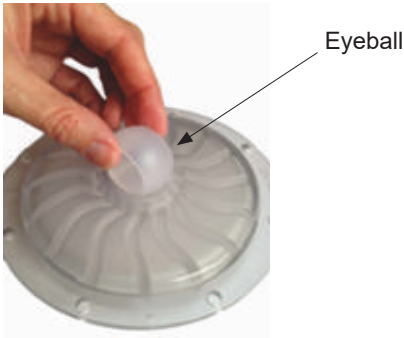

15. Before operating the ColorVision light, fill the pool with water until the light is completely submerged.

    Note: The ColorVision light should not be powered for more than 30 seconds if not submersed in water.

16. **Final check for proper ColorVision light operation:** Switch on the main switch or circuit breaker to the 12 VAC transformer and the switch that operates the GloBrite light itself. The light should illuminate when the 12 VAC power is applied. If not recheck the installation steps.

WINTERIZING COLORVISION LIGHT ASSEMBLY

1. Drain the pool water level down below the ColorVision Light.
2. Remove the ColorVision light lens.
3. Blow out the water line.
4. Install ColorVision light lens.
5. Remove the eyeball from the lens.
6. Install the rubber expansion plug in center hole of lens. Be sure to use a straight wall expansion plug to seal on the underside of the lens.

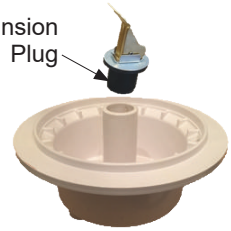

Lens with eyeball removed

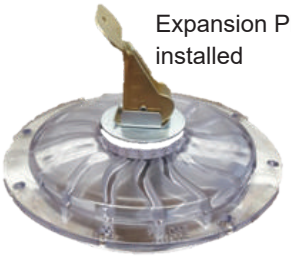

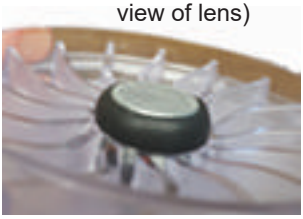

PRESSURE TESTING COLORVISION LIGHT ASSEMBLY

To pressure test the ColorVision Light assembly, you must seal the GloBrite® Light conduit with either an installed GloBrite light or rubber expansion plug. Caution: If using a GloBrite Light to seal the electrical conduit, it is advised to use an old failed GloBrite Light as the pressure testing may damage a functioning GloBrite light.

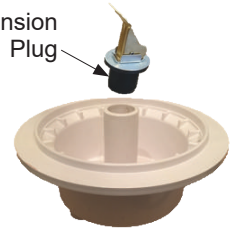

Lens with eyeball removed

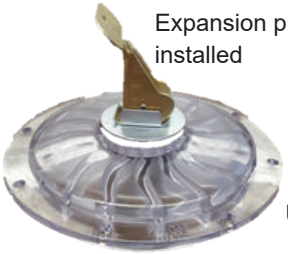

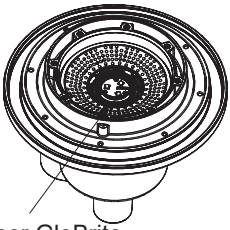

Use either GloBrite light (shown) or expansion plug

To seal the ColorVision Light assembly you can use the gunite cover with the installed o-ring or you can install the lens with an installed O-ring and plug the center hole with a rubber expansion plug.

Note: If using a rubber expansion plug, it must be a straight walled plug in order to seal properly on the underside of the lens.

CONNECTING COLORVISION LIGHTS TO THE AUTOMATION CONTROL SYSTEM

DANGER **RISK OF ELECTRICAL SHOCK OR ELECTROCUTION**
Always disconnect AC power to Control System load center at the circuit breaker before servicing, or removing the **HIGH VOLTAGE FRONT PANEL**. Failure to do so could result in death or serious injury to installer, service person, pool users, or others due to electrical shock.

1. **Load Center:** Unlatch the enclosure door spring latch, and open the door.
2. **Discharge Electrostatic energy before removing the cover by first touching the metal part of the enclosure.**
3. Loosen the two retaining screws from the HIGH VOLTAGE FRONT PANEL. Remove the panel from the enclosure.
4. Run the GloBrite color light power cord to an Auxiliary Relay in the Control System load center.
5. Connect the 120 Volt side of a 12 VAC transformer to the LOAD SIDE of one of the auxiliary (AUX) relays in the load center.
6. Connect the Neutral conductor from the 12 VAC transformer to the Neutral bus bar in the load center.
7. After the connection has been completed, close the control panel and secure it with the two retaining screws.
8. Close the load center front door. Fasten the spring latch.

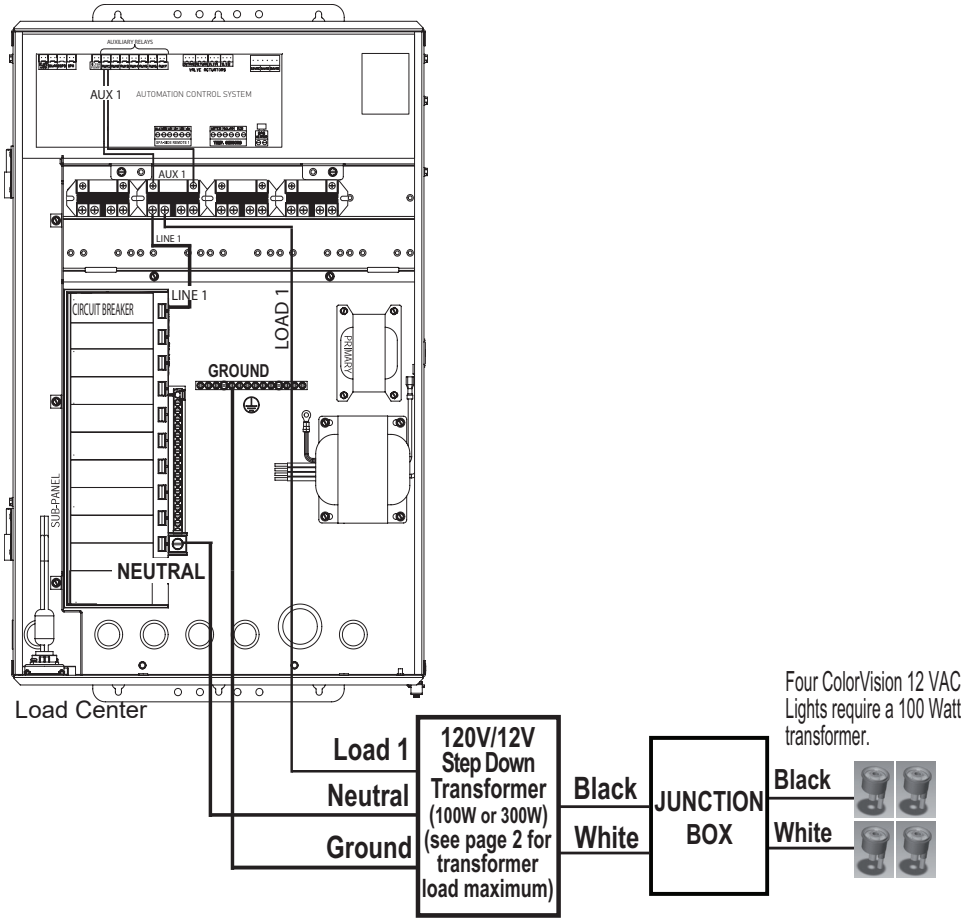

Automation Load Center Wiring Connection Diagram

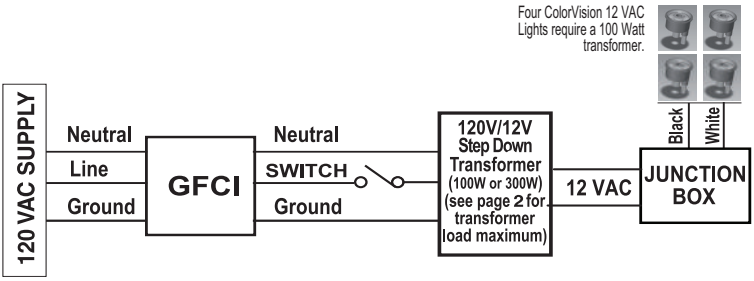

ColorVision Light Standard 12 VAC Wiring Connection Diagram (NO GFCI REQUIRED)

APPENDIX
ACCESSORIES BAG ASSEMBLY INSTRUCTIONS

ColorVision Light Accessories Bag Assembly Contents

It is recommended as an initial setup to use the 3/4-inch eyeball. However, you should use the eyeball size that better suits the flow rate, water depth, and desired plume height. To increase the plume height, use the smaller eyeball.

Eyeball Assembly Installation and Replacement Instructions

Eyeball Assembly Installation

1. Insert the eyeball perpendicular into the slots in the lens opening.

2. Rotate to center the eyeball into the lens eyeball housing being sure the inside lip of the eyeball is facing up.

Eyeball Replacement

1. Rotate the eyeball, and align it to the slots in the lens opening.
2. Pull the eyeball out of the lens.
3. Insert the alternate size eyeball perpendicular, into the slots in the lens opening.
4. Rotate and center the eyeball into the lens.

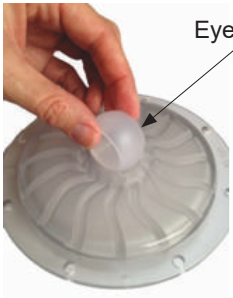

COLORVISION LIGHT EXTENDED NOZZLE INSTALLATION INSTRUCTIONS

The flexible nozzle is recommended in cases where the plume from the ColorVision Light tends to swirl around. The swirling effect is usually caused by a wave action in the body of water. This flexible nozzle is designed to protect the jet water as it reaches the surface and protects it from the wave action.

Light Extension Nozzle Installation

1. Insert the 3/4-inch eyeball into the lens as described in “Eyeball Replacement” above.
2. Pull the rubber nozzle through the eyeball opening until it locks in place.

3. Install an O-ring on the lens and install the lens over the top of the niche using the supplier machine screws. Secure the lens with the eight 8-32 x 1/2-inch machine screws (provided), see Figure 2 on page 6. Using a No. 2 Philips head screwdriver, tighten each retaining screw to 10 (minimum) - 15 (maximum) in-lbs to secure the lens on the niche. DO NOT OVER TIGHTEN THE SCREWS. DO NOT ASSEMBLE WITH POWER TOOLS. Over tightening or using a motorized screwdriver on the lens screws can over torque the screw threads and damage the niche housing and/or lens.

Note: It is recommended to custom cut the flexible nozzle once it is installed into the pool. Start off by cutting 1-inch at a time until you get the desired plume and the swirling has stopped. The flexible nozzle is directional so it can be adjusted for proper water flow to the surface.

ColorVision Light Water Depth and Plume Height Chart

Plume height data should only be used as a reference, actual plume height may vary based upon a variety of circumstances including but not limited to system plumbing and water conditions.

	WATER DEPTH									
	2”		4”		6”		8”		10”	
	NOZZLE DIAMETER									
GPM	1/2”	3/4”	1/2”	3/4”	1/2”	3/4”	1/2”	3/4”	1/2”	3/4”
15		20”	42”	11”	28”	8”	14”	6”	12”	4”
20		32”		18”		12”	24”	8”	16”	8”
25				26”		18”		12”	23”	10”
30						25”		16”		14”
35								24”		18”
40								30”		22”
45										26”

	WATER PRESSURE (PSI)									
	2”		4”		6”		8”		10”	
	NOZZLE DIAMETER									
GPM	1/2”	3/4”	1/2”	3/4”	1/2”	3/4”	1/2”	3/4”	1/2”	3/4”
15		0	10	0	12	0	9.8	0	11	0.4
20		0.6		0.8		0.2	16	0.4	18	1.2
25				2		2		2	30	2
30						3.8		3.4		4.2
35								6		6.4
40								8.4		8.4
45										11

ColorVision Light Niche Dimensions

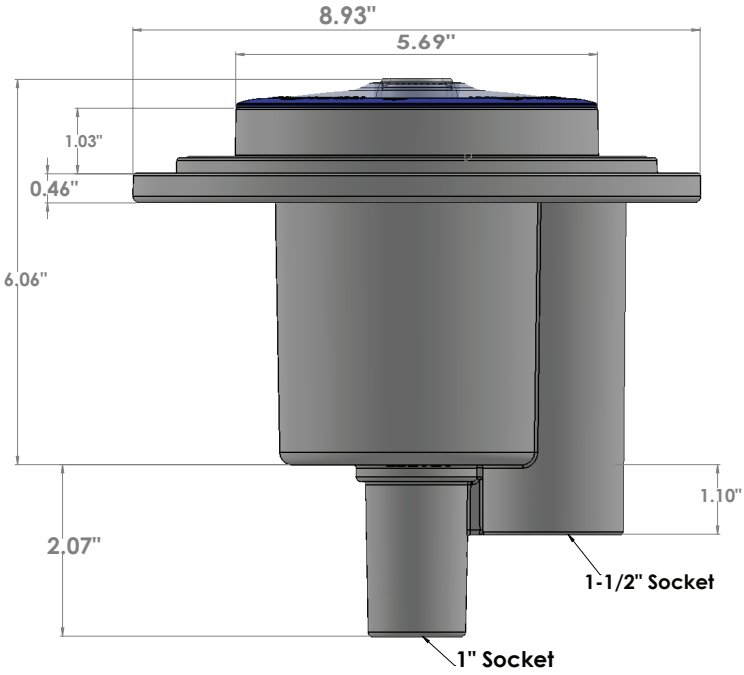

ColorVision Light Replacement Parts List

Item	Part No.	Description
1	590103z	Diffuser
2	590104z	Lens with O-Ring
3	590107z	Gasket Kit, 3 Gaskets
4	590118z	O-Ring
5	590119z	Screw Kit Lens
6	590105z	Color Ring - White
6	590128z	Color Ring - Blue
6	590127z	Color Ring - Grey
6	590129z	Color Ring - Tan
6	590130z	Color Ring - Black
7	590135	Eyeball Assy Kit
8	590109z	Vinyl Spacer
9	590102z	Gunite Cover with O-Ring
10	590106z	Vinyl/Fiberglass Ring - White
10	590132z	Vinyl/Fiberglass Ring - Blue
10	590131z	Vinyl/Fiberglass Ring - Grey
10	590133z	Vinyl/Fiberglass Ring - Tan
10	590134z	Vinyl/Fiberglass Ring - Black
11	590121z	Screw Kit Vinyl/Fiberglass Ring
12	590147z	Niche

ColorVision Light Accessories

Accessory P/N 580068

P/N	Description	Qty.
20070C	EYEBALL FITTING, CLEAR	1
542603	EYEBALL, CLEAR	1
590102	LID, CONCRETE	1
590103	DIFFUSER	1
590104	LENS	1
590105	COLOR RING, WHITE	1
590108	FLEX NOZZLE, WHITE	1
590118	O-RING	1
590119	SCREW, MACHINE 8-32 x 1/2-INCH, PHILLIPS, 316 SS	8

Accessory P/N 580067

P/N	Description	Qty.
20070C	EYEBALL FITTING, CLEAR	1
542603	EYEBALL, CLEAR	1
590102	LID, CONCRETE	1
590103	DIFFUSER	1
590104	LENS	1
590105	COLOR RING, WHITE	1
590106	LOCK RING, FIBERGLASS	1
590107	GASKET/SEAL, GB COLORCASCADE	3
590108	FLEX NOZZLE, WHITE	1
590109	VINYL SPACER	1
590118	O-RING	1
590119	SCREW, MACHINE 8-32 x 1/2-INCH, PHILLIPS, 316 SS	8
590121	SCREW, THREAD FORMING 8-18 x 1-INCH, PHILLIPS, 316 SS	8
590148	SCREW THREAD FORMING 8-18 x 1/2-INCH, PHILLIPS, 316 SS	2

ColorVision Light Replacement Illustrated Parts List

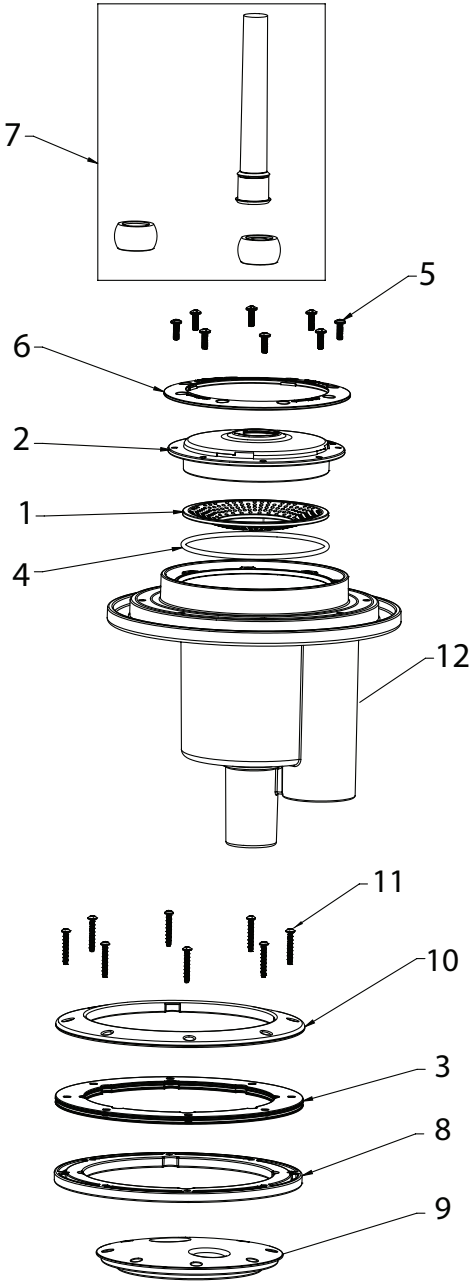

NOTES

NOTES

1620 HAWKINS AVE., SANFORD, NC 27330 • (919) 566-8000
10951 WEST LOS ANGELES AVE., MOORPARK, CA 93021 • (805) 553-5000

All indicated Pentair trademarks and logos are property of Pentair. Third party registered and unregistered trademarks and logos are the property of their respective owners.

© 2023 Pentair. All rights reserved. WWW.PENTAIR.COM

P/N 512280 REV. E 12/19/23