RDI Systems

2915 Tennessee Avenue North, Parsons, TN 38363
(731) 847-6361*(800) 826-7036*
A Welbilt Brand

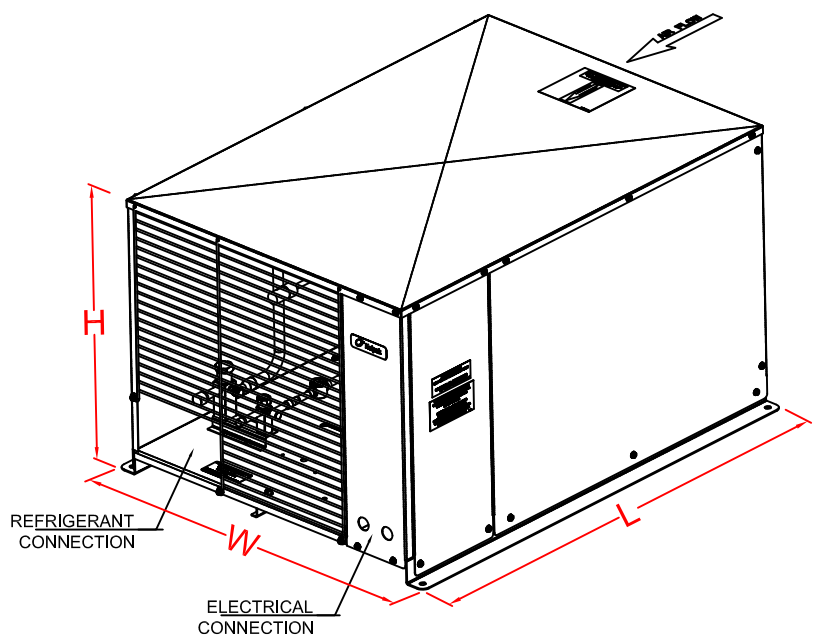

CONDENSING UNIT ASSY

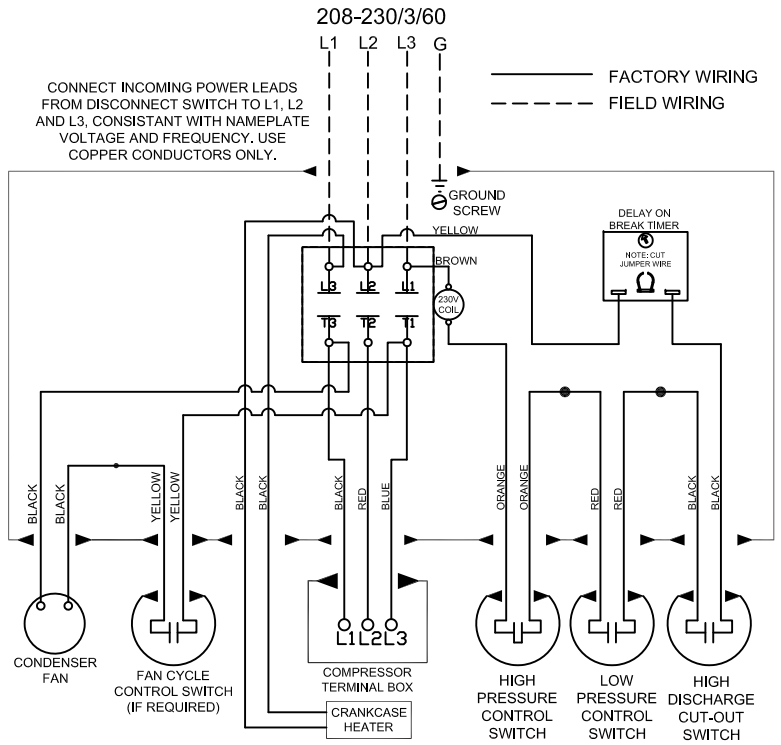

WIRING DIAGRAM 208-230/3/60

BTUH CAPACITIES

Evap Temp		-30°F	-25°F	-20°F	-15°F	-10°F	-5°F
AMBIENT	90°F	5,730	6,500	7,320	8,200	9,160	10,200
	95°F	5,480	6,210	6,990	7,830	8,730	9,720
	100°F	5,230	5,930	6,670	7,460	8,310	9,230
	105°F	4,990	5,650	6,350	7,090	7,890	8,750
	110°F	4,770	5,390	6,050	6,470	7,480	8,280

PHYSICAL, DIMENSIONS, & WEIGHT DATA

Length (L)	Width (W)	Height (H)	Refrigerant Charge (lbs.)	Rec. Cap 90% (lbs.)	Total Heat Rejected - BTUH	Ship Weight
33.0"	25.5"	19.25"	6.5	10.4	14,595	177

CONDENSING UNIT ELECTRICAL DATA

Compressor RLA	Compressor LRA	Cond Fan Mtr FLA	Total Cond Unit Amps	MCA	MOPD (Max Fuse)
8.6	58.0	1.2	10.1	12.3	20

CONNECTION SIZES

Suction Line	Liquid Line	Water Inlet	Water Outlet
7/8" OD	3/8" OD	N/A	N/A

ITEMS SERVED

Item Number(s)	Description

ITEMS PROVIDED INCLUDE:
1. Air Cooled Condensers
2. PSC Cond Fan Motors
3. Liquid Line Sight Glass
4. Liquid Line Filter Drier
5. Head Pressure Control-Fan Cycle
6. Scroll Compressors-Copeland
7. Crankcase Heaters
8. Refrigerant Base Valves
9. Oversized Receiver Tank
10. Hi/Lo Pressure Controls
11. Electric Defrost Timer (Shipped Loose)
12. Outdoor Housing-Galvanized Steel

PC199LZOP-3E AIR COOLED CONDENSING UNIT — AWEF: 3.15

GENERAL INFORMATION

Refrigerant	Voltage	Phase	Hz	Compressor Type	Compressor Model	HP
R404A	208-230	3	60	Scroll	ZF07KAE	2.0