# RDI Systems

2915 Tennessee Avenue North, Parsons, TN 38363
(731) 847-6361*(800) 826-7036*
A Welbilt Brand

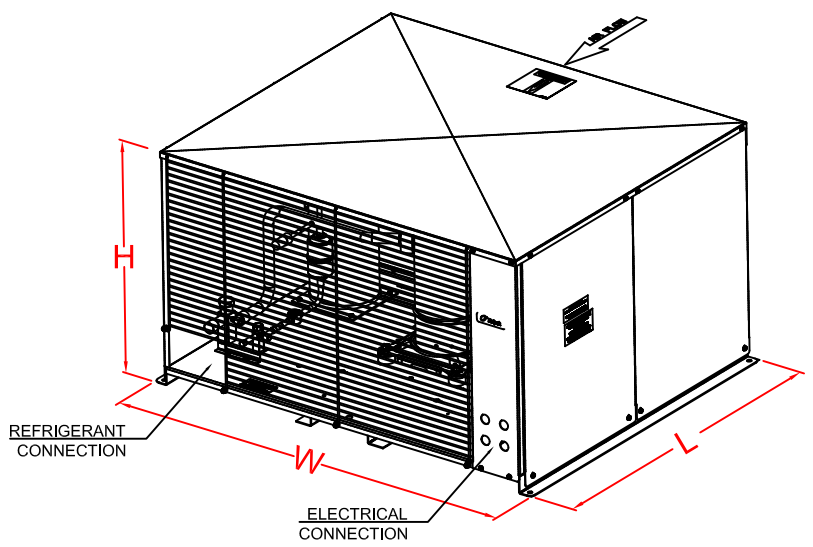


CONDENSING UNIT ASSEMBLY

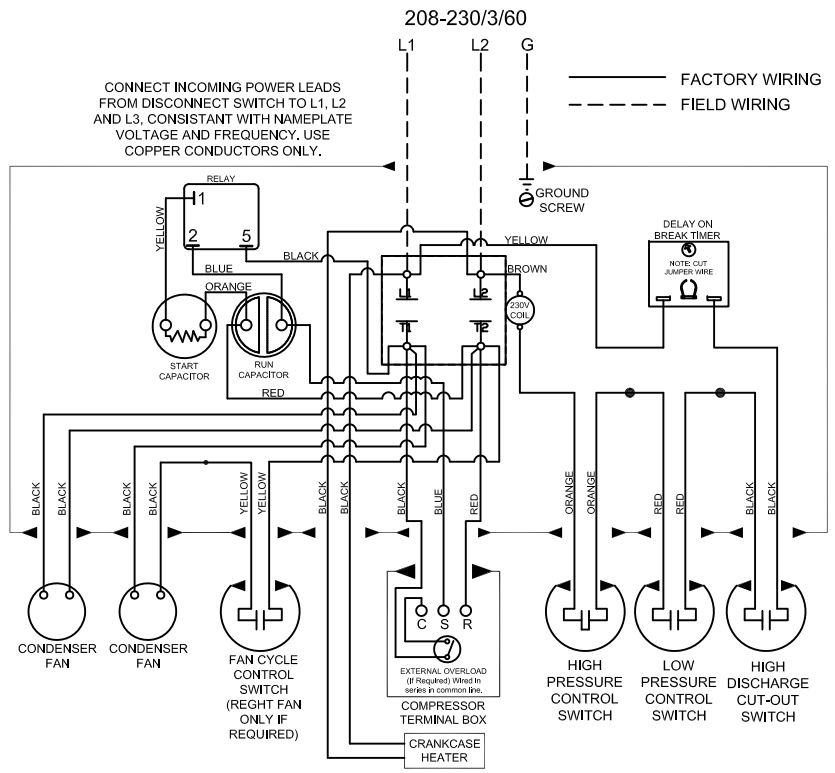


WIRING DIAGRAM 208-230/1/60

## BTUH CAPACITIES

| Evap Temp | | -30°F | -25°F | -20°F | -15°F | -10°F | -5°F |
|---|---|---|---|---|---|---|---|
| AMBIENT | 90°F | 7,290 | 8,230 | 9,270 | 10,400 | 11,600 | 13,000 |
| | 95°F | 6,960 | 7,860 | 8,850 | 9,920 | 11,100 | 12,400 |
| | 100°F | 6,620 | 7,480 | 8,410 | 9,430 | 10,500 | 11,700 |
| | 105°F | 6,270 | 7,080 | 7,960 | 8,920 | 9,960 | 11,100 |
| | 110°F | 5,910 | 6,670 | 7,500 | 8,400 | 9,370 | 10,400 |

## PHYSICAL DIMENSIONS & WEIGHT DATA

| Length (L) | Width (W) | Height (H) | Refrigerant Charge (lbs.) | Rec. Cap 90% (lbs.) | Total Heat Rejected-BTUH | Ship Weight |
|---|---|---|---|---|---|---|
| 33.0" | 40.125" | 22.25" | 7.0 | 13.6 | 18,700 | 213 |

## CONDENSING UNIT ELECTRICAL DATA

| Compressor RLA | Compressor LRA | Cond Fan Mtr FLA | Total Cond Unit Amps | MCA | MOPD (Max Fuse) |
|---|---|---|---|---|---|
| 16.4 | 73.0 | 2.4 | 19.1 | 23.2 | 35 |

## CONNECTION SIZES

| Suction Line | Liquid Line | Water Inlet | Water Outlet |
|---|---|---|---|
| 7/8" OD | 3/8" OD | N/A | N/A |

## ITEMS SERVED

| Item Number(s) | Description |
|---|---|
| | |

ITEMS PROVIDED INCLUDE:
1. Air Cooled Condensers
2. PSC Cond Fan Motors
3. Liquid Line Sight Glass
4. Liquid Line Filter Drier
5. Head Pressure Control-Fan Cycle
6. Scroll Compressors-Copeland
7. Crankcase Heaters
8. Refrigerant Base Valves
9. Oversized Receiver Tank
10. Hi/Lo Pressure Controls
11. Electric Defrost Timer (Shipped Loose)
12. Outdoor Housing-Galvanized Steel

PC249LZOP-2E AIR COOLED CONDENSING UNIT | AWEF: 3.15

## GENERAL INFORMATION

| Refrigerant | Voltage | Phase | Hz | Compressor Type | Compressor Model | HP |
|---|---|---|---|---|---|---|
| R404A | 208-230 | 1 | 60 | Scroll | ZF08KAE | 2-1/2 |