RDI Systems

2915 Tennessee Avenue North, Parsons, TN 38363
(731) 847-6361*(800) 826-7036*
A Welbilt Brand

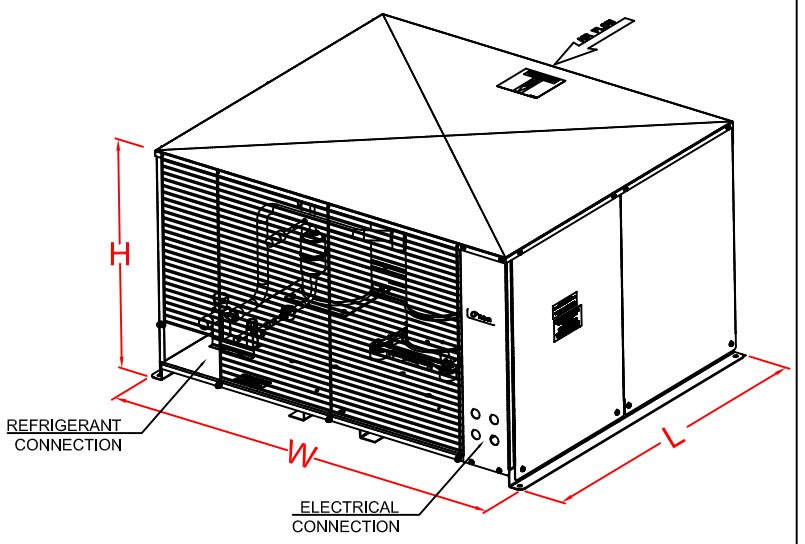

HOUSING DETAIL

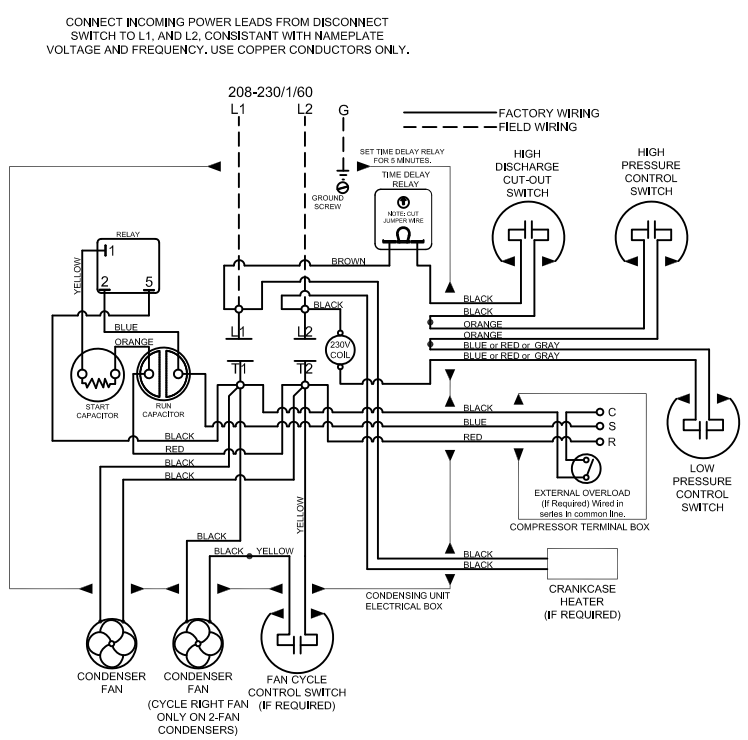

WIRING DIAGRAM 208-230/1/60

BTUH CAPACITIES

EVAP TEMP		10° F	15° F	20° F	25° F	30° F
AMBIENT	90°F	16,800	18,750	20,900	23,200	25,700
	95°F	16,100	17,950	20,000	22,200	24,700
	100°F	15,400	17,200	19,150	21,300	23,600
	105°F	14,700	16,350	18,250	20,300	22,500
	110°F	13,950	15,550	17,300	19,750	21,400

PHYSICAL, DIMENSIONS, & WEIGHT DATA

Length (L)	Width (W)	Height (H)	Refrigerant Charge (lbs.)	Rec. Cap 90% (lbs.)	Total Heat Rejected-BTUH	Ship Weight
33.0"	40.125"	22.25"	11.0	13.7	32,320	214

CONDENSING UNIT ELECTRICAL DATA

Compressor RLA	Compressor LRA	Cond Fan Mtr FLA	Total Cond Unit Amps	MCA	MOPD (Max Fuse)
18.0	75.0	2.4	20.6	25.1	40

PC249MZOP-2E AIR COOLED CONDENSING UNIT | AWEF: 7.6

GENERAL INFORMATION

Refrigerant	Voltage	Phase	Hz	Compressor Type	Compressor Model	HP
R404A	208-230	1	60	Scroll	ZS19KAE	2.5

CONNECTION SIZES

Suction Line	Liquid Line	Water Inlet	Water Outlet
7/8" OD	3/8" OD	N/A	N/A

ITEMS SERVED

Item Number(s)	Description

ITEMS PROVIDED INCLUDE:
1. Air Cooled Condensers
2. PSC Cond Fan Motors
3. Liquid Line Sight Glass
4. Liquid Line Filter Drier
5. Head Pressure Control-Fan Cycle
6. Scroll Compressors-Copeland
7. Crankcase Heaters
8. Refrigerant Base Valves
9. Oversized Receiver Tank
10. Hi/Lo Pressure Controls
11. Outdoor Housing-Galvanized Steel