RDI Systems

2915 Tennessee Avenue North, Parsons, TN 38363
(731) 847-6361*(800) 826-7036*
A Welbilt Brand

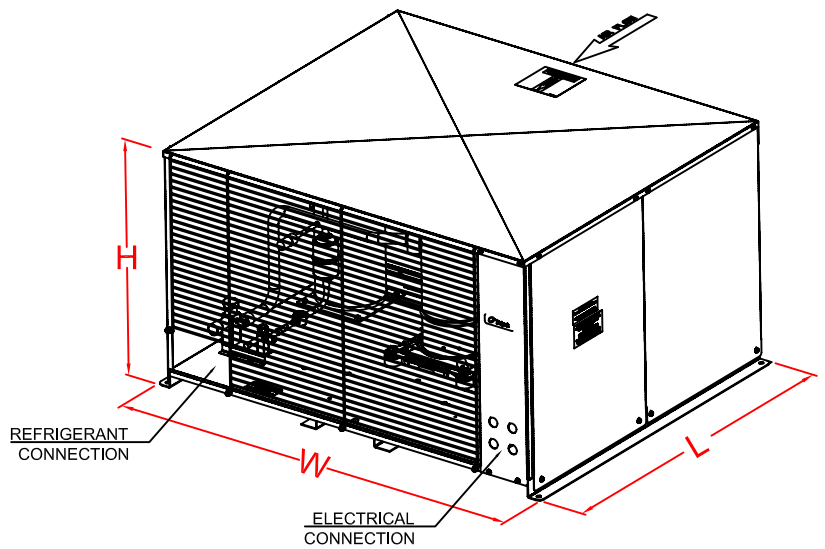

CONDENSING UNIT ASSEMBLY

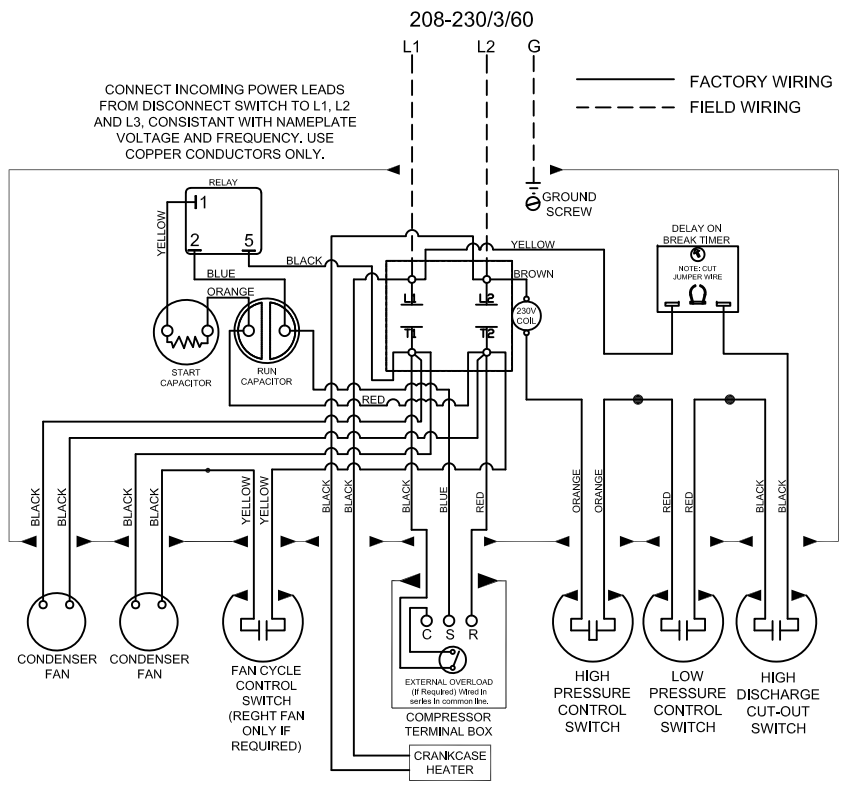

WIRING DIAGRAM (208-230/1/6)

BTUH CAPACITIES

Evap Temp		-30°F	-25°F	-20°F	-15°F	-10°F	-5°F
AMBIENT	90°F	8,130	9,180	10,300	11,500	12,900	14,400
	95°F	7,770	8,770	9,850	11,000	12,300	13,700
	100°F	7,400	8,350	9,370	10,500	11,700	13,000
	105°F	7,020	7,920	8,880	9,920	11,100	12,300
	110°F	6,630	7,470	8,380	9,360	10,400	11,600

PHYSICAL, DIMENSIONS, & WEIGHT DATA

Length (L)	Width (W)	Height (H)	Refrigerant Charge (lbs.)	Rec. Cap 90% (lbs.)	Total Heat Rejected-BTUH	Ship Weight
33.0"	40.125"	22.25"	7.4	13.6	19,730	230

CONDENSING UNIT ELECTRICAL DATA

Compressor RLA	Compressor LRA	Cond Fan Mtr FLA	Total Cond Unit Amps	MCA	MOPD (Max Fuse)
14.3	88.0	2.4	17.0	20.6	30

CONNECTION SIZES

Suction Line	Liquid Line	Water Inlet	Water Outlet
7/8" OD	3/8" OD	N/A	N/A

ITEMS SERVED

Item Number(s)	Description

ITEMS PROVIDED INCLUDE:
1. Air Cooled Condensers
2. PSC Cond Fan Motors
3. Liquid Line Sight Glass
4. Liquid Line Filter Drier
5. Head Pressure Control-Fan Cycle
6. Scroll Compressors-Copeland
7. Crankcase Heaters
8. Refrigerant Base Valves
9. Oversized Receiver Tank
10. Hi/Lo Pressure Controls
11. Electric Defrost Timer (Shipped Loose)
12. Outdoor Housing-Galvanized Steel
13. Pressure Relief Valve (Factory Mtd.)

PC299LZOP-2E AIR COOLED CONDENSING UNIT | AWEF: 3.15

GENERAL INFORMATION

Refrigerant	Voltage	Phase	Hz	Compressor Type	Compressor Model	HP
R404A	208-230	1	60	Scroll	ZF09KAE	3.0