RDI Systems

2915 Tennessee Avenue North, Parsons, TN 38363
(731) 847-6361*(800) 826-7036*
A Welbilt Brand

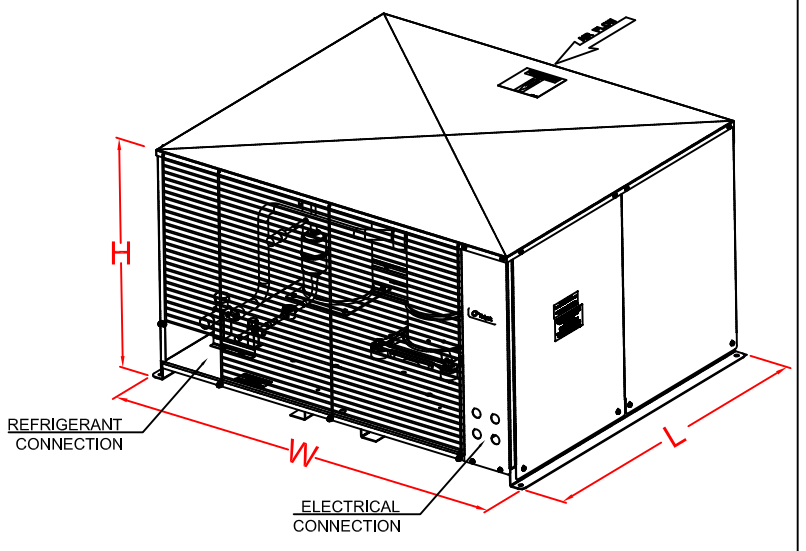

HOUSING DETAIL

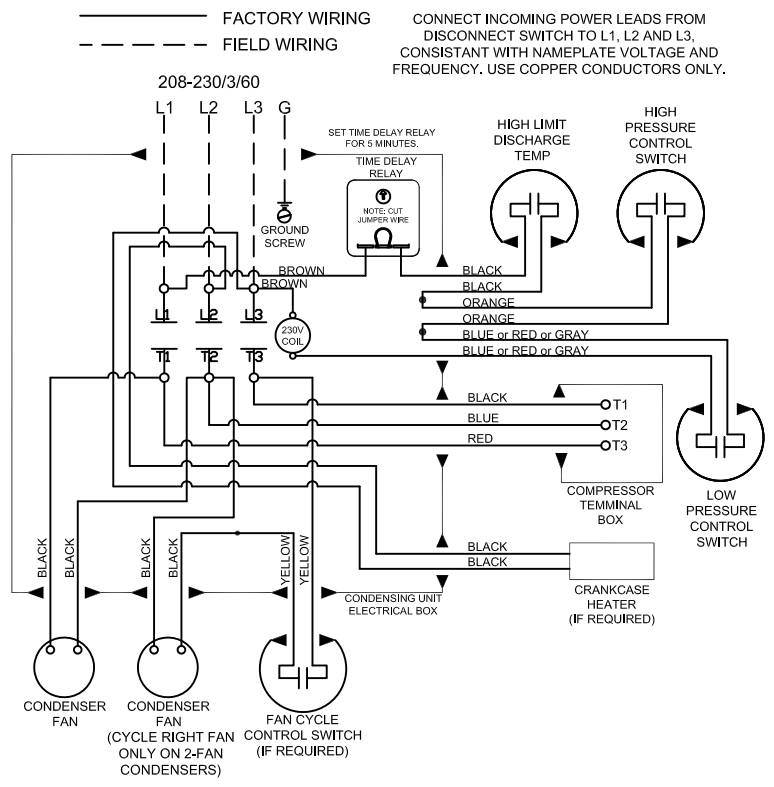

SCROLL WIRING DIAGRAM 208-230/3/60

BTUH CAPACITIES

EVAP TEMP		10° F	15° F	20° F	25° F	30° F
AMBIENT	90°F	22,500	25,100	27,900	31,100	34,500
	95°F	21,600	24,100	26,800	29,800	33,100
	100°F	20,600	23,000	25,600	28,500	31,600
	105°F	19,700	21,900	24,400	27,100	30,200
	110°F	18,650	20,800	23,200	25,800	28,600

PHYSICAL DIMENSIONS & WEIGHT DATA

Length (L)	Width (W)	Height (H)	Refrigerant Charge (lbs.)	Rec. Cap 90% (lbs.)	Total Heat Rejected-BTUH	Ship Weight
33.0"	40.125"	22.25"	10.5	13.7	42,540	216

CONDENSING UNIT ELECTRICAL DATA

Compressor RLA	Compressor LRA	Cond Fan Mtr FLA	Total Cond Unit Amps	MCA	MOPD (Max Fuse)
15.5	93.0	2.4	17.8	21.6	35

PC299MZOP-3E AIR COOLED CONDENSING UNIT | AWEF: 7.6

GENERAL INFORMATION

Refrigerant	Voltage	Phase	Hz	Compressor Type	Compressor Model	HP
R404A	208-230	3	60	Scroll	ZS21KAE	3.0

CONNECTION SIZES

Suction Line	Liquid Line	Water Inlet	Water Outlet
7/8" OD	3/8" OD	N/A	N/A

ITEMS SERVED

Item Number(s)	Description

ITEMS PROVIDED INCLUDE:

1. Air Cooled Condensers
2. PSC Cond Fan Motors
3. Liquid Line Sight Glass
4. Liquid Line Filter Drier
5. Head Pressure Control-Fan Cycle
6. Scroll Compressors-Copeland
7. Crankcase Heaters
8. Refrigerant Base Valves
9. Oversized Receiver Tank
10. Hi/Lo Pressure Controls
11. Outdoor Housing-Galvanized Steel