RDI Systems

2915 Tennessee Avenue North, Parsons, TN 38363
(731) 847-6361*(800) 826-7036*
A Welbilt Brand

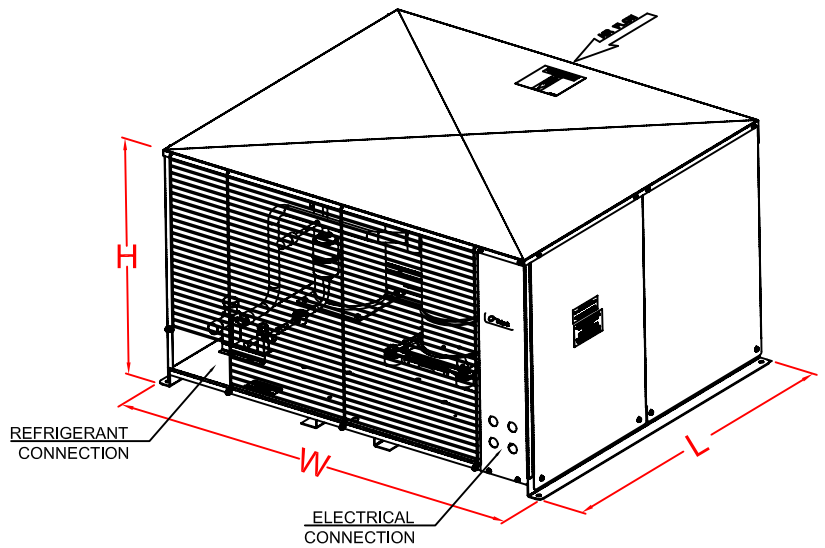

CONDENSING UNIT ASSEMBLY

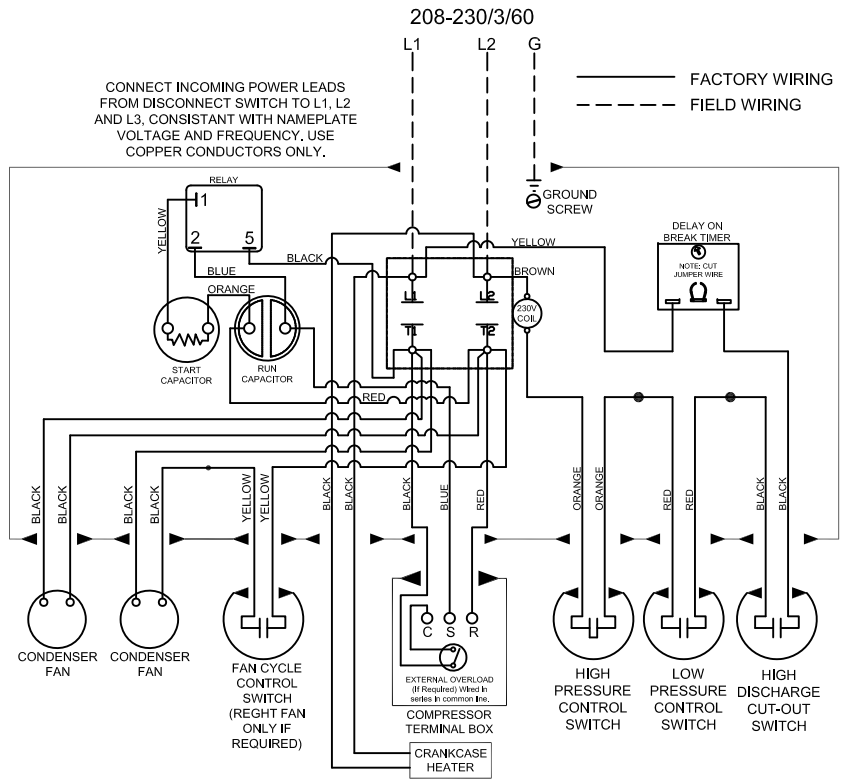

WIRING DIAGRAM (208-230/1/6)

BTUH CAPACITIES

Evap Temp		-30°F	-25°F	-20°F	-15°F	-10°F	-5°F
AMBIENT	90°F	10,100	11,400	12,800	14,400	16,100	17,900
	95°F	9,660	10,900	12,300	13,700	15,300	17,100
	100°F	9,200	10,400	11,700	13,000	14,600	16,200
	105°F	8,720	9,820	11,000	12,300	13,800	15,300
	110°F	8,220	9,250	10,400	11,600	12,900	14,400

PHYSICAL DIMENSIONS & WEIGHT DATA

Length (L)	Width (W)	Height (H)	Refrigerant Charge (lbs.)	Rec. Cap 90% (lbs.)	Total Heat Rejected-BTUH	Ship Weight
33.0"	40.125"	22.25"	10.5	13.6	23,290	230

CONDENSING UNIT ELECTRICAL DATA

Compressor RLA	Compressor LRA	Cond Fan Mtr FLA	Total Cond Unit Amps	MCA	MOPD (Max Fuse)
16.3	109.0	2.4	19.0	23.1	35

CONNECTION SIZES

Suction Line	Liquid Line	Water Inlet	Water Outlet
7/8" OD	3/8" OD	N/A	N/A

ITEMS SERVED

Item Number(s)	Description

ITEMS PROVIDED INCLUDE:
1. Air Cooled Condensers
2. PSC Cond Fan Motors
3. Liquid Line Sight Glass
4. Liquid Line Filter Drier
5. Head Pressure Control-Fan Cycle
6. Scroll Compressors-Copeland
7. Crankcase Heaters
8. Refrigerant Base Valves
9. Oversized Receiver Tank
10. Hi/Lo Pressure Controls
11. Electric Defrost Timer (Shipped Loose)
12. Outdoor Housing-Galvanized Steel

PC349LZOP-2E AIR COOLED CONDENSING UNIT | AWEF: 3.15

GENERAL INFORMATION

Refrigerant	Voltage	Phase	Hz	Compressor Type	Compressor Model	HP
R404A	208-230	1	60	Scroll	ZF11K4E	3-1/2