RDI Systems

2915 Tennessee Avenue North, Parsons, TN 38363
(731) 847-6361*(800) 826-7036*
A Welbilt Brand

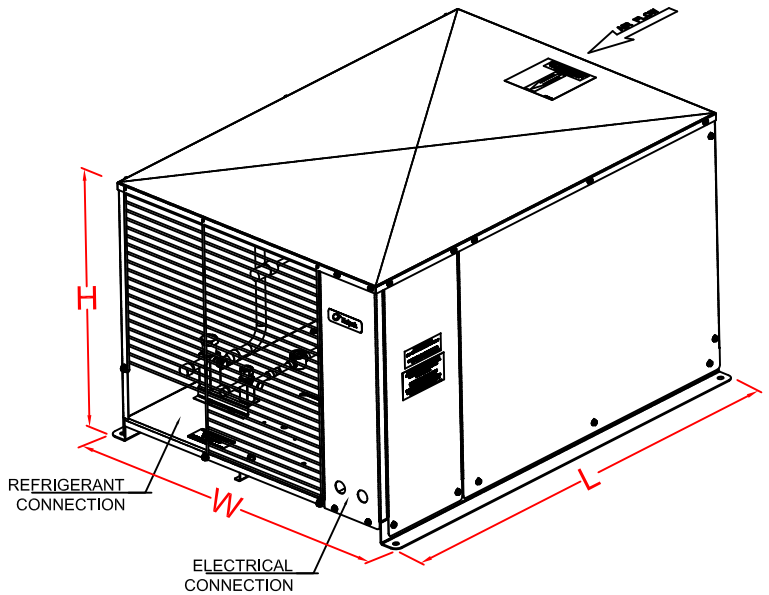

CONDENSING UNIT ASSY

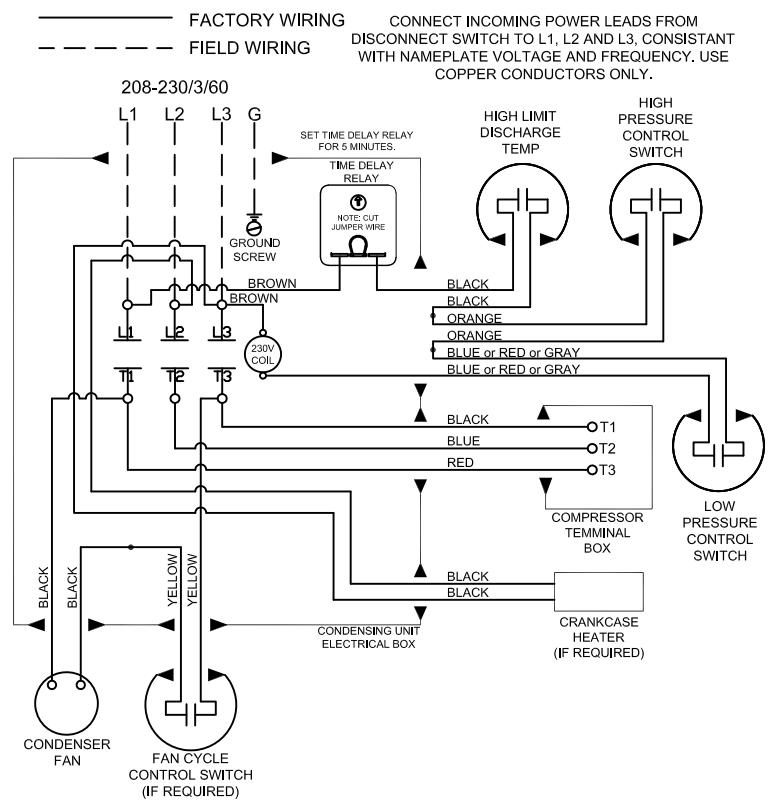

SCROLL WIRING DIAGRAM 208-230/3/60

BTUH CAPACITIES

EVAP TEMP		10° F	15° F	20° F	25° F	30° F
AMBIENT	90°F	6,760	7,590	8,510	9,520	10,650
	95°F	6,500	7,290	8,160	9,110	10,150
	100°F	6,250	7,000	7,810	8,710	9,700
	105°F	5,590	6,700	7,460	8,300	9,230
	110°F	5,740	6,400	7,110	7,900	8,760

PHYSICAL, DIMENSIONS, & WEIGHT DATA

Length (L)	Width (W)	Height (H)	Refrigerant Charge (lbs.)	Rec. Cap 90% (lbs.)	Total Heat Rejected-BTUH	Ship Weight
33.0"	25.5"	19.25"	5.5	5.8	13,340	152

CONDENSING UNIT ELECTRICAL DATA

Compressor RLA	Compressor LRA	Cond Fan Mtr FLA	Total Cond Unit Amps	MCA	MOPD (Max Fuse)
5.2	37.8	0.5	5.9	7.2	15

PC69MZOP-3E AIR COOLED CONDENSING UNIT | AWEF: 7.6

GENERAL INFORMATION

Refrigerant	Voltage	Phase	Hz	Compressor Type	Compressor Model	HP
R404A	208-230	3	60	Scroll	ZB07KAE	3/4

CONNECTION SIZES

Suction Line	Liquid Line	Water Inlet	Water Outlet
5/8" OD	3/8" OD	N/A	N/A

ITEMS SERVED

Item Number(s)	Description

ITEMS PROVIDED INCLUDE:
1. Air Cooled Condensers
2. PSC Cond Fan Motors
3. Liquid Line Sight Glass
4. Liquid Line Filter Drier
5. Head Pressure Control-Fan Cycle
6. Scroll Compressors-Copeland
7. Crankcase Heaters
8. Refrigerant Base Valves
9. Oversized Receiver Tank
10. Hi/Lo Pressure Controls
11. Outdoor Housing-Galvanized Steel