ABOVE GROUND

POOL AND SPA HEATERS

RUGGED-STEEL CONSTRUCTION

ENERGY EFFICIENT

EASY TO USE CONTROLS

Raypak®
A Rheem® Company

Model 106 - 105kbtu

Analog Control

The round manual thermostat is the world's most popular thermostat - installed in just about every appliance and automobile for years. The Raypak analog thermostat provides precise and accurate performance with the ease of use that you've grown accustomed to - simply turn the dial to the desired temperature and let the thermostat take over. The pool thermostat is the nerve center of your pool heating system. It's the main control point that determines when and how much heat will be produced by the pool heater to achieve the desired comfort level of your pool. But for all its simplicity, it is actually a state of the art electronic control that is built to withstand the test of time without any mechanical parts to break down and wear out. It really is the best of both worlds, simple operation with electronic accuracy and safety.

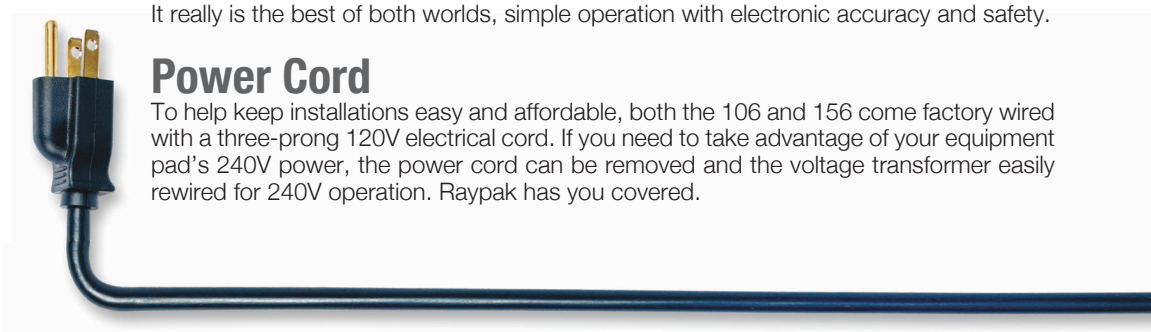

Power Cord

To help keep installations easy and affordable, both the 106 and 156 come factory wired with a three-prong 120V electrical cord. If you need to take advantage of your equipment pad's 240V power, the power cord can be removed and the voltage transformer easily rewired for 240V operation. Raypak has you covered.

Burner Tray

Items Common to Both Units

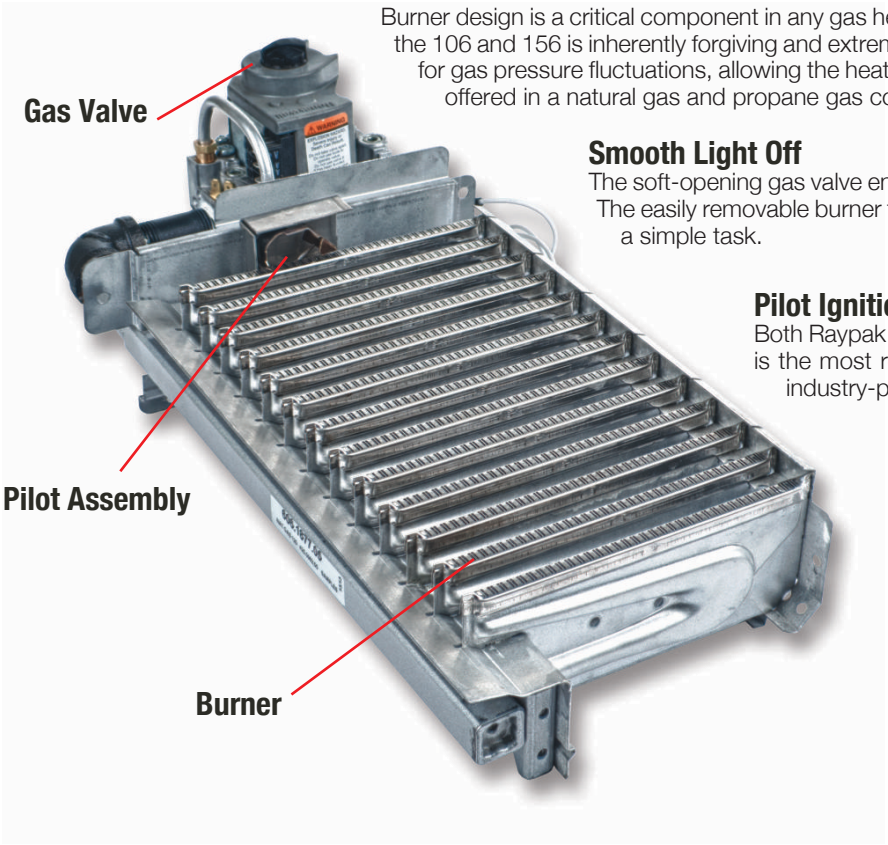

Stainless Steel Burners

Burner design is a critical component in any gas heater. The stainless steel hybrid burner system used in the 106 and 156 is inherently forgiving and extremely robust. The burner is self-adjusting to compensate for gas pressure fluctuations, allowing the heater to always burn clean and safe. The 106 and 156 are offered in a natural gas and propane gas configurations.

Smooth Light Off

The soft-opening gas valve ensures smooth turn-on; no "Hard Light" to worry about. The easily removable burner tray and pilot assembly make service and maintenance a simple task.

Pilot Ignition

Both Raypak 106 and 156 use a spark-to-pilot ignition system. This is the most reliable and robust ignition system available today–an industry-proven standard for over 30 years.

Model 156 - 150kbtu

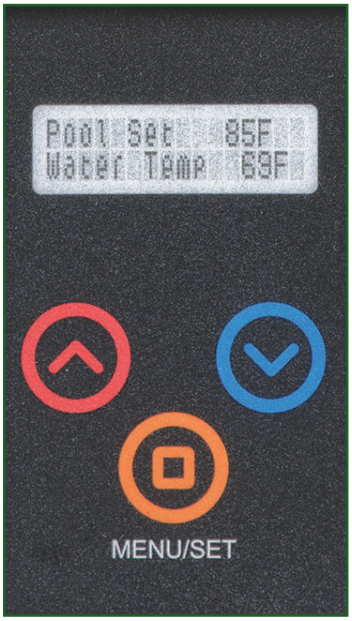

Digital Control

Microprocessor-Controlled Thermostat

Spa Set 104F
Heating

The Raypak 156 gas heater is equipped with a microprocessor-based control. This control allows you to set your pool and spa temperature precisely at your preferred setting just by pressing an up or down temperature control button. The digital display tells you when the water is being heated and notifies you when your target temperature has been reached.

Spa Set 104F
No Demand

Self-Diagnostic

Spa Set 104F
No Pilot Sensed

Troubleshooting a Raypak gas heater has never been easier. The Raypak 156 has on-board diagnostic controls that let the user and the service professional know what is going on with the heater at all times. The display uses real English, with no cryptic codes to decipher.

Remote-Compatible

Remote Pool
Water Temp 69F

The Raypak 156 is compatible with most major pool control and remote systems on the market today. Any two- or three-wire remote can connect to the Raypak Digital and be integrated into the pool control system of your choice. The display clearly shows the heater is under the control of a remote system.

Items Common to Both Units

Heat Exchanger

Copper Fin Tube - Residential

The Raypak 106 and 156 are built to last by using the highest quality integral copper fin tube available. Copper is well known for its ability to transfer heat efficiently, and is the first choice for pool and spa heat exchanger construction. Pure copper has stood the test of time as the industry standard for efficiency, quality and product life. Raypak's copper finned tube is one integral piece of copper with the fins extruded from the tube. Hybrid designs using separate copper fins and cupronickel tubes just can't stand the test of time. When you choose Raypak, you can rest assured you are making the right choice.

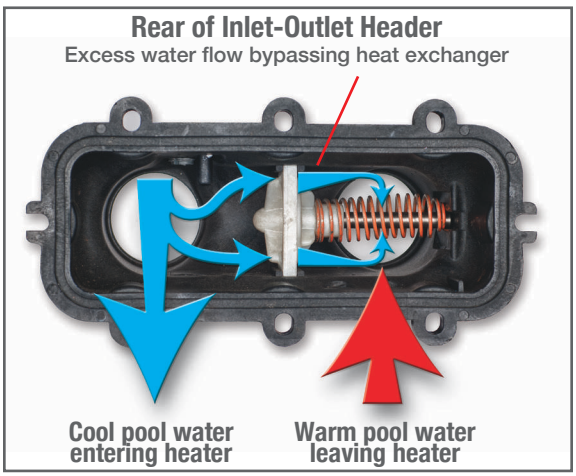

Automatic Bypass

The water flow rate inside the heater is controlled to help eliminate condensation, sooting and scale buildup that can shorten the life of a heater. Raypak engineered a built-in automatic bypass specifically for the 106 and 156 to help prevent condensation, scaling and erosion by balancing the flow going into the heat exchanger. This allows the heaters to operate with a large range of pump sizes without having to make any adjustments to the flow rates.

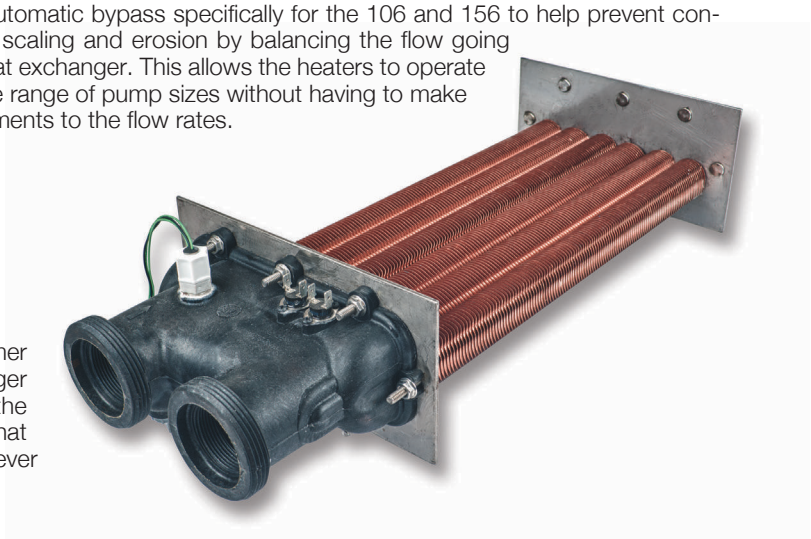

Rust-Free Waterways

The Raypak 106 and 156, utilize the latest technology in rust free polymer header design along with an integral copper finned-tube heat exchanger and stainless steel tube sheets. Even the smallest details such as the studs and nuts are made out of stainless steel. The payoff? A heater that will last year after year and can easily be serviced if the need should ever arise.

Technical Data
Raypak 106 & 156 Pool and Spa Heaters

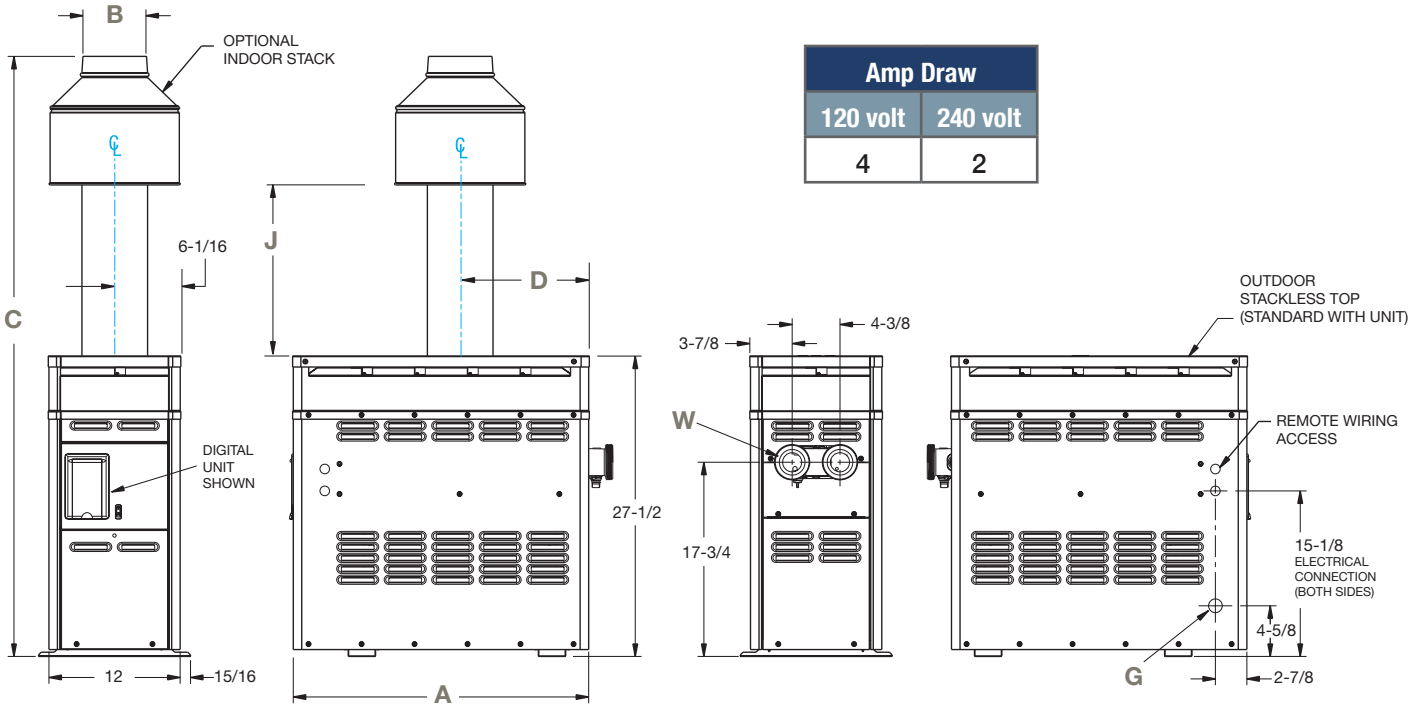

Amp Draw	
120 volt	240 volt
4	2

Heater Model	BTUH Input (000)	(A) Cabinet Depth	(B) Flue Dia.	(C) Indoor Drafthood	(D)	(J) Minimum	(G) Gas Conn.	(W) Water Conn.	Shipping Weights (lbs)	
									Unit with Stackless Top	Indoor Drafthood
R106A	105.0	24”	6”	55-1/2”	9-5/16”	16-1/4”	1/2” NPT	2”	85	15
R156A	150.0	27”	6”	55-1/2”	11-13/16”	16-1/4”	1/2” NPT	2”	100	15

Designation for a digital heater using propane gas is “EP”; a digital heater using natural gas is “EN”.
Designation for an analog heater using propane gas is “AP”; an analog heater using natural gas is “AN”.
Example: P-R156A-EN- = 156 model size, digital, natural gas – Heater can be installed directly on a combustible surface.
Reduce input 4% for each 1000 feet above sea level when installed above 2000 feet elevation.

Extend Your Swim Season in Comfort...

A Raypak gas heater can turn your backyard pool investment into resort-style living almost year round. Get the most out of your pool by keeping it comfortable and open longer. Raypak gas heaters give you the flexibility of warming your pool water in the months before and after your normal swim season. Your backyard evening events are rarely slowed down by cool weather when you have a Raypak gas heater on duty.

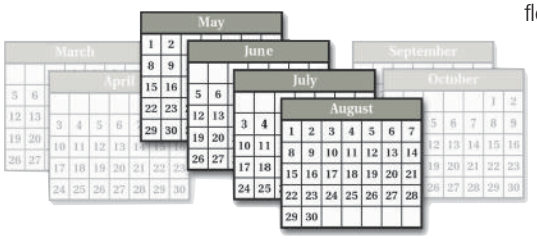

In keeping with its policy of continuous progress and product improvement, Raypak reserves the right to make changes without notice.

www.raypak.com

2151 Eastman Avenue | Oxnard, CA 93030 | 805-278-5300

Litho in U.S.A. ©2013-2014 Raypak, Inc.

6100.30B Effective 02-15-19 Replaces 01-01-14