INSTALLATION AND OPERATION MANUAL

Crosswind Side Discharge Heat Pump Pool Heater

Inverter Models
CROSSWIND-30-I through -65-I

On/Off Models
CROSSWIND-40-O through -65-O (Canada Only)

THIS MANUAL CAN BE VIEWED ELECTRONICALLY USING YOUR SMART DEVICE. SEE PAGE 31 FOR QR CODE.

FOR YOUR SAFETY: Do not store or use gasoline or other flammable vapors and liquids or other combustible materials in the vicinity of this or any other appliance. To do so may result in an explosion or fire.

NOTE: The instructions in this manual are for the use of qualified individuals specially trained and experienced in the installation and maintenance of this type of equipment and related system components. Installation and service personnel are required by some states to be licensed. Persons not qualified shall not attempt to install, service, or maintain this equipment.

This manual should be maintained in legible condition and kept adjacent to the heat pump pool heater or in a safe place for future use.

Raypak® A Rheem® Company

Effective: 04-28-23
Replaces: 10-15-21
P/N 241827 Rev. 4

ATTENTION: Please Take This Opportunity to Quickly Register Your Unit

While your unit is being installed by your professional and licensed installer of choice, please take this opportunity to quickly register your unit. With the necessary information in hand, registering your new heat pump pool heater only takes a few moments and is the best way to ensure efficient warranty support during the warranty time frame.

See **Figure 1** at the bottom of the page to locate and record your model and serial number. Once you have done this, please make sure you also have the following information on hand:

- Name, phone number, and email address of homeowner.
- Physical address of where the unit is installed; please include any 'subdivision' or similar information.
- Any service challenges present at the house/ neighborhood: gated community, locked access at house, guard dog, etc.
- Date of installation of the new unit.
- Name and phone number of the professional and licensed entity that performed the installation for you.

With all of the above information in hand, please contact us and ask to register your brand new heat pump,

(800)-260-2758 M-F 8:30 - 4:30 EST

or do this online at:

http://warranty.raypak.com

You will be given a Warranty Registration Confirmation number which you should notate and keep in an easily remembered accessible location along with your Installation and Operation Manual, a copy of your warranty (provided with your manual) and the above information.

This would also be a good time to review both the manual and the warranty so that you are aware of how to correctly operate your new equipment as well as how to keep from voiding any aspects of your warranty. During the life of your unit, please feel free to use the phone number on the last page below to contact us with any questions you may have about operation, warranty, and/or service.

Thank you very much choosing us to satisfy your pool heating needs.

Warranty Registration Confirmation #:

_____

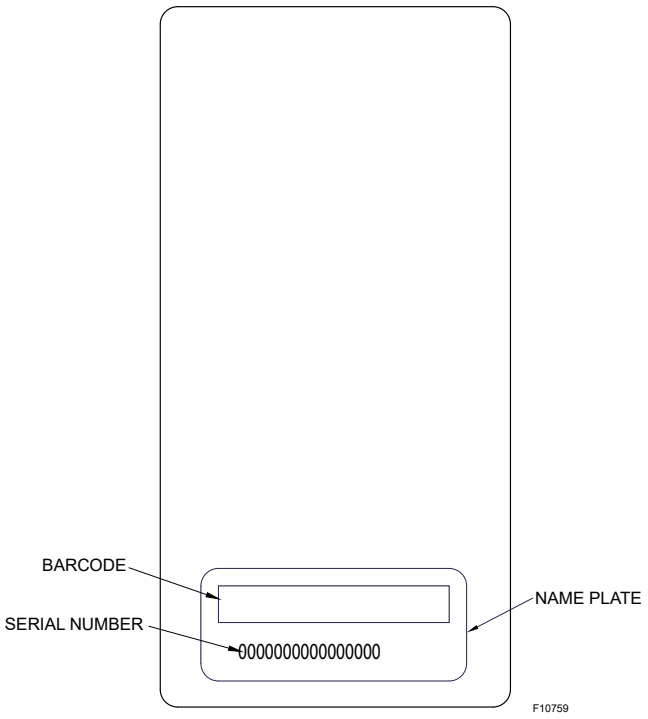

For location of this label on your unit, see **Figure 8**

Figure 1. Model and Serial Number Information

Revision 4 reflects the following changes:

Removed warranty section from document.

TABLE OF CONTENTS

1. WARNINGS 4
Pay Attention to These Terms 4
General Precautions 5

2. WATER CHEMISTRY 5

3. BEFORE INSTALLATION..... 6
Installation Considerations 6
Automatic Chlorinators and Chemical Feeders..... 6
Installation Requirements..... 7
Components for Inverter Models..... 9
Components for On/Off Models 9
Specifications and Dimensions 10
Water Connections..... 11

4. ELECTRICAL WIRING..... 13
Wiring 13
Electrical Connections..... 13
Automation Control, ... 13

5. WIRING DIAGRAMS 14
Crosswind-30-I, 50-I..... 14
Crosswind-40-I 15
Crosswind-65-I 16
Crosswind-40-O 17
Crosswind-50-O 18
Crosswind-65-O 19

6. CONTROLS..... 20
Inverter Models Only 20
On/Off Models Only..... 21
Using the On/Off Display Unit 21

7. OPERATING INSTRUCTIONS..... 22
Start-Up Procedures 22
Before Start-Up 22
Starting..... 22
After Start-Up 22
Maintenance..... 23
Cold Weather Operation 23
Testing..... 23
Time Clock Override Operation..... 23
Crosswind HPPH On/Off Model 24
Basic Lead Multiple HPPH Operation 25

8. TROUBLESHOOTING 26
Fault Codes..... 26

9. TECHNICAL PARAMETERS 27

10. REPLACEMENT PARTS 28

11. ILLUSTRATED PARTS LIST..... 29
Inverter Models 29
On/Off Models 30

12. QR CODE..... 31

1. WARNINGS

Pay Attention to These Terms

⚠DANGER	Indicates the presence of immediate hazards which will cause severe personal injury, death or substantial property damage if ignored.
⚠WARNING	Indicates the presence of hazards or unsafe practices which could cause severe personal injury, death or substantial property damage if ignored.
⚠CAUTION	Indicates the presence of hazards or unsafe practices which could cause minor personal injury or product or property damage if ignored.
CAUTION	CAUTION used without the warning alert symbol indicates a potentially hazardous condition which could cause minor personal injury or product or property damage if ignored.
NOTE	Indicates special instructions on installation, operation, or maintenance which are important but not related to personal injury hazards.

⚠CAUTION: Elevated water temperature can be hazardous. The U.S. Consumer Product Safety Commission has these guidelines:

1. **Spa water temperatures should never exceed 104°F (40°C). A temperature of 100°F (38°C) is considered safe for a healthy adult. Special caution is suggested for young children.**
2. **Drinking of alcoholic beverages before or during spa or hot tub use can cause drowsiness which could lead to unconsciousness and subsequently result in drowning.**
3. **Pregnant Women Beware! Soaking in water over 102°F (39°C) can cause fetal damage during the first three months of pregnancy resulting in the birth of a brain-damaged or deformed child.**
4. **Before entering the spa or hot tub, users should check the water temperature with an accurate thermometer; spa or hot tub thermostats may err in regulating water temperatures by as much as 4°F (2.2°C).**
5. **Persons with a medical history of heart disease, circulatory problems, diabetes, or blood pressure problems should obtain a physician's advice before using pools or hot tubs.**
6. **Persons taking medications which induce drowsiness, such as tranquilizers, antihistamines, or anticoagulants, should not use spas or hot tubs.**

⚠CAUTION: Please do not place hands into the outlet of the swimming pool heater, and do not remove the heater fan screen at any time.

⚠CAUTION: Improper chemical content in a swimming pool or spa can damage the heat pump pool heater. DO NOT add pool/spa chemicals to the pool/spa via the skimmer or any other apparatus (feeder, chlorinator, etc.) That is on the influent side (i.e. inflow side) of the heater. This will damage the heater, and such damage is not covered under warranty. ALWAYS follow the product manufacturer's directions when adding any chemicals to your pool.

⚠CAUTION: These heat pump pool heaters are charged with R-410A refrigerant. Ensure that all service work is done with gauges and equipment suitable for R-410A.

⚠WARNING: This heat pump pool heater is an electromechanical machine that incorporates a pressurized refrigerant gas in a sealed system. ONLY trained and qualified service personnel are authorized to install or service this equipment. Without proper training and knowledge of such equipment, any attempt to install or service the unit could result in serious injury or even death.

General Precautions

Attention

1. Follow the instructions to set a comfortable water temperature and avoid overheating.
2. Please don't stack anything near the heat pump that can block air flow to the inlet or exhaust area, or the efficiency of the heater will be reduced and/or stopped. For unit clearance information, see **Figure 2**.
3. Please do not put hands into the outlet of the heater, and do not remove the screen of the fan at any time.
4. If there are abnormal conditions such as noise, smell, smoke, or electrical leakage, please switch off the heater immediately and contact the local dealer. Don't try to repair it yourself.
5. Do not use or stock combustible gas or liquid such as thinners, paint and fuel close the heater in order to avoid fire.
6. The piping between the pool and the heater should be less than 30 ft (9.1 m) long, or heater performance may suffer.

Safety

1. Please keep the main power supply switch far away from children.
2. If a power outage happens while the heater is running, the heater will restart automatically when power is restored. Please switch off the power supply when there is a power outage, and reset the temperature when power is restored.
3. Please switch off the main power supply in the event of lightning and stormy weather to prevent machine damage from a lightning strike.
4. If the heater is stopped for a long time, please cut off the power supply and drain water completely from the heater by opening the union of the inlet pipe.

Special Attention

Please read this instruction manual carefully and operate strictly according to the user manual before starting the heat pump, otherwise the heat pump may be damaged or cause you unnecessary harm.

This product is only for heating swimming pool or spa water, and cannot be used for other applications.

Inlet and outlet water nozzles are not designed to bear the weight of external pipes. Support the piping independently.

Make sure power is turned off before opening the case and performing service work.

1. The heater must be installed by a qualified electrician.
2. Set heating temperature within the recommended range to maximize comfort.
3. Keep the air inlet and exhaust free from obstructions.
4. This heater has a power-off memory function.
5. When the ambient temperature is at or below 32°F (0°C) make sure the main power switch is turned off and all water is drained from the heat exchanger.
6. Never place your hand or any other object into the air inlet or exhaust of the heater.
7. If you see, hear, smell or otherwise sense anything unusual (such as abnormal noise, smell, smoke, or electrical leakage) switch off the main power switch immediately and contact your local dealer installer.
8. Do not attempt to repair the heater yourself.

2. WATER CHEMISTRY

NOTE: Corrosive water causes damages which will not be covered under warranty.

Chemical imbalance can cause severe damage to your heater and associated equipment. Maintain your water chemistry according to **Table A**. If the mineral content and dissolved solids in the water become too high, scale forms inside the heat exchanger tubes, reducing heater efficiency and damaging the heater. If the pH drops below 7.2, this will cause corrosion of the heat exchanger and severely damage the heater. **Heat exchanger damage resulting from corrosive water will not be covered by the warranty.**

For your health and the protection of your pool equipment, it is essential that your water be chemically balanced. The following levels must be used as a guide for balanced water.

⚠CAUTION: Free chlorine must not exceed 5 ppm which can damage the heater and is not covered under warranty.

- Occasional chemical shock dosing of the pool or spa water should not damage the heater providing the water is balanced.
- Automatic chemical dosing devices and salt chlorinators are usually more efficient in heated water. Unless controlled, they can lead to excessively high chlorine levels which can damage your heater.
- Further advice should be obtained from your pool or spa builder, accredited pool shop, or chemical supplier for the correct levels needed for your pool.

Automatic Chlorinators and Chemical Feeders

All chemicals must be introduced and completely diluted in the pool or spa water before being circulated through the heater. Do not place sanitizing chemicals in the skimmer. High chemical concentrations will result when the pump is not running (e.g. overnight).

Chlorinators must feed downstream of the heater and have an anti-siphoning device to prevent chemical backup into the heater when the pump is shut off.

See plumbing diagrams starting with **Figure 9**.

NOTE: High chemical concentrates from feeders and chlorinators that are out of adjustment will cause rapid corrosion to heat exchanger. Such damage is not covered under the warranty.

Recommended Level(s)	Fiberglass Pools	Fiberglass Spas	Other Pool and Spa Types
Water Temperature	68-88°F (20-31°C)	89-104°F (31-40°C)	68-104°F (20-40°C)
pH	7.3-7.4	7.3-7.4	7.6-7.8
Total Alkalinity (ppm)	120-150	120-150	80-120
Calcium Hardness (ppm)	200-300	150-200	200-400
Salt (ppm)	4500 Maximum	4500 Maximum	4500 Maximum
Free Chlorine (ppm)*	2-3	2-3	2-3
Total Dissolved Solids (ppm)	3000 Maximum**	3000 Maximum**	3000 Maximum**

*Free Chlorine **MUST NOT EXCEED 5 ppm!**
**In saltwater chlorinated pools, the total TDS can be as high as 6000 ppm.

Table A. Pool Water Chemistry

3. BEFORE INSTALLATION

⚠WARNING: This heat pump pool heater is an electromechanical machine that incorporates a pressurized refrigerant gas in a sealed system. ONLY trained and qualified service personnel are authorized to install or service this equipment. Without proper training and knowledge of such equipment, any attempt to install or service the unit could result in serious injury or even death.

This manual contains important information on the use, maintenance and troubleshooting of your new heater. This unit must be properly installed, maintained and operated for optimal performance.

This heater is an extremely efficient, economical machine designed specifically for pool heating. It is similar in design and operation to a typical residential air conditioning system. The unit employs a hermetic motor/compressor operating in a refrigeration cycle to extract heat from ambient air and deliver it to the circulating pool water.

All heat pump pool heaters have a lower BTU/hr heating capacity than a gas-fired or oil-fired heater for the same pool and will have to operate more hours per day to keep the pool at setpoint. It may operate up to 24 hours a day at certain times. It is designed to do so. Even with long runtime hours, it will heat the pool at less cost than other heaters using fossil fuel.

Since evaporation is the main cause of heat loss from a pool, keeping the pool covered whenever it is not in use will greatly reduce the cost of keeping the pool heated. Even during warmer weather, Raypak recommends keeping the pool covered at night.

INSTALLATION

Installation Considerations

Locate the heater carefully to minimize installation costs while providing maximum efficiency of operation, and to allow adequate service access, as follows:

For unrestricted air intake and service access, position each side of the unit according to **Figure 2.**

⚠WARNING: This unit is designed for outdoor installation. It is NOT certified for indoor installation. DO NOT install it in an enclosed area such as a shed or garage, or under a porch or deck.

To minimize water piping, locate the unit as close as possible to the existing pool pump and filter.

Irrigation water should be directed away from the heater as irrigation water spray can damage the heater.

Rain water runoff - the unit is designed to operate outdoors and can be exposed to rain. However, rain water run off falling directly onto the unit can cause damage and/or shorten the life of your unit. Such damage is not covered under warranty. Install rain gutters or rain diverters on your roof if the unit is installed in a position where contact with rain runoff may occur.

⚠WARNING: Do not install the unit within 3 ft (0.9 m) of fossil-fuel-burning heaters. Air intake along the sides of this heater could disturb the combustion process of the unit, and could cause damage or personal injury. Mount the unit on a level, sturdy base, preferably a concrete slab. The size of the base should be at least 3 ft by 3 ft (0.9 m x 0.9 m).

Installation Requirements

The heater must be installed by a pool professional. End users are not qualified to install the heater. Damage may occur to the heater or threaten the safety of the user.

1. The heater must be installed OUTSIDE in a well ventilated area to avoid air recirculation, and in a place with adequate room for both installation and maintenance. Please refer to the following illustration.
2. This unit requires a minimum of 12" (305 mm) of clearance from walls, shrubbery, equipment, etc. around the entire perimeter of the heater. This allows for ample air intake. Ample clearance around the air outlet is required to prevent recirculation of air. We recommend not placing the unit underneath eaves, decks, or porches, as this causes recirculation of discharged air, thereby reducing the efficiency of the heater, or even stopping it.
3. Do not stack anything that will block air flow near the inlet or outlet areas, or have any barrier within 20" (508 mm) behind the main heater, or the efficiency of the heater will be reduced.
4. The heater needs a pool pump (to be supplied by the user). For recommended pump flow rates, see **Table J** for Inverter Models, or **Table K** for On/Off Models.
5. When the heater is running, there will be condensation water discharged at the base. Place the drainage nozzle into the condensation outlet and attach it securely, then contact a drainage pipe from it to the drain.
6. The piping between pool and the heater should be less than 30 ft (9.1 m), or heater performance cannot be ensured.
7. For best results, insulate the pipes between the pool and heater.
8. It is important to keep the area next to the heater clear of shrubs, bushes and chemical containers. These could prevent air from circulating fully through the heater, and will affect the operation of the heater or damage the heater.
9. When installed in areas where freezing temperatures can be encountered, drain the water circuit to prevent possible freeze-up damage. See page 23 for proper procedures.
10. If the heater is below the water line of the pool, an external WFS might be needed.

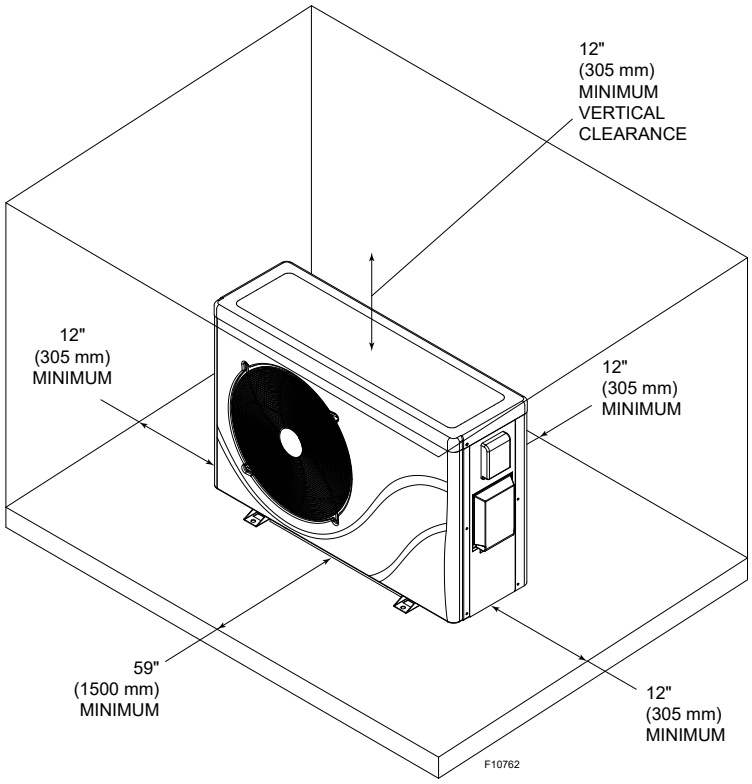

Figure 2. Ventilation Clearances

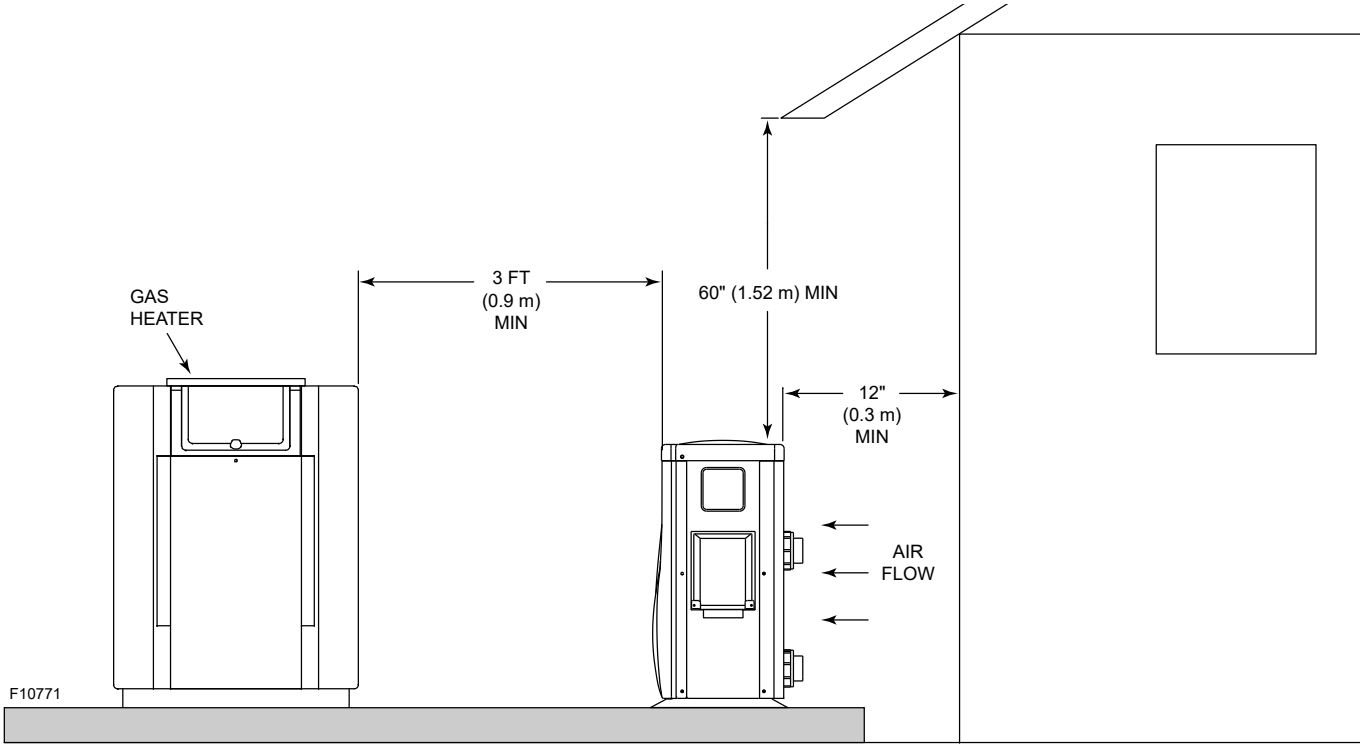

Figure 3. Installation Clearances

Inverter Models 60Hz (Heating and Cooling)				
Models	**Raypak P/N**	**Rheem P/N**	**RUUD P/N**	**Jacuzzi P/N**
CROSSWIND-30-I	17738	17742	17746	17750
CROSSWIND-40-I	17739	17743	17747	17751
CROSSWIND-50-I	17740	17744	17748	17752
CROSSWIND-65-I	17741	17745	17749	17753

On/Off Models 60Hz (Heating and Cooling)				
Models	**Raypak P/N**	**Rheem P/N**	**RUUD P/N**	**Jacuzzi P/N**
CROSSWIND-40-O	18122	18125	18128	18131
CROSSWIND-50-O	18123	18126	18129	18132
CROSSWIND-65-O	18124	18127	18130	18133

Table B. Model Identification

Components for Inverter Models

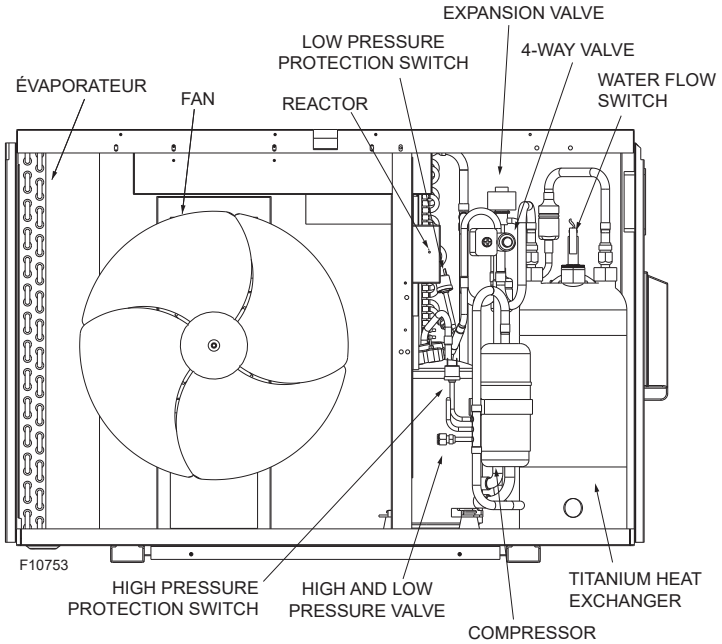

Figure 4. Inverter Model - Component Locations, Front View

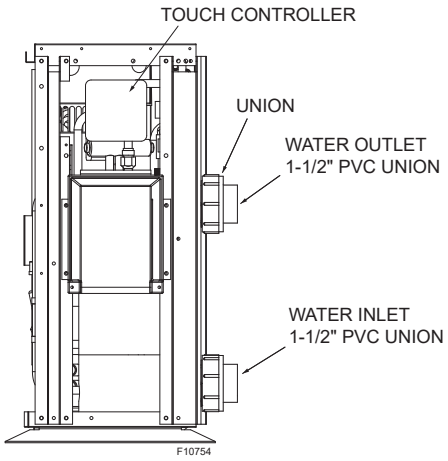

Figure 5. Inverter Model - Component Locations, Right Side View

Components for On/Off Models

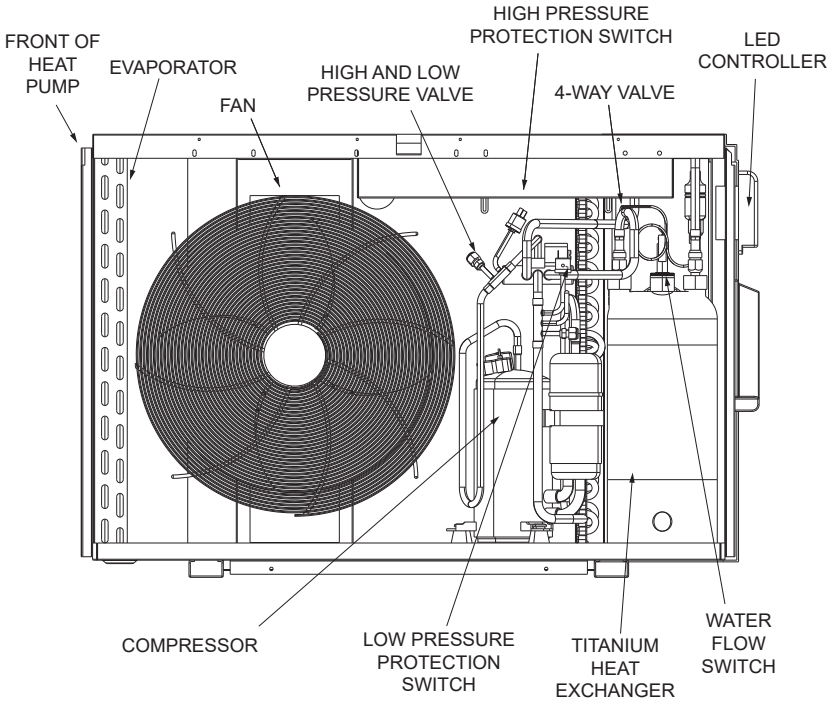

Figure 6. On/Off Model - Component Locations, Front View

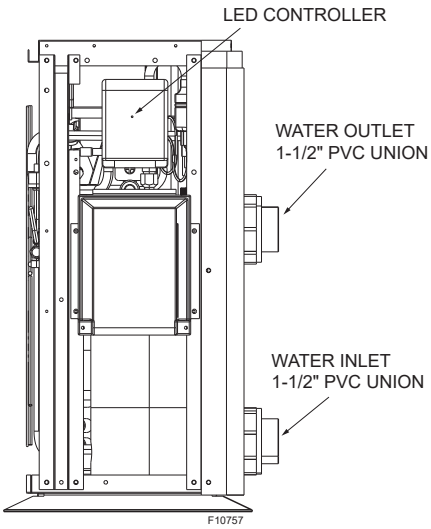

Figure 7. On/Off Model - Component Locations, Right Side View

Specifications and Dimensions

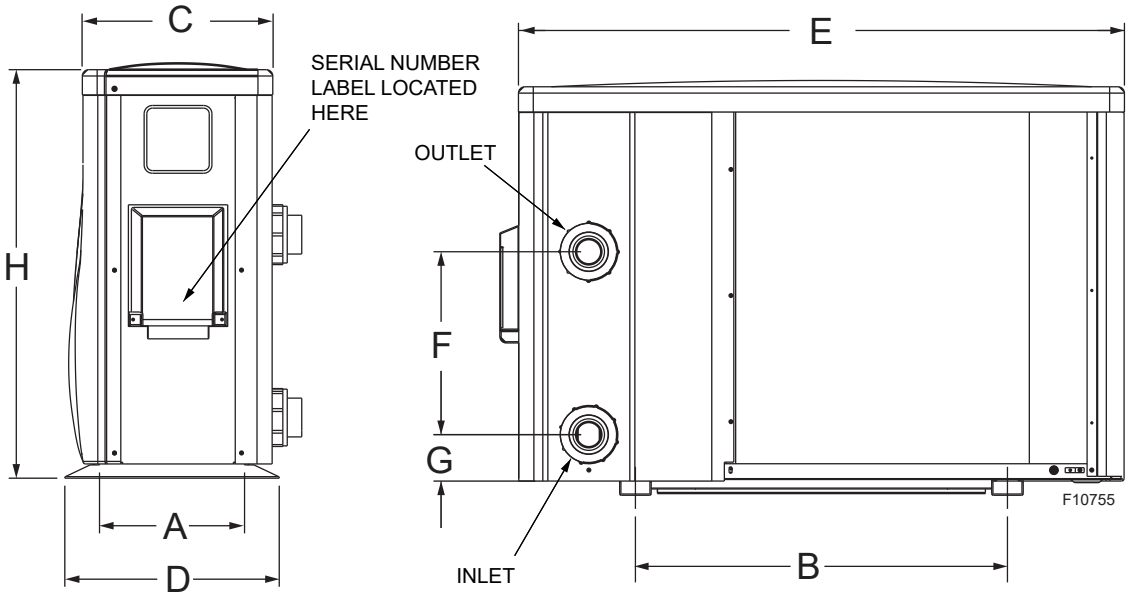

Figure 8. Dimensions

Inverter Models									
Models	**A**	**B**	**C**	**D (Width)**	**E (Length)**	**F**	**G**	**H (Height)**	**Weight lb. (kg)**
CROSSWIND-30-I	12.4 (315)	23.2 (312)	12.3 (312)	13.4 (340)	39 (991)	11.4 (290)	2.9 (74)	25.9 (657)	104 (47)
CROSSWIND-40-I	12.4 (315)	23.2 (312)	12.3 (312)	13.4 (340)	39 (991)	11.4 (290)	2.9 (74)	25.9 (657)	106 (48)
CROSSWIND-50-I	12.4 (315)	23.2 (312)	12.3 (312)	13.4 (340)	39 (991)	13 (330)	2.9 (74)	25.9 (657)	115 (52)
CROSSWIND-65-I	15.6 (395)	23.2 (312)	15.4 (390)	16.5 (420)	39 (991)	14.2 (360)	2.9 (74)	25.9 (657)	137 (62)

On/Off Models									
Models	**A**	**B**	**C**	**D (Width)**	**E (Length)**	**F**	**G**	**H (Height)**	**Weight lb. (kg)**
CROSSWIND-40-O	12.4 (315)	23.2 (590)	12.3 (312)	12.4 (315)	39 (991)	11 (280	3 (77)	25.9 (657)	126 (57)
CROSSWIND-50-O	15.6 (395)	24 (610)	15.4 (390)	15.6 (396)	39 (991)	12.2 (310)	3 (77)	25.9 (657)	150 (68)
CROSSWIND-65-O	15.6 (395)	23.2 (590)	15.2 (387)	15.6 (396)	39 (991)	15 (380)	3 (77)	29.8 (757)	172 (78)

Table C. Basic Product Data - in. (mm)

Water Connections

NOTE: Unions Lock-Rings and O-rings are connected to the Inlet and Outlet of the Heat Exchanger.

⚠CAUTION: The heater inlet and outlet connections are NOT interchangeable. They must be connected as instructed below.

⚠WARNING: Chemical feeders can result in serious damage to, or premature failure of the heater and may void the heater warranty. Install a check valve and/ or a Hartford loop AFTER the heater and BEFORE any chlorinating devices. Install any automatic chemical feeders AFTER the heater.

1. Connect the heater in the return water line between the filter and the pool/spa. See the piping layout shown in **Figure 9**.
2. Connect the filter outlet to the fitting marked at the bottom front of the unit.
3. Connect the fitting marked to the return piping to the pool/spa. The inlet/outlet connection fittings of the unit are 1-1/2 inch PVC unions.

Water connections from the heater to the main return line can be PVC pipe or flexible pipe approved for the purpose and, in either case, should be at least equal in size to the main pool/spa circulation piping.

1. Shutoff diverter valves, preferably three-way valves which allows for a bypass route, on the inlet and outlet lines of the heater are required:
   a. to protect (completely bypass) the heater from any harmful chemical treatments (i.e. acid wash, back-to-back super chlorinators, stain treatments, etc.); or
   b. to isolate the heater for service/repair or freeze preparation and still allow pool/spa circulation to continue.

Install any automatic chemical feeders downstream of the heater. See the piping layout shown in **Figure 9**.

Note that some municipalities do not allow the use of a shutoff valve on the effluent/outlet side of any heating equipment, especially when there is one on the inlet side. These entities typically instead allow a PVC tee and spring check valve on the effluent/outlet side. This is acceptable and can also double as your protection from chemical feeders and chlorinators that are downstream of the unit.

Operate the pump and check the system for leaks.

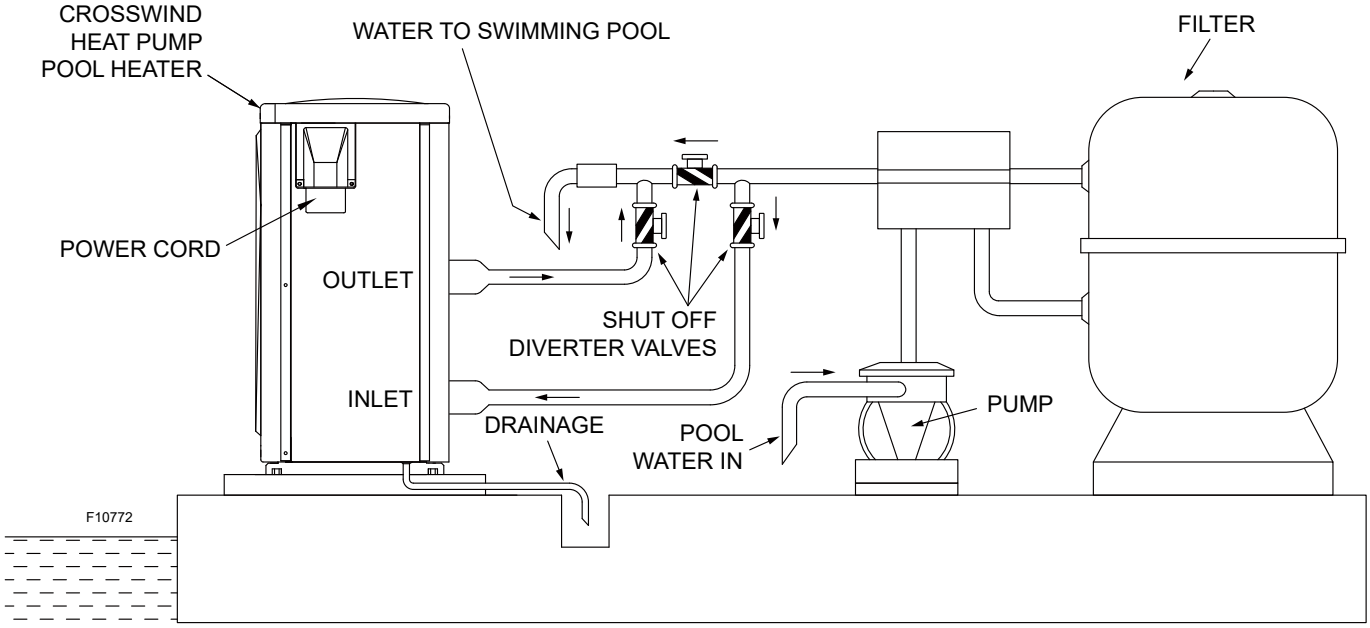

Figure 9. Piping Layout

RAYPAK, INC.

WIND LOAD EVALUATION OF HEAT PUMP CROSSWIND MODELS: AT GRADE MOUNTED APPLICATIONS

APPROVED DESIGN CRITERIA: 50.2 PSF LATERAL 41.2 PSF UPLIFT WIND LOAD

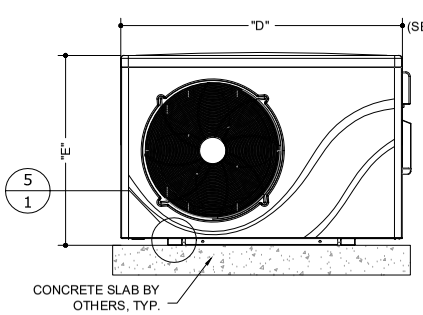

1/1 MECHANICAL UNIT
N.T.S. FRONT VIEW

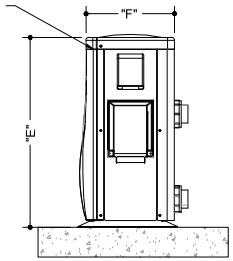

2/1 MECHANICAL UNIT
N.T.S. FRONT VIEW

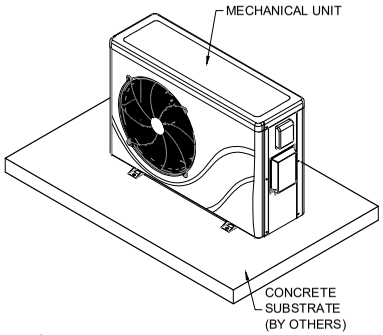

3/1 MECHANICAL UNIT
N.T.S ISO VIEW

ABOUT THIS DOCUMENT
ENGINEER-CERTIFIED ORIGINALS, VARIATIONS & MORE INFORMATION CAN BE FOUND BY VISITING ENGINEERINGEXPRESS.COM/STORE OR BY SCANNING OR USING THE WEB ADDRESS FOUND HERE >

SCAN HERE

OR, GO TO ECALC.IO/TER

THIS DOCUMENT NOT VALID WITHOUT ORIGINAL ENGINEER CERTIFICATION

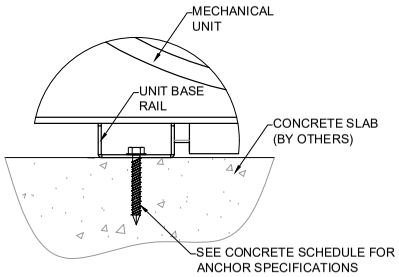

5/1 TIE-DOWN DETAIL
N.T.S. ELEVATION

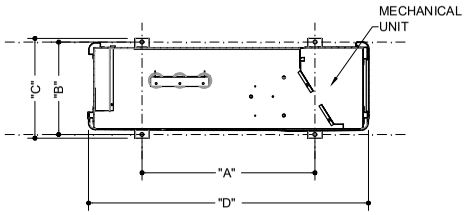

4/1 TIE-DOWN LAYOUT
N.T.S. PLAN

ANCHOR SCHEDULE:

SUBSTRATE	DESCRIPTION
CONCRETE: (4" THICK MIN, 3000 PSI MIN.)	(1)-1/4"Ø ELCO ULTRACON SS4, 1.75" EMBEDDED INTO 3 KSI CONCRETE, 2.5" MIN. EDGE DISTANCE, 3" MIN. SPACING TO ANY ADJACENT ANCHOR OR ANY EQUIVALENT RATED CAPACITY ANCHOR.

See "Table C. Basic Product Data - in. (mm)" on page 10 for dimensions and weights.

DESIGN NOTES:

SITE-SPECIFIC PRESSURE REQUIREMENTS AS DETERMINED IN ACCORDANCE WITH ASCE 7-10 AND CHAPTER 16 OF THE FLORIDA BUILDING CODE SHALL BE LESS THAN OR EQUAL TO THE DESIGN PRESSURE CAPACITY VALUES LISTED HEREIN FOR ANY ASSEMBLY AS SHOWN. DESIGN PRESSURE REQUIREMENTS SHALL BE DETERMINED BY A REGISTERED DESIGN PROFESSIONAL ON A JOB-SPECIFIC BASIS IN ACCORDANCE WITH THE GOVERNING CODE.

GENERAL NOTES:

1. THIS SYSTEM HAS BEEN DESIGNED AND SHALL BE FABRICATED IN ACCORDANCE WITH THE REQUIREMENTS OF THE FLORIDA BUILDING CODE SIXTH EDITION (2017). THIS SYSTEM MAY BE USED WITHIN AND OUTSIDE THE HIGH VELOCITY HURRICANE ZONE. THIS DESIGN IS NOT INTENDED TO CERTIFY IMPACT RESISTANCE OF THE MECHANICAL UNIT CABINETRY.
2. NO 33-1/3% INCREASE IN ALLOWABLE STRESS HAS BEEN USED IN THE DESIGN OF THIS SYSTEM.
3. ALL DIMENSIONS AND THE MINIMUM WEIGHT (100 LB MINIMUM) OF MECHANICAL UNIT SHALL CONFORM TO LIMITATIONS STATED HEREIN. ALL MECHANICAL SPECIFICATIONS (CLEAR SPACE, TONNAGE, ETC.) SHALL BE AS PER MANUFACTURER RECOMMENDATIONS AND ARE THE EXPRESS RESPONSIBILITY OF THE CONTRACTOR.
4. ANCHORS REFERRED TO HEREIN SHALL BE ELCO ULTRACON SS4 OR ANY EQUIVALENT RATED CAPACITY ANCHOR, INSTALLED TO 3000 PSI MIN CONCRETE. SEE ANCHOR SCHEDULE FOR ANCHOR REQUIREMENTS. ALL FASTENERS SHALL HAVE APPROPRIATE CORROSION PROTECTION TO PREVENT ELECTROLYSIS.
5. ALL CONCRETE SPECIFIED HEREIN IS NOT PART OF THIS CERTIFICATION. AS A MINIMUM, ALL CONCRETE SHALL BE STRUCTURAL CONCRETE 4" MIN. THICK AND SHALL HAVE MINIMUM COMPRESSIVE STRENGTH OF 3000 PSI, UNLESS NOTED OTHERWISE.
6. THE CONTRACTOR IS RESPONSIBLE TO INSULATE ALL MEMBERS FROM DISSIMILAR MATERIALS TO PREVENT ELECTROLYSIS.
7. ELECTRICAL GROUND, WHEN REQUIRED, TO BE DESIGNED & INSTALLED BY OTHERS.
8. THE ADEQUACY OF ANY EXISTING STRUCTURE TO WITHSTAND SUPERIMPOSED LOADS SHALL BE VERIFIED BY THE ONSITE DESIGN PROFESSIONAL AND IS NOT INCLUDED IN THIS CERTIFICATION.EXCEPT AS EXPRESSLY PROVIDED HEREIN, NO ADDITIONAL CERTIFICATIONS OR AFFIRMATIONS ARE INTENDED.
9. THE SYSTEM DETAILED HEREIN IS GENERIC AND DOES NOT PROVIDE INFORMATION FOR A SPECIFIC SITE. FOR SITE CONDITIONS DIFFERENT FROM THE CONDITIONS DETAILED HEREIN, A LICENSED ENGINEER OR REGISTERED ARCHITECT SHALL PREPARE SITE SPECIFIC DOCUMENTS FOR USE IN CONJUNCTION WITH THIS DOCUMENT.

Figure 10. Hurricane Tie Down Instructions

4. ELECTRICAL WIRING

Wiring

Electrical installation should be done by a licensed electrician only.

1. Make sure the power supply is at the rated voltage of the appliance.
2. Ground the heater.
3. Wiring must be installed by a professional installation technician and follow the circuit diagram.

Electrical Connections

Electrical installation should be done by a licensed electrician only.

Refer to the unit rating plate below the control panel for precise power requirements for your unit, and for ampacity and over-current protection requirements.

All wiring must be in accordance with the National Electrical Code, NFPA No. 70, latest edition, and all applicable state and local codes. The wiring diagrams are located on **page** 14 through **page** 18.

⚠WARNING: This heater MUST be installed using flexible conduit for supply wiring to the unit. This will allow movement of the conduit whenever the junction box is removed for service.

Locate the equipment disconnect means within 3 ft. (0.9 m) of the heater's electrical enclosure, or as close to the heater as possible. Always satisfy applicable codes and standards.

In sizing power wiring, be especially aware of up-sizing requirements necessary due to wiring distances. Always satisfy applicable codes and standards.

NOTE: Refer to the National Electrical Code, Article 680, for general requirements for swimming pools and equipment, and to Article 440 for special considerations necessary for circuits supplying hermetic refrigeration motor/compressors.

This heater is pre-wired to work with external control systems, heat-on-demand options, and other external time clock overrides. Refer to the external control system's instructions.

NOTE: Please refer to page 23 for instructions on the Time Clock Override. page 24 & page 25 refer to instructions on operating multiple Heat Pumps with a Lead Heat Pump to control follower Heat Pumps.

Models	Power	Min. Circuit Ampacity	Breaker Size (Amp)	
			min.	max.
CROSSWIND-30-I	208-230VAC 60HZ/1PH	12A	15A	15A
CROSSWIND-40-I		12A	15A	15A
CROSSWIND-50-I		16A	20A	20A
CROSSWIND-65-I		20A	20A	25A
CROSSWIND-40-O		12A	15A	15A
CROSSWIND-50-O		16A	20A	20A
CROSSWIND-65-O		17.2A	25A	25A

* Reference only - see National Electrical Code or local codes for wire gauge length limits.

Table D. Electrical Power Requirements

Automation Control

2-Wire System - Heat Only (Inverter models only)

The Crosswind inverter models have a temperature sensor for temperature automation control.

Heater 2-Wire Controllers (Heat Only)

1. Install wires from the automation controller for "Heat" on the terminal strip inside the heater electrical compartment on the side of the heater.
2. Remove the jumper wire on the terminal block from terminals marked #5 and #6. See **Figure 11,** and wiring diagrams on **page 14** through **page 19**.

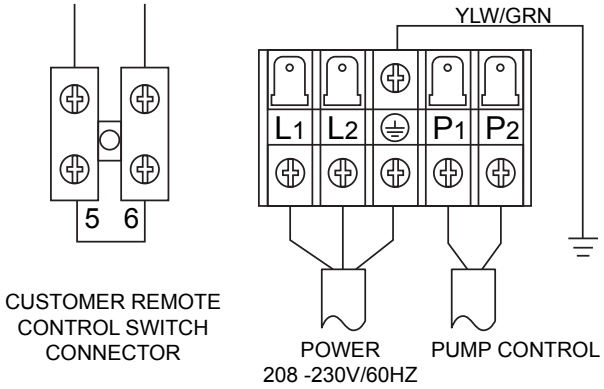

Figure 11. Automation Control 2-Wire System Connection

3. Install the automation control wires for "Heat" to terminals #5 and #6.
4. Set temperature setting on the heater to 104°F (40°C).

NOTE: When the automation controller has a HEAT command the unit will be in the HEAT mode. When the automation controller does not have a HEAT command the unit will be in the OFF mode.

5. WIRING DIAGRAMS

Crosswind-30-I, 50-I

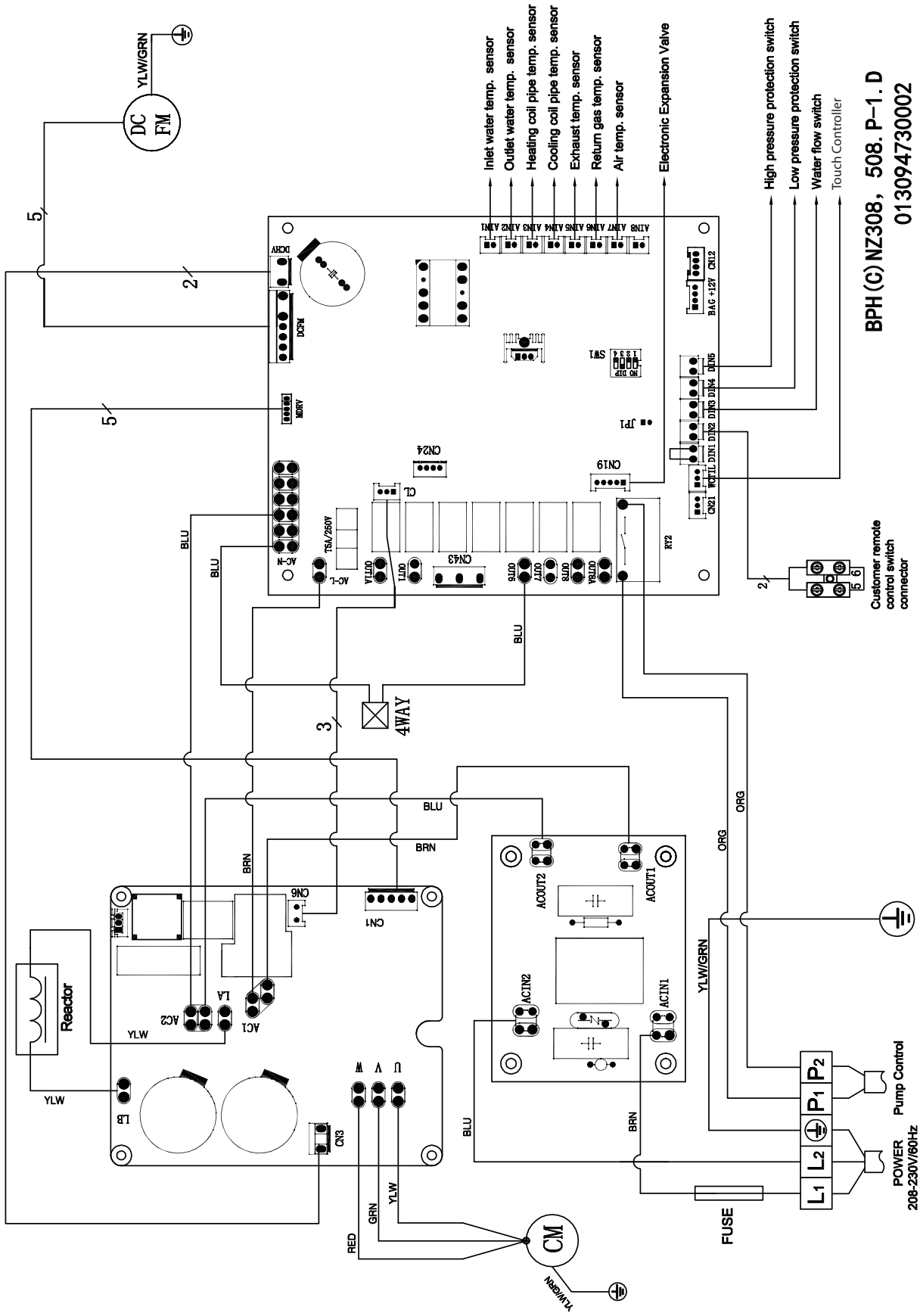

Crosswind-40-I

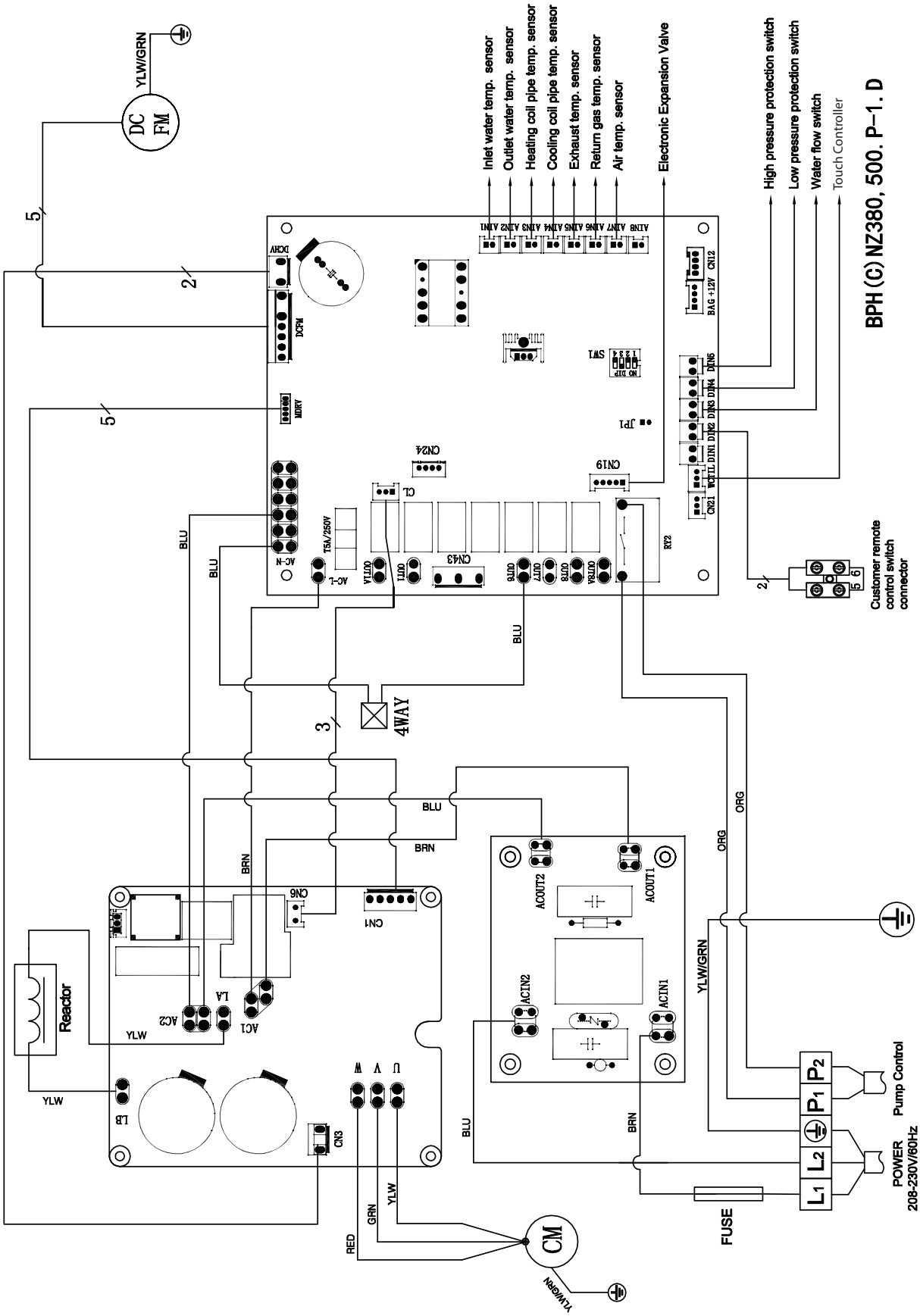

Crosswind-65-I

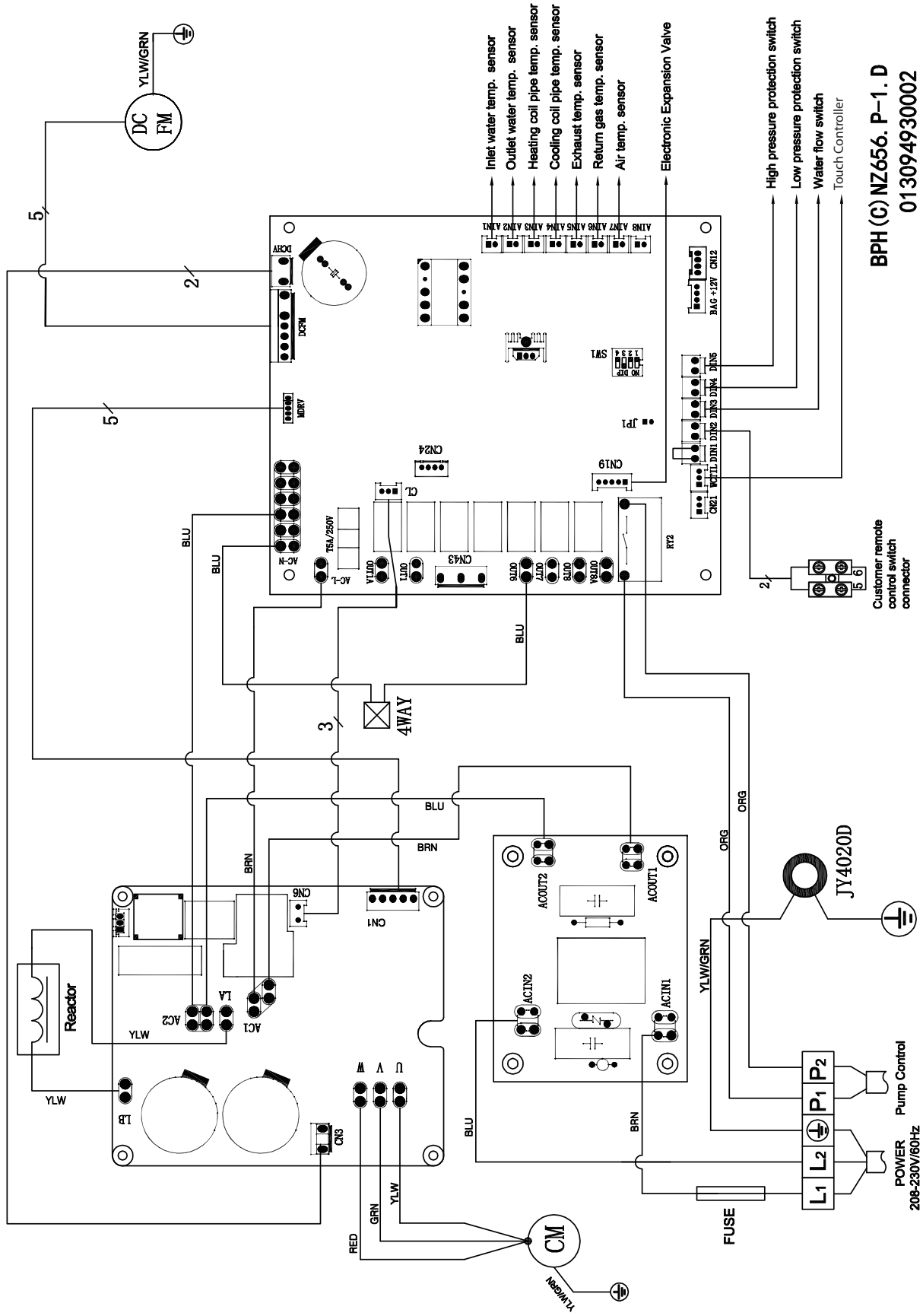

Crosswind-40-O

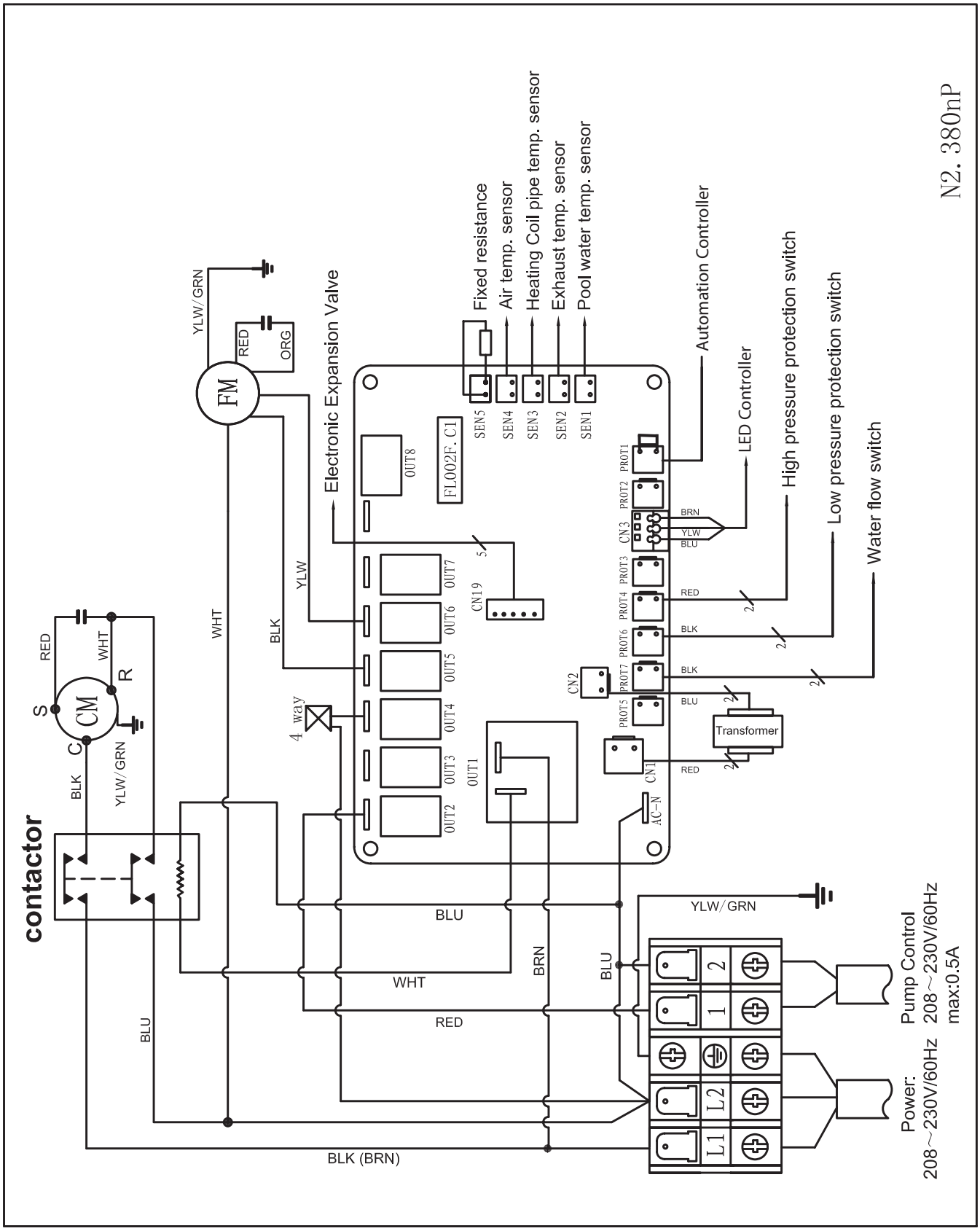

Crosswind-50-O

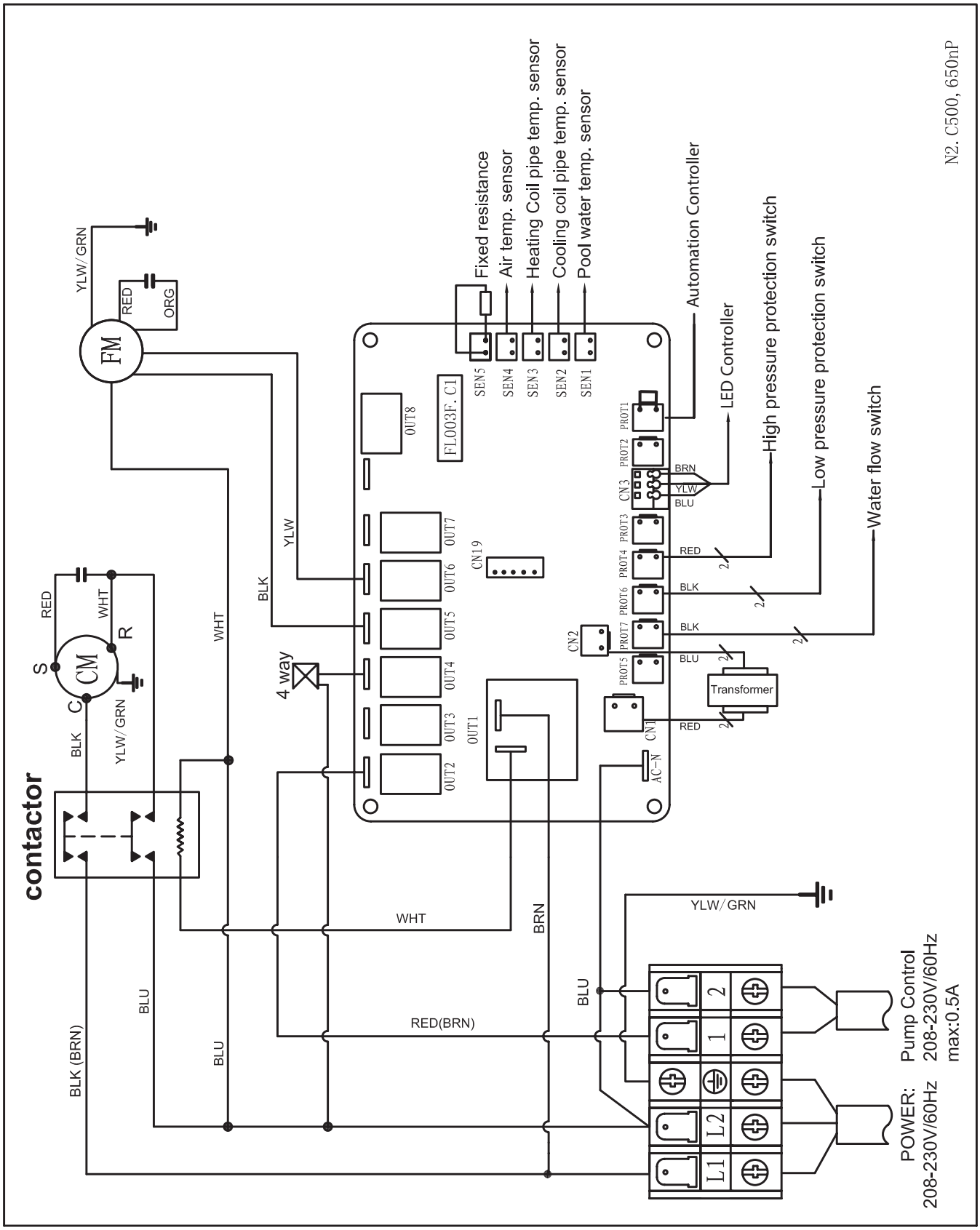

Crosswind-65-O

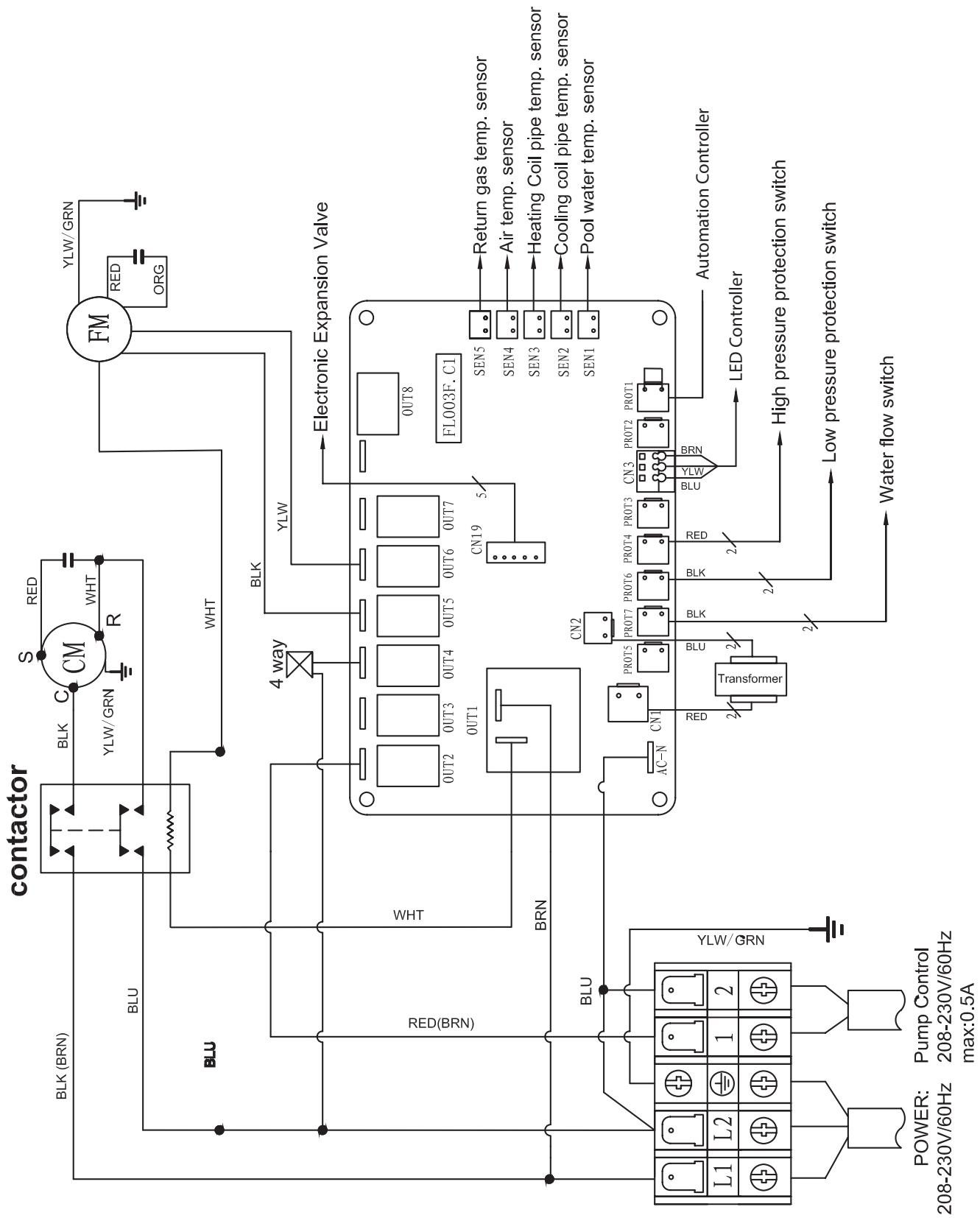

6. CONTROLS

Inverter Models Only

The Display controls general operation. The layout, main functions and buttons are shown below.

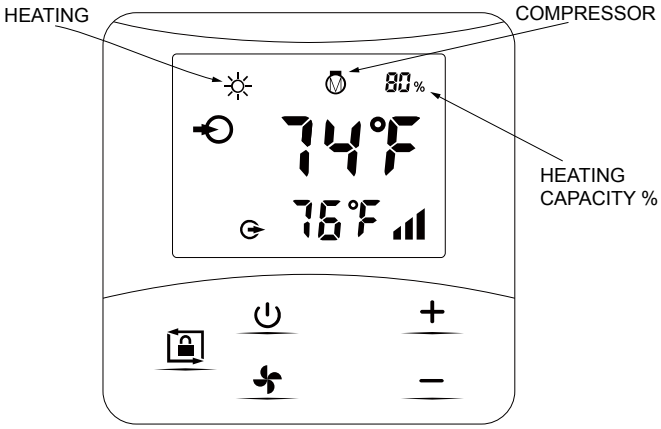

Figure 12. Operation Display, Models -30-I through -65-I

Symbol	Designation	Button Functions
		Press 3 seconds to unlock/lock screen
	ON/OFF	Power On/Off
	Speed	Smart/Silent Mode
+	Up	Temperature Adjustment
—	Down	Temperature Adjustment

Table E. Display Button Functions

Power On

Press the LOCK button for 3 seconds to light up screen, then press POWER to power on the heater.

Adjust/Set Temperature:

When screen is unlocked, press UP + or DOWN — to display or adjust the set temperature.

To change from Fahrenheit to Celsius, press the + and the — for 3 seconds.

Smart/Silent mode selection

Smart mode, as default, will be activated when the HEAT PUMP is on, and the screen shows .

Press FAN to enter Silent Mode. The display screen will show .

NOTE: Select Smart Mode for initial heating.

Screen Lock

If no button is used within 30 seconds, the screen will lock automatically. At this point the backlight will turn off and 0% will display.

Alternatively you can lock the display by pressing the LOCK button for 3 seconds to achieve the same result.

To unlock the screen and use any other button, follow the Power On instruction above.

Defrosting

Auto Defrosting:

1. When the heater is defrosting, HEATING will continually flash.
2. After defrosting, HEATING will stop flashing.

Manual Defrosting:

1. When heater is heating, press FAN and MINUS — together for 5 seconds to start manual defrosting, will flash continuously.

After defrosting, HEATING will stop flashing.

NOTE: Manual defrosting intervals should be more than 30 minutes and the compressor should run for more than 10 minutes.

Heat, Cool or Auto Mode

1. Press the Lock button for 3 seconds to light the screen.
2. Press the Lock button to change the Heat Pump operating MODE.

MODES:

- POOL HEAT (sun icon) Heat to set point
- POOL COOL (snow icon) Cool to set point
- POOL AUTO (triangle icon) Heat or Cool to set point.

On/Off Models Only

The display controls general operation. The layout, main functions and buttons are shown below.

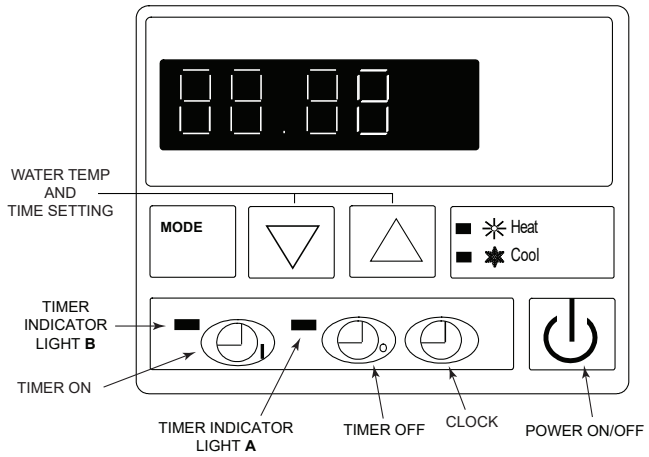

Figure 13. Operation Display, Models -40-O through -65-O

Symbol	Designation	Button Functions
	Power	Power Switch
	Clock	Set local time
	Timer Off	Set the time required machine auto-stop
	Light A	Shows the auto-stop time being set
	Timer On	Set the time required machine auto-work
	Light B	Shows the auto-work time being set
	Cool	Shows the cool mode (for heat and cool models only)
	Heat	Shows the heat mode
MODE	MODE Key	Heat or cool mode selection (only available in heat and cool machine)
	Down-ARROW	Set required temperature and time
	Up-ARROW	Set required temperature and time
88.88	LED screen	Display time, temperature and machine failure code

Table F. Display Button Functions

Using the On/Off Display Unit

Display defaults

- The LED screen will display the time when the machine is off.
- The LED screen will display the current water temperature in the pool when the machine is on.

To change from Fahrenheit to Celsius, press and HOLD the Timer ON button for 10 seconds to change from °F to °C.

Heat/Cool Mode

1. Press the MODE button to switch from one mode to another.

NOTE: Available only in heat and cool models.

Setting pool water temperature

Temperature can be adjusted either when the machine is on or off.

1. Press UP ⊿ or DOWN ▽ to set your target pool water temperature.
2. The numbers on the LED screen will flash during adjustment.
3. After five seconds of inactivity, the LED will stop flashing, the adjusted target temperature will be saved, and the LED screen will revert to the default display.
4. Later on, at any time, if you want to check the temperature setting, press UP ⊿ or DOWN ▽ again to access its setting.

Setting the clock

1. The clock can be set either when the machine is on or off.
2. Press CLOCK ◷ to set the time to your local time zone. The displayed time on the LED screen will now flash.
3. To set the hour press CLOCK ◷ again, then press UP ⊿ or DOWN ▽.
4. To set the minute press CLOCK ◷ before it stops flashing and then press UP ⊿ or DOWN ▽.
5. After setting, press CLOCK ◷ and the water temperature will appears. After 30 seconds, it will stop flashing and the LED screen will return to its default.

Automatic on/off settings

The display can be programmed to turn the machine on and off automatically.

Setting the ON time

1. Press CLOCK ◷ to access the timer function.
2. When the indicator light is on and the time is flashing, press CLOCK ◷ again to set the hour. Use UP ⊿ or DOWN ▽ to adjust.
3. While the display is still flashing, press ◷ to set minute. Use UP ⊿ or DOWN ▽ to adjust.
4. After adjustment, press TIMER ON ◷ to confirm the setting, and the water temperature will be displayed. After 30 seconds, the controller display will be revert to its default mode.

Setting the OFF time

1. Press CLOCK to access the timer function.
2. When the indicator light is on and the time is flashing, press CLOCK again to set the hour. Use UP or DOWN to adjust.
3. While the display is still flashing, press to set minute. Use UP or DOWN to adjust.
4. After adjustment, press TIMER OFF to confirm the setting, and the water temperature will be displayed.

After 30 seconds, the display will revert to its default mode.

Canceling automatic mode

1. Press TIMER ON or TIMER OFF to cancel automatic on/off operation.
2. While the LED is still flashing, press CLOCK. Note that when the timer indicator light goes off, and LED shows water temperature, the timer automatic on/off function is canceled.

After 30 seconds, the display will revert to its default mode.

Defrosting

NOTE: Manual defrosting intervals should be more than 30 minutes and the compressor should run for more than 10 minutes.

Automation Control - ON/OFF model

This feature is operational only in Heat Mode.(2-wire system).

The ON/OFF model have a temperature sensor for temperature automation control.

Please refer **page** 24 for operational instructions.

7. OPERATING INSTRUCTIONS

Start-Up Procedures

If your heater has been installed correctly, operating the heater is an easy task. The display allows you to turn the heater ON or OFF and adjust the temperature settings for the pool or spa. The temperature range is factory-set from 64°F (18°C) to 104°F (40°C) - HEAT ONLY. 54°F (12°C) to 86°F (30°C) - COOL ONLY.

Details on **Inverter Models f**or starting, and adjusting the settings, see **page** 20. For **On/Off Models** see **page** 21.

Before Start-Up

Model Identification

The model number of the heater can be found on the rating plate, **Figure 1**.

Water

Water must be flowing through the heater during operation. Ensure that the system is filled with water and that the pump is operating.

⚠WARNING: Operation of the heater without water circulation will cause rapid and severe damage to the heater, and will void the warranty.

Starting

NOTE: The user must start the pool pump before the heater, and turn off the heater before the pool pump, or the heater will be damaged.

The user should start the pool pump, and check for any leakage of water; Power on and press the ON/OFF button on the heater, and set a suitable temperature at the thermostat.

In order to protect the heater, the heater is equipped with a time-delay starting function. When starting the heater, the blower will run for 1 minute before the compressor.

After the heater starts up, check for any abnormal noise from the heater.

After Start-Up

Feel the inlet and outlet pipes. The outlet pipe should be only slightly warmer than the inlet. It should not be hot.

Details on **Inverter Models** for adjusting the settings, see **page** 20. For **On/Off Models** see **page** 21.

Model Identification

The model number of the heater can be found on the name plate, **Figure 1**.

Maintenance

⚠CAUTION: Turn off heater power supply before service work including cleaning, examination, or repair. Do not touch any electronic components until the LED indication lights on the PCB is off.

When a power outage happens while the heater is running, the heater will restart automatically when the power is restored. Please switch off the power supply when there is a power outage, and reset the temperature setting when power is restored.

If the heater is stopped for a long time, please cut off the power supply and drain water completely from the heater by opening the union of the inlet pipe.

Check bolts, cables, and connections regularly for looseness and adjust as needed.

Cold Weather Operation

In the 'off' season, when the pool is not going to be used at all:

1. Cut off the power supply to avoid damage to the heater.
2. Drain water from the heater by removing the piping connection on both the inlet and outlet side, from the pool to the heater. As needed, use a shop dry/wet vac or air pressure to purge any excess water.
3. Unscrew the water union of the inlet pipe (top) to let water flow out completely from the outlet (bottom).

⚠CAUTION: If water is left in the system during freezing weather, the titanium heat exchanger may be damaged.

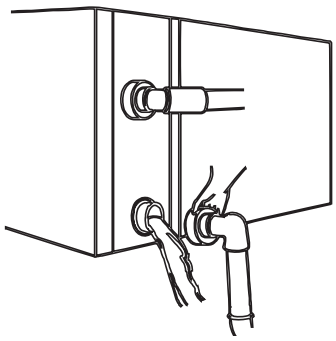

Figure 14. Inlet and Outlet Connections

4. Cover the heater when not in use to protect it from the weather.
5. Clean the heater exterior with standard household detergent or clean water. Never use gasoline, paint thinner or other flammable liquids.

Testing

Inspection before use:

1. Check installation of the entire heater and pipe connections according to the pipe connecting drawing.
2. Check the electric wiring according to the electric wiring diagram; and grounding connection.
3. Make sure that the main heater power switch is off.
4. Check the temperature setting.
5. Check the air inlet and outlet.

Time Clock Override Operation/ Time Clock Extender Operation (Inverter Models Only)

<u>Advanced application</u> (a professional technician shall perform this operation only) - Turns pool pump ON, sets time to check for a heat demand operation.

1. Press the **LOCK** pad and **HOLD** (3-seconds) to light up the screen.
2. Press **FAN** & the **+** pad together for 5-seconds.
3. The CODE "**PO**" with the value of "0" will be visible on the display. (**NOTE**: these steps must be done in 3-seconds or a restart in the programing is required).
4. Press the **FAN** pad to enter the modification code- press the **+** pad to change the code to "2".

Modification code 2 – Time/water temperature control through terminals **P1 & P2** (the value of the code will be flashing) (Time setting **ONLY** available when the **PO** is set to a value of "2". Adjust the range: 10 - 120-min.

5. Press the **FAN** pad to confirm and quit the modification code.
6. Press the **+** pad to the next modification code "**P1**".
7. Press the **FAN** pad – then press the **+** or **-** to change the time range – **DEFAULT** is set to 60-min. (**NOTE:** the value of the code will be flashing).
8. 60-minutes is the recommended setting, or you can change to a higher value (ex. 61 - 120 minutes).
9. Press the **FAN** pad to confirm and quit the modification code.
10. Press the **POWER** pad to exit the modification code.

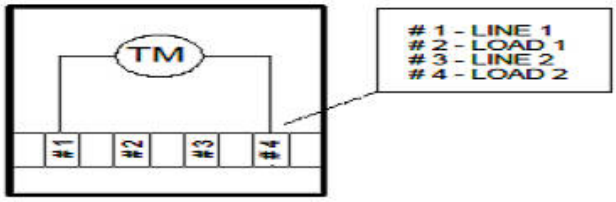

Figure 15. Simple Time Clock

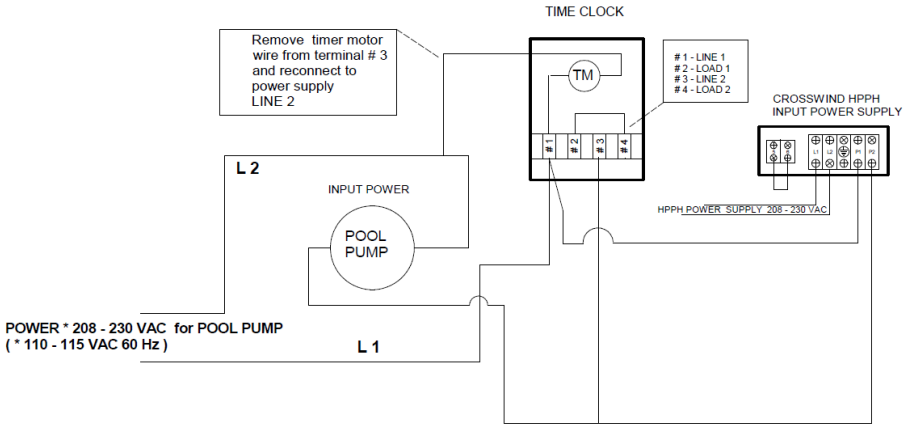

Figure 16. Time Clock Override/Extender Operation (Inverter Models Only)

Crosswind HPPH ON/OFF Model

To install an automation controller that has its own temperature sensor for **HEAT** demand to control the Crosswind **HPPH ON/ OFF** model.

1. Turn off the electrical power to Heat pump Pool Heater and pool pump.
2. Remove the Phillips screws that are on the top cover of the HPPH.
3. To gain access to the electrical components, remove the four (4) Philips screws on the electrical cover. See **Figure 17.**
4. Locate the connection for the **AUTOMATION CONTROLLER** terminals. See **Figure 18.**
5. To install the automation controller cable, cut and splice the YELLOW jumper wire on Terminal **PROT1** to the automation controller cable. See **Figure 19.**
6. Insert 36” + (1 meter) of cable through the chase to the PC Control Board. See **Figure 20.**
7. Program the setpoint to 104°F (40°C) – Press the **UP PAD** to set the target temperature to 104°F (40°C) or to another desired **MAX** temperature.

NOTE: When the automation controller has a **HEAT** demand, the HPPH will be in the **HEAT** mode.

When the automation controller does not have a **HEAT** demand, the HPPH will be in the **OFF** mode.

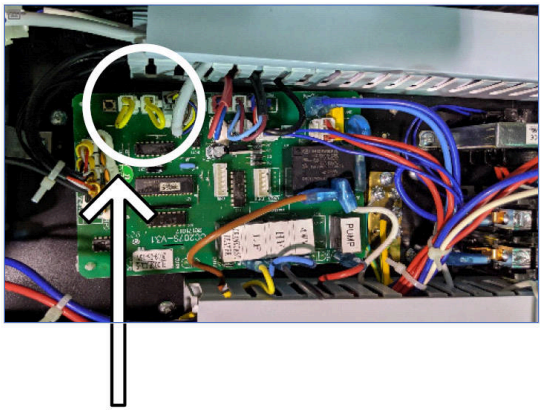

Figure 18. Automation Controller Cable Connection

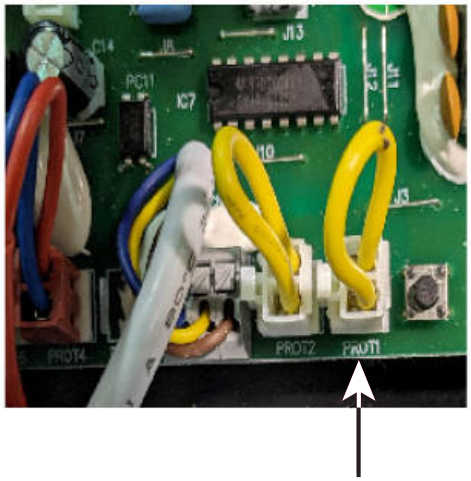

Figure 19. Install Automation Controller Cable

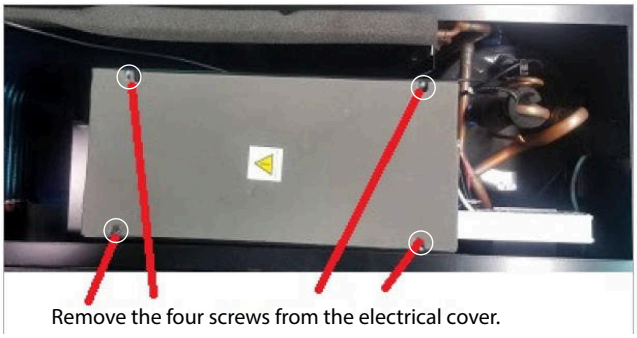

Figure 17. Screw Removal for Electrical Cover

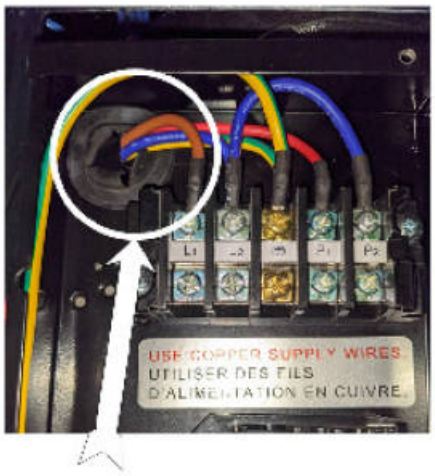

Figure 20. Insert Cable to PC Board (On/Off Models Only)

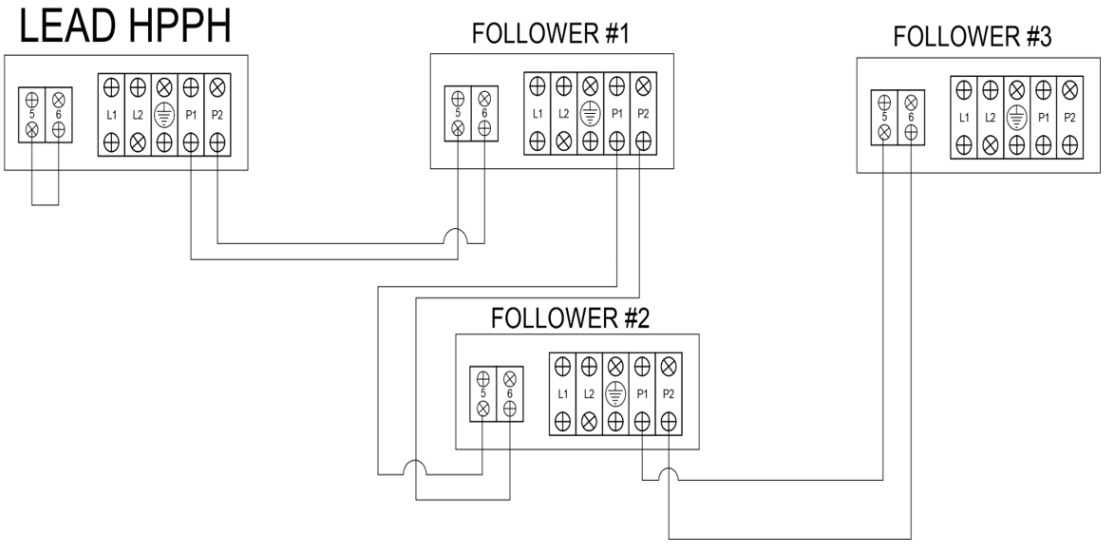

Figure 21. Lead HPPH Wiring (Inverter Model Only)

Basic Lead Multiple HPPH Operation

FOR THE OPERATION OF RUNNING MULTIPLE HPPH with a **LEAD HPPH** to control the follower **HPPH**.

The program on the **LEAD HPPH & Followers** needs to be change for the operation of the single **HPPH** to control the followers **HPPH**.

1. Press and **HOLD** (3-seconds) the **LOCK** pad to light up the screen.
2. Press **FAN** and the **+** pad together for 5-seconds.
3. The **CODE "PO"** with the value of "0" will be evident on the LCD display. (**NOTE**: these steps must be performed in 3-seconds, or a restart in the programing is required).
4. Press the **FAN** pad to enter the modification code - press the **+** pad to change the code to "1". (The value of the code will be flashing. The modification code 1 – water temperature control through terminals P1 & P2). See **Figure 21**.
5. Press the **FAN** pad to confirm and quit the modification code.
6. Press the **POWER** pad to exit.
7. The **FOLLOWERS HPPH** needs to have the water setpoint adjusted to 104°F (40°C):
   a. Press and **HOLD** (3-seconds) the **LOCK** pad to light up the screen.
   b. With the screen "unlocked" press the **+** pad to raise the setpoint to 104°F (40°C).

8. TROUBLESHOOTING

If these solutions, below, do not work, contact your dealer. Do not attempt to repair the heater yourself.

Failure	Reason	Solution
Swimming Pool Heat Pump Does Not Run	Main power off	Wait for the power to be restored
	Power switch is off	Turn on switch
	Fuse burnt	Replace fuse
	Circuit breaker tripped	Turn circuit breaker back on
Heat Pump Runs but Does Not Heat	Air inlet blocked	Remove obstructions
	Air outlet blocked	Remove obstructions
	3-minute protection	Please wait more than 3 minutes for warming to start
	Temp set too low	Set temperature setting

Table G. Common Faults

Fault Codes

Failure Code	Failure Description
E1	High pressure protection
E2	Low pressure protection
E3	Low water pressure protection
E4	Single phase unit: loose wire terminal at PROT2 on the PC board Three phase unit: 3 phase sequence protection
P1	Pool water temp sensor failure
P2	Exhaust temp sensor failure (cooling coil temp for heat and cooling models only)
P3	Heating coil pipe temp sensor failure
P4	Gas return temp sensor failure
P5	Air temp sensor failure
E6	Compressor exhaust overload protection 212°F (100°C) (Heating models only)
P7	When air temp <32°F (0°C), the unit is in auto-stop protection mode, or anti-freeze mode (not a failure)
HEAT flashing	Defrosting (not a failure)

Table H. Fault Codes - On/Off Models Only

No.	Display	Non-Failure Description
1	E3	No water protection
2	E5	Power supply excesses operation range
3	E6	Excessive temp difference between inlet and outlet water (insufficient water flow protection)
4	Eb	Ambient temperature too high or too low protection
5	Ed	Anti-freezing reminder
No.	**Display**	**Failure Description**
1	E1	High pressure protection
2	E2	Low pressure protection
3	E4	3 phase sequence protection (three phase only)
4	E7	Water outlet temp too high or too low protection
5	E8	High exhaust temp protection
6	EA	Evaporator overheat protection (only at cooling mode)
7	P0	Controller communication failure
8	P1	Water inlet temp sensor failure
9	P2	Water outlet temp sensor failure
10	P3	Gas exhaust temp sensor failure
11	P4	Evaporator coil pipe temp sensor failure
12	P5	Gas return temp sensor failure
13	P6	Cooling coil pipe temp sensor failure
14	P7	Ambient temp sensor failure
15	P8	Cooling plate sensor failure
16	P9	Current sensor failure
17	PA	Restart memory failure
18	F1	Compressor drive module failure
19	F2	PFC module failure
20	F3	Compressor start failure
21	F4	Compressor running failure
22	F5	Inverter board over current protection
23	F6	Inverter board overheat protection
24	F7	Current protection
25	F8	Cooling plate overheat protection
26	F9	Fan motor failure
27	Fb	Power filter plate no-power protection
28	FA	PFC module over current protection

Table I. Fault Codes - Inverter Models Only

9. TECHNICAL PARAMETERS

NOTE: Technical parameters as published in AHRI directory.

Inverter Models Only

Parameter	Crosswind Inverter Models			
	30-I	40-I	50-I	65-I
Performance Condition: Air 80°F (27°C), Water 80°F (27°C), Humidity 80%				
Heating capacity (BTUH)	27,850	33,500	44,750	61,000
Heating capacity (BTUH) in silent mode	24,000	29,600	35,000	42,000
COP	5.8	5.6	6.1	5.74
Performance Condition: Air 80°F (27°C), Water 80°F (27°C), Humidity 63%				
Heating capacity (BTUH)	26,850	31,700	42,500	57,650
Heating capacity (BTUH) in silent mode	23,500	28,600	33,300	40,000
COP	5.55	5.50	5.8	5.3
Performance Condition: Air 50°F (10°C), Water 80°F (27°C), Humidity 63%				
Heating capacity (BTUH)	16,590	17,750	21,000	24,500
Heating capacity (BTUH) in silent mode	15,500	17,750	21,000	24,500
COP	4.0	4.0	4.16	4.10
Rated input power (kW)	1.15	1.26	1.28	1.55
Rated input current (A)	5.00	5.5	5.6	6.8
Power supply	208-230VAC/ 1 Ph/60Hz			
Refrigerant (R410A) in oz.	28.2	31.7	38.8	45.9
Water flow GPM (L/min)	13.2~17.7 (50~67)	17.7~26.4 (67~100)	21.9~30.6 (83~116)	28.5~37.5 (108~142)
Sound pressure 39" (3 m) dBA	33.4~45.2	33.6~45.5	34.9~45.0	38.2~49.3
Heat exchanger	Titanium in PVC			
Casing	ABS casing			
Air discharge	Horizontal			
Water pipe in-out Spec	1-1/2" PVC (50 mm)			
Net Dimension	**See Table C on page 10.**			
Net Weight				

* The values indicated are valid under ideal conditions: Pool is well covered, filtration system running at least 15 hours a day.

Table J. Technical Parameters - Inverter Models Only

On/Off Models Only

Parameter	Crosswind On/Off Models		
	40-O	50-O	65-O
Performance Condition: Air 80°F (27°C)/ Water 80°F (27°C)/ Humidity 80%			
Heating capacity (BTU)	35,900	46,500	55,100
C.O.P	5.21	5.40	5.71
Performance Condition: Air 80°F (27°C)/ Water 80°F (27°C)/ Humidity 63%			
Heating capacity (BTU)	34,100	44,100	51,800
C.O.P	5.03	5.07	5.29
Performance Condition: Air 50°F (10°C)/ Water 80°F (27°C)/ Humidity 63%			
Heating capacity (BTU)	20,500	26,000	33,800
C.O.P	3.31	3.17	3.45
Rated input power (kW) at air 80°F (27°C)	1.65	2.3	2.6
Rated input current (A) at air 80°F (27°C)	7.7	10.8	11.8
Power supply	208-230V/1Ph/60Hz		
Minimum circuit ampacity (A)	12	16	17.2
Water flow GPM (L/min)	17.7~26.4 (67~100)	21.9~30.6 (83~116)	28.5~37.5 (108~142)
Sound pressure 3m dB(A)	41.50	41.70	42.40
Heat exchanger	Titanium in PVC		
Casing	ABS casing		
Air discharge	Horizontal		
Water pipe in-out Spec	1-1/2" PVC (50 mm)		
Net Dimension	**See Table C on page 10.**		
Net Weight			

Related parameters are subject to adjustment periodically for technical improvement without further notice. For details please refer to nameplate.

Table K. Technical Parameters - On/Off Models Only

10. REPLACEMENT PARTS

NOTE: To supply you with the correct part, it is important that you supply the heater model number, serial number and type of gas when applicable.

Any part returned for replacement under standard company warranties must be properly tagged with a return parts tag, completely filled in with the heater serial number, model number, etc., and shipped to the Company freight prepaid. If determined defective by the Company and within warranty, a like part or equal substitution will be returned, freight collect. Credit will not be issued.

MANUFACTURER:

Raypak, Inc.
2151 Eastman Avenue
Oxnard, CA 93030

1-800-260-2758

11. ILLUSTRATED PARTS LIST

Inverter Models

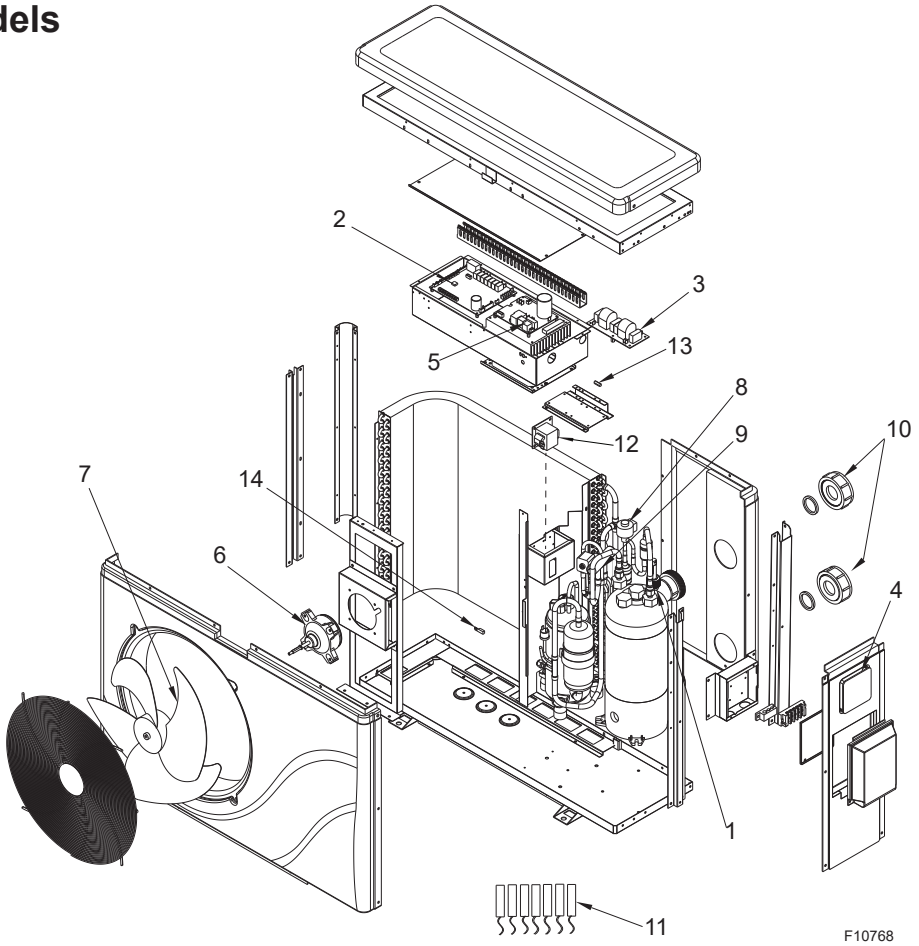

Item	Description	Crosswind-30-1	Crosswind-40-1	Crosswind-50-1	Crosswind-65-1	Instructions P/N
1	Water flow switch	018146F	018146F	018146F	018146F	241808
2	PC board	018147F	018204F	018179F	018180F	241809
3	Power filter plate	018148F	018148F	018148F	018148F	241810
4	Touch controller	018149F	018149F	018149F	018149F	241811
5	Inverter board	018351F	018351F	018352F	018150F	241812
6	Fan motor	018151F	018151F	018151F	018151F	241813
7	Fan blade	018152F	018152F	018152F	018152F	241814
8	Electronic expansion valve coil	018153F	018153F	018153F	018153F	241815
9	4-way valve coil	018154F	018154F	018154F	018161F	241816
10	Water unions and O-rings	018155F	018155F	018155F	018155F	241817
11	Full Set of Sensors	018157F	018157F	018157F	018157F	241819
12	Precision Inductor	018158F	018158F	018158F	018162F	241820
13	Fuse	018159F	018159F	018163F	018164F	241821
14	Drain kit	018160F	018160F	018160F	018160F	241822

On/Off Models

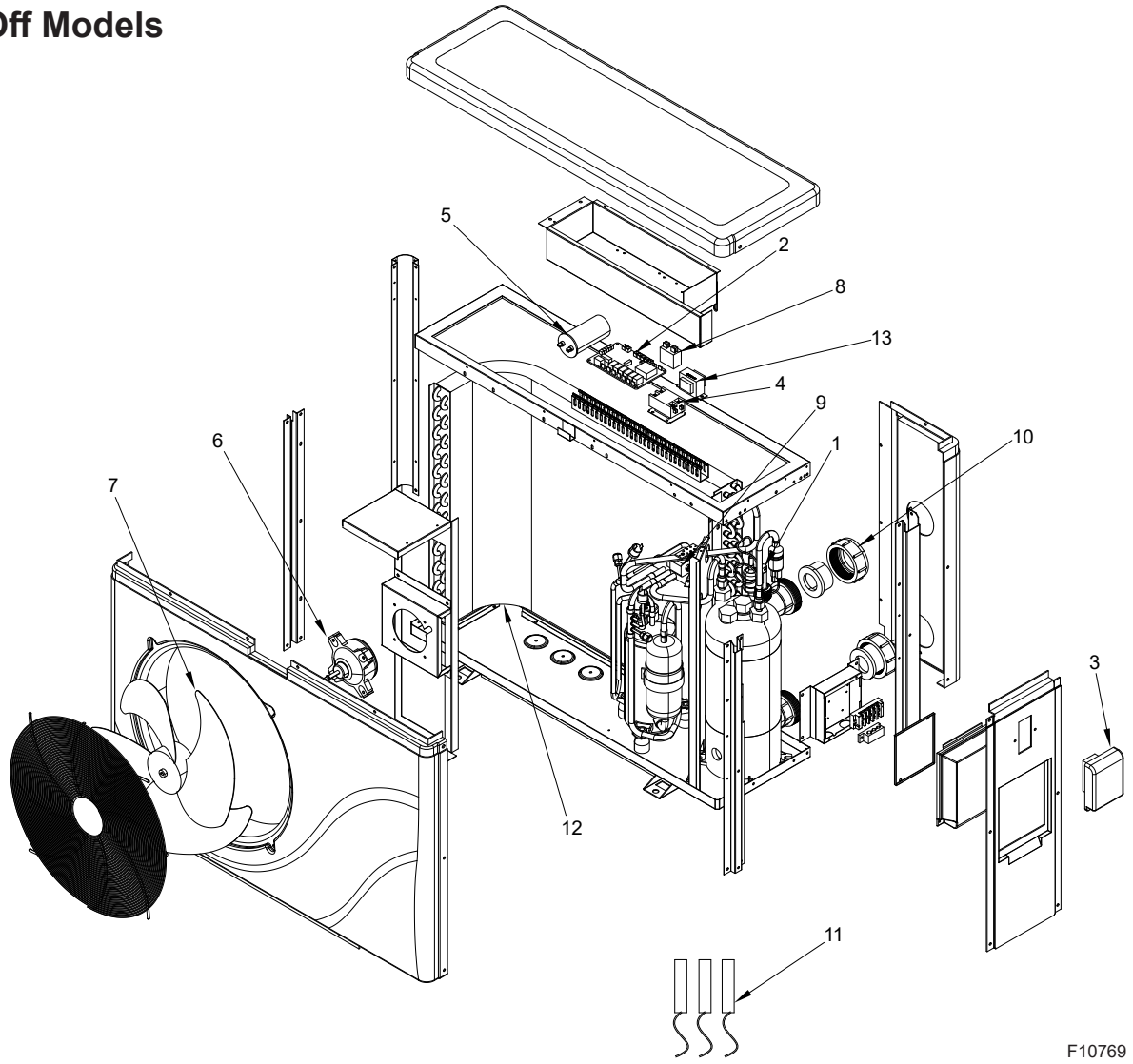

Item	Description	Crosswind-40-0	Crosswind-50-0	Crosswind-65-0	Instructions P/N
1	Water flow switch	018146F	018146F	018146F	241808
2	PC Board	018165F	018165F	018165F	241809
3	LED Controller	018166F	018166F	018166F	241823
4	Contactor	018167F	018167F	018167F	241824
5	Compressor capacitor	018168F	018350F	018350F	241825
6	Fan motor	018169F	018169F	018177F	241813
7	Fan blade	018152F	018152F	018170F	241814
8	Fan motor capacitor	018171F	018171F	018172F	241826
9	4-way valve	018173F	018174F	018174F	241816
10	Water Unions and O-rings	018155F	018155F	018155F	241817
11	Full set of Sensors	018176F	018176F	018176F	241819
12	Drain Kit	018160F	018160F	018160F	241822
13	Transformer	018178F	018178F	018178F	241828

12. QR CODE

View this Installation Manual on your smart device.

The QR Code below will take you to the most current version of this installation manual.

Previous versions of installation manuals can be found in the document library at Raypak.com.

P/N: 241827 MANUAL I&O CROSSWIND