Rheem R801V Gas Furnace Replacement Parts List

Parts list RP-RHM-R801V | Updated Nov 2026 | 409 parts | 32 model numbers

Genuine Rheem OEM part numbers for the models listed below, compiled from Rheem Manufacturing's service parts catalog. Quantities are per unit. Where Rheem has replaced a part number, the current number is shown under Replaced By. Always confirm the full model and serial number of the unit before ordering.

Models covered

R801V0503A14DZNCAP, R801V0503A14DZSCAP, R801V0503A14UHNCAP, R801V0503A14UHSCAP, R801V0504A17UHNCAP, R801V0504A17UHSCAP, R801V0504A17UHUCAP, R801V0704A17UHUCAP, R801V0754A17DZNCAP, R801V0754A17DZSCAP, R801V0754A17UHNCAP, R801V0754A17UHSCAP, R801V0755A21DZNCAP, R801V0755A21DZSCAP, R801V0755A21UHNCAP, R801V0755A21UHSCAP, R801V1004A17UHNCAP, R801V1004A17UHSCAP, R801V1005A21DZNCAP, R801V1005A21DZSCAP, R801V1005A21UHNCAP, R801V1005A21UHSCAP, R801V1005A21UHUCAP, R801V1255A24DZNCAP, R801V1255A24DZSCAP, R801V1255A24UHNCAP, R801V1255A24UHSCAP, R801V1505A24UHNCAP, R801V1505A24UHSCAP, R801VA050417MUA, R801VA070417MUA, R801VA100521MUA

R801V parts breakdown: ULN Furnace Assembly

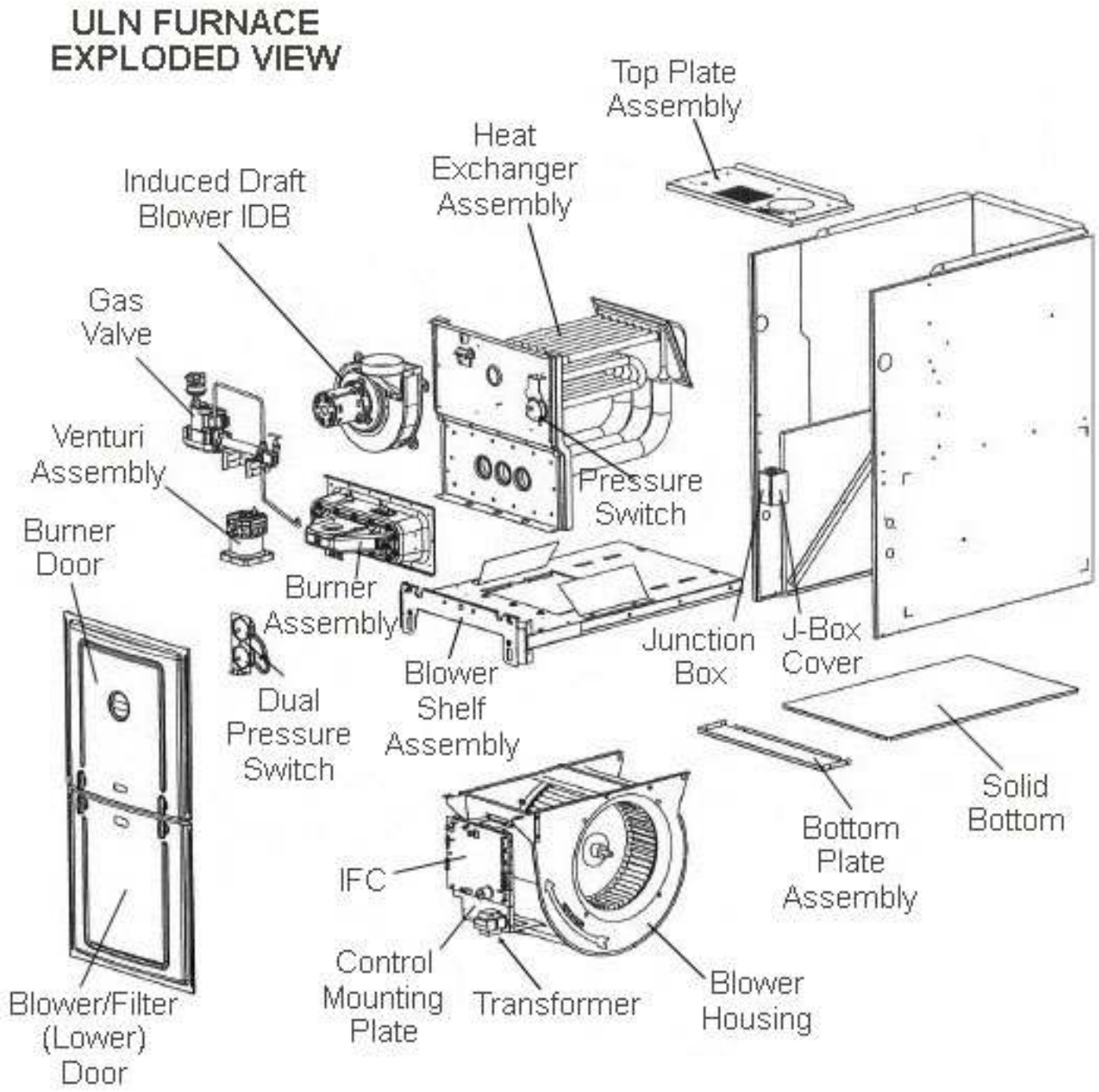

R801V parts breakdown: Exploded View

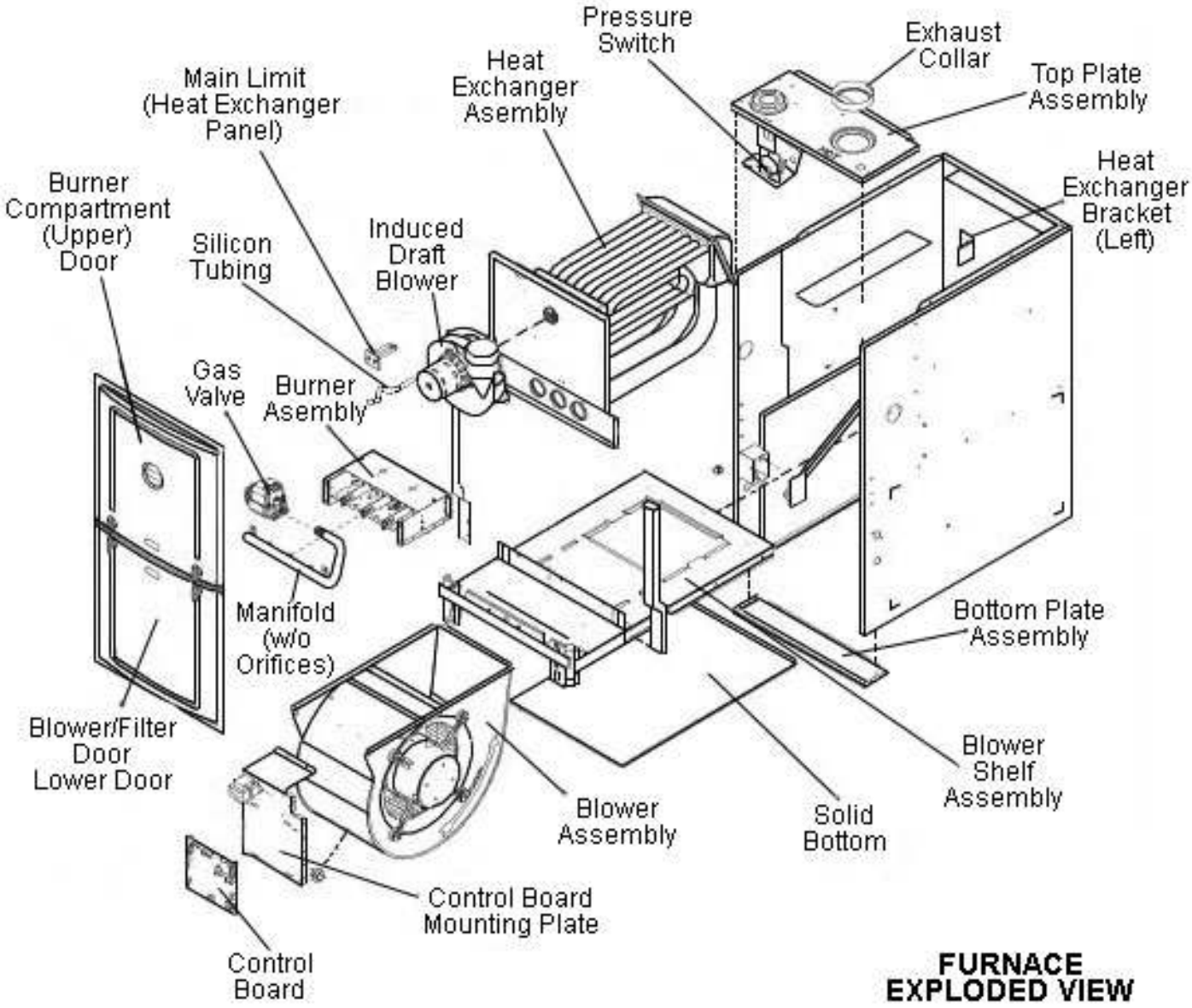

R801V parts breakdown: Exploded View

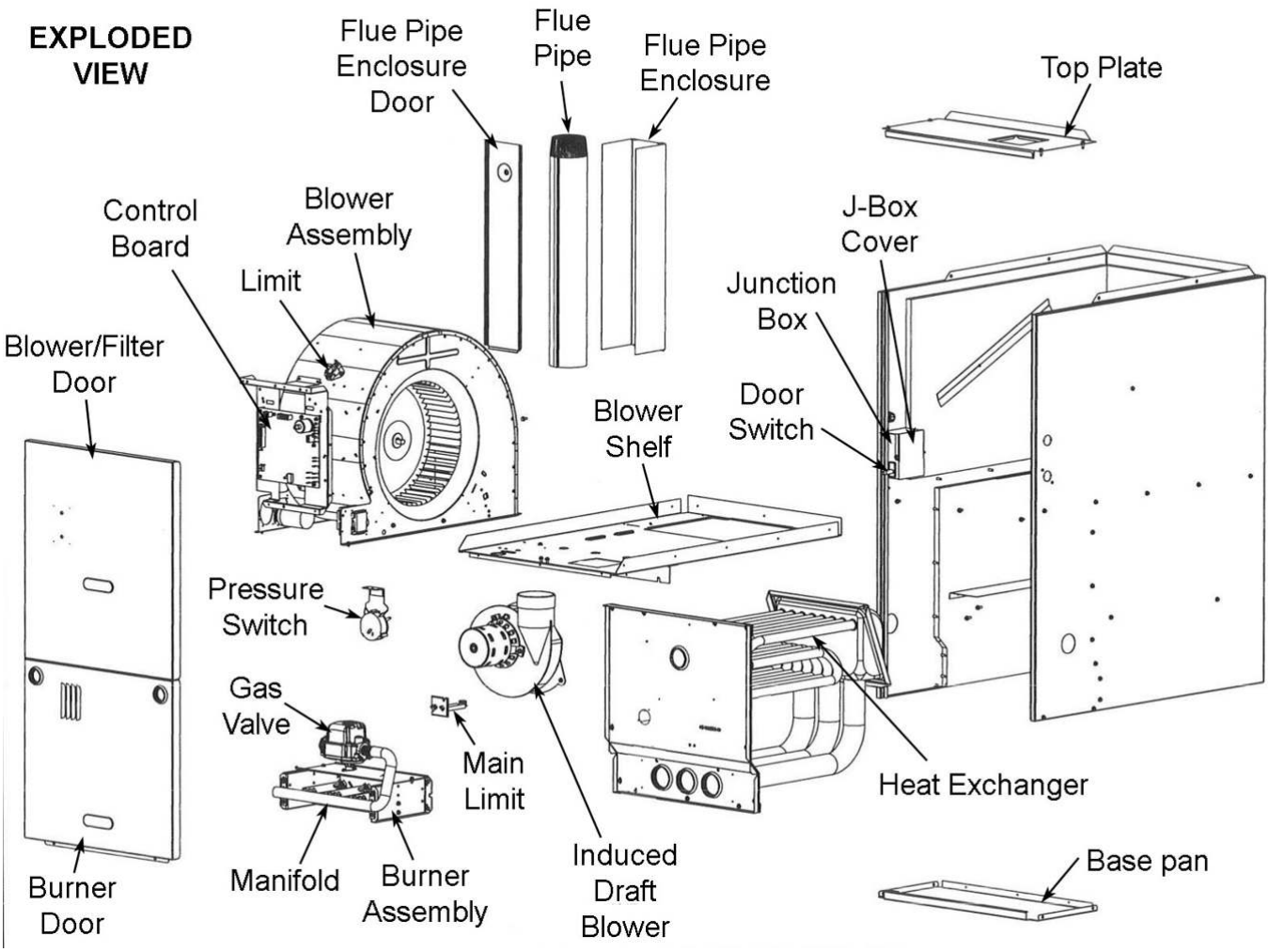

R801V parts breakdown: Inner Cabinet View1

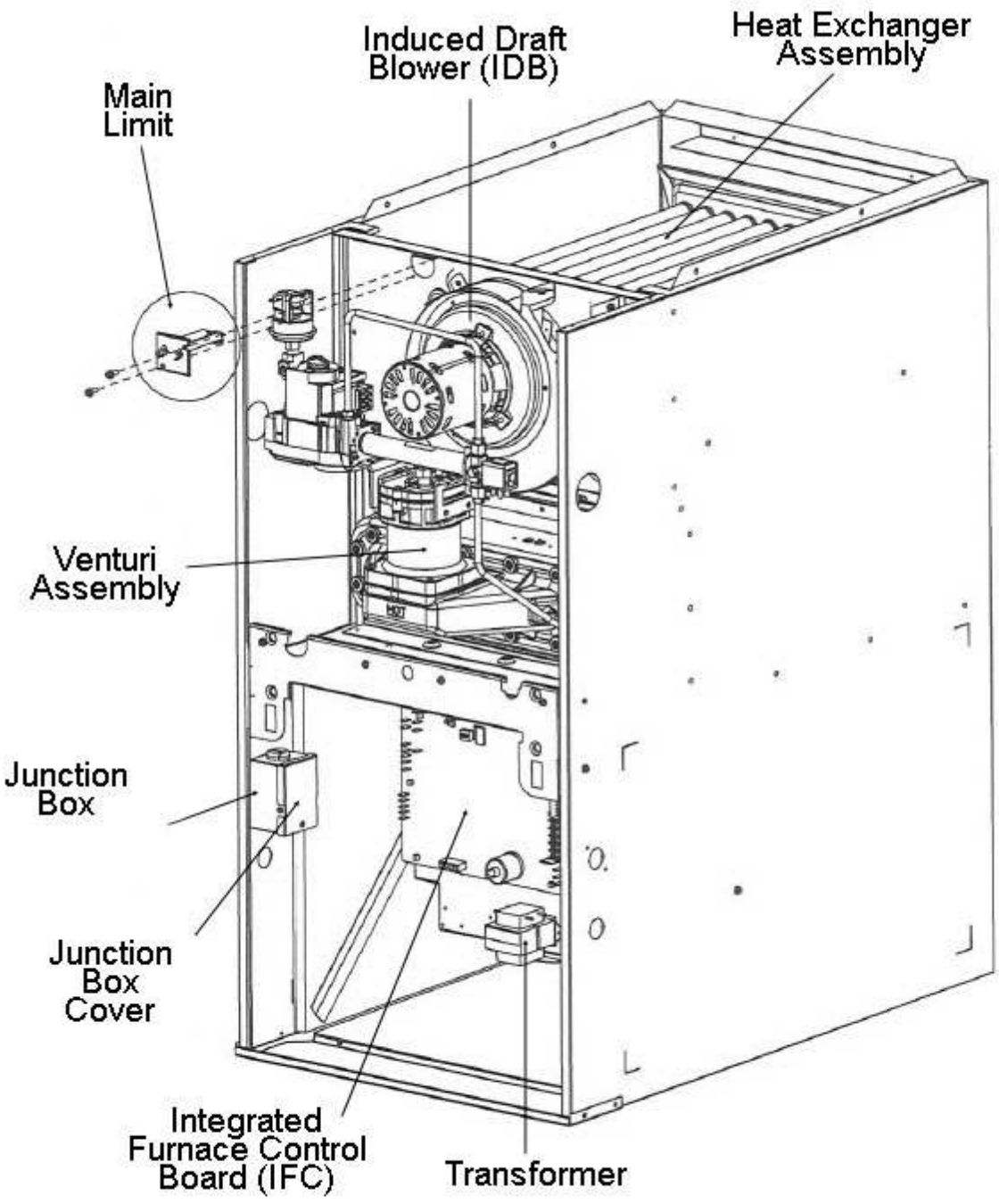

CABINET VIEW 1

R801V parts breakdown: Junction Box

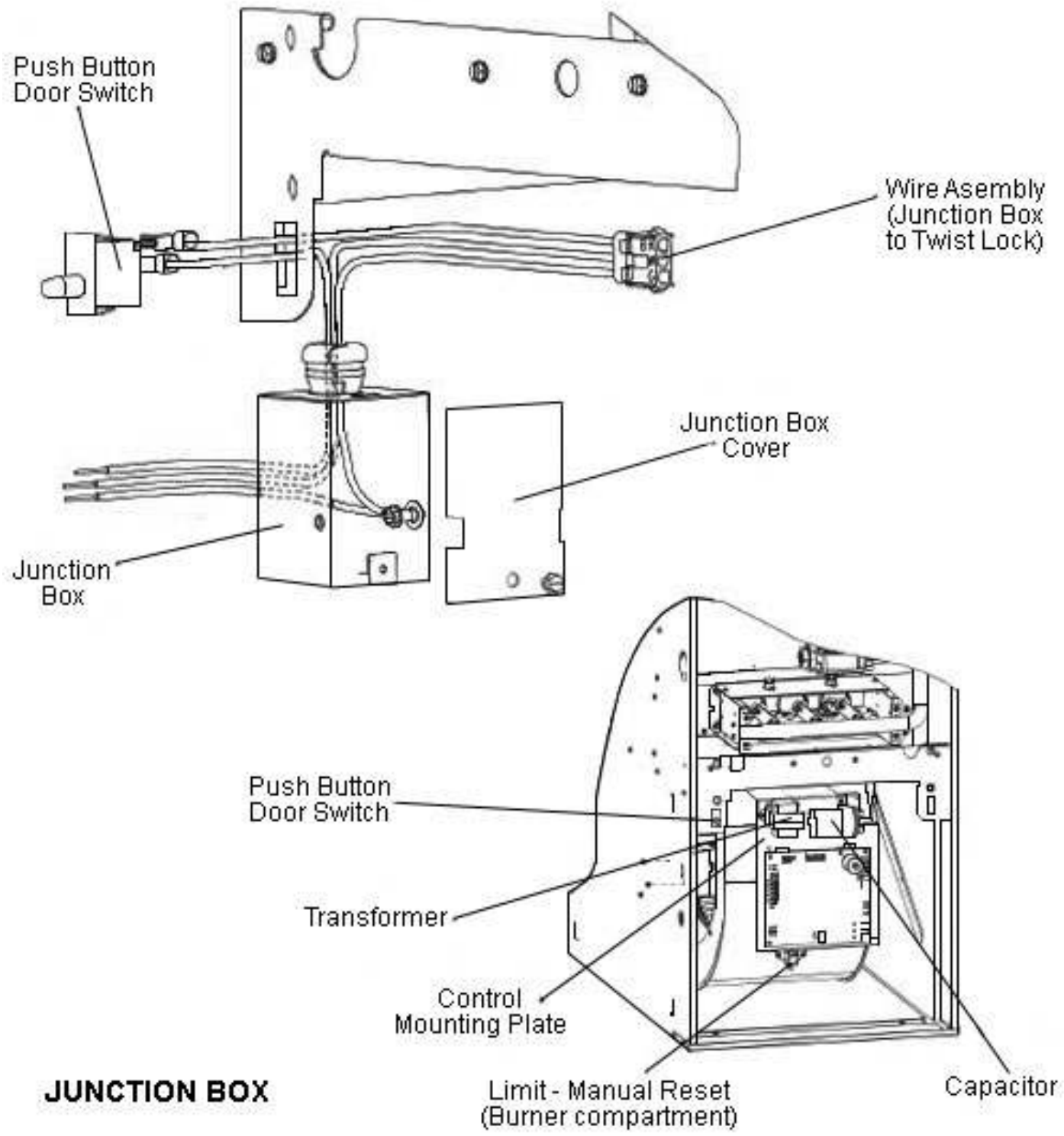

JUNCTION BOX

R801V parts breakdown: Blower Assembly

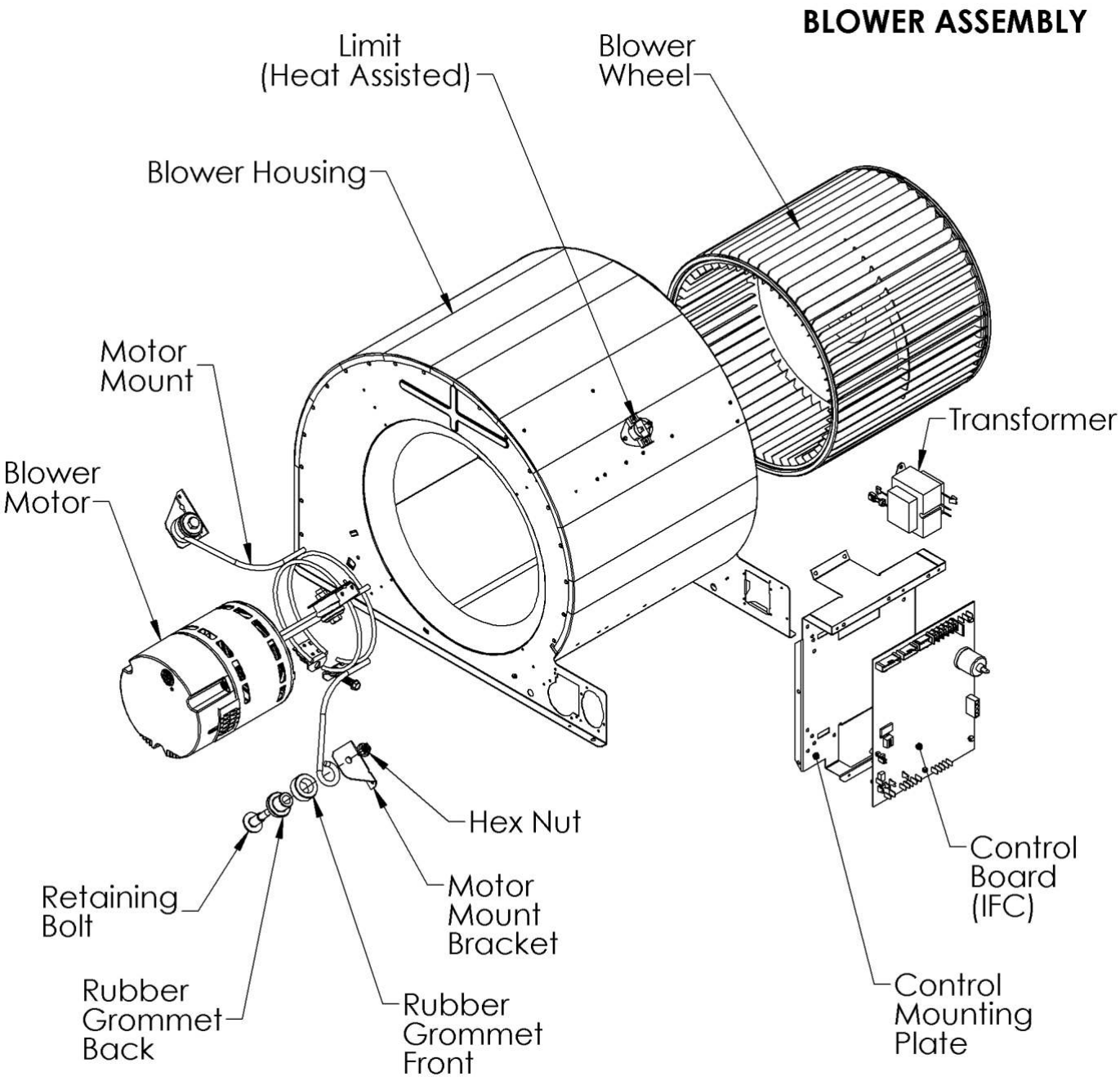

R801V parts breakdown: Inner Cabinet View2

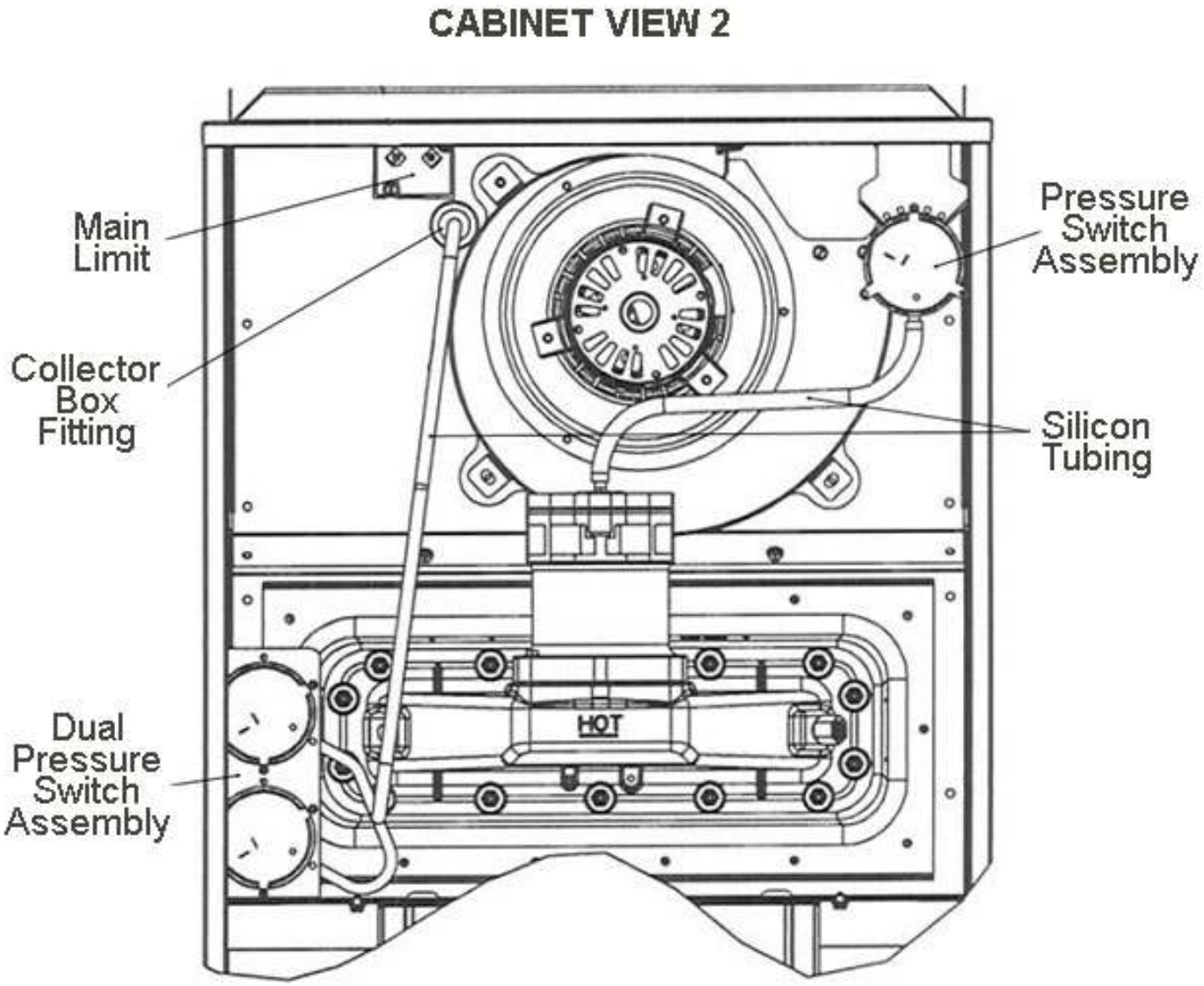

R801V parts breakdown: Blower Assembly

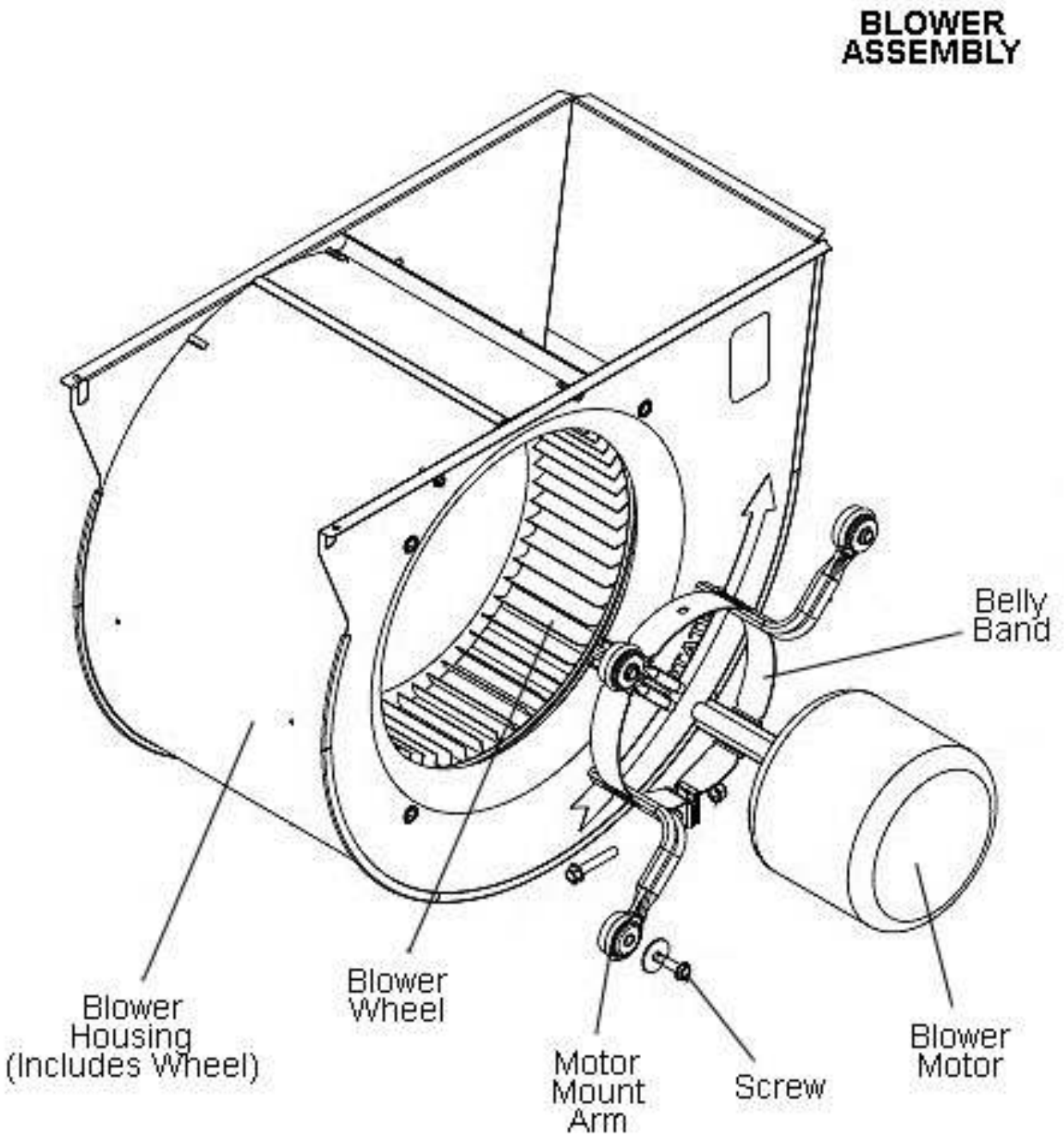

R801V parts breakdown: Junction Box

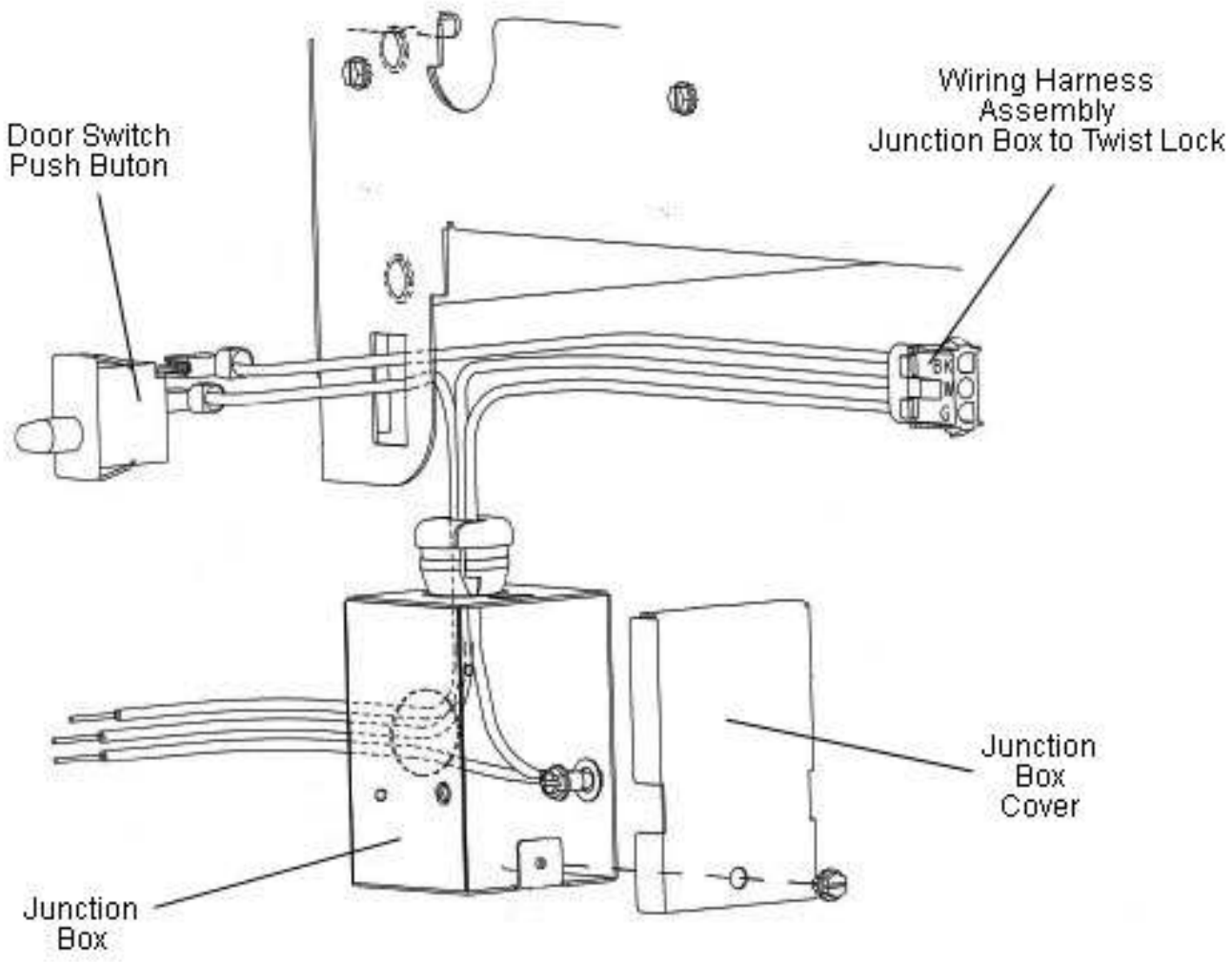

JUNCTION BOX

R801V parts breakdown: Burner Assembly

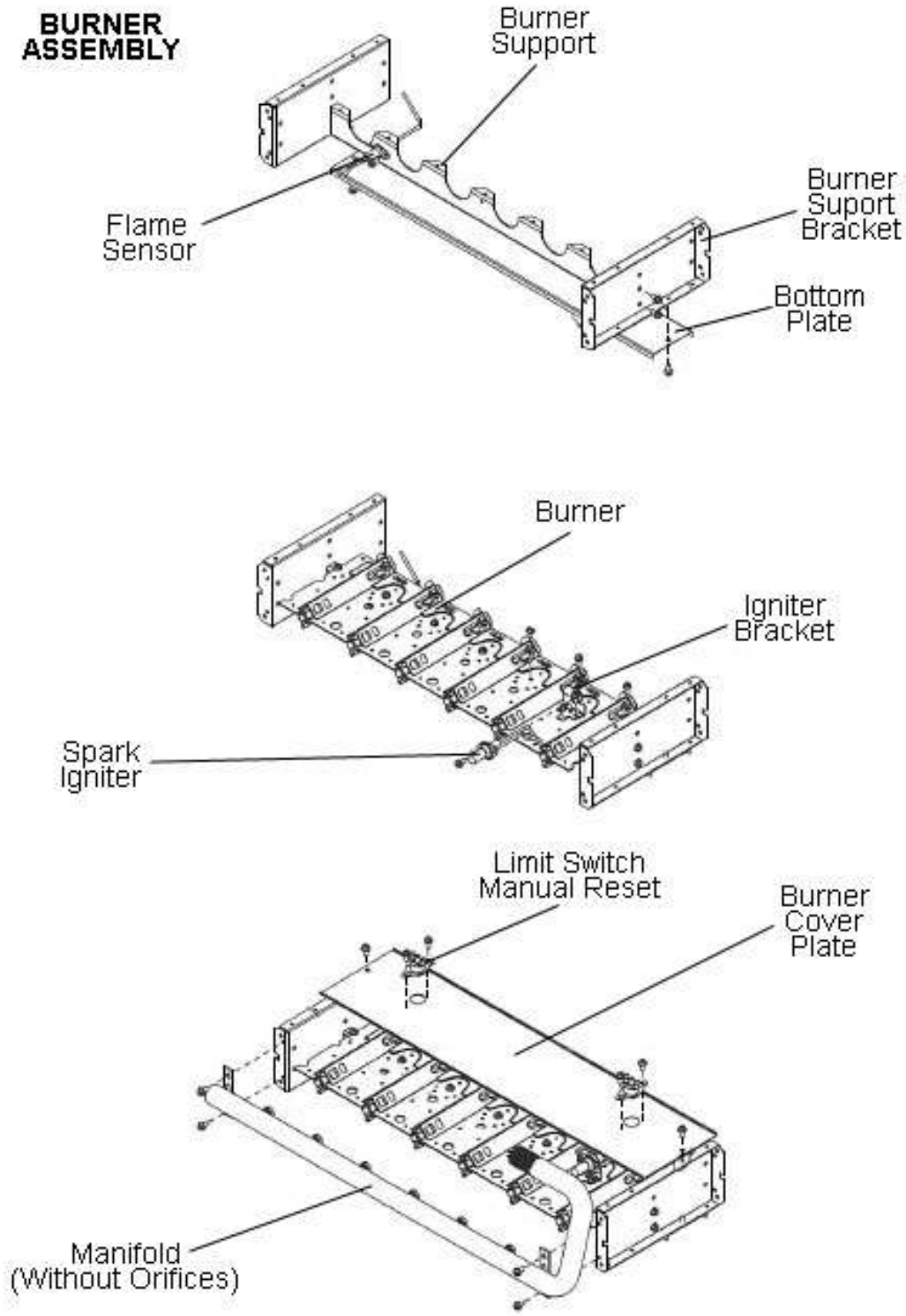

R801V parts breakdown: Burner Assembly

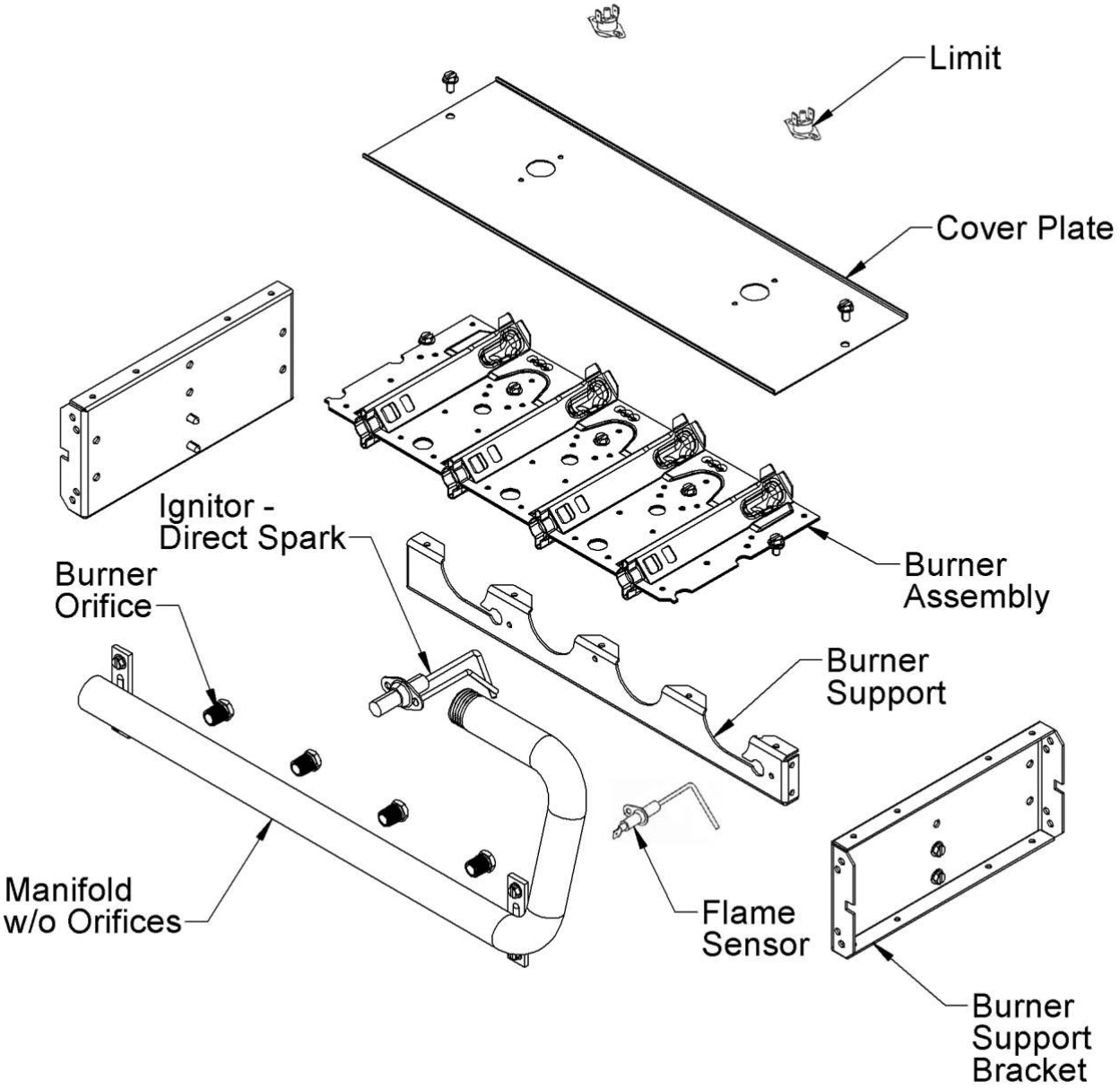

R801V parts breakdown: Blower Assembly

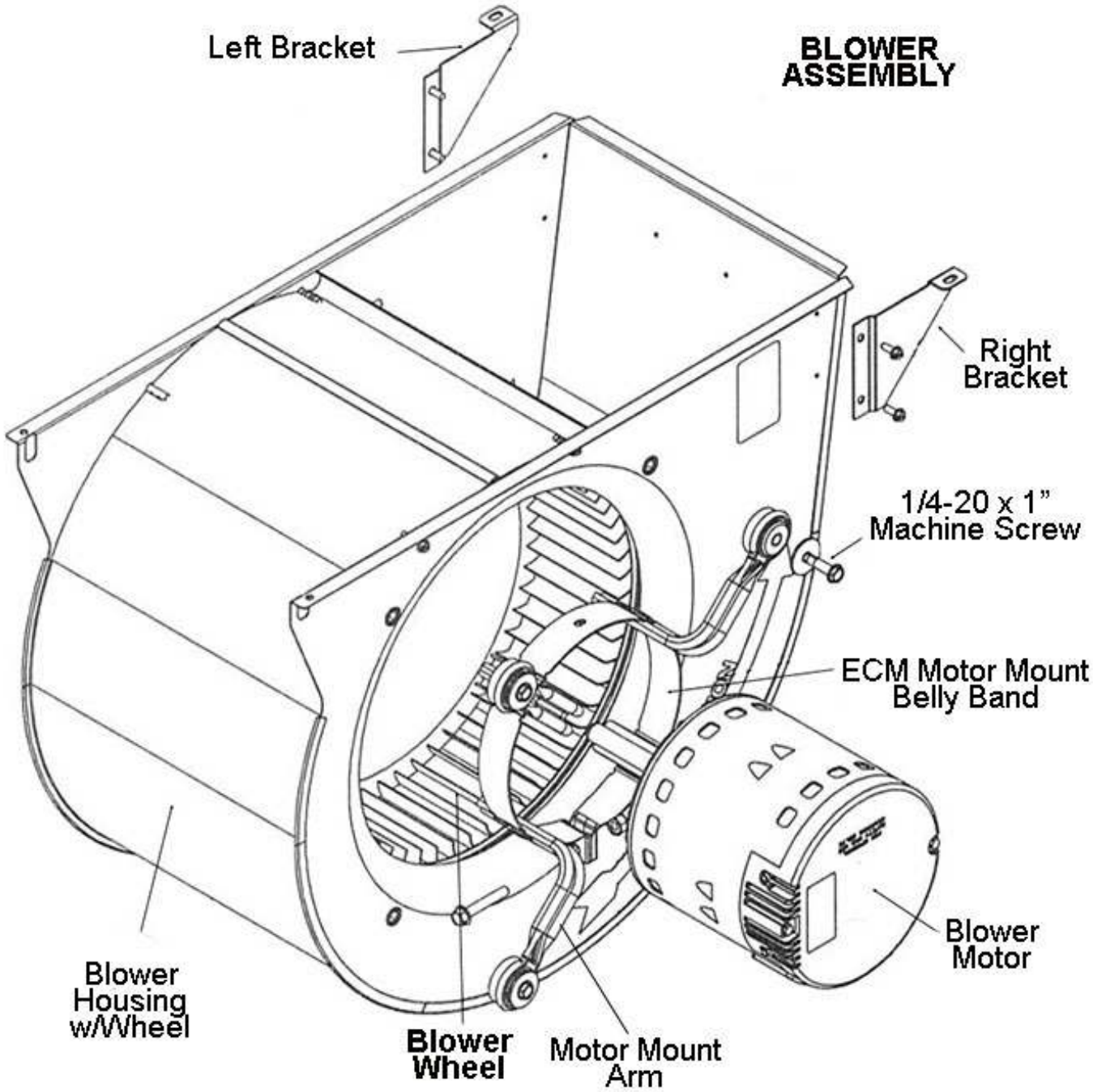

R801V parts breakdown: NOx Insert Assembly

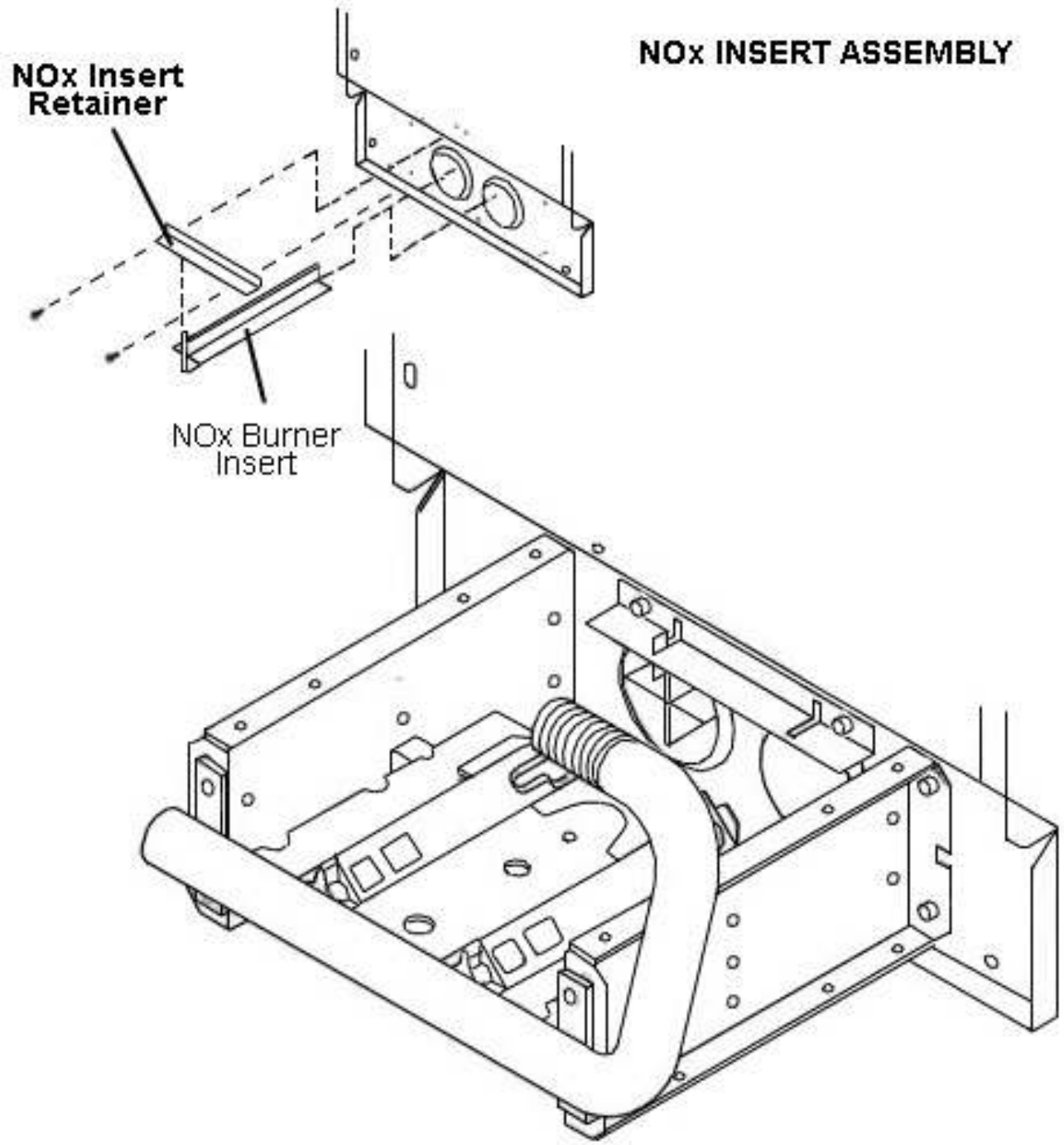

R801V parts breakdown: Venturi Assy ULN

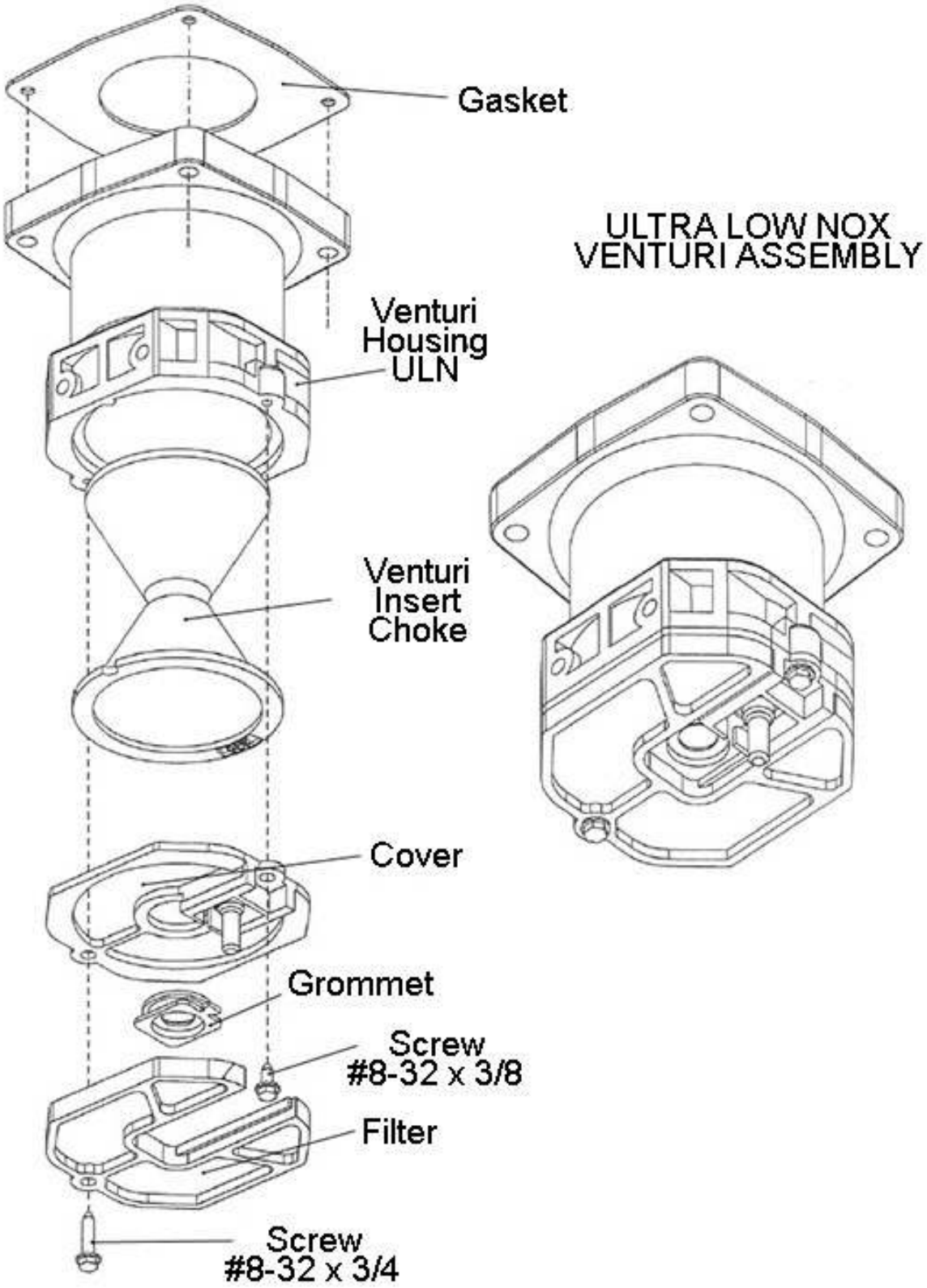

R801V parts breakdown: Blower IFC Board

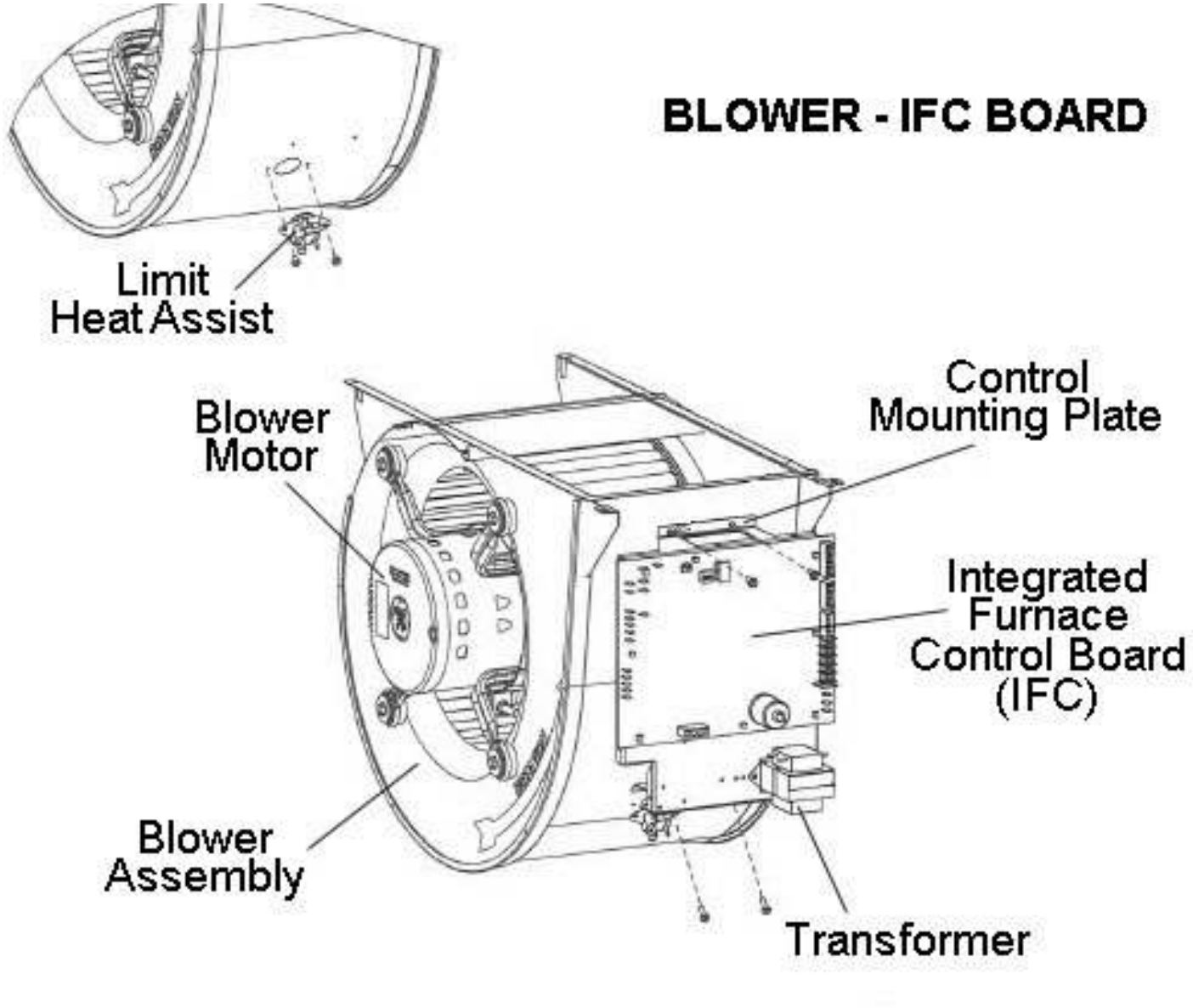

R801V parts breakdown: Fuel-Intake-ULN

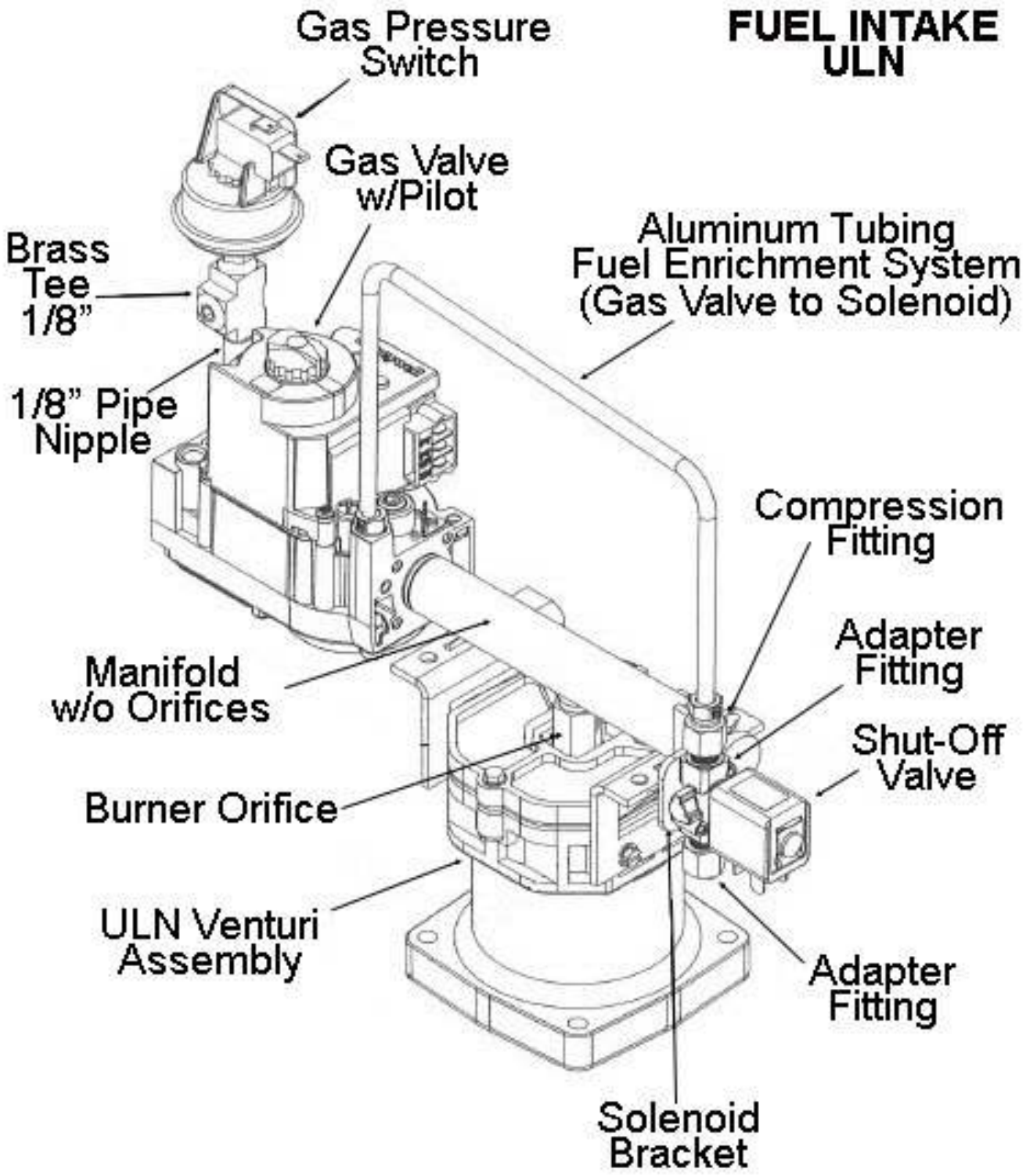

R801V parts breakdown: Burner Assembly ULN

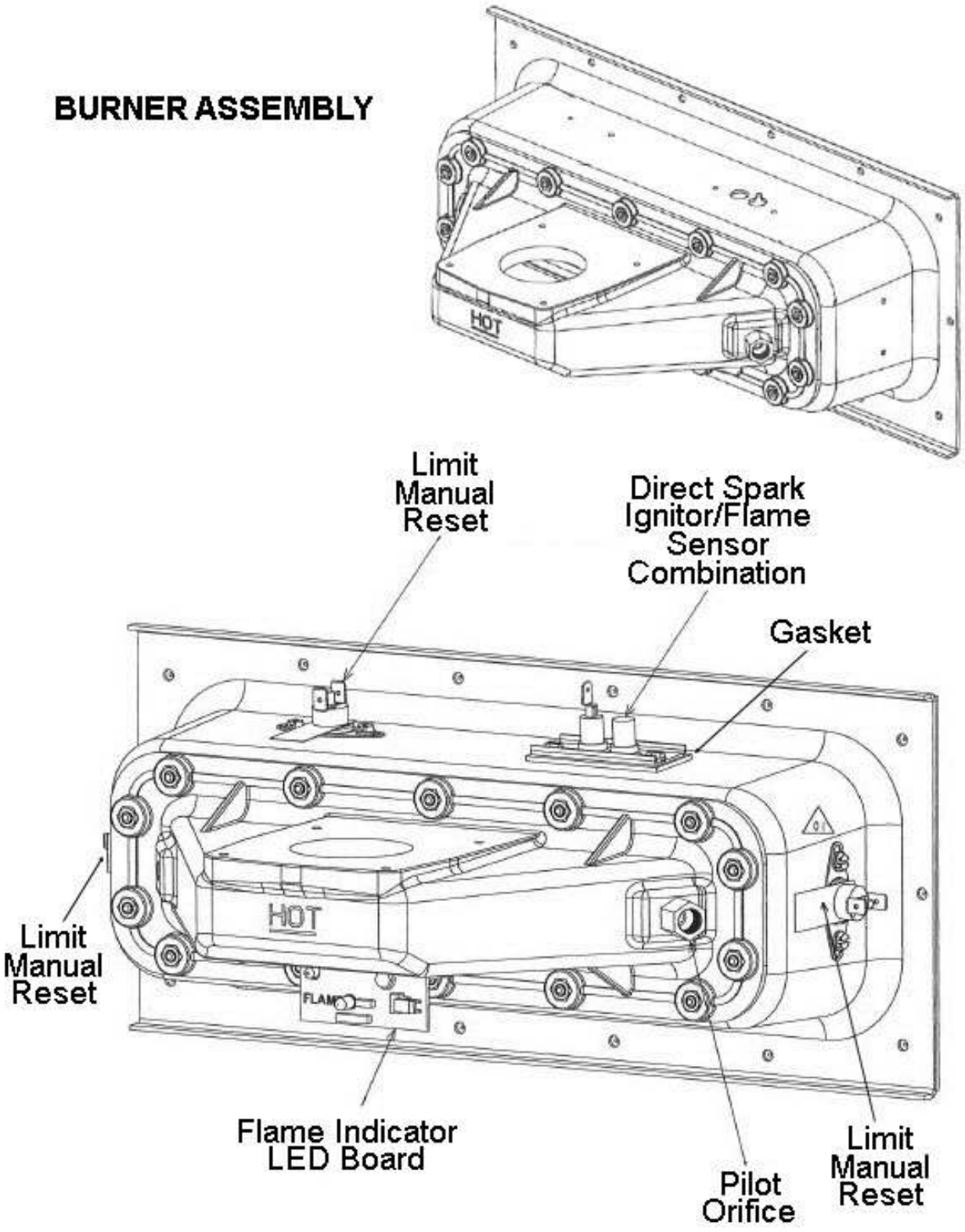

R801V parts breakdown: Fuel Intake-Burner Assembly ULN

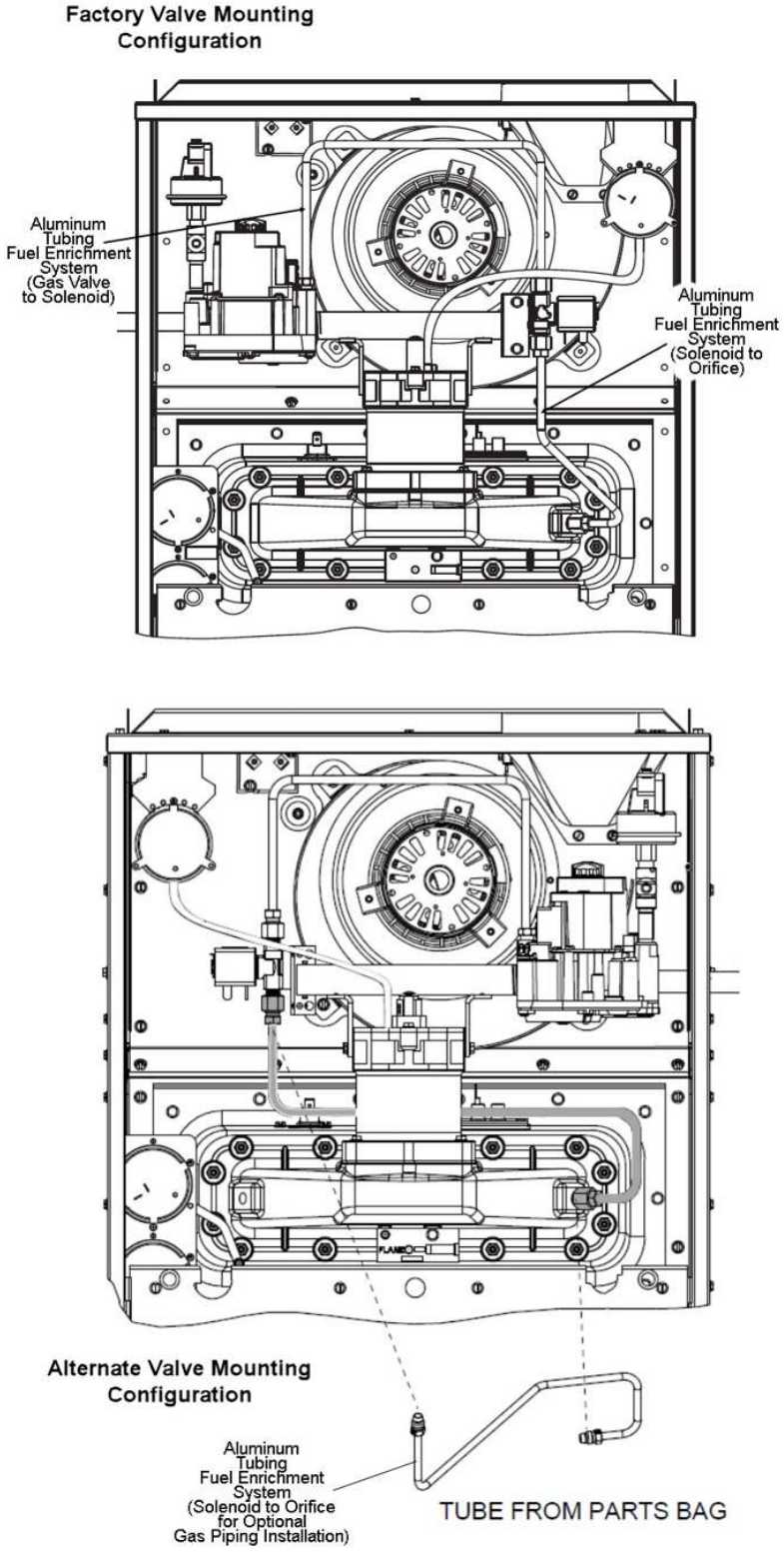

R801V parts breakdown: Fuel Intake-Burner Assembly ULN

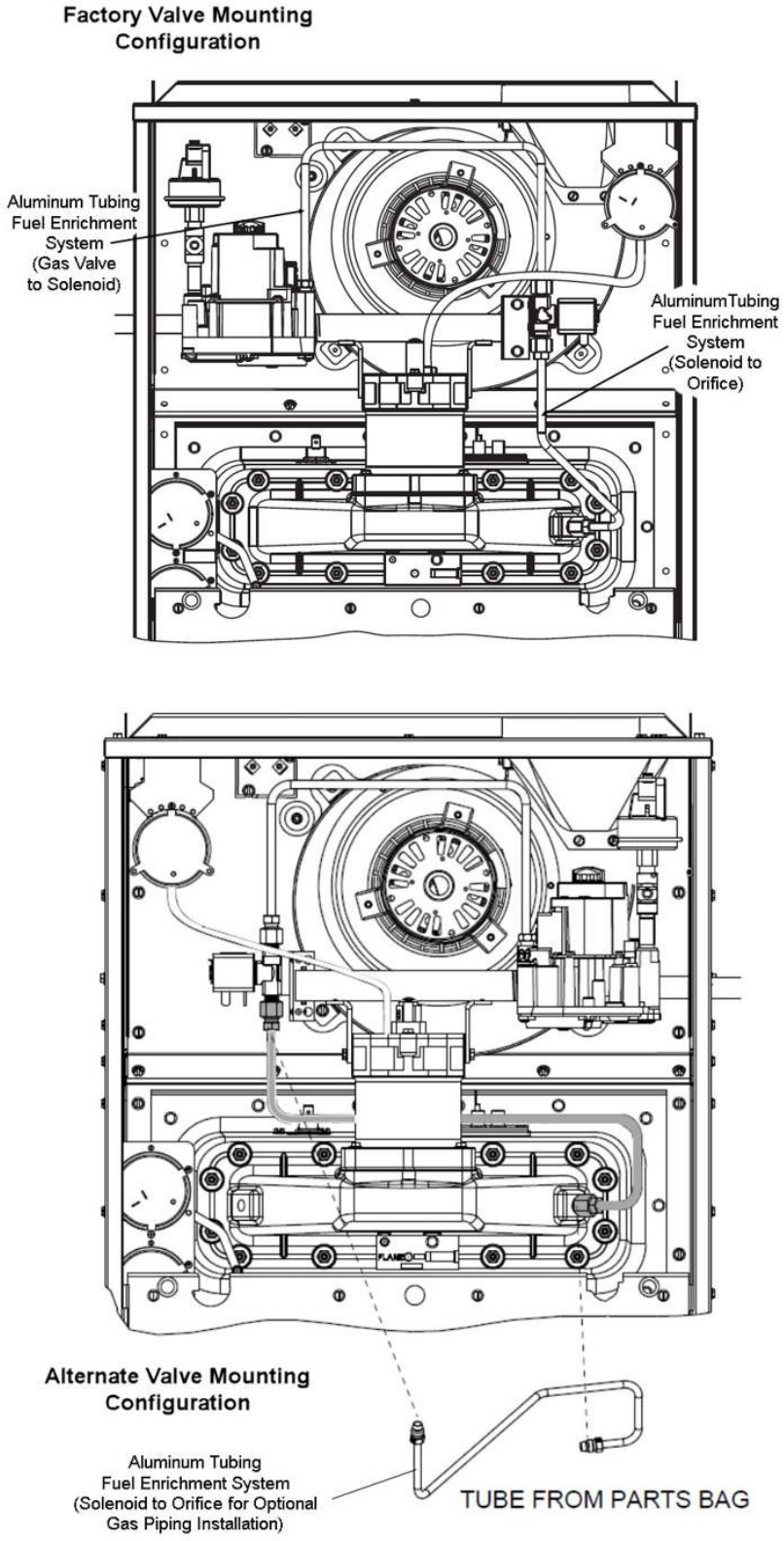

Motors & fans

Part No.	Description	Qty	Replaced By	Fits Models
AS-104887-14	Blower Assembly	1		R801VA050417MUA
AS-104887-15	Blower Assembly	1		R801VA070417MUA
AS-104887-16	Blower Assembly	1		R801VA100521MUA
AS-108518-01	Blower Assembly	1		R801V0503A14UHNCAP, R801V0503A14UHSCAP
AS-108519-01	Blower Assembly	1		R801V1005A21UHNCAP, R801V1005A21UHSCAP, R801V1255A24UHNCAP, R801V1255A24UHSCAP
AS-108521-01	Blower Assembly	1		R801V1505A24UHNCAP, R801V1505A24UHSCAP
AS-108525-01	Blower Assembly	1		R801V0755A21DZNCAP, R801V0755A21DZSCAP, R801V1005A21DZNCAP, R801V1005A21DZSCAP, R801V1255A24DZNCAP, R801V1255A24DZSCAP
AS-108526-01	Blower Assembly	1		R801V0503A14DZNCAP, R801V0503A14DZSCAP
AS-108527-01	Blower Assembly	1		R801V0754A17DZNCAP, R801V0754A17DZSCAP
AS-108528-01	Blower Assembly	1		R801V0504A17UHUCAP
AS-108529-01	Blower Assembly	1		R801V0704A17UHUCAP
AS-108530-01	Blower Assembly	1		R801V1005A21UHUCAP
AS-108531-01	Blower Assembly	1		R801V0755A21UHNCAP, R801V0755A21UHSCAP
70-105433-01	Blower Housing Assembly	1		R801V0504A17UHUCAP
70-105433-02	Blower Housing Assembly	1		R801V0704A17UHUCAP
70-105433-04	Blower Housing Assembly	1		R801V1005A21UHUCAP
70-61674-04	Blower Housing w/Wheel	1		R801V0503A14DZNCAP, R801V0503A14DZSCAP
70-61674-06	Blower Housing w/Wheel	1		R801V0755A21DZNCAP, R801V0755A21DZSCAP, R801V1005A21DZNCAP, R801V1005A21DZSCAP, R801V1255A24DZNCAP, R801V1255A24DZSCAP
70-61674-21	Blower Housing w/Wheel	1		R801V0754A17DZNCAP, R801V0754A17DZSCAP
AS-105432-04	Blower shelf Assembly	1		R801V1005A21UHUCAP
70-104182-11	Housing w/Blower Wheel	1		R801V0503A14UHNCAP, R801V0503A14UHSCAP
70-104182-13	Housing w/Blower Wheel	1		R801V0504A17UHNCAP, R801V0504A17UHSCAP, R801V0754A17UHNCAP, R801V0754A17UHSCAP, R801V0755A21UHNCAP, R801V0755A21UHSCAP, R801V1004A17UHNCAP, R801V1004A17UHSCAP
70-104182-17	Housing w/Blower Wheel	1		R801V1005A21UHNCAP, R801V1005A21UHSCAP, R801V1255A24UHNCAP, R801V1255A24UHSCAP, R801V1505A24UHNCAP, R801V1505A24UHSCAP
70-105388-01	Induced Draft Blower Assembly	1		R801V0504A17UHUCAP, R801V0704A17UHUCAP, R801V1005A21UHUCAP
70-101087-81	Induced Draft Blower w/Gasket	1		R801V0503A14DZNCAP, R801V0503A14DZSCAP, R801V0503A14UHNCAP, R801V0503A14UHSCAP, R801V0504A17UHNCAP, R801V0504A17UHSCAP, R801V0754A17DZNCAP, R801V0754A17DZSCAP, R801V0754A17UHNCAP, R801V0754A17UHSCAP, R801V0755A21DZNCAP, R801V0755A21DZSCAP, R801V0755A21UHNCAP, R801V0755A21UHSCAP, R801V1004A17UHNCAP, R801V1004A17UHSCAP, R801V1005A21DZNCAP, R801V1005A21DZSCAP, R801V1005A21UHNCAP, R801V1005A21UHSCAP, R801V1255A24DZNCAP, R801V1255A24DZSCAP, R801V1255A24UHNCAP, R801V1255A24UHSCAP, R801V1505A24UHNCAP, R801V1505A24UHSCAP
51-104305-42	Motor - Eon (ECM) - 3/4 hp	1		R801VA050417MUA
51-104305-43	Motor - Eon (ECM) - 3/4 hp	1		R801VA070417MUA
51-104305-44	Motor - Eon (ECM) - 3/4 hp	1		R801VA100521MUA
51-104305-00	Motor - Eon (ECM) - 3/4 hp - BLANK	1		R801VA050417MUA, R801VA070417MUA, R801VA100521MUA
51-108483-01	Motor - SelecTech Gen 3 w/PWM (115V - 1 hp) (Programmed G3)	1		R801V0755A21DZNCAP, R801V0755A21DZSCAP, R801V0755A21UHNCAP, R801V0755A21UHSCAP, R801V1005A21DZNCAP, R801V1005A21DZSCAP, R801V1005A21UHUCAP, R801V1255A24DZNCAP, R801V1255A24DZSCAP, R801V1505A24UHNCAP, R801V1505A24UHSCAP
51-108481-01	Motor - SelecTech Gen 3 w/PWM (115V - 1/2 hp) (Programmed G3)	1		R801V0503A14DZNCAP, R801V0503A14DZSCAP, R801V0503A14UHNCAP, R801V0503A14UHSCAP

Part No.	Description	Qty	Replaced By	Fits Models
51-108482-01	Motor - SelecTech Gen 3 w/PWM (115V - 3/4 hp) (Programmed G3)	1		R801V0504A17UHUCAP, R801V0704A17UHUCAP, R801V0754A17DZNCAP, R801V0754A17DZSCAP, R801V1005A21UHNCAP, R801V1005A21UHSCAP, R801V1255A24UHNCAP, R801V1255A24UHSCAP
51-108482-03	Motor - SelecTech Gen 3 w/PWM (115V - 3/4 hp) (Programmed G3)	1		R801V0504A17UHNCAP, R801V0504A17UHSCAP, R801V0754A17UHNCAP, R801V0754A17UHSCAP, R801V1004A17UHNCAP, R801V1004A17UHSCAP
70-19929-10	Motor Mount Arm w/Grommet	1		R801V0503A14UHNCAP, R801V0503A14UHSCAP, R801V0504A17UHNCAP, R801V0504A17UHSCAP, R801V0504A17UHUCAP, R801V0704A17UHUCAP, R801V0754A17UHNCAP, R801V0754A17UHSCAP, R801V0755A21UHNCAP, R801V0755A21UHSCAP, R801V1004A17UHNCAP, R801V1004A17UHSCAP, R801V1005A21UHNCAP, R801V1005A21UHSCAP, R801V1005A21UHUCAP, R801V1255A24UHNCAP, R801V1255A24UHSCAP, R801V1505A24UHNCAP, R801V1505A24UHSCAP
70-19927-04	Motor Mount Band	1		R801V0503A14UHNCAP, R801V0503A14UHSCAP, R801V0504A17UHNCAP, R801V0504A17UHSCAP, R801V0504A17UHUCAP, R801V0704A17UHUCAP, R801V0754A17UHNCAP, R801V0754A17UHSCAP, R801V0755A21UHNCAP, R801V0755A21UHSCAP, R801V1004A17UHNCAP, R801V1004A17UHSCAP, R801V1005A21UHNCAP, R801V1005A21UHSCAP, R801V1005A21UHUCAP, R801V1255A24UHNCAP, R801V1255A24UHSCAP, R801V1505A24UHNCAP, R801V1505A24UHSCAP
70-24104-02	Support - Blower Motor	1		R801V0754A17DZNCAP, R801V0754A17DZSCAP, R801V0755A21DZNCAP, R801V0755A21DZSCAP, R801V1005A21DZNCAP, R801V1005A21DZSCAP, R801V1255A24DZNCAP, R801V1255A24DZSCAP
70-24104-04	Support - Blower Motor	1		R801V0503A14DZNCAP, R801V0503A14DZSCAP

Electrical

Part No.	Description	Qty	Replaced By	Fits Models
62-24340-05	Blower Control Board	1		R801VA050417MUA, R801VA070417MUA, R801VA100521MUA
62-108462-12	Control Board - M1 Furnace 1-Stage	1		R801V0503A14DZNCAP, R801V0503A14DZSCAP, R801V0503A14UHNCAP, R801V0503A14UHSCAP, R801V0504A17UHNCAP, R801V0504A17UHSCAP, R801V0754A17DZNCAP, R801V0754A17DZSCAP, R801V0754A17UHNCAP, R801V0754A17UHSCAP, R801V0755A21DZNCAP, R801V0755A21DZSCAP, R801V0755A21UHNCAP, R801V0755A21UHSCAP, R801V1004A17UHNCAP, R801V1004A17UHSCAP, R801V1005A21DZNCAP, R801V1005A21DZSCAP, R801V1005A21UHNCAP, R801V1005A21UHSCAP, R801V1255A24DZNCAP, R801V1255A24DZSCAP, R801V1255A24UHNCAP, R801V1255A24UHSCAP, R801V1505A24UHNCAP, R801V1505A24UHSCAP
62-109032-02	Control Board - Ultra Low Nox Furnace	1		R801V0504A17UHUCAP, R801V0704A17UHUCAP, R801V1005A21UHUCAP
42-22692-06	Door Switch	1		R801V0754A17DZNCAP, R801V0754A17DZSCAP, R801V0755A21DZNCAP, R801V0755A21DZSCAP, R801V1005A21DZNCAP, R801V1005A21DZSCAP, R801V1255A24DZNCAP, R801V1255A24DZSCAP
42-22692-09K	Door Switch Kit	1		R801VA050417MUA, R801VA070417MUA, R801VA100521MUA
ATM-3-5PK	Fuse - 3A Mini Blade Type - Automotive (5 Pack)	1		
ATM-5-5PK	Fuse - 5A Mini Blade Type - Automotive (5 Pack)	1		
62-105451-01	Integrated Furnace Control Board (IFC)	1		R801VA050417MUA, R801VA070417MUA, R801VA100521MUA
62-105451-03	Integrated Furnace Control Board (IFC)	1		R801V0504A17UHUCAP, R801V0704A17UHUCAP, R801V1005A21UHUCAP
45-106347-01	J Box Wire Assembly	1		R801V0504A17UHUCAP, R801V0704A17UHUCAP, R801V1005A21UHUCAP

Part No.	Description	Qty	Replaced By	Fits Models
45-105062-04	Main Wiring Harness Assembly - (801V/W) 1 Stage 80+ Down Flow Blower Communication (Teflon Coated Flame Sense)	1		R801V0503A14DZNCAP, R801V0503A14DZSCAP, R801V0754A17DZNCAP, R801V0754A17DZSCAP, R801V0755A21DZNCAP, R801V0755A21DZSCAP, R801V1005A21DZNCAP, R801V1005A21DZSCAP, R801V1255A24DZNCAP, R801V1255A24DZSCAP
45-108279-01	Motor Power and Control Wire Assembly	1		All models
46-24256-05	Power Factor Choke	1		R801VA050417MUA, R801VA070417MUA, R801VA100521MUA
46-101496-01	Transformer	1		R801V0503A14DZNCAP, R801V0503A14DZSCAP, R801V0754A17DZNCAP, R801V0755A21DZNCAP, R801V0755A21DZSCAP, R801V1005A21DZNCAP, R801V1005A21DZSCAP, R801V1255A24DZNCAP, R801V1255A24DZSCAP
46-24124-03	Transformer	1		R801V0754A17DZSCAP
46-102856-04	Transformer - 50VA	1		R801V0504A17UHUCAP, R801V0704A17UHUCAP, R801V1005A21UHUCAP
46-24124-06K	Transformer Kit	1		R801V0503A14UHNCAP, R801V0503A14UHSCAP, R801V0504A17UHNCAP, R801V0504A17UHSCAP, R801V0754A17UHNCAP, R801V0754A17UHSCAP, R801V0755A21UHNCAP, R801V0755A21UHSCAP, R801V1004A17UHNCAP, R801V1004A17UHSCAP, R801V1005A21UHNCAP, R801V1005A21UHSCAP, R801V1255A24UHNCAP, R801V1255A24UHSCAP, R801V1505A24UHNCAP, R801V1505A24UHSCAP
45-105484-04	Twist-Lock Wire Harness Assembly	1		R801V0504A17UHUCAP, R801V0704A17UHUCAP, R801V1005A21UHUCAP
45-106348-01	Wire Assembly	1		R801V0504A17UHUCAP, R801V0704A17UHUCAP, R801V1005A21UHUCAP
45-24371-58	Wire Assembly	1		All models
45-104317-01	Wire Assembly - ECM Motor Power	1		R801VA050417MUA, R801VA070417MUA, R801VA100521MUA
45-109037-01	Wire Harness Assembly - IFC To AH Communications	1		R801V0504A17UHUCAP, R801V0704A17UHUCAP, R801V1005A21UHUCAP
45-102785-01	Wiring Harness	1		R801V0504A17UHNCAP, R801V0504A17UHSCAP
45-105046-02	Wiring Harness	1		R801V0503A14DZNCAP, R801V0503A14DZSCAP, R801V0754A17DZNCAP, R801V0754A17DZSCAP, R801V0755A21DZNCAP, R801V0755A21DZSCAP, R801V1005A21DZNCAP, R801V1005A21DZSCAP, R801V1255A24DZNCAP, R801V1255A24DZSCAP
45-105282-01	Wiring Harness	1		R801V0504A17UHUCAP, R801V0704A17UHUCAP, R801V1005A21UHUCAP
45-24258-10	Wiring Harness	1		R801VA050417MUA, R801VA070417MUA, R801VA100521MUA
45-24371-08	Wiring Harness	1		R801V0503A14DZNCAP, R801V0503A14DZSCAP, R801V0754A17DZNCAP, R801V0754A17DZSCAP, R801V0755A21DZNCAP, R801V0755A21DZSCAP, R801V1005A21DZNCAP, R801V1005A21DZSCAP, R801V1255A24DZNCAP, R801V1255A24DZSCAP
45-24371-18	Wiring Harness	1		R801V0503A14DZNCAP, R801V0503A14DZSCAP, R801V0754A17DZNCAP, R801V0754A17DZSCAP, R801V0755A21DZNCAP, R801V0755A21DZSCAP, R801V1005A21DZNCAP, R801V1005A21DZSCAP, R801V1255A24DZNCAP, R801V1255A24DZSCAP
45-105485-01	Wiring Harness Assembly (Twist-Lock)	1		R801VA050417MUA, R801VA070417MUA, R801VA100521MUA
45-104932-07	Wiring Harness Assembly - Twist-Lock Single Stage 80+ w/ W-R Gas Valve (Teflon Coated Flame Sense)	1		R801V0503A14UHNCAP, R801V0503A14UHSCAP, R801V0504A17UHNCAP, R801V0504A17UHSCAP, R801V0754A17UHNCAP, R801V0754A17UHSCAP, R801V0755A21UHNCAP, R801V0755A21UHSCAP, R801V1004A17UHNCAP, R801V1004A17UHSCAP, R801V1005A21UHNCAP, R801V1005A21UHSCAP, R801V1255A24UHNCAP, R801V1255A24UHSCAP, R801V1505A24UHNCAP, R801V1505A24UHSCAP

Valves & switches

Part No.	Description	Qty	Replaced By	Fits Models
42-105443-01	Gas Pressure Switch	1		R801V0504A17UHUCAP, R801V0704A17UHUCAP, R801V1005A21UHUCAP
60-105510-02	Gas Shutoff Valve	1		R801V0504A17UHUCAP, R801V0704A17UHUCAP, R801V1005A21UHUCAP
47-106919-01	Limit Control - Manual Reset	1		R801V0504A17UHUCAP, R801V0704A17UHUCAP, R801V1005A21UHUCAP
47-104990-01	Limit Switch - Auto Reset (Board Mount)	1		R801V0503A14UHNCAP, R801V0503A14UHSCAP
47-104990-02	Limit Switch - Auto Reset (Board Mount)	1		R801V0504A17UHNCAP, R801V0504A17UHSCAP
47-104990-03	Limit Switch - Auto Reset (Board Mount)	1		R801V1004A17UHNCAP, R801V1004A17UHSCAP
47-104990-06	Limit Switch - Auto Reset (Board Mount)	1		R801V0704A17UHUCAP
47-104990-07	Limit Switch - Auto Reset (Board Mount)	1		R801VA050417MUA, R801VA100521MUA
47-104990-08	Limit Switch - Auto Reset (Board Mount)	1		R801V1005A21UHNCAP, R801V1005A21UHSCAP
47-25349-13	Limit Switch - Auto Reset (Board Mount)	1		R801V0754A17DZNCAP, R801V0754A17DZSCAP
47-25349-16	Limit Switch - Auto Reset (Board Mount)	1		R801V0755A21DZNCAP, R801V0755A21DZSCAP
47-25349-17	Limit Switch - Auto Reset (Board Mount)	1		R801V1005A21DZNCAP, R801V1005A21DZSCAP
47-104990-04K	Limit Switch Kit - Auto Reset (Board Mount)	1		R801V0504A17UHUCAP, R801V0754A17UHNCAP, R801V0754A17UHSCAP, R801V0755A21UHNCAP, R801V0755A21UHSCAP, R801V1005A21UHUCAP, R801V1255A24UHNCAP, R801V1255A24UHSCAP, R801V1505A24UHNCAP, R801V1505A24UHSCAP
47-25349-02K	Limit Switch Kit - Auto Reset (Board Mount)	1		R801V1255A24DZNCAP, R801V1255A24DZSCAP
47-25349-07K	Limit Switch Kit - Auto Reset (Board Mount)	1		R801V0503A14DZNCAP, R801V0503A14DZSCAP
47-22860-01K	Limit Switch Kit - Auto Reset (HALC)	1		R801V0503A14DZNCAP, R801V0503A14DZSCAP
47-22860-06K	Limit Switch Kit - Auto Reset (HALC)	1		R801V0503A14UHNCAP, R801V0503A14UHSCAP, R801V0504A17UHNCAP, R801V0504A17UHSCAP, R801V0504A17UHUCAP, R801V0704A17UHUCAP, R801V0754A17DZNCAP, R801V0754A17DZSCAP, R801V0754A17UHNCAP, R801V0754A17UHSCAP, R801V0755A21DZNCAP, R801V0755A21DZSCAP, R801V0755A21UHNCAP, R801V0755A21UHSCAP, R801V1004A17UHNCAP, R801V1004A17UHSCAP, R801V1005A21DZNCAP, R801V1005A21DZSCAP, R801V1005A21UHNCAP, R801V1005A21UHSCAP, R801V1005A21UHUCAP, R801V1255A24DZNCAP, R801V1255A24DZSCAP, R801V1255A24UHNCAP, R801V1255A24UHSCAP, R801V1505A24UHNCAP, R801V1505A24UHSCAP
47-22861-03K	Limit Switch Kit - Manual Reset (Flanged Airstream)	1		R801V0503A14DZNCAP, R801V0503A14DZSCAP, R801V0503A14UHNCAP, R801V0503A14UHSCAP, R801V0504A17UHNCAP, R801V0504A17UHSCAP, R801V0754A17DZNCAP, R801V0754A17DZSCAP, R801V0754A17UHNCAP, R801V0754A17UHSCAP, R801V0755A21DZNCAP, R801V0755A21DZSCAP, R801V0755A21UHNCAP, R801V0755A21UHSCAP, R801V1004A17UHNCAP, R801V1004A17UHSCAP, R801V1005A21DZNCAP, R801V1005A21DZSCAP, R801V1005A21UHNCAP, R801V1005A21UHSCAP, R801V1255A24DZNCAP, R801V1255A24DZSCAP, R801V1255A24UHNCAP, R801V1255A24UHSCAP, R801V1505A24UHNCAP, R801V1505A24UHSCAP
42-24194-82	Pressure Switch	1		R801V0503A14DZNCAP, R801V0503A14DZSCAP, R801V0754A17DZNCAP, R801V0754A17DZSCAP, R801V0755A21DZNCAP, R801V0755A21DZSCAP, R801V1005A21DZNCAP, R801V1005A21DZSCAP, R801V1255A24DZNCAP, R801V1255A24DZSCAP
42-106255-04	Pressure Switch (-0.80")	1		R801V0504A17UHUCAP, R801V0704A17UHUCAP, R801V1005A21UHUCAP
42-102072-26	Pressure Switch Assembly (-2.10"/-1.50")	1		R801V0704A17UHUCAP
42-102072-25	Pressure Switch Assembly (-2.25"/-1.50")	1		R801V0504A17UHUCAP
42-102072-27	Pressure Switch Assembly (-2.45"/-1.50")	1		R801V1005A21UHUCAP
42-106257-01K	Pressure Switch Kit (-0.30")	1		R801V0503A14UHNCAP, R801V0503A14UHSCAP, R801V0504A17UHNCAP, R801V0504A17UHSCAP, R801V0754A17UHNCAP, R801V0754A17UHSCAP, R801V0755A21UHNCAP, R801V0755A21UHSCAP, R801V1004A17UHNCAP, R801V1004A17UHSCAP, R801V1005A21UHNCAP, R801V1005A21UHSCAP, R801V1255A24UHNCAP, R801V1255A24UHSCAP, R801V1505A24UHNCAP, R801V1505A24UHSCAP

Gas

Part No.	Description	Qty	Replaced By	Fits Models
AS-105478-01	Blower shelf Assembly	1		R801V0503A14DZNCAP, R801V0503A14DZSCAP
AS-105478-02	Blower shelf Assembly	1		R801V0754A17DZNCAP, R801V0754A17DZSCAP
AS-105478-03	Blower shelf Assembly	1		R801V0755A21DZNCAP, R801V0755A21DZSCAP, R801V1005A21DZNCAP, R801V1005A21DZSCAP
AS-105478-06	Blower shelf Assembly	1		R801V1255A24DZNCAP, R801V1255A24DZSCAP
AS-104944-01	Burner Assembly	1		R801V0504A17UHSCAP
AS-104944-11	Burner Assembly	1		R801V0504A17UHNCAP
AS-104944-21	Burner Assembly	1		R801V0503A14UHSCAP
AS-104944-22	Burner Assembly	1		R801V0754A17UHSCAP, R801V0755A21UHSCAP
AS-104944-23	Burner Assembly	1		R801V1004A17UHSCAP, R801V1005A21UHSCAP
AS-104944-24	Burner Assembly	1		R801V1255A24UHSCAP
AS-104944-25	Burner Assembly	1		R801V1505A24UHSCAP
AS-104944-31	Burner Assembly	1		R801V0503A14UHNCAP
AS-104944-32	Burner Assembly	1		R801V0754A17UHNCAP, R801V0755A21UHNCAP
AS-104944-33	Burner Assembly	1		R801V1004A17UHNCAP, R801V1005A21UHNCAP
AS-104944-34	Burner Assembly	1		R801V1255A24UHNCAP
AS-104944-35	Burner Assembly	1		R801V1505A24UHNCAP
AS-105434-11	Burner Assembly	1		R801V0504A17UHUCAP
AS-105434-12	Burner Assembly	1		R801V0704A17UHUCAP
AS-105434-13	Burner Assembly	1		R801V1005A21UHUCAP
AS-60993-12	Burner Assembly	1		R801V0503A14DZNCAP, R801V0503A14DZSCAP, R801V0503A14UHNCAP, R801V0503A14UHSCAP, R801V0504A17UHNCAP, R801V0504A17UHSCAP
AS-60993-13	Burner Assembly	1		R801V0754A17DZNCAP, R801V0754A17DZSCAP, R801V0754A17UHNCAP, R801V0754A17UHSCAP, R801V0755A21DZNCAP, R801V0755A21DZSCAP, R801V0755A21UHNCAP, R801V0755A21UHSCAP
AS-60993-14	Burner Assembly	1		R801V1004A17UHNCAP, R801V1004A17UHSCAP, R801V1005A21DZNCAP, R801V1005A21DZSCAP, R801V1005A21UHNCAP, R801V1005A21UHSCAP
AS-60993-15	Burner Assembly	1		R801V1255A24DZNCAP, R801V1255A24DZSCAP, R801V1255A24UHNCAP, R801V1255A24UHSCAP
AS-60993-16	Burner Assembly	1		R801V1505A24UHNCAP, R801V1505A24UHSCAP
AS-60998-11	Burner Assembly	1		R801V0503A14DZNCAP, R801V0503A14DZSCAP
AS-60998-12	Burner Assembly	1		R801V0754A17DZNCAP, R801V0754A17DZSCAP, R801V0755A21DZNCAP, R801V0755A21DZSCAP
AS-60998-13	Burner Assembly	1		R801V1005A21DZNCAP, R801V1005A21DZSCAP
AS-60998-14	Burner Assembly	1		R801V1255A24DZNCAP, R801V1255A24DZSCAP
82-19622-02	Fitting - Brass Loxit 1/4 in.	1		R801V0504A17UHUCAP, R801V0704A17UHUCAP, R801V1005A21UHUCAP
82-105493-01	Fitting, Adapter	1		R801V0504A17UHUCAP, R801V0704A17UHUCAP, R801V1005A21UHUCAP
62-105573-01	Flame Sensor (LED) Board	1		R801V0504A17UHUCAP, R801V0704A17UHUCAP, R801V1005A21UHUCAP
62-23543-01K	Flame Sensor Kit	1		R801V0503A14DZNCAP, R801V0503A14DZSCAP, R801V0503A14UHNCAP, R801V0503A14UHSCAP, R801V0504A17UHNCAP, R801V0504A17UHSCAP, R801V0754A17DZNCAP, R801V0754A17DZSCAP, R801V0754A17UHNCAP, R801V0754A17UHSCAP, R801V0755A21DZNCAP, R801V0755A21DZSCAP, R801V0755A21UHNCAP, R801V0755A21UHSCAP, R801V1004A17UHNCAP, R801V1004A17UHSCAP, R801V1005A21DZNCAP, R801V1005A21DZSCAP, R801V1005A21UHNCAP, R801V1005A21UHSCAP, R801V1255A24DZNCAP, R801V1255A24DZSCAP, R801V1255A24UHNCAP, R801V1255A24UHSCAP, R801V1505A24UHNCAP, R801V1505A24UHSCAP
60-105663-01	Gas Valve	1		R801V0504A17UHUCAP, R801V0704A17UHUCAP, R801V1005A21UHUCAP
AS-100560-01	Heat Exchanger	1		R801V0754A17UHNCAP, R801V0754A17UHSCAP

Part No.	Description	Qty	Replaced By	Fits Models
AS-100561-01	Heat Exchanger	1		R801V0754A17DZSCAP
AS-100561-02	Heat Exchanger	1		R801V0754A17DZNCAP
AS-61579-04	Heat Exchanger	1		R801V1005A21UHNCAP, R801V1005A21UHSCAP
AS-61579-05	Heat Exchanger	1		R801V1255A24UHNCAP, R801V1255A24UHSCAP
AS-61579-06	Heat Exchanger	1		R801V1505A24UHNCAP, R801V1505A24UHSCAP
AS-61579-07	Heat Exchanger	1		R801V1004A17UHNCAP, R801V1004A17UHSCAP
AS-61579-12	Heat Exchanger	1		R801V0755A21UHNCAP, R801V0755A21UHSCAP
AS-61579-13	Heat Exchanger	1		R801V0504A17UHNCAP, R801V0504A17UHSCAP
AS-61579-14	Heat Exchanger	1		R801V0503A14UHNCAP, R801V0503A14UHSCAP
AS-66997-04	Heat Exchanger	1		R801V1005A21DZSCAP
AS-66997-05	Heat Exchanger	1		R801V1255A24DZSCAP
AS-66997-11	Heat Exchanger	1		R801V0503A14DZSCAP
AS-66997-13	Heat Exchanger	1		R801V0503A14DZNCAP
AS-66997-17	Heat Exchanger	1		R801V1005A21DZNCAP
AS-66997-18	Heat Exchanger	1		R801V1255A24DZNCAP
AS-66997-22	Heat Exchanger	1		R801V0755A21DZSCAP
AS-66997-24	Heat Exchanger	1		R801V0755A21DZNCAP
62-24164-07	Ignitor - Direct Spark Ignition (DSI)	1		R801V0503A14UHNCAP, R801V0503A14UHSCAP, R801V0504A17UHNCAP, R801V0504A17UHSCAP, R801V0754A17UHNCAP, R801V0754A17UHSCAP, R801V0755A21UHNCAP, R801V0755A21UHSCAP, R801V1004A17UHNCAP, R801V1004A17UHSCAP, R801V1005A21UHNCAP, R801V1005A21UHSCAP, R801V1255A24UHNCAP, R801V1255A24UHSCAP, R801V1505A24UHNCAP, R801V1505A24UHSCAP
62-24164-08	Ignitor - Direct Spark Ignition (DSI)	1		R801V0503A14DZNCAP, R801V0503A14DZSCAP, R801V0754A17DZNCAP, R801V0754A17DZSCAP, R801V0755A21DZNCAP, R801V0755A21DZSCAP, R801V1005A21DZNCAP, R801V1005A21DZSCAP, R801V1255A24DZNCAP, R801V1255A24DZSCAP
62-105486-01	Orifice	1		R801V0504A17UHUCAP, R801V0704A17UHUCAP, R801V1005A21UHUCAP
62-22175-42	Orifice	1		R801V0503A14DZNCAP, R801V0503A14DZSCAP, R801V0503A14UHNCAP, R801V0503A14UHSCAP, R801V0504A17UHNCAP, R801V0504A17UHSCAP, R801V0754A17DZNCAP, R801V0754A17DZSCAP, R801V0754A17UHNCAP, R801V0754A17UHSCAP, R801V0755A21DZNCAP, R801V0755A21DZSCAP, R801V0755A21UHNCAP, R801V0755A21UHSCAP, R801V1004A17UHNCAP, R801V1004A17UHSCAP, R801V1005A21DZNCAP, R801V1005A21DZSCAP, R801V1005A21UHNCAP, R801V1005A21UHSCAP, R801V1255A24DZNCAP, R801V1255A24DZSCAP, R801V1255A24UHNCAP, R801V1255A24UHSCAP, R801V1505A24UHNCAP, R801V1505A24UHSCAP
81-105614-01	Pressure Tap Fitting	1		R801V0504A17UHUCAP, R801V0704A17UHUCAP, R801V1005A21UHUCAP
60-109385-01	Single Stage Gas Valve - NG	1		R801V0503A14DZNCAP, R801V0503A14DZSCAP, R801V0503A14UHNCAP, R801V0503A14UHSCAP, R801V0504A17UHNCAP, R801V0504A17UHSCAP, R801V0754A17DZNCAP, R801V0754A17DZSCAP, R801V0754A17UHNCAP, R801V0754A17UHSCAP, R801V0755A21DZNCAP, R801V0755A21DZSCAP, R801V0755A21UHNCAP, R801V0755A21UHSCAP, R801V1004A17UHNCAP, R801V1004A17UHSCAP, R801V1005A21DZNCAP, R801V1005A21DZSCAP, R801V1005A21UHNCAP, R801V1005A21UHSCAP, R801V1255A24DZNCAP, R801V1255A24DZSCAP, R801V1255A24UHNCAP, R801V1255A24UHSCAP, R801V1505A24UHNCAP, R801V1505A24UHSCAP
82-105497-01	Tube - Fuel Enrichment System	1		R801V0504A17UHUCAP, R801V0704A17UHUCAP, R801V1005A21UHUCAP
82-105497-02	Tube - Fuel Enrichment System	1		R801V0504A17UHUCAP, R801V0704A17UHUCAP
82-105497-03	Tube - Fuel Enrichment System	1		R801V0504A17UHUCAP, R801V0704A17UHUCAP
82-105497-04	Tube - Fuel Enrichment System	1		R801V1005A21UHUCAP
82-105497-05	Tube - Fuel Enrichment System	1		R801V1005A21UHUCAP

Cabinet & hardware

Part No.	Description	Qty	Replaced By	Fits Models
AE-101077-01	Air Deflector - Intake	1		R801V0504A17UHNCAP, R801V0504A17UHSCAP, R801V0754A17UHNCAP, R801V0754A17UHSCAP, R801V0755A21UHNCAP, R801V0755A21UHSCAP, R801V1004A17UHNCAP, R801V1004A17UHSCAP, R801V1005A21UHNCAP, R801V1005A21UHSCAP, R801V1255A24UHNCAP, R801V1255A24UHSCAP, R801V1505A24UHNCAP, R801V1505A24UHSCAP
AE-101077-02	Air Deflector - Intake	1		R801V0503A14UHNCAP, R801V0503A14UHSCAP
AE-104758-01	Angle Bracket	1		R801V0503A14UHNCAP, R801V0503A14UHSCAP
AE-104758-02	Angle Bracket	1		R801V0504A17UHNCAP, R801V0504A17UHSCAP, R801V0754A17UHNCAP, R801V0754A17UHSCAP, R801V1004A17UHNCAP, R801V1004A17UHSCAP
AE-104758-03	Angle Bracket	1		R801V0755A21UHNCAP, R801V0755A21UHSCAP, R801V1005A21UHNCAP, R801V1005A21UHSCAP
AE-104758-04	Angle Bracket	1		R801V1255A24UHNCAP, R801V1255A24UHSCAP, R801V1505A24UHNCAP, R801V1505A24UHSCAP
10-66994-01	Baffle - Rear	1		R801V0503A14DZNCAP, R801V0503A14DZSCAP
10-66994-02	Baffle - Rear	1		R801V0754A17DZNCAP, R801V0754A17DZSCAP
10-66994-04	Baffle - Rear	1		R801V1255A24DZNCAP, R801V1255A24DZSCAP
10-66994-06	Baffle - Rear	1		R801V0755A21DZNCAP, R801V0755A21DZSCAP, R801V1005A21DZNCAP, R801V1005A21DZSCAP
AE-61607-01	Baffle - Rear	1		R801V0504A17UHNCAP, R801V0504A17UHSCAP, R801V0704A17UHUCAP, R801V0754A17UHNCAP, R801V0754A17UHSCAP, R801V1004A17UHNCAP, R801V1004A17UHSCAP
AE-61666-01	Baffle - Rear	1		R801V0503A14UHNCAP, R801V0503A14UHSCAP
AE-61667-01	Baffle - Rear	1		R801V0755A21UHNCAP, R801V0755A21UHSCAP, R801V1005A21UHNCAP, R801V1005A21UHSCAP, R801V1005A21UHUCAP
AE-61669-01	Baffle - Rear	1		R801V1505A24UHNCAP, R801V1505A24UHSCAP
AE-61670-01	Baffle - Rear	1		R801V1255A24UHNCAP, R801V1255A24UHSCAP
10-101899-03	Baffle - Side	1		R801V0704A17UHUCAP, R801V1005A21UHUCAP
10-101899-04	Baffle - Side	1		R801V0704A17UHUCAP, R801V1005A21UHUCAP
10-105516-01	Baffle - Side	1		R801V0504A17UHUCAP, R801V0704A17UHUCAP
10-105516-02	Baffle - Side	1		R801V0504A17UHUCAP, R801V0704A17UHUCAP
AE-100548-01	Baffle - Side	1		R801V1004A17UHNCAP, R801V1004A17UHSCAP
AE-101899-01	Baffle - Side	1		R801V0755A21DZNCAP, R801V0755A21DZSCAP, R801V0755A21UHNCAP, R801V0755A21UHSCAP
AE-101899-02	Baffle - Side	1		R801V0755A21DZNCAP, R801V0755A21DZSCAP, R801V0755A21UHNCAP, R801V0755A21UHSCAP
AE-61606-01	Baffle - Side	1		R801V0503A14UHNCAP, R801V0503A14UHSCAP, R801V0754A17DZNCAP, R801V0754A17DZSCAP, R801V0754A17UHNCAP, R801V0754A17UHSCAP
AE-61665-01	Baffle - Side	1		R801V1255A24DZNCAP, R801V1255A24DZSCAP, R801V1255A24UHNCAP, R801V1255A24UHSCAP
AE-61668-01	Baffle - Side	1		R801V1005A21DZNCAP, R801V1005A21DZSCAP, R801V1005A21UHNCAP, R801V1005A21UHSCAP
10-66986-25	Base Pan - 14 in. (Rheem Warm Dark Gray)	1		R801V0503A14DZNCAP, R801V0503A14DZSCAP
10-66986-26	Base Pan - 17.5 in. (Rheem Warm Dark Gray)	1		R801V0754A17DZNCAP, R801V0754A17DZSCAP
10-66986-27	Base Pan - 21 in. (Rheem Warm Dark Gray)	1		R801V0755A21DZNCAP, R801V0755A21DZSCAP, R801V1005A21DZNCAP, R801V1005A21DZSCAP
10-66986-28	Base Pan - 24.5 in. (Rheem Warm Dark Gray)	1		R801V1255A24DZNCAP, R801V1255A24DZSCAP
63-106763-01	Black Oxide Square Drive Screw, 8-18 x 1/2 in.	1		All models

Part No.	Description	Qty	Replaced By	Fits Models
63-106763-02	Black Oxide Square Drive Screw, 8-18 x 1/4 in.	1		R801V0503A14DZNCAP, R801V0503A14DZSCAP, R801V0503A14UHNCAP, R801V0503A14UHSCAP, R801V0504A17UHSCAP, R801V0504A17UHUCAP, R801V0704A17UHUCAP, R801V0754A17DZNCAP, R801V0754A17DZSCAP, R801V0754A17UHNCAP, R801V0754A17UHSCAP, R801V0755A21DZNCAP, R801V0755A21DZSCAP, R801V0755A21UHNCAP, R801V0755A21UHSCAP, R801V1004A17UHNCAP, R801V1004A17UHSCAP, R801V1005A21DZNCAP, R801V1005A21DZSCAP, R801V1005A21UHNCAP, R801V1005A21UHSCAP, R801V1005A21UHUCAP, R801V1255A24DZNCAP, R801V1255A24DZSCAP, R801V1255A24UHNCAP, R801V1255A24UHSCAP, R801V1505A24UHNCAP, R801V1505A24UHSCAP
AS-104043-11X	Blower Door/Label Kit	1		R801V0504A17UHNCAP, R801V0504A17UHSCAP, R801V0754A17UHNCAP, R801V0754A17UHSCAP, R801V1004A17UHNCAP, R801V1004A17UHSCAP
AS-104043-12X	Blower Door/Label Kit	1		R801V0755A21UHNCAP, R801V0755A21UHSCAP, R801V1005A21UHNCAP, R801V1005A21UHSCAP
AS-104043-13X	Blower Door/Label Kit	1		R801V1255A24UHNCAP, R801V1255A24UHSCAP, R801V1505A24UHNCAP, R801V1505A24UHSCAP
AS-104809-01	Blower Shelf Assembly	1		R801V0503A14UHNCAP, R801V0503A14UHSCAP
AS-104809-02	Blower Shelf Assembly	1		R801V0504A17UHNCAP, R801V0504A17UHSCAP, R801V0754A17UHNCAP, R801V0754A17UHSCAP, R801V1004A17UHNCAP, R801V1004A17UHSCAP
AS-104809-04	Blower Shelf Assembly	1		R801V1005A21UHNCAP, R801V1005A21UHSCAP
AS-104809-05	Blower Shelf Assembly	1		R801V1255A24UHNCAP, R801V1255A24UHSCAP, R801V1505A24UHNCAP, R801V1505A24UHSCAP
AS-105432-01	Blower Shelf Assembly	1		R801V0504A17UHUCAP
AS-105432-02	Blower Shelf Assembly	1		R801V0704A17UHUCAP
63-19919-01	Bolt, 1/4-20 x 1-1/2 in.	1		R801V0503A14UHNCAP, R801V0503A14UHSCAP, R801V0504A17UHNCAP, R801V0504A17UHSCAP, R801V0504A17UHUCAP, R801V0704A17UHUCAP, R801V0754A17UHNCAP, R801V0754A17UHSCAP, R801V0755A21UHNCAP, R801V0755A21UHSCAP, R801V1004A17UHNCAP, R801V1004A17UHSCAP, R801V1005A21UHNCAP, R801V1005A21UHSCAP, R801V1005A21UHUCAP, R801V1255A24UHNCAP, R801V1255A24UHSCAP, R801V1505A24UHNCAP, R801V1505A24UHSCAP
63-24108-01	Bolt, 5/16-18 x 1-1/4 in. (Grade 5)	1		R801V0503A14DZNCAP, R801V0503A14DZSCAP, R801V0754A17DZNCAP, R801V0754A17DZSCAP, R801V0755A21DZNCAP, R801V0755A21DZSCAP, R801V1005A21DZNCAP, R801V1005A21DZSCAP, R801V1255A24DZNCAP, R801V1255A24DZSCAP
AE-61874-01	Bottom - Solid	1		R801V0503A14UHNCAP, R801V0503A14UHSCAP
AE-61874-02	Bottom - Solid	1		R801V0504A17UHNCAP, R801V0504A17UHSCAP, R801V0504A17UHUCAP, R801V0704A17UHUCAP, R801V0754A17UHNCAP, R801V0754A17UHSCAP, R801V1004A17UHNCAP, R801V1004A17UHSCAP
AE-61874-03	Bottom - Solid	1		R801V0755A21UHNCAP, R801V0755A21UHSCAP, R801V1005A21UHNCAP, R801V1005A21UHSCAP, R801V1005A21UHUCAP
AE-61874-04	Bottom - Solid	1		R801V1255A24UHNCAP, R801V1255A24UHSCAP, R801V1505A24UHNCAP, R801V1505A24UHSCAP
AS-104968-01	Bottom Plate Assembly	1		R801V0503A14UHNCAP, R801V0503A14UHSCAP
AS-104968-02	Bottom Plate Assembly	1		R801V0504A17UHNCAP, R801V0504A17UHSCAP, R801V0504A17UHUCAP, R801V0704A17UHUCAP, R801V0754A17UHNCAP, R801V0754A17UHSCAP, R801V1004A17UHNCAP, R801V1004A17UHSCAP
AS-104968-03	Bottom Plate Assembly	1		R801V0755A21UHNCAP, R801V0755A21UHSCAP, R801V1005A21UHNCAP, R801V1005A21UHSCAP, R801V1005A21UHUCAP
AS-104968-04	Bottom Plate Assembly	1		R801V1255A24UHNCAP, R801V1255A24UHSCAP, R801V1505A24UHNCAP, R801V1505A24UHSCAP
10-105666-01	Bracket - Blower (Left)	1		R801V0504A17UHUCAP, R801V0704A17UHUCAP, R801V1005A21UHUCAP

Part No.	Description	Qty	Replaced By	Fits Models
10-105666-02	Bracket - Blower (Right)	1		R801V0504A17UHUCAP, R801V0704A17UHUCAP, R801V1005A21UHUCAP
AE-61588-02	Bracket - Burner	1		R801V0503A14DZNCAP, R801V0503A14DZSCAP, R801V0503A14UHNCAP, R801V0503A14UHSCAP, R801V0504A17UHNCAP, R801V0504A17UHSCAP, R801V0754A17DZNCAP, R801V0754A17DZSCAP, R801V0754A17UHNCAP, R801V0754A17UHSCAP, R801V0755A21DZNCAP, R801V0755A21DZSCAP, R801V0755A21UHNCAP, R801V0755A21UHSCAP, R801V1004A17UHNCAP, R801V1004A17UHSCAP, R801V1005A21DZNCAP, R801V1005A21DZSCAP, R801V1005A21UHNCAP, R801V1005A21UHSCAP, R801V1255A24DZNCAP, R801V1255A24DZSCAP, R801V1255A24UHNCAP, R801V1255A24UHSCAP, R801V1505A24UHNCAP, R801V1505A24UHSCAP
AE-67846-02	Bracket - Heat Exchanger	1		R801V0504A17UHNCAP, R801V0504A17UHSCAP, R801V0504A17UHUCAP, R801V0704A17UHUCAP, R801V0754A17DZNCAP, R801V0754A17DZSCAP, R801V0754A17UHNCAP, R801V0754A17UHSCAP, R801V0755A21DZNCAP, R801V0755A21DZSCAP, R801V0755A21UHNCAP, R801V0755A21UHSCAP, R801V1004A17UHNCAP, R801V1004A17UHSCAP, R801V1005A21DZNCAP, R801V1005A21DZSCAP, R801V1005A21UHNCAP, R801V1005A21UHSCAP, R801V1005A21UHUCAP, R801V1255A24DZNCAP, R801V1255A24DZSCAP, R801V1255A24UHNCAP, R801V1255A24UHSCAP, R801V1505A24UHNCAP, R801V1505A24UHSCAP
AE-102680-01	Bracket - Heat Exchanger (Left Side)	1		R801V0503A14DZNCAP, R801V0503A14DZSCAP, R801V0503A14UHNCAP, R801V0503A14UHSCAP
AE-102680-02	Bracket - Heat Exchanger (Right Side)	1		R801V0503A14DZNCAP, R801V0503A14DZSCAP, R801V0503A14UHNCAP, R801V0503A14UHSCAP
10-61956-01	Bracket - Motor Mount	1		R801V0503A14DZNCAP, R801V0503A14DZSCAP, R801V0754A17DZNCAP, R801V0754A17DZSCAP, R801V0755A21DZNCAP, R801V0755A21DZSCAP, R801V1005A21DZNCAP, R801V1005A21DZSCAP, R801V1255A24DZNCAP, R801V1255A24DZSCAP
10-106267-01	Bracket - Solenoid	1		R801V0504A17UHUCAP, R801V0704A17UHUCAP, R801V1005A21UHUCAP
AE-104332-01	Bracket Door Mounting	1		R801V0504A17UHNCAP, R801V0504A17UHSCAP, R801V0504A17UHUCAP, R801V0704A17UHUCAP, R801V0754A17UHNCAP, R801V0754A17UHSCAP, R801V1004A17UHNCAP, R801V1004A17UHSCAP
AE-104332-02	Bracket Door Mounting	1		R801V0755A21UHNCAP, R801V0755A21UHSCAP, R801V1005A21UHNCAP, R801V1005A21UHSCAP, R801V1005A21UHUCAP
AE-104332-03	Bracket Door Mounting	1		R801V1255A24UHNCAP, R801V1255A24UHSCAP, R801V1505A24UHNCAP, R801V1505A24UHSCAP
AE-104332-04	Bracket Door Mounting	1		R801V0503A14UHNCAP, R801V0503A14UHSCAP
81-105444-02	Brass - Female Pipe Tee 1/8 X 1/8 X 1/8	1		R801V0504A17UHUCAP, R801V0704A17UHUCAP, R801V1005A21UHUCAP
AE-104927-01	Burner Bottom Plate	1		R801V0503A14UHNCAP, R801V0503A14UHSCAP, R801V0504A17UHNCAP, R801V0504A17UHSCAP
AE-104927-02	Burner Bottom Plate	1		R801V0754A17UHNCAP, R801V0754A17UHSCAP, R801V0755A21UHNCAP, R801V0755A21UHSCAP
AE-104927-03	Burner Bottom Plate	1		R801V1004A17UHNCAP, R801V1004A17UHSCAP, R801V1005A21UHNCAP, R801V1005A21UHSCAP
AE-104927-04	Burner Bottom Plate	1		R801V1255A24UHNCAP, R801V1255A24UHSCAP
AE-104927-05	Burner Bottom Plate	1		R801V1505A24UHNCAP, R801V1505A24UHSCAP
AS-104042-11X	Burner Door/Label Kit	1		R801V0504A17UHNCAP, R801V0504A17UHSCAP, R801V0504A17UHUCAP, R801V0704A17UHUCAP, R801V0754A17UHNCAP, R801V0754A17UHSCAP, R801V1004A17UHNCAP, R801V1004A17UHSCAP
AS-104042-12X	Burner Door/Label Kit	1		R801V0755A21UHNCAP, R801V0755A21UHSCAP, R801V1005A21UHNCAP, R801V1005A21UHSCAP, R801V1005A21UHUCAP
AS-104042-13X	Burner Door/Label Kit	1		R801V1255A24UHNCAP, R801V1255A24UHSCAP, R801V1505A24UHNCAP, R801V1505A24UHSCAP
62-106977-05	Burner Orifice - NG	1		R801V0704A17UHUCAP

Part No.	Description	Qty	Replaced By	Fits Models
62-106977-06	Burner Orifice - NG	1		R801V0504A17UHUCAP
62-106977-09	Burner Orifice - NG	1		R801V1005A21UHUCAP
AE-60997-01	Burner Support	1		R801V0503A14DZNCAP, R801V0503A14DZSCAP, R801V0503A14UHNCAP, R801V0503A14UHSCAP, R801V0504A17UHNCAP, R801V0504A17UHSCAP
AE-60997-02	Burner Support	1		R801V0754A17DZNCAP, R801V0754A17DZSCAP, R801V0754A17UHNCAP, R801V0754A17UHSCAP, R801V0755A21DZNCAP, R801V0755A21DZSCAP, R801V0755A21UHNCAP, R801V0755A21UHSCAP
AE-60997-03	Burner Support	1		R801V1004A17UHNCAP, R801V1004A17UHSCAP, R801V1005A21DZNCAP, R801V1005A21DZSCAP, R801V1005A21UHNCAP, R801V1005A21UHSCAP
AE-60997-04	Burner Support	1		R801V1255A24DZNCAP, R801V1255A24DZSCAP, R801V1255A24UHNCAP, R801V1255A24UHSCAP
AE-60997-05	Burner Support	1		R801V1505A24UHNCAP, R801V1505A24UHSCAP
68-105396-01	Burner/ Combustion Chamber/ Venturi Assembly Gasket	1		R801V0504A17UHUCAP, R801V0704A17UHUCAP
68-105396-02	Burner/ Combustion Chamber/ Venturi Assembly Gasket	1		R801V1005A21UHUCAP
45-17055-13	Bushing - Strain Relief	1		All models
45-22980-10	Button Plug with Recessed Head	1		R801V0503A14DZNCAP, R801V0503A14DZSCAP, R801V0754A17DZNCAP, R801V0754A17DZSCAP, R801V0755A21DZNCAP, R801V0755A21DZSCAP, R801V1005A21DZNCAP, R801V1005A21DZSCAP, R801V1255A24DZNCAP, R801V1255A24DZSCAP
64-101148-09	Cable Tie - Double Loop, 11.8"	1		R801V0503A14DZNCAP, R801V0503A14DZSCAP, R801V0503A14UHNCAP, R801V0503A14UHSCAP, R801V0504A17UHNCAP, R801V0504A17UHSCAP, R801V0754A17DZNCAP, R801V0754A17DZSCAP, R801V0754A17UHNCAP, R801V0754A17UHSCAP, R801V0755A21DZNCAP, R801V0755A21DZSCAP, R801V0755A21UHNCAP, R801V0755A21UHSCAP, R801V1004A17UHNCAP, R801V1004A17UHSCAP, R801V1005A21DZNCAP, R801V1005A21DZSCAP, R801V1005A21UHNCAP, R801V1005A21UHSCAP, R801V1255A24DZNCAP, R801V1255A24DZSCAP, R801V1255A24UHNCAP, R801V1255A24UHSCAP, R801V1505A24UHNCAP, R801V1505A24UHSCAP
10-103105-04	Control Board Mounting Feet 80+	1		R801V0504A17UHUCAP, R801V0704A17UHUCAP, R801V1005A21UHUCAP
10-104878-05	Control Board Mounting Plate	1		R801V0504A17UHUCAP, R801V0704A17UHUCAP, R801V1005A21UHUCAP
AE-104878-02	Control Board Mounting Plate	1		R801V0503A14UHNCAP, R801V0503A14UHSCAP, R801V0504A17UHNCAP, R801V0504A17UHSCAP, R801V0754A17UHNCAP, R801V0754A17UHSCAP, R801V0755A21UHNCAP, R801V0755A21UHSCAP, R801V1004A17UHNCAP, R801V1004A17UHSCAP, R801V1005A21UHNCAP, R801V1005A21UHSCAP, R801V1255A24UHNCAP, R801V1255A24UHSCAP, R801V1505A24UHNCAP, R801V1505A24UHSCAP
AE-101080-02	Cover Plate - Burner	1		R801V0754A17UHSCAP, R801V0755A21UHSCAP
AE-101080-03	Cover Plate - Burner	1		R801V1004A17UHSCAP, R801V1005A21UHSCAP
AE-101080-04	Cover Plate - Burner	1		R801V1255A24UHSCAP
AE-101080-05	Cover Plate - Burner	1		R801V1505A24UHSCAP
AE-101080-06	Cover Plate - Burner	1		R801V0503A14UHSCAP, R801V0504A17UHSCAP
AE-101080-11	Cover Plate - Burner	1		R801V0503A14DZNCAP, R801V0503A14DZSCAP
AE-101080-12	Cover Plate - Burner	1		R801V0754A17DZNCAP, R801V0754A17DZSCAP, R801V0754A17UHNCAP, R801V0755A21DZNCAP, R801V0755A21DZSCAP, R801V0755A21UHNCAP
AE-101080-13	Cover Plate - Burner	1		R801V1004A17UHNCAP, R801V1005A21DZNCAP, R801V1005A21DZSCAP, R801V1005A21UHNCAP
AE-101080-14	Cover Plate - Burner	1		R801V1255A24DZNCAP, R801V1255A24DZSCAP, R801V1255A24UHNCAP
AE-101080-15	Cover Plate - Burner	1		R801V1505A24UHNCAP
AE-101080-16	Cover Plate - Burner	1		R801V0503A14UHNCAP, R801V0504A17UHNCAP
10-66980-01	Door Angle - 14 in.	1		R801V0503A14DZNCAP, R801V0503A14DZSCAP

Part No.	Description	Qty	Replaced By	Fits Models
10-66980-02	Door Angle - 17.5 in.	1		R801V0754A17DZNCAP, R801V0754A17DZSCAP
10-66980-03	Door Angle - 21 in.	1		R801V0755A21DZNCAP, R801V0755A21DZSCAP, R801V1005A21DZNCAP, R801V1005A21DZSCAP
10-66980-04	Door Angle - 24.5 in.	1		R801V1255A24DZNCAP, R801V1255A24DZSCAP
AS-104043-21	Door Assembly	1		R801V0504A17UHUCAP, R801V0704A17UHUCAP
AS-104043-22	Door Assembly	1		R801V1005A21UHUCAP
68-104374-34	Door Filler (Gray) - 14.0 in.	1		R801V0503A14UHNCAP, R801V0503A14UHSCAP
68-104374-31	Door Filler (Gray) - 17.5 in.	1		R801V0504A17UHNCAP, R801V0504A17UHSCAP, R801V0504A17UHUCAP, R801V0704A17UHUCAP, R801V0754A17UHNCAP, R801V0754A17UHSCAP, R801V1004A17UHNCAP, R801V1004A17UHSCAP
68-104374-32	Door Filler (Gray) - 21.0 in.	1		R801V0755A21UHNCAP, R801V0755A21UHSCAP, R801V1005A21UHNCAP, R801V1005A21UHSCAP, R801V1005A21UHUCAP
68-104374-33	Door Filler (Gray) - 24.5 in.	1		R801V1255A24UHNCAP, R801V1255A24UHSCAP, R801V1505A24UHNCAP, R801V1505A24UHSCAP
63-22159-01	Drill-Tip Sheet Metal Screw, 8-18 x 1/2 in.	1		R801V0503A14DZNCAP, R801V0503A14DZSCAP, R801V0754A17DZNCAP, R801V0754A17DZSCAP, R801V0755A21DZNCAP, R801V0755A21DZSCAP, R801V1005A21DZNCAP, R801V1005A21DZSCAP, R801V1255A24DZNCAP, R801V1255A24DZSCAP
AE-66999-06	Duct Flange Angle	1		R801VA050417MUA, R801VA070417MUA, R801VA100521MUA
AE-66999-08	Duct Flange Angle	1		R801VA050417MUA, R801VA070417MUA
10-66983-01	Enclosure Door	1		R801V0503A14DZNCAP, R801V0503A14DZSCAP, R801V0754A17DZNCAP, R801V0754A17DZSCAP, R801V0755A21DZNCAP, R801V0755A21DZSCAP, R801V1005A21DZNCAP, R801V1005A21DZSCAP, R801V1255A24DZNCAP, R801V1255A24DZSCAP
58-66691-14	Flue Pipe	1		R801V0503A14DZNCAP, R801V0503A14DZSCAP, R801V0754A17DZNCAP, R801V0754A17DZSCAP, R801V0755A21DZNCAP, R801V0755A21DZSCAP, R801V1005A21DZNCAP, R801V1005A21DZSCAP, R801V1255A24DZNCAP, R801V1255A24DZSCAP
10-66982-01	Flue Pipe/Enclosure Assembly	1		R801V0503A14DZNCAP, R801V0503A14DZSCAP, R801V0754A17DZNCAP, R801V0754A17DZSCAP, R801V0755A21DZNCAP, R801V0755A21DZSCAP, R801V1005A21DZNCAP, R801V1005A21DZSCAP, R801V1255A24DZNCAP, R801V1255A24DZSCAP
AS-100608-01	Flue Pipe/Enclosure Assembly	1		R801V0503A14DZNCAP, R801V0503A14DZSCAP, R801V0754A17DZNCAP, R801V0754A17DZSCAP, R801V0755A21DZNCAP, R801V0755A21DZSCAP, R801V1005A21DZNCAP, R801V1005A21DZSCAP, R801V1255A24DZNCAP, R801V1255A24DZSCAP
68-104413-01	Gasket - 25 ft.	2		R801V0503A14UHNCAP, R801V0503A14UHSCAP, R801V0504A17UHNCAP, R801V0504A17UHSCAP, R801V0504A17UHUCAP, R801V0704A17UHUCAP, R801V0754A17UHNCAP, R801V0754A17UHSCAP, R801V0755A21UHNCAP, R801V0755A21UHSCAP, R801V1004A17UHNCAP, R801V1004A17UHSCAP, R801V1005A21UHNCAP, R801V1005A21UHSCAP, R801V1005A21UHUCAP, R801V1255A24UHNCAP, R801V1255A24UHSCAP, R801V1505A24UHNCAP, R801V1505A24UHSCAP
68-104382-04	Gasket - Blower Shelf	1		R801V0503A14UHNCAP, R801V0503A14UHSCAP
68-104382-01	Gasket - Blower Shelf (17.5 in.)	1		R801V0504A17UHNCAP, R801V0504A17UHSCAP, R801V0504A17UHUCAP, R801V0704A17UHUCAP, R801V0754A17UHNCAP, R801V0754A17UHSCAP, R801V1004A17UHNCAP, R801V1004A17UHSCAP
68-104382-02	Gasket - Blower Shelf (21 in.)	1		R801V0755A21UHNCAP, R801V0755A21UHSCAP, R801V1005A21UHNCAP, R801V1005A21UHSCAP, R801V1005A21UHUCAP
68-104382-03	Gasket - Blower Shelf (24.5 in.)	1		R801V1255A24UHNCAP, R801V1255A24UHSCAP, R801V1505A24UHNCAP, R801V1505A24UHSCAP
AE-61951-53	Gasket - Door	1		R801V0503A14UHNCAP, R801V0503A14UHSCAP

Part No.	Description	Qty	Replaced By	Fits Models
AE-61951-54	Gasket - Door (17.5 in.)	1		R801V0504A17UHNCAP, R801V0504A17UHSCAP, R801V0504A17UHUCAP, R801V0704A17UHUCAP, R801V0754A17UHNCAP, R801V0754A17UHSCAP, R801V1004A17UHNCAP, R801V1004A17UHSCAP
AE-61951-55	Gasket - Door (21 in.)	1		R801V0755A21UHNCAP, R801V0755A21UHSCAP, R801V1005A21UHNCAP, R801V1005A21UHSCAP, R801V1005A21UHUCAP
AE-61951-56	Gasket - Door (24.5 in.)	1		R801V1255A24UHNCAP, R801V1255A24UHSCAP, R801V1505A24UHNCAP, R801V1505A24UHSCAP
68-22079-03	Gasket - Neoprene (1/16 in. x 3/4 in.)	1/2	OBSOLETE	R801V0503A14UHNCAP, R801V0503A14UHSCAP, R801V0504A17UHNCAP, R801V0504A17UHSCAP, R801V0504A17UHUCAP, R801V0704A17UHUCAP, R801V0754A17UHNCAP, R801V0754A17UHSCAP, R801V0755A21UHNCAP, R801V0755A21UHSCAP, R801V1004A17UHNCAP, R801V1004A17UHSCAP, R801V1005A21UHNCAP, R801V1005A21UHSCAP, R801V1005A21UHUCAP, R801V1255A24UHNCAP, R801V1255A24UHSCAP, R801V1505A24UHNCAP, R801V1505A24UHSCAP
68-22079-85	Gasket - Neoprene (1/8 in. x 3/4 in.) - 100 ft. Roll	1		All models
68-105341-01	Gasket Venturi Assembly	1		R801V0504A17UHUCAP, R801V0704A17UHUCAP, R801V1005A21UHUCAP
AE-61951-57	Gasket/Stripping - Angle Bracket	1		R801V0503A14UHNCAP, R801V0503A14UHSCAP
AE-61951-58	Gasket/Stripping - Angle Bracket	1		R801V0504A17UHNCAP, R801V0504A17UHSCAP, R801V0754A17UHNCAP, R801V0754A17UHSCAP, R801V1004A17UHNCAP, R801V1004A17UHSCAP
AE-61951-59	Gasket/Stripping - Angle Bracket	1		R801V0755A21UHNCAP, R801V0755A21UHSCAP, R801V1005A21UHNCAP, R801V1005A21UHSCAP
AE-61951-60	Gasket/Stripping - Angle Bracket	1		R801V1255A24UHNCAP, R801V1255A24UHSCAP, R801V1505A24UHNCAP, R801V1505A24UHSCAP
AE-61951-62	Gasket/Stripping - Angle Bracket	1		R801V0503A14UHNCAP, R801V0503A14UHSCAP, R801V0504A17UHNCAP, R801V0504A17UHSCAP, R801V0754A17UHNCAP, R801V0754A17UHSCAP, R801V0755A21UHNCAP, R801V0755A21UHSCAP, R801V1004A17UHNCAP, R801V1004A17UHSCAP, R801V1005A21UHNCAP, R801V1005A21UHSCAP, R801V1255A24UHNCAP, R801V1255A24UHSCAP, R801V1505A24UHNCAP, R801V1505A24UHSCAP
56-106981-01	Grommet, Venturi Housing	1		R801V0504A17UHUCAP, R801V0704A17UHUCAP, R801V1005A21UHUCAP
AE-67874-01	Hanger - NOx Insert	1		R801V0503A14DZNCAP, R801V0503A14UHNCAP, R801V0504A17UHNCAP, R801V0754A17DZNCAP, R801V0754A17UHNCAP, R801V0755A21DZNCAP, R801V0755A21UHNCAP, R801V1004A17UHNCAP, R801V1005A21DZNCAP, R801V1005A21UHNCAP, R801V1255A24DZNCAP, R801V1255A24UHNCAP, R801V1505A24UHNCAP
AS-106432-01	Heat Exchanger Assembly	1		R801V0504A17UHUCAP
AS-106432-02	Heat Exchanger Assembly	1		R801V0704A17UHUCAP
AS-106432-03	Heat Exchanger Assembly	1		R801V1005A21UHUCAP
63-17189-03	Hex Nut, 1/4-20, w/External Tooth Lock Washer	1		R801V0503A14UHNCAP, R801V0503A14UHSCAP, R801V0504A17UHNCAP, R801V0504A17UHSCAP, R801V0504A17UHUCAP, R801V0704A17UHUCAP, R801V0754A17UHNCAP, R801V0754A17UHSCAP, R801V0755A21UHNCAP, R801V0755A21UHSCAP, R801V1004A17UHNCAP, R801V1004A17UHSCAP, R801V1005A21UHNCAP, R801V1005A21UHSCAP, R801V1005A21UHUCAP, R801V1255A24UHNCAP, R801V1255A24UHSCAP, R801V1505A24UHNCAP, R801V1505A24UHSCAP
63-24110-01	Hex Nut, 5/16-18, w/Serrated Flange	1		R801V0503A14DZNCAP, R801V0503A14DZSCAP, R801V0754A17DZNCAP, R801V0754A17DZSCAP, R801V0755A21DZNCAP, R801V0755A21DZSCAP, R801V1005A21DZNCAP, R801V1005A21DZSCAP, R801V1255A24DZNCAP, R801V1255A24DZSCAP

Part No.	Description	Qty	Replaced By	Fits Models
AE-61885-02	Ignitor Bracket	1		R801V0503A14DZNCAP, R801V0503A14DZSCAP, R801V0503A14UHNCAP, R801V0503A14UHSCAP, R801V0504A17UHNCAP, R801V0504A17UHSCAP, R801V0754A17DZNCAP, R801V0754A17DZSCAP, R801V0754A17UHNCAP, R801V0754A17UHSCAP, R801V0755A21DZNCAP, R801V0755A21DZSCAP, R801V0755A21UHNCAP, R801V0755A21UHSCAP, R801V1004A17UHNCAP, R801V1004A17UHSCAP, R801V1005A21DZNCAP, R801V1005A21DZSCAP, R801V1005A21UHNCAP, R801V1005A21UHSCAP, R801V1255A24DZNCAP, R801V1255A24DZSCAP, R801V1255A24UHNCAP, R801V1255A24UHSCAP, R801V1505A24UHNCAP, R801V1505A24UHSCAP
68-105315-02	Ignitor Gasket	1		R801V0504A17UHUCAP, R801V0704A17UHUCAP, R801V1005A21UHUCAP
68-22994-01	Insulation	1	OBSOLETE	R801V0503A14DZNCAP, R801V0503A14DZSCAP, R801V0754A17DZNCAP, R801V0754A17DZSCAP, R801V0755A21DZNCAP, R801V0755A21DZSCAP, R801V1005A21DZNCAP, R801V1005A21DZSCAP, R801V1255A24DZNCAP, R801V1255A24DZSCAP
68-22994-02	Insulation	1	OBSOLETE	R801V0503A14DZNCAP, R801V0503A14DZSCAP, R801V0754A17DZNCAP, R801V0754A17DZSCAP, R801V0755A21DZNCAP, R801V0755A21DZSCAP, R801V1005A21DZNCAP, R801V1005A21DZSCAP, R801V1255A24DZNCAP, R801V1255A24DZSCAP
68-22996-02	Insulation	1		R801V0754A17DZNCAP, R801V0754A17DZSCAP
68-22996-03	Insulation	1		R801V0755A21DZNCAP, R801V0755A21DZSCAP, R801V1005A21DZNCAP, R801V1005A21DZSCAP
68-22996-04	Insulation	1		R801V0503A14DZNCAP, R801V0503A14DZSCAP, R801V0754A17DZNCAP, R801V0754A17DZSCAP, R801V0755A21DZNCAP, R801V0755A21DZSCAP, R801V1005A21DZNCAP, R801V1005A21DZSCAP, R801V1255A24DZNCAP, R801V1255A24DZSCAP
68-22995-05	Insulation - Fiberglass	1	OBSOLETE	R801V0503A14DZNCAP, R801V0503A14DZSCAP
68-22995-06	Insulation - Fiberglass	1	OBSOLETE	R801V0754A17DZNCAP, R801V0754A17DZSCAP
68-22995-07	Insulation - Fiberglass	1	OBSOLETE	R801V0755A21DZNCAP, R801V0755A21DZSCAP, R801V1005A21DZNCAP, R801V1005A21DZSCAP
68-22995-08	Insulation - Fiberglass	1	OBSOLETE	R801V1255A24DZNCAP, R801V1255A24DZSCAP
68-22996-01	Insulation - Fiberglass	1	OBSOLETE	R801V0503A14DZNCAP, R801V0503A14DZSCAP
68-104821-05	Insulation - Foil Back	1		R801V0503A14UHNCAP, R801V0503A14UHSCAP
68-104821-06	Insulation - Foil Back	1		R801V0504A17UHNCAP, R801V0504A17UHSCAP, R801V0754A17UHNCAP, R801V0754A17UHSCAP, R801V1004A17UHNCAP, R801V1004A17UHSCAP
68-104821-07	Insulation - Foil Back	1		R801V0755A21UHNCAP, R801V0755A21UHSCAP, R801V1005A21UHNCAP, R801V1005A21UHSCAP
68-104821-08	Insulation - Foil Back	1		R801V1255A24UHNCAP, R801V1255A24UHSCAP, R801V1505A24UHNCAP, R801V1505A24UHSCAP
68-105418-01	Insulation - Foil Back Wide Jacket - 17.5 in.	1		R801V0504A17UHUCAP, R801V0704A17UHUCAP
68-105418-02	Insulation - Foil Back Wide Jacket - 21 in.	1		R801V1005A21UHUCAP
68-103537-01	Insulation - Sound	1		R801V0504A17UHNCAP, R801V0504A17UHSCAP, R801V0504A17UHUCAP, R801V0704A17UHUCAP, R801V0754A17UHNCAP, R801V0754A17UHSCAP, R801V1004A17UHNCAP, R801V1004A17UHSCAP
68-103537-02	Insulation - Sound	1		R801V0755A21UHNCAP, R801V0755A21UHSCAP, R801V1005A21UHNCAP, R801V1005A21UHSCAP, R801V1005A21UHUCAP
68-103537-03	Insulation - Sound	1		R801V1255A24UHNCAP, R801V1255A24UHSCAP, R801V1505A24UHNCAP, R801V1505A24UHSCAP
68-103537-04	Insulation - Sound	1		R801V0503A14UHNCAP, R801V0503A14UHSCAP
AE-67925-01	Insulation Retainer	1		All models
10-61475-02	Junction Box	1		R801V0503A14DZNCAP, R801V0503A14DZSCAP, R801V0754A17DZNCAP, R801V0754A17DZSCAP, R801V0755A21DZNCAP, R801V0755A21DZSCAP, R801V1005A21DZNCAP, R801V1005A21DZSCAP, R801V1255A24DZNCAP, R801V1255A24DZSCAP

Part No.	Description	Qty	Replaced By	Fits Models
AE-61475-03	Junction Box	1		R801V0503A14UHNCAP, R801V0503A14UHSCAP, R801V0504A17UHNCAP, R801V0504A17UHSCAP, R801V0504A17UHUCAP, R801V0704A17UHUCAP, R801V0754A17UHNCAP, R801V0754A17UHSCAP, R801V0755A21UHNCAP, R801V0755A21UHSCAP, R801V1004A17UHNCAP, R801V1004A17UHSCAP, R801V1005A21UHNCAP, R801V1005A21UHSCAP, R801V1005A21UHUCAP, R801V1255A24UHNCAP, R801V1255A24UHSCAP, R801V1505A24UHNCAP, R801V1505A24UHSCAP
10-61476-02	Junction Box Cover	1		R801V0503A14DZNCAP, R801V0503A14DZSCAP, R801V0754A17DZNCAP, R801V0754A17DZSCAP, R801V0755A21DZNCAP, R801V0755A21DZSCAP, R801V1005A21DZNCAP, R801V1005A21DZSCAP, R801V1255A24DZNCAP, R801V1255A24DZSCAP
AE-61476-03	Juncton Box Cover	1		R801V0503A14UHNCAP, R801V0503A14UHSCAP, R801V0504A17UHNCAP, R801V0504A17UHSCAP, R801V0504A17UHUCAP, R801V0704A17UHUCAP, R801V0754A17UHNCAP, R801V0754A17UHSCAP, R801V0755A21UHNCAP, R801V0755A21UHSCAP, R801V1004A17UHNCAP, R801V1004A17UHSCAP, R801V1005A21UHNCAP, R801V1005A21UHSCAP, R801V1005A21UHUCAP, R801V1255A24UHNCAP, R801V1255A24UHSCAP, R801V1505A24UHNCAP, R801V1505A24UHSCAP
64-104352-01	Latch Cam	1		R801V0503A14UHNCAP, R801V0503A14UHSCAP, R801V0504A17UHNCAP, R801V0504A17UHSCAP, R801V0504A17UHUCAP, R801V0704A17UHUCAP, R801V0754A17UHNCAP, R801V0754A17UHSCAP, R801V0755A21UHNCAP, R801V0755A21UHSCAP, R801V1004A17UHNCAP, R801V1004A17UHSCAP, R801V1005A21UHNCAP, R801V1005A21UHSCAP, R801V1005A21UHUCAP, R801V1255A24UHNCAP, R801V1255A24UHSCAP, R801V1505A24UHNCAP, R801V1505A24UHSCAP
64-104351-03	Latch Handle/Stud (Gray)	1		R801V0503A14UHNCAP, R801V0503A14UHSCAP, R801V0504A17UHNCAP, R801V0504A17UHSCAP, R801V0504A17UHUCAP, R801V0704A17UHUCAP, R801V0754A17UHNCAP, R801V0754A17UHSCAP, R801V0755A21UHNCAP, R801V0755A21UHSCAP, R801V1004A17UHNCAP, R801V1004A17UHSCAP, R801V1005A21UHNCAP, R801V1005A21UHSCAP, R801V1005A21UHUCAP, R801V1255A24UHNCAP, R801V1255A24UHSCAP, R801V1505A24UHNCAP, R801V1505A24UHSCAP
AS-104043-14X	Lower Door - Panel/Panel Label Kit	1		R801V0503A14UHNCAP, R801V0503A14UHSCAP
63-101978-01	Machine Screw, 1/4-20 x 1 in.	1		R801V0503A14UHNCAP, R801V0503A14UHSCAP, R801V0504A17UHNCAP, R801V0504A17UHSCAP, R801V0504A17UHUCAP, R801V0704A17UHUCAP, R801V0754A17UHNCAP, R801V0754A17UHSCAP, R801V0755A21UHNCAP, R801V0755A21UHSCAP, R801V1004A17UHNCAP, R801V1004A17UHSCAP, R801V1005A21UHNCAP, R801V1005A21UHSCAP, R801V1005A21UHUCAP, R801V1255A24UHNCAP, R801V1255A24UHSCAP, R801V1505A24UHNCAP, R801V1505A24UHSCAP
81-102427-01	Manifold	1		R801V0503A14DZNCAP, R801V0503A14DZSCAP, R801V0503A14UHNCAP, R801V0503A14UHSCAP, R801V0504A17UHNCAP, R801V0504A17UHSCAP
81-102427-02	Manifold	1		R801V0754A17DZNCAP, R801V0754A17DZSCAP, R801V0754A17UHNCAP, R801V0754A17UHSCAP, R801V0755A21DZNCAP, R801V0755A21DZSCAP, R801V0755A21UHNCAP, R801V0755A21UHSCAP
81-102427-03	Manifold	1		R801V1004A17UHNCAP, R801V1004A17UHSCAP, R801V1005A21DZNCAP, R801V1005A21DZSCAP, R801V1005A21UHNCAP, R801V1005A21UHSCAP
81-102427-04	Manifold	1		R801V1255A24DZNCAP, R801V1255A24DZSCAP, R801V1255A24UHNCAP, R801V1255A24UHSCAP
81-102427-05	Manifold	1		R801V1505A24UHNCAP, R801V1505A24UHSCAP
81-105266-03	Manifold - Gas Injection ULN Premix 80+	1		R801V0504A17UHUCAP, R801V0704A17UHUCAP, R801V1005A21UHUCAP

Part No.	Description	Qty	Replaced By	Fits Models
AS-102433-01	Manifold/Orifice Assembly (2 Burner)	1		R801V0503A14DZNCAP, R801V0503A14DZSCAP, R801V0503A14UHNCAP, R801V0503A14UHSCAP, R801V0504A17UHNCAP, R801V0504A17UHSCAP
AS-102433-02	Manifold/Orifice Assembly (3 Burner)	1		R801V0754A17DZNCAP, R801V0754A17DZSCAP, R801V0754A17UHNCAP, R801V0754A17UHSCAP, R801V0755A21DZNCAP, R801V0755A21DZSCAP, R801V0755A21UHNCAP, R801V0755A21UHSCAP
56-24106-01	Motor Mounting Grommet - Collar (Round)	1		R801V0503A14DZNCAP, R801V0503A14DZSCAP, R801V0754A17DZNCAP, R801V0754A17DZSCAP, R801V0755A21DZNCAP, R801V0755A21DZSCAP, R801V1005A21DZNCAP, R801V1005A21DZSCAP, R801V1255A24DZNCAP, R801V1255A24DZSCAP
56-24107-01	Motor Mounting Grommet - Insert (Mushroom)	1		R801V0503A14DZNCAP, R801V0503A14DZSCAP, R801V0754A17DZNCAP, R801V0754A17DZSCAP, R801V0755A21DZNCAP, R801V0755A21DZSCAP, R801V1005A21DZNCAP, R801V1005A21DZSCAP, R801V1255A24DZNCAP, R801V1255A24DZSCAP
10-104878-04	Mounting Plate	1		R801VA050417MUA, R801VA070417MUA, R801VA100521MUA
10-67877-02	Mounting Plate	1		R801V0503A14DZNCAP, R801V0503A14DZSCAP, R801V0754A17DZNCAP, R801V0754A17DZSCAP, R801V0755A21DZNCAP, R801V0755A21DZSCAP, R801V1005A21DZNCAP, R801V1005A21DZSCAP, R801V1255A24DZNCAP, R801V1255A24DZSCAP
81-40709-03	Nipple - Black Pipe (1/8 in. x 2 in. long)	1		R801V0504A17UHUCAP, R801V0704A17UHUCAP, R801V1005A21UHUCAP
AE-67873-01	NOx Insert	1		R801V0503A14DZNCAP, R801V0503A14UHNCAP, R801V0504A17UHNCAP, R801V0754A17DZNCAP, R801V0754A17UHNCAP, R801V0755A21DZNCAP, R801V0755A21UHNCAP, R801V1004A17UHNCAP, R801V1005A21DZNCAP, R801V1005A21UHNCAP, R801V1255A24DZNCAP, R801V1255A24UHNCAP, R801V1505A24UHNCAP
AS-67875-01	NOx Insert Assembly	1		R801V0503A14DZNCAP, R801V0503A14UHNCAP, R801V0504A17UHNCAP, R801V0754A17DZNCAP, R801V0754A17UHNCAP, R801V0755A21DZNCAP, R801V0755A21UHNCAP, R801V1004A17UHNCAP, R801V1005A21DZNCAP, R801V1005A21UHNCAP, R801V1255A24DZNCAP, R801V1255A24UHNCAP, R801V1505A24UHNCAP
AE-67872-01	NOx Insert Retainer	1		R801V0503A14DZNCAP, R801V0503A14UHNCAP, R801V0504A17UHNCAP
AE-67872-02	NOx Insert Retainer	1		R801V0754A17DZNCAP, R801V0754A17UHNCAP, R801V0755A21DZNCAP, R801V0755A21UHNCAP
AE-67872-03	NOx Insert Retainer	1		R801V1004A17UHNCAP, R801V1005A21DZNCAP, R801V1005A21UHNCAP
AE-67872-04	NOx Insert Retainer	1		R801V1255A24DZNCAP, R801V1255A24UHNCAP
AE-67872-05	NOx Insert Retainer	1		R801V1505A24UHNCAP
AE-101704-11X	Panel/Label Kit	1		R801V0754A17DZNCAP, R801V0754A17DZSCAP
AE-101705-11X	Panel/Label Kit	1		R801V0755A21DZNCAP, R801V0755A21DZSCAP, R801V1005A21DZNCAP, R801V1005A21DZSCAP
AE-101706-11X	Panel/Label Kit	1		R801V1255A24DZNCAP, R801V1255A24DZSCAP
AS-101733-11X	Panel/Label Kit	1		R801V0503A14DZNCAP, R801V0503A14DZSCAP
AS-101734-11X	Panel/Label Kit	1		R801V0754A17DZNCAP, R801V0754A17DZSCAP
AS-101735-11X	Panel/Label Kit	1		R801V0755A21DZNCAP, R801V0755A21DZSCAP, R801V1005A21DZNCAP, R801V1005A21DZSCAP
AS-101736-11X	Panel/Label Kit	1		R801V1255A24DZNCAP, R801V1255A24DZSCAP
AS-104809-06X	Panel/Label Kit	1		R801V0755A21UHNCAP, R801V0755A21UHSCAP
AS-105092-01X	Panel/Label Kit	1		R801V0503A14DZNCAP, R801V0503A14DZSCAP
AS-105092-02X	Panel/Label Kit	1		R801V0754A17DZNCAP, R801V0754A17DZSCAP
AS-105092-03X	Panel/Label Kit	1		R801V0755A21DZNCAP, R801V0755A21DZSCAP, R801V1005A21DZNCAP, R801V1005A21DZSCAP
AS-105092-04X	Panel/Label Kit	1		R801V1255A24DZNCAP, R801V1255A24DZSCAP
68-105460-02	Refractory Inserts (2 in. Tubes)	1		R801V0504A17UHUCAP, R801V0704A17UHUCAP, R801V1005A21UHUCAP

Part No.	Description	Qty	Replaced By	Fits Models
63-105574-04	Screw	1		R801V0504A17UHUCAP, R801V0704A17UHUCAP, R801V1005A21UHUCAP
63-105574-05	Screw	1		R801V0504A17UHUCAP, R801V0704A17UHUCAP, R801V1005A21UHUCAP
63-20072-06	Screw	1		R801V0503A14DZNCAP, R801V0503A14DZSCAP, R801V0754A17DZNCAP, R801V0754A17DZSCAP, R801V0755A21DZNCAP, R801V0755A21DZSCAP, R801V1005A21DZNCAP, R801V1005A21DZSCAP, R801V1255A24DZNCAP, R801V1255A24DZSCAP
63-103934-02	Screw - Plastic Threading Hex Head (8-18 x .375)	1		R801V0503A14UHNCAP, R801V0503A14UHSCAP, R801V0504A17UHNCAP, R801V0504A17UHSCAP, R801V0504A17UHUCAP, R801V0704A17UHUCAP, R801V0754A17UHNCAP, R801V0754A17UHSCAP, R801V0755A21UHNCAP, R801V0755A21UHSCAP, R801V1004A17UHNCAP, R801V1004A17UHSCAP, R801V1005A21UHNCAP, R801V1005A21UHSCAP, R801V1005A21UHUCAP, R801V1255A24UHNCAP, R801V1255A24UHSCAP, R801V1505A24UHNCAP, R801V1505A24UHSCAP
63-105574-01	Screw - Sheet Metal - 8-32 x 1 in.	1		R801V0504A17UHUCAP, R801V0704A17UHUCAP, R801V1005A21UHUCAP
63-104523-01	Screw - Sheet Metal - 8-32 x 1/2 in.	1		R801V0504A17UHUCAP, R801V0704A17UHUCAP, R801V1005A21UHUCAP
63-104375-06	Screw - Sheet Metal - 8-32 x 5/16 in.	1		R801V0504A17UHUCAP, R801V0704A17UHUCAP, R801V1005A21UHUCAP
67-24036-01	Sealant	1		R801V0503A14UHNCAP, R801V0503A14UHSCAP, R801V0504A17UHNCAP, R801V0504A17UHSCAP, R801V0504A17UHUCAP, R801V0704A17UHUCAP, R801V0754A17DZNCAP, R801V0754A17DZSCAP, R801V0754A17UHNCAP, R801V0754A17UHSCAP, R801V0755A21DZNCAP, R801V0755A21DZSCAP, R801V0755A21UHNCAP, R801V0755A21UHSCAP, R801V1004A17UHNCAP, R801V1004A17UHSCAP, R801V1005A21DZNCAP, R801V1005A21DZSCAP, R801V1005A21UHNCAP, R801V1005A21UHSCAP, R801V1005A21UHUCAP, R801V1255A24DZNCAP, R801V1255A24DZSCAP, R801V1255A24UHNCAP, R801V1255A24UHSCAP, R801V1505A24UHNCAP, R801V1505A24UHSCAP
63-106762-01	Sheet Metal Screw - Jacket Trim Head Thread Point	2		R801V0503A14DZNCAP, R801V0503A14DZSCAP, R801V0503A14UHNCAP, R801V0503A14UHSCAP, R801V0504A17UHSCAP, R801V0504A17UHUCAP, R801V0704A17UHUCAP, R801V0754A17DZNCAP, R801V0754A17DZSCAP, R801V0754A17UHNCAP, R801V0754A17UHSCAP, R801V0755A21DZNCAP, R801V0755A21DZSCAP, R801V0755A21UHNCAP, R801V0755A21UHSCAP, R801V1004A17UHNCAP, R801V1004A17UHSCAP, R801V1005A21DZNCAP, R801V1005A21DZSCAP, R801V1005A21UHNCAP, R801V1005A21UHSCAP, R801V1005A21UHUCAP, R801V1255A24DZNCAP, R801V1255A24DZSCAP, R801V1255A24UHNCAP, R801V1255A24UHSCAP, R801V1505A24UHNCAP, R801V1505A24UHSCAP
63-22426-01	Sheet Metal Screw w/External Tooth Lock Washer, 10-16 x 1/2 in.	1		R801V1255A24DZNCAP, R801V1255A24DZSCAP
63-22338-02	Sheet Metal Screw, 6-20 x 1/4 in.	1		R801V0754A17DZNCAP, R801V0754A17DZSCAP, R801V0755A21DZNCAP, R801V0755A21DZSCAP, R801V1005A21DZNCAP, R801V1005A21DZSCAP, R801V1255A24DZNCAP, R801V1255A24DZSCAP
63-22153-05	Sheet Metal Screw, 8-18 x 3/8 in.	1/2		All models
63-24368-03	Sheet Metal Screw, 8-18 x 1/2 in.	1		R801V0504A17UHUCAP, R801V0704A17UHUCAP, R801V1005A21UHUCAP
63-24368-01	Sheet Metal Screw, 8-18 x 1/4 in.	1/2		All models
AS-104923-01	Side Angle Assembly - Left	1		R801V0503A14UHNCAP, R801V0503A14UHSCAP, R801V0504A17UHNCAP, R801V0504A17UHSCAP, R801V0754A17UHNCAP, R801V0754A17UHSCAP, R801V0755A21UHNCAP, R801V0755A21UHSCAP, R801V1004A17UHNCAP, R801V1004A17UHSCAP, R801V1005A21UHNCAP, R801V1005A21UHSCAP, R801V1255A24UHNCAP, R801V1255A24UHSCAP, R801V1505A24UHNCAP, R801V1505A24UHSCAP

Part No.	Description	Qty	Replaced By	Fits Models
AS-104923-03	Side Angle Assembly - Left	1		R801V0504A17UHUCAP, R801V0704A17UHUCAP, R801V1005A21UHUCAP
AS-104923-02	Side Angle Assembly - Right	1		R801V0503A14UHNCAP, R801V0503A14UHSCAP, R801V0504A17UHNCAP, R801V0504A17UHSCAP, R801V0754A17UHNCAP, R801V0754A17UHSCAP, R801V0755A21UHNCAP, R801V0755A21UHSCAP, R801V1004A17UHNCAP, R801V1004A17UHSCAP, R801V1005A21UHNCAP, R801V1005A21UHSCAP, R801V1255A24UHNCAP, R801V1255A24UHSCAP, R801V1505A24UHNCAP, R801V1505A24UHSCAP
AS-104923-04	Side Angle Assembly - Right	1		R801V0504A17UHUCAP, R801V0704A17UHUCAP, R801V1005A21UHUCAP
AE-101900-02	Side Baffle - Left	1		R801V0504A17UHNCAP, R801V0504A17UHSCAP, R801V0504A17UHUCAP
AE-101900-01	Side Baffle - Right	1		R801V0504A17UHNCAP, R801V0504A17UHSCAP, R801V0504A17UHUCAP
68-21893-03	Sight Glass	1		R801V0503A14DZNCAP, R801V0503A14DZSCAP, R801V0754A17DZNCAP, R801V0754A17DZSCAP, R801V0755A21DZNCAP, R801V0755A21DZSCAP, R801V1005A21DZNCAP, R801V1005A21DZSCAP, R801V1255A24DZNCAP, R801V1255A24DZSCAP
68-21893-04	Sight Glass	1		R801V0503A14UHNCAP, R801V0503A14UHSCAP, R801V0504A17UHNCAP, R801V0504A17UHSCAP, R801V0504A17UHUCAP, R801V0704A17UHUCAP, R801V0754A17UHNCAP, R801V0754A17UHSCAP, R801V0755A21UHNCAP, R801V0755A21UHSCAP, R801V1004A17UHNCAP, R801V1004A17UHSCAP, R801V1005A21UHNCAP, R801V1005A21UHSCAP, R801V1005A21UHUCAP, R801V1255A24UHNCAP, R801V1255A24UHSCAP, R801V1505A24UHNCAP, R801V1505A24UHSCAP
79-21491-83	Silicone Rubber Tubing (18 in. long)	1		R801V0503A14DZNCAP, R801V0503A14DZSCAP, R801V0503A14UHNCAP, R801V0503A14UHSCAP, R801V0504A17UHNCAP, R801V0504A17UHSCAP, R801V0754A17DZNCAP, R801V0754A17DZSCAP, R801V0754A17UHNCAP, R801V0754A17UHSCAP, R801V0755A21DZNCAP, R801V0755A21DZSCAP, R801V0755A21UHNCAP, R801V0755A21UHSCAP, R801V1004A17UHNCAP, R801V1004A17UHSCAP, R801V1005A21DZNCAP, R801V1005A21DZSCAP, R801V1005A21UHNCAP, R801V1005A21UHSCAP, R801V1255A24DZNCAP, R801V1255A24DZSCAP, R801V1255A24UHNCAP, R801V1255A24UHSCAP, R801V1505A24UHNCAP, R801V1505A24UHSCAP
79-21491-03	Silicone Rubber Tubing (Bulk - Non-Salable)	1		All models
45-18515-01	Snap-In Bushing - Conductor Protection	1		All models
62-105218-02	Spark Electrode	1		R801V0504A17UHUCAP, R801V0704A17UHUCAP, R801V1005A21UHUCAP
63-40304-04	Square Nut, 5/16-18	1		R801V0503A14DZNCAP, R801V0503A14DZSCAP, R801V0754A17DZNCAP, R801V0754A17DZSCAP, R801V0755A21DZNCAP, R801V0755A21DZSCAP, R801V1005A21DZNCAP, R801V1005A21DZSCAP, R801V1255A24DZNCAP, R801V1255A24DZSCAP
63-22429-01	Stainless Steel Sheet Metal Screw, 8-18 x 1/2 in.	1/2/3		All models
AE-61951-51	Stripping - Cut Length	1		R801V0503A14UHNCAP, R801V0503A14UHSCAP, R801V0504A17UHNCAP, R801V0504A17UHSCAP, R801V0504A17UHUCAP, R801V0704A17UHUCAP, R801V0754A17UHNCAP, R801V0754A17UHSCAP, R801V0755A21UHNCAP, R801V0755A21UHSCAP, R801V1004A17UHNCAP, R801V1004A17UHSCAP, R801V1005A21UHNCAP, R801V1005A21UHSCAP, R801V1005A21UHUCAP, R801V1255A24UHNCAP, R801V1255A24UHSCAP, R801V1505A24UHNCAP, R801V1505A24UHSCAP
42-22692-12	Switch - Push Button	1		R801V0503A14DZNCAP, R801V0503A14DZSCAP

Part No.	Description	Qty	Replaced By	Fits Models
42-22692-13	Switch - Push Button	1		R801V0503A14UHNCAP, R801V0503A14UHSCAP, R801V0504A17UHNCAP, R801V0504A17UHSCAP, R801V0504A17UHUCAP, R801V0704A17UHUCAP, R801V0754A17UHNCAP, R801V0754A17UHSCAP, R801V0755A21UHNCAP, R801V0755A21UHSCAP, R801V1004A17UHNCAP, R801V1004A17UHSCAP, R801V1005A21UHNCAP, R801V1005A21UHSCAP, R801V1005A21UHUCAP, R801V1255A24UHNCAP, R801V1255A24UHSCAP, R801V1505A24UHNCAP, R801V1505A24UHSCAP
10-66981-09	Top Plate	1		R801V0503A14DZNCAP, R801V0503A14DZSCAP
10-66981-10	Top Plate	1		R801V0754A17DZNCAP, R801V0754A17DZSCAP
10-66981-11	Top Plate	1		R801V0755A21DZNCAP, R801V0755A21DZSCAP, R801V1005A21DZNCAP, R801V1005A21DZSCAP
10-66981-12	Top Plate	1		R801V1255A24DZNCAP, R801V1255A24DZSCAP
AE-105366-01	Top Plate	1		R801V0504A17UHUCAP, R801V0704A17UHUCAP
AE-105366-02	Top Plate	1		R801V1005A21UHUCAP
AS-104767-01	Top Plate Assembly	1		R801V0503A14UHNCAP, R801V0503A14UHSCAP
AS-104767-02	Top Plate Assembly	1		R801V0504A17UHNCAP, R801V0504A17UHSCAP, R801V0754A17UHNCAP, R801V0754A17UHSCAP, R801V1004A17UHNCAP, R801V1004A17UHSCAP
AS-104767-03	Top Plate Assembly	1		R801V0755A21UHNCAP, R801V0755A21UHSCAP, R801V1005A21UHNCAP, R801V1005A21UHSCAP
AS-104767-04	Top Plate Assembly	1		R801V1255A24UHNCAP, R801V1255A24UHSCAP, R801V1505A24UHNCAP, R801V1505A24UHSCAP
AS-104042-14X	Upper Door - Panel/Panel Label Kit	1		R801V0503A14UHNCAP, R801V0503A14UHSCAP
54-106319-01	Venturi - Filter	1		R801V0504A17UHUCAP, R801V0704A17UHUCAP, R801V1005A21UHUCAP
AS-105509-11	Venturi Assembly	1		R801V0504A17UHUCAP
AS-105509-12	Venturi Assembly	1		R801V0704A17UHUCAP
AS-105509-13	Venturi Assembly	1		R801V1005A21UHUCAP
68-106320-02	Venturi Housing Cover	1		R801V0504A17UHUCAP, R801V0704A17UHUCAP, R801V1005A21UHUCAP
68-105507-01	Venturi Housing Ultra Low Nox	1		R801V0504A17UHUCAP, R801V0704A17UHUCAP, R801V1005A21UHUCAP
68-105508-01	Venturi Insert Choke DIA .670	1		R801V0504A17UHUCAP
68-105508-02	Venturi Insert Choke DIA .800	1		R801V0704A17UHUCAP
68-105508-03	Venturi Insert Choke DIA .900	1		R801V1005A21UHUCAP
63-26198-02	Washer - Flat (Fender)	1		R801V0503A14UHNCAP, R801V0503A14UHSCAP, R801V0504A17UHNCAP, R801V0504A17UHSCAP, R801V0504A17UHUCAP, R801V0704A17UHUCAP, R801V0754A17UHNCAP, R801V0754A17UHSCAP, R801V0755A21UHNCAP, R801V0755A21UHSCAP, R801V1004A17UHNCAP, R801V1004A17UHSCAP, R801V1005A21UHNCAP, R801V1005A21UHSCAP, R801V1005A21UHUCAP, R801V1255A24UHNCAP, R801V1255A24UHSCAP, R801V1505A24UHNCAP, R801V1505A24UHSCAP
64-17606-01	Wire & Cable Tie - Nylon Black - 8 in.	1		All models