Rheem R802V Gas Furnace Replacement Parts List

Parts list RP-RHM-R802V | Updated Nov 2026 | 381 parts | 44 model numbers

Genuine Rheem OEM part numbers for the models listed below, compiled from Rheem Manufacturing's service parts catalog. Quantities are per unit. Where Rheem has replaced a part number, the current number is shown under Replaced By. Always confirm the full model and serial number of the unit before ordering.

Models covered

R802V0503A14DZNCAP, R802V0503A14DZSCAP, R802V0503A14UHNCAP, R802V0503A14UHSCAP, R802V0504A17UHNCAP, R802V0504A17UHSCAP, R802V0754A17DZNCAP, R802V0754A17DZSCAP, R802V0754A17UHNCAP, R802V0754A17UHSCAP, R802V0755A21DZNCAP, R802V0755A21DZSCAP, R802V0755A21UHNCAP, R802V0755A21UHSCAP, R802V1004A17UHNCAP, R802V1004A17UHSCAP, R802V1005A21DZNCAP, R802V1005A21DZSCAP, R802V1005A21UHNCAP, R802V1005A21UHSCAP, R802V1255A24DZNCAP, R802V1255A24DZSCAP, R802V1255A24UHNCAP, R802V1255A24UHSCAP, R802V1505A24UHNCAP, R802V1505A24UHSCAP, R802VA050317MSA, R802VA050317MXA, R802VA075317MSA, R802VA075317MXA, R802VA075317ZSB, R802VA075317ZXB, R802VA075421MSA, R802VA075421MXA, R802VA075421ZSB, R802VA075421ZXB, R802VA100521MSA, R802VA100521MXA, R802VA100521ZSB, R802VA100521ZXB, R802VA125524MSA, R802VA125524MXA, R802VA125524ZSB, R802VA125524ZXB

R802V parts breakdown: Exploded View

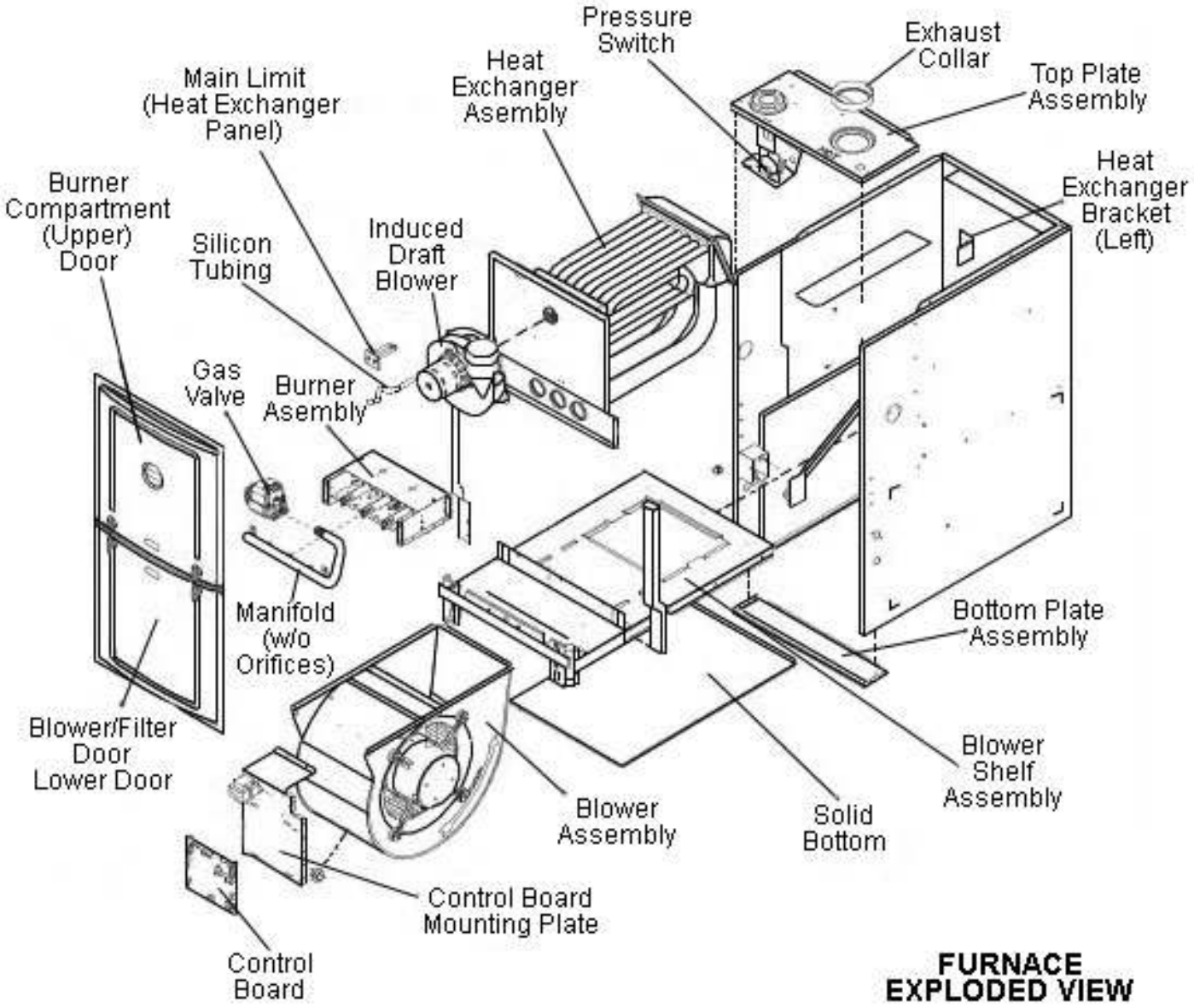

R802V parts breakdown: Exploded View

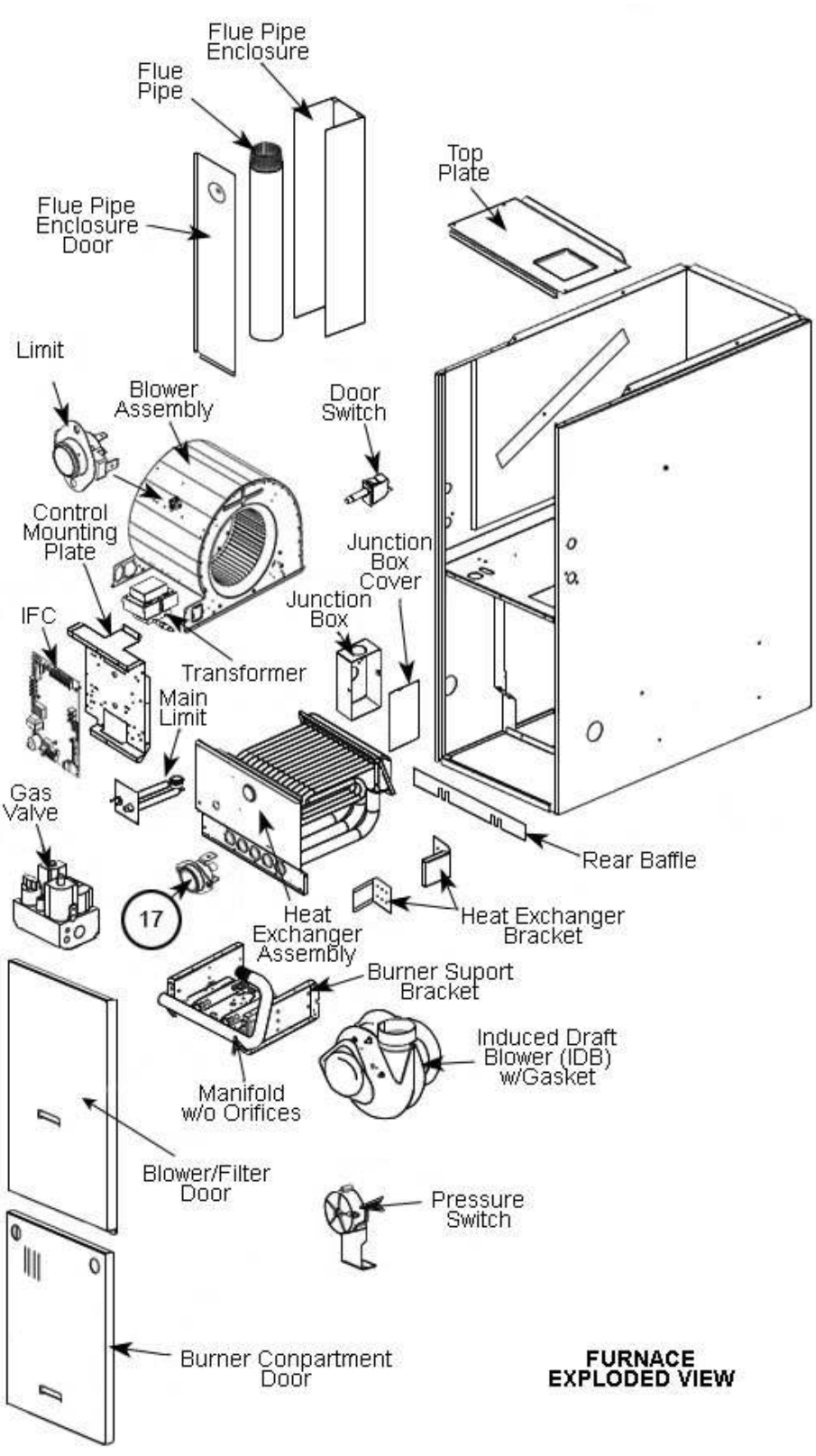

R802V parts breakdown: Exploded View

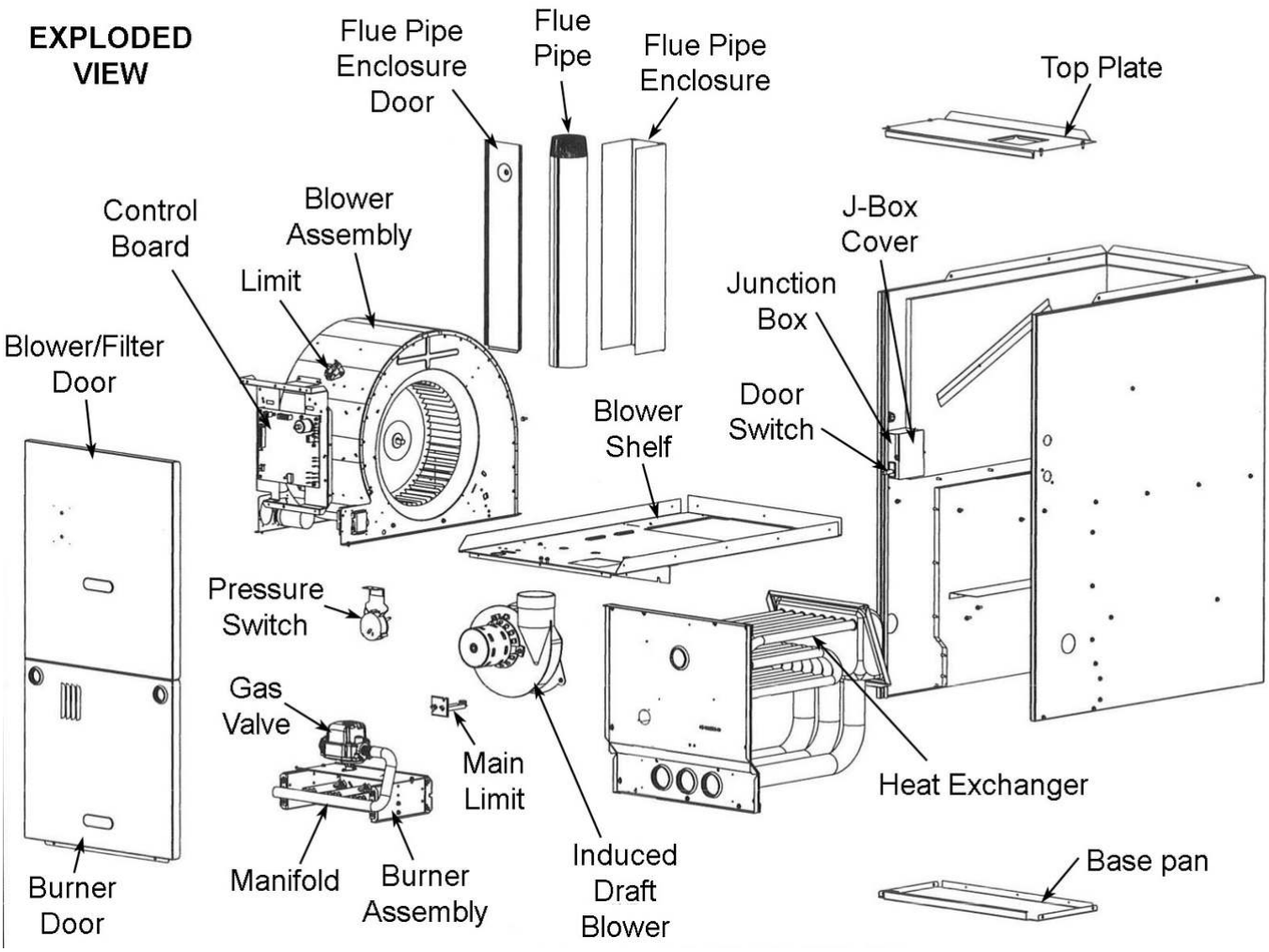

R802V parts breakdown: Junction Box

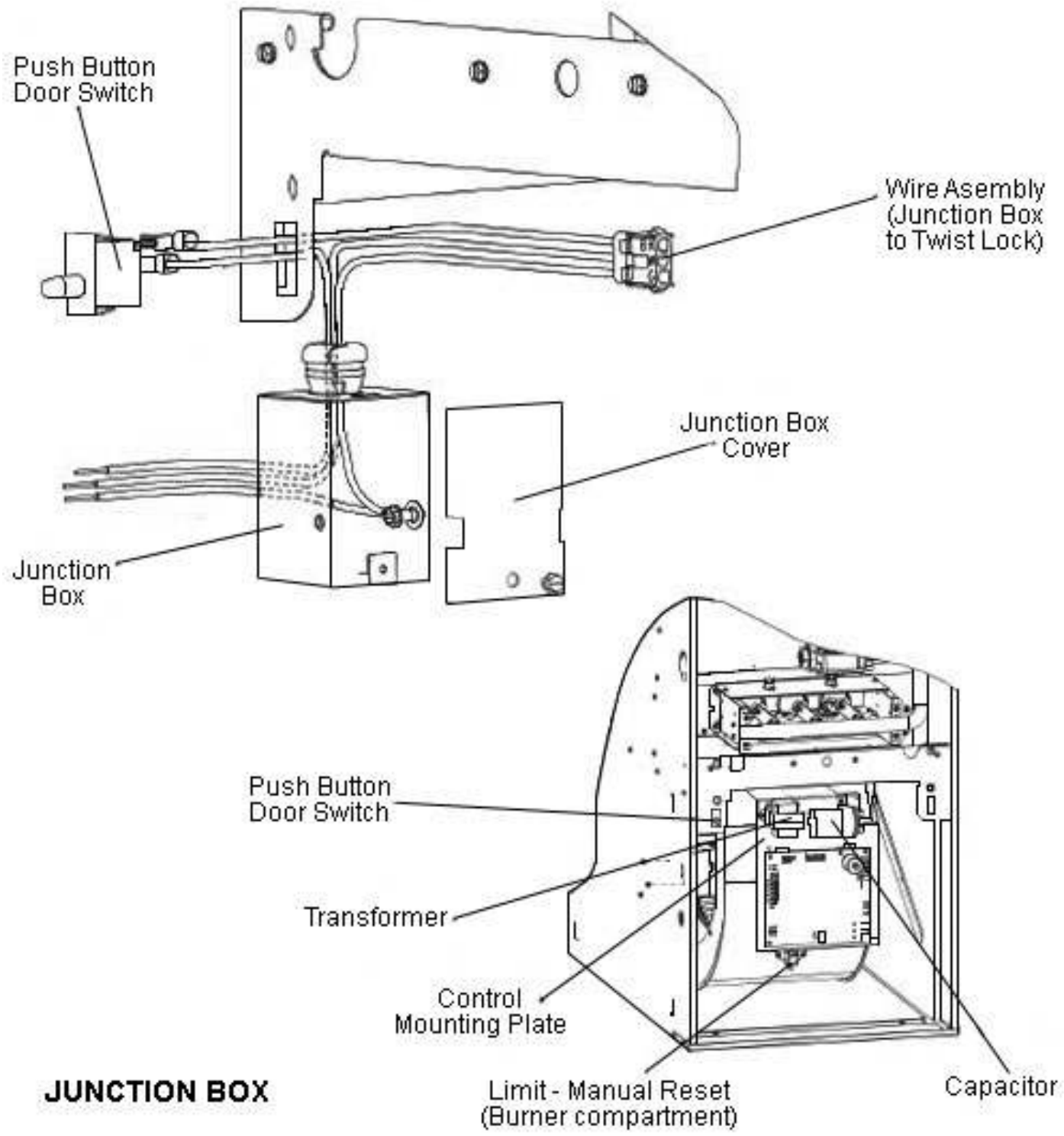

R802V parts breakdown: Blower Assembly

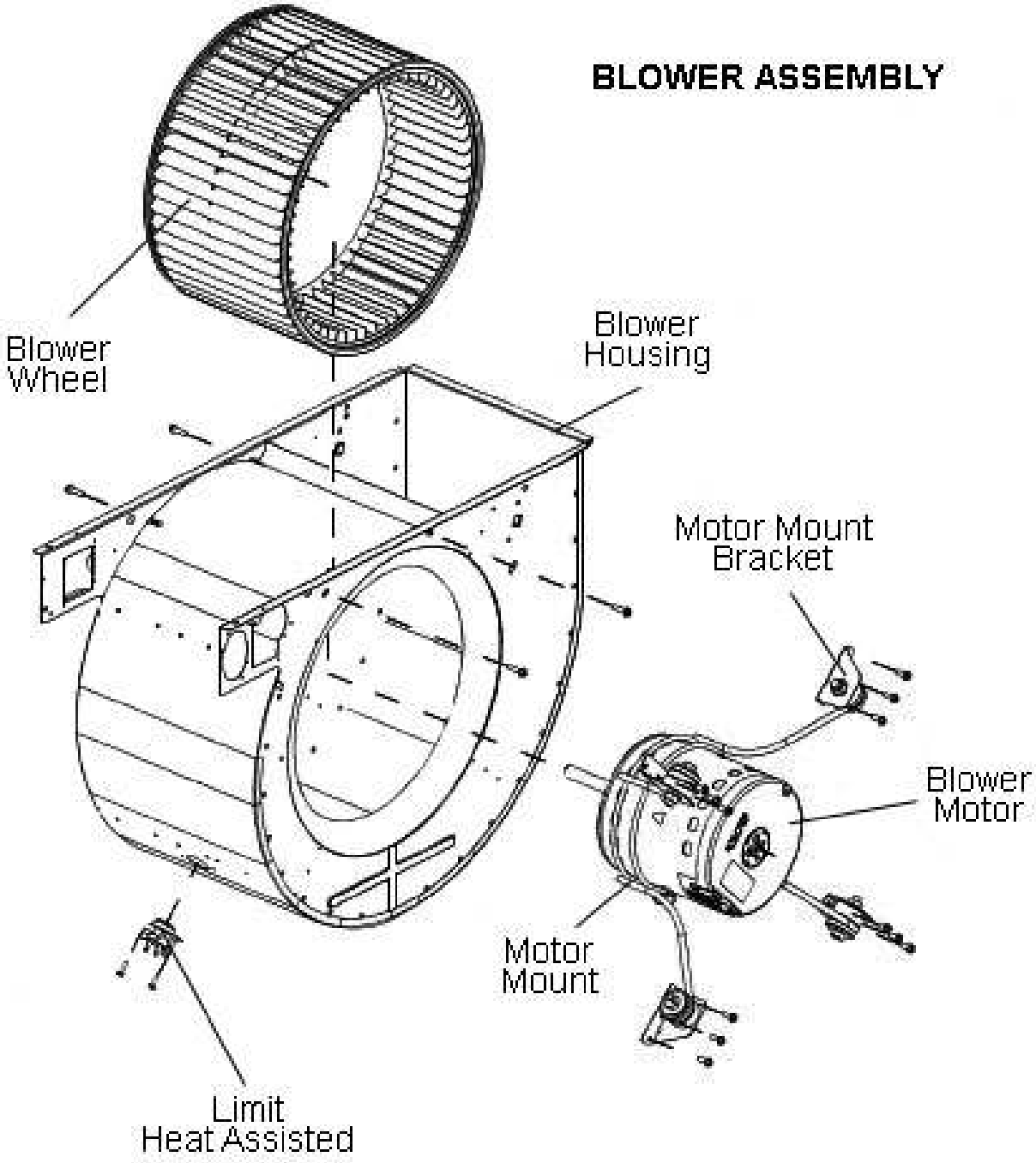

R802V parts breakdown: Blower Assembly

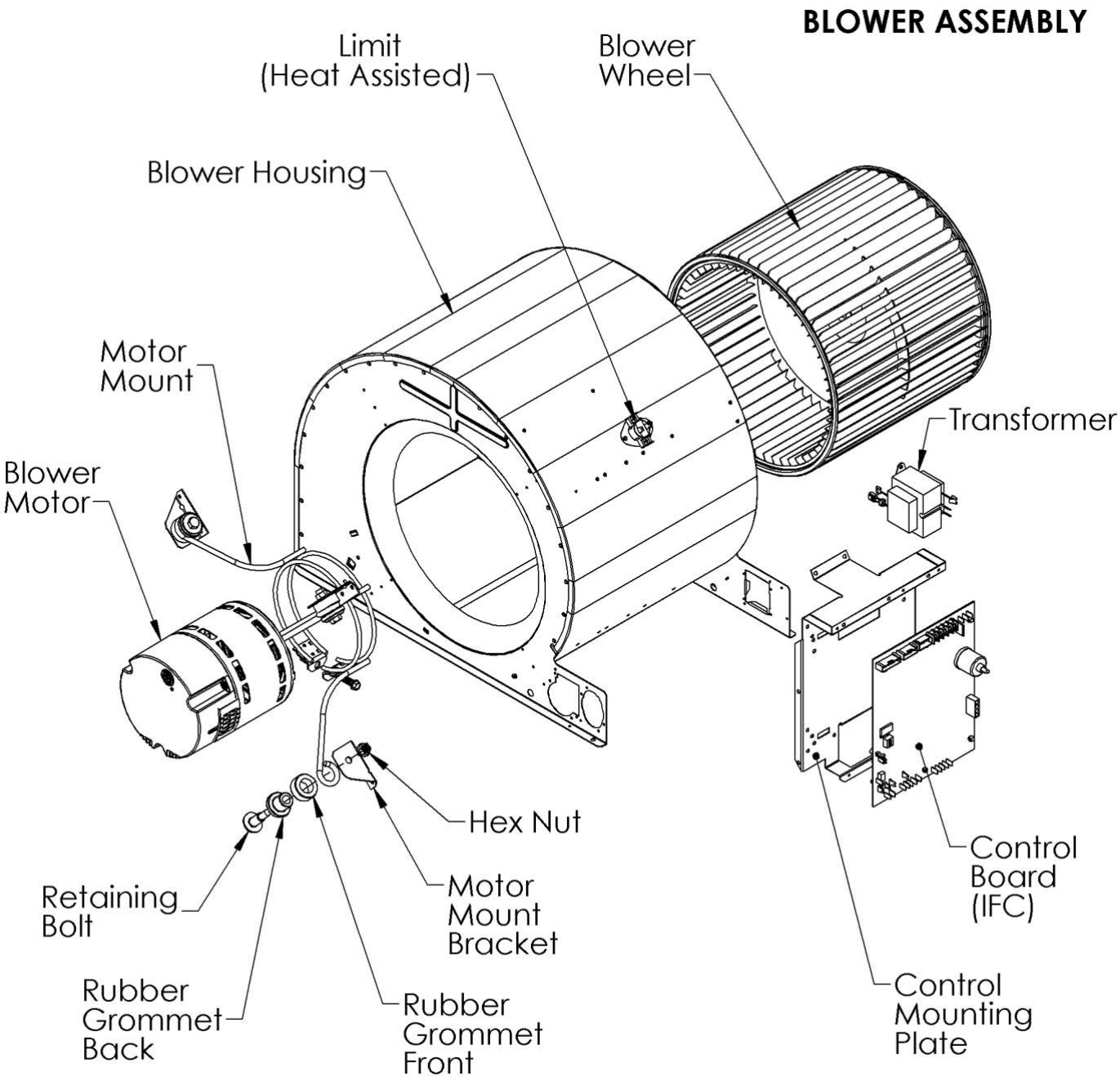

R802V parts breakdown: Blower Assembly

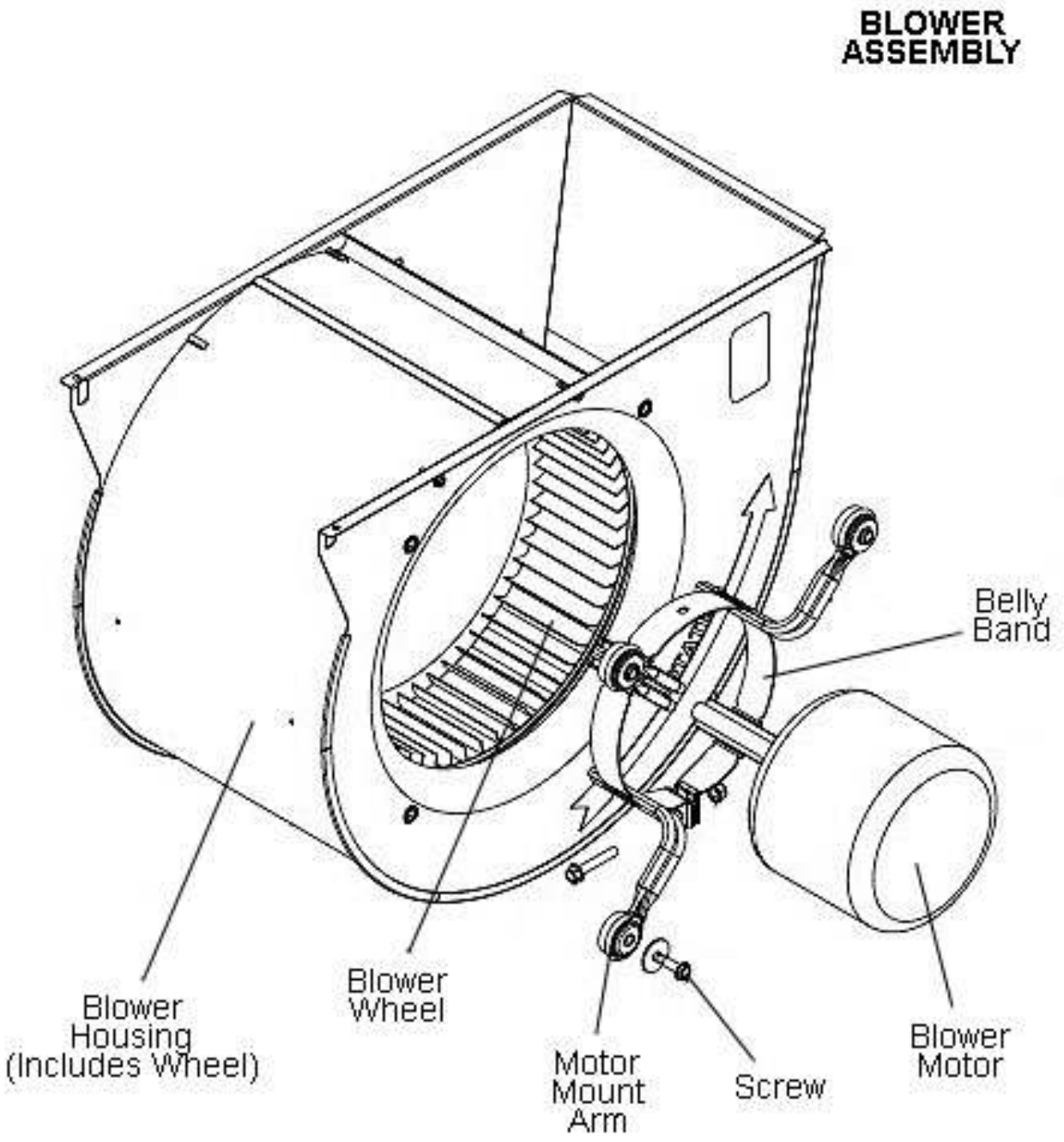

R802V parts breakdown: Motor Bracket Assembly

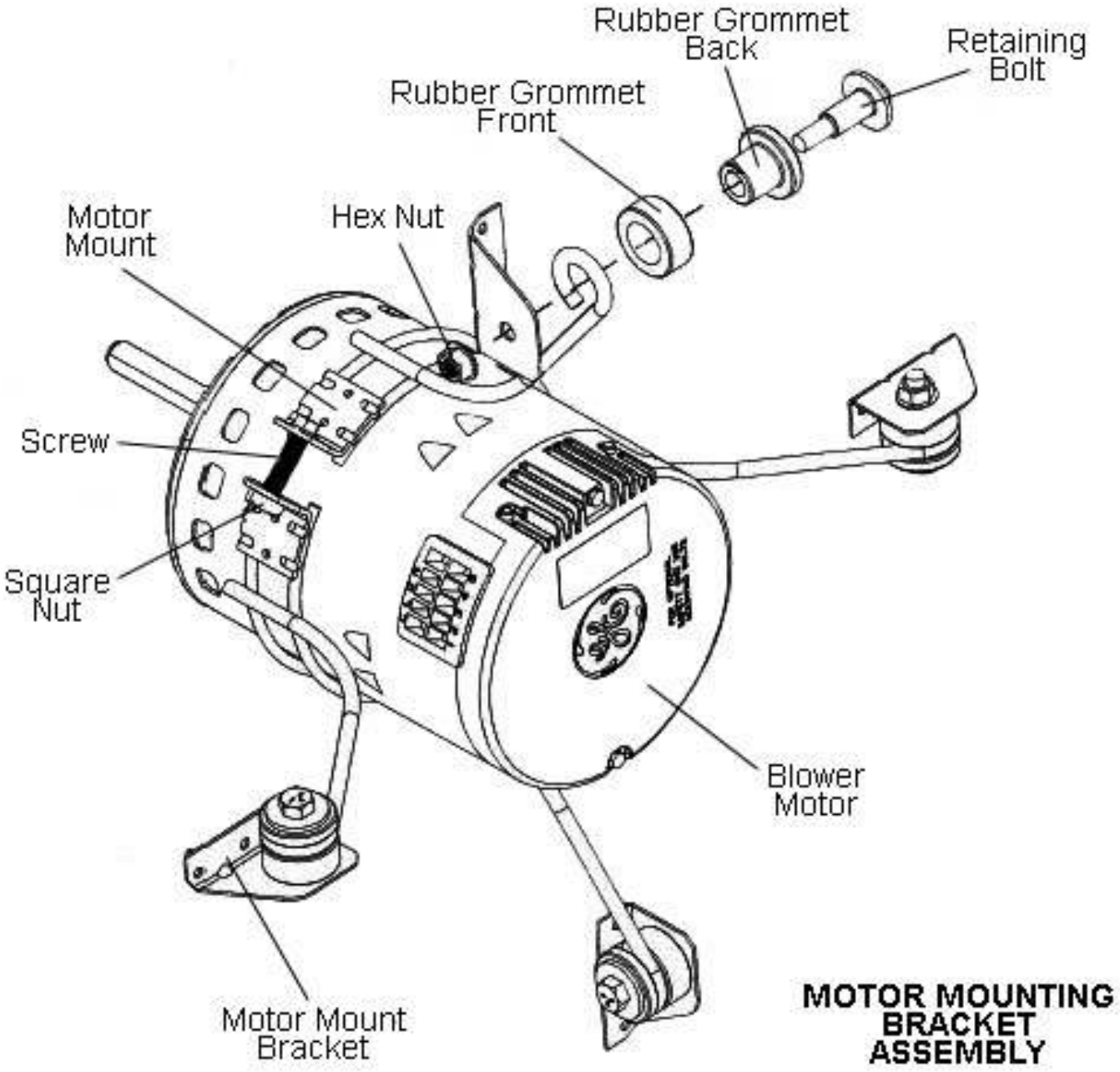

R802V parts breakdown: Burner Assembly

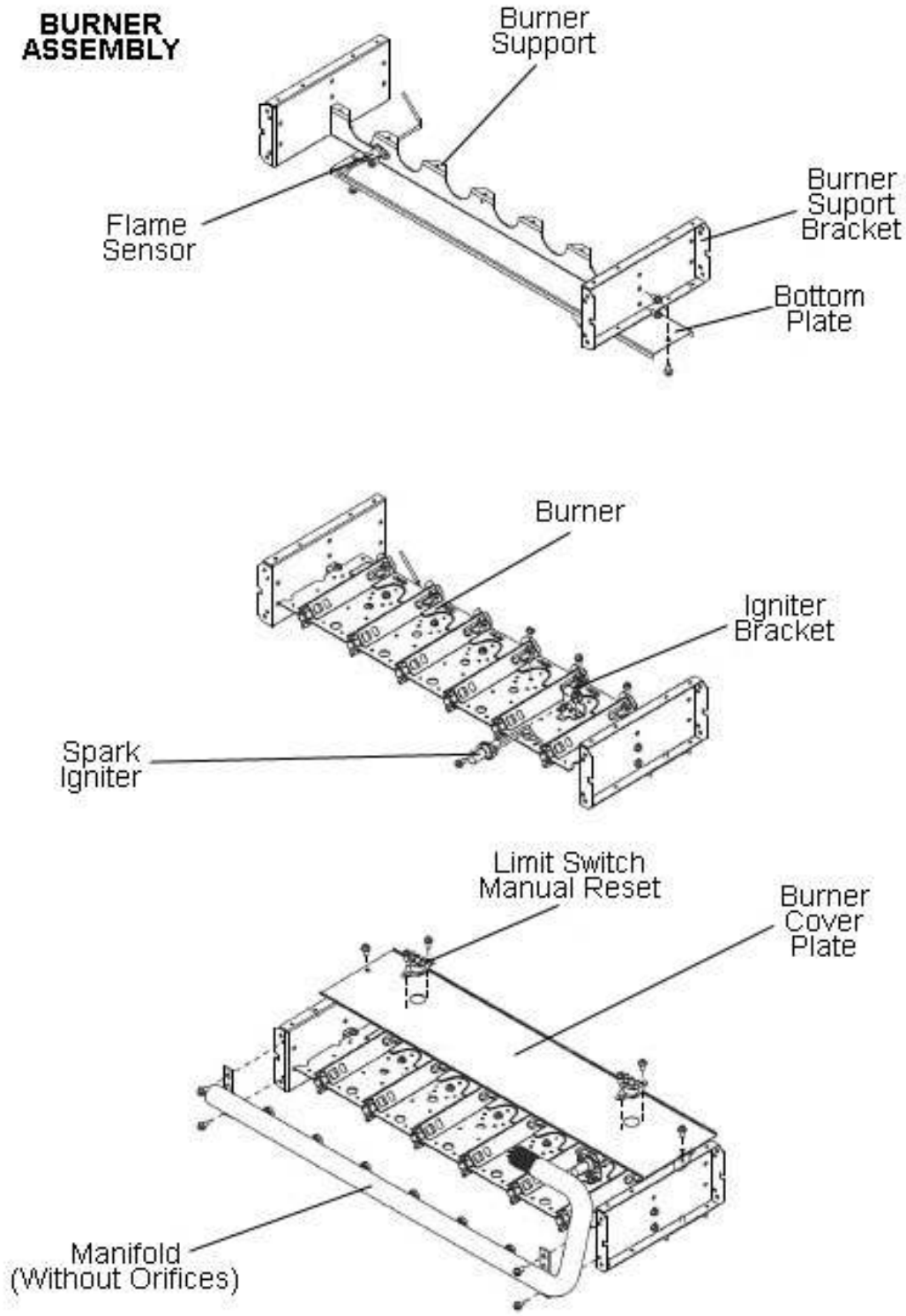

R802V parts breakdown: Burner Assembly

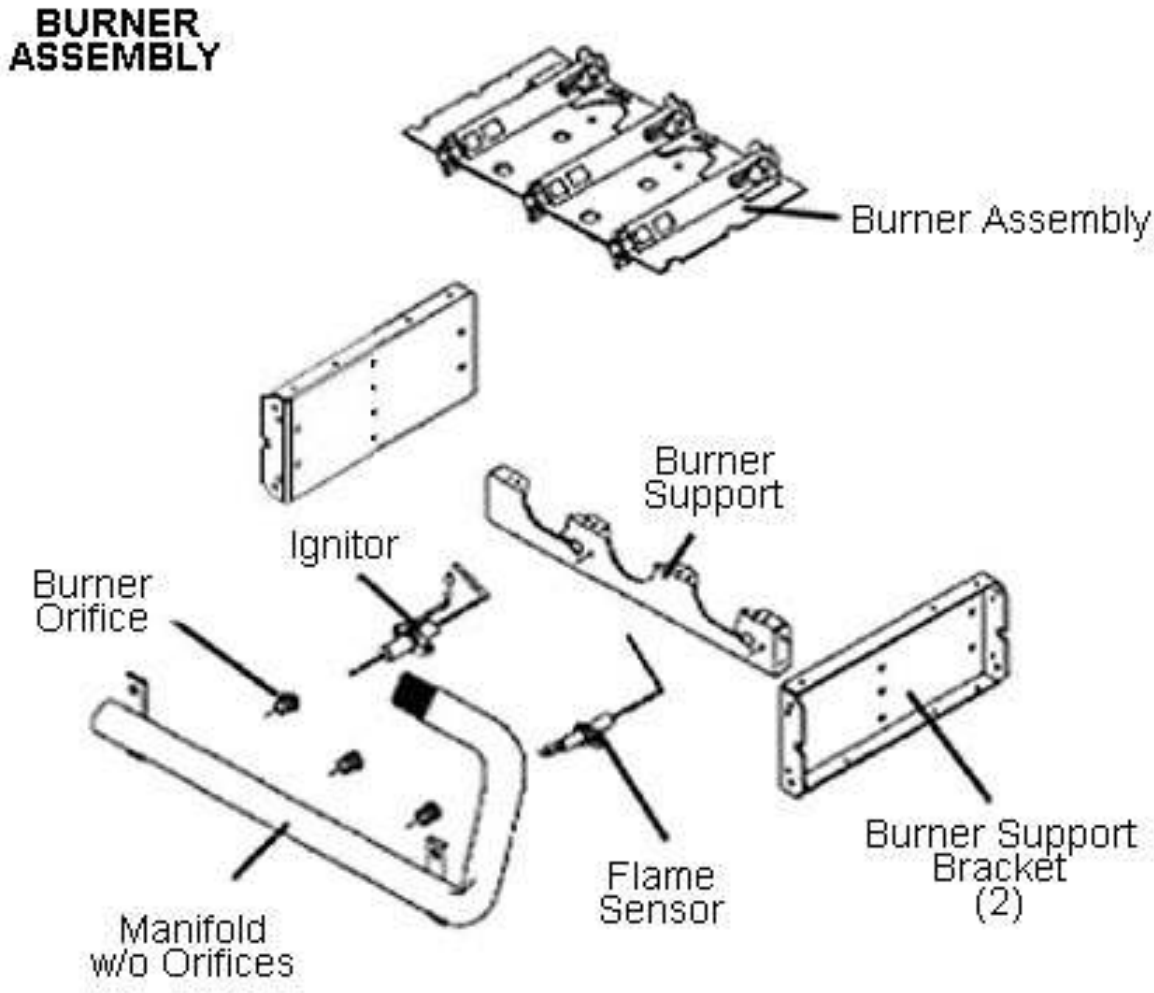

R802V parts breakdown: Blower - Mounting Plate

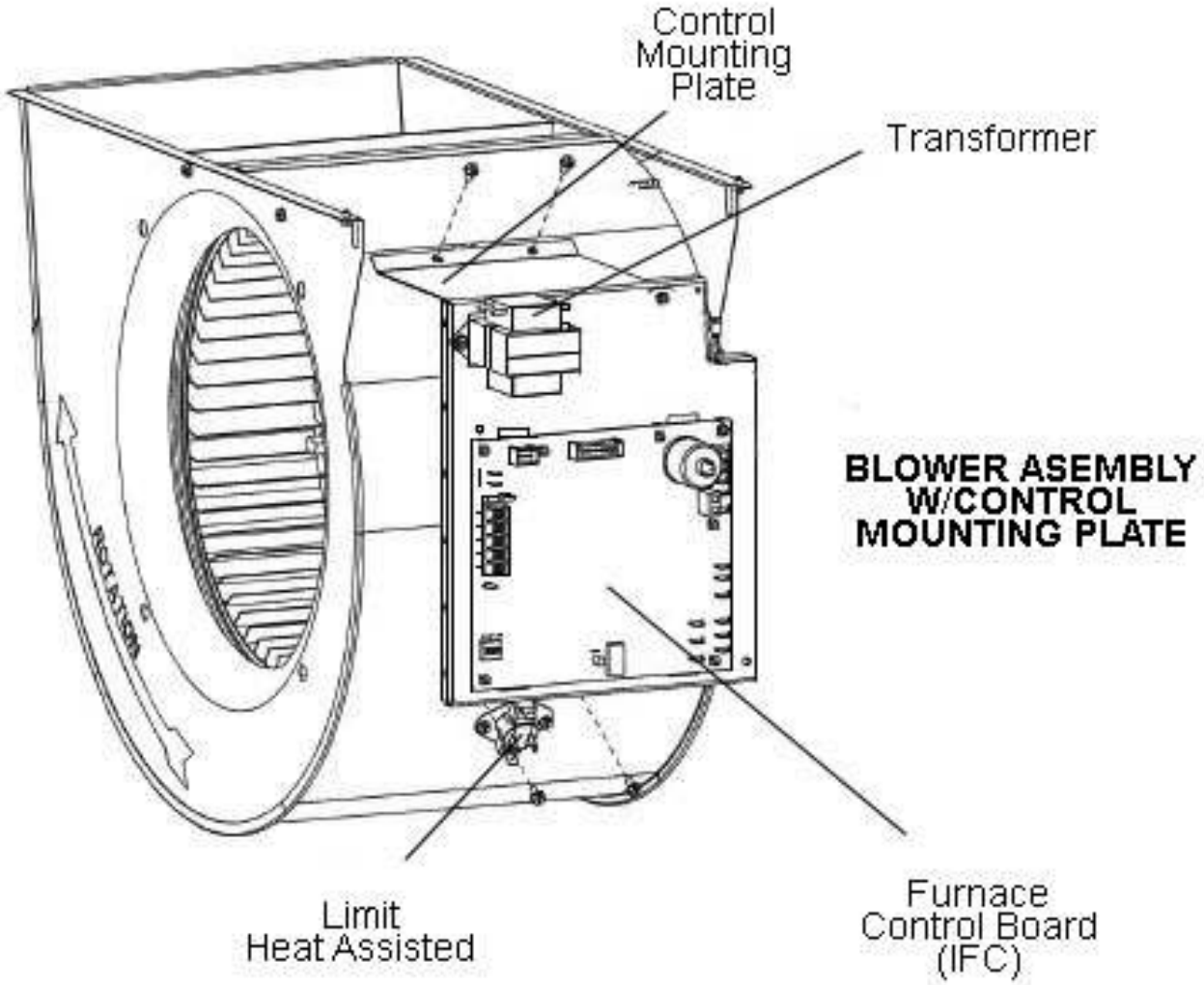

R802V parts breakdown: Burner Assembly

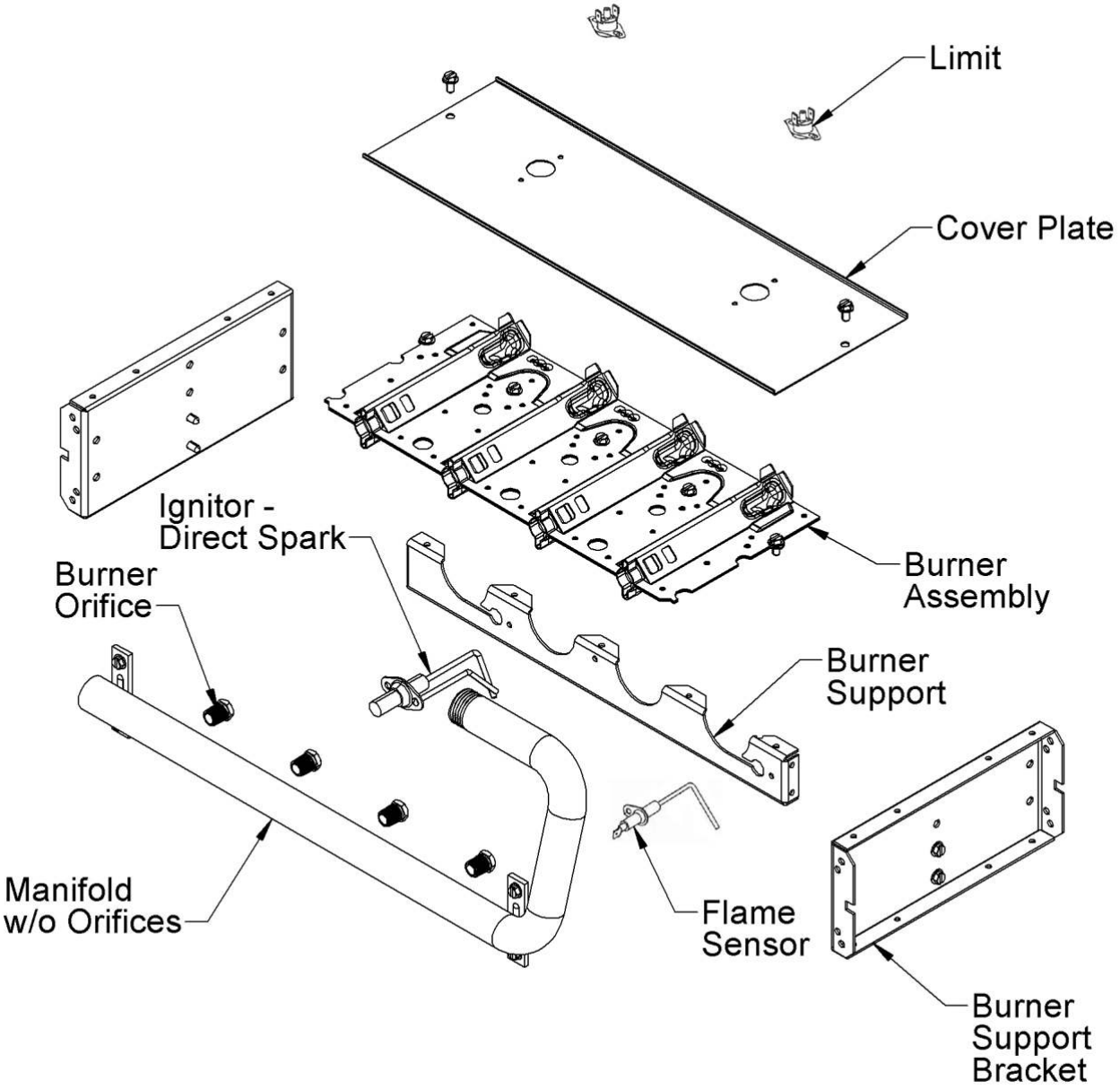

R802V parts breakdown: NOx Insert Assembly

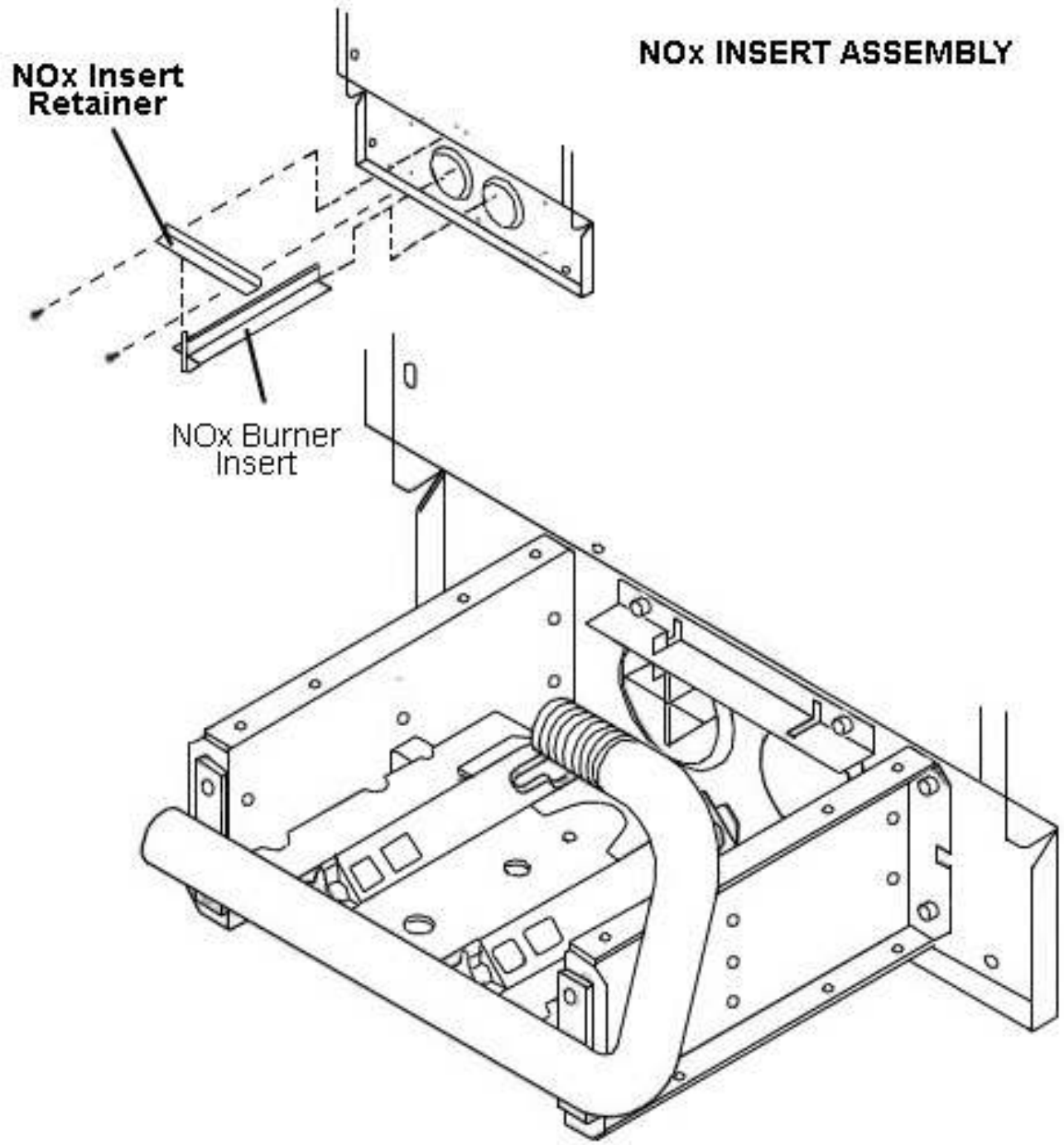

Motors & fans

Part No.	Description	Qty	Replaced By	Fits Models
70-24104-82	Belly Band Kit	1		
AS-104887-11	Blower Assembly	1		R802VA050317MSA, R802VA075317MSA, R802VA075317MXA
AS-104887-12	Blower Assembly	1		R802VA075421MSA, R802VA075421MXA
AS-104887-13	Blower Assembly	1		R802VA100521MSA, R802VA100521MXA, R802VA125524MSA, R802VA125524MXA
AS-105345-01	Blower Assembly	1		R802VA075317ZSB, R802VA075317ZXB
AS-105345-02	Blower Assembly	1		R802VA075421ZSB, R802VA075421ZXB
AS-105345-03	Blower Assembly	1		R802VA100521ZSB, R802VA100521ZXB, R802VA125524ZSB, R802VA125524ZXB
AS-108518-01	Blower Assembly	1		R802V0503A14UHNCAP, R802V0503A14UHSCAP
AS-108519-01	Blower Assembly	1		R802V1005A21UHNCAP, R802V1005A21UHSCAP, R802V1255A24UHNCAP, R802V1255A24UHSCAP
AS-108521-01	Blower Assembly	1		R802V1505A24UHNCAP, R802V1505A24UHSCAP
AS-108525-01	Blower Assembly	1		R802V0755A21DZNCAP, R802V0755A21DZSCAP, R802V1005A21DZNCAP, R802V1005A21DZSCAP, R802V1255A24DZNCAP, R802V1255A24DZSCAP
AS-108526-01	Blower Assembly	1		R802V0503A14DZNCAP, R802V0503A14DZSCAP
AS-108527-01	Blower Assembly	1		R802V0754A17DZNCAP, R802V0754A17DZSCAP
AS-108531-01	Blower Assembly	1		R802V0755A21UHNCAP, R802V0755A21UHSCAP
70-61674-04	Blower Housing w/Wheel	1		R802V0503A14DZNCAP, R802V0503A14DZSCAP
70-61674-06	Blower Housing w/Wheel	1		R802V0755A21DZNCAP, R802V0755A21DZSCAP, R802V1005A21DZNCAP, R802V1005A21DZSCAP, R802V1255A24DZNCAP, R802V1255A24DZSCAP
70-61674-21	Blower Housing w/Wheel	1		R802V0754A17DZNCAP, R802V0754A17DZSCAP
51-102603-01	Blower Motor, ECM 3.0 3/4hp	1		R802VA075421MSA, R802VA075421MXA, R802VA075421ZSB, R802VA075421ZXB, R802VA100521MSA, R802VA100521MXA, R802VA125524MSA, R802VA125524MXA
PD703025	Blower Wheel	1		
PD703026	Blower Wheel	1		
PD703028K	Blower Wheel Kit	1		
70-104182-11	Housing w/Blower Wheel	1		R802V0503A14UHNCAP, R802V0503A14UHSCAP
70-104182-13	Housing w/Blower Wheel	1		R802V0504A17UHNCAP, R802V0504A17UHSCAP, R802V0754A17UHNCAP, R802V0754A17UHSCAP, R802V0755A21UHNCAP, R802V0755A21UHSCAP, R802V1004A17UHNCAP, R802V1004A17UHSCAP
70-104182-17	Housing w/Blower Wheel	1		R802V1005A21UHNCAP, R802V1005A21UHSCAP, R802V1255A24UHNCAP, R802V1255A24UHSCAP, R802V1505A24UHNCAP, R802V1505A24UHSCAP
70-101888-01	Induced Draft Blower w/Gasket	1		R802V0503A14DZNCAP, R802V0503A14DZSCAP, R802V0503A14UHNCAP, R802V0503A14UHSCAP, R802V0504A17UHNCAP, R802V0504A17UHSCAP, R802V0754A17DZNCAP, R802V0754A17DZSCAP, R802V0754A17UHNCAP, R802V0754A17UHSCAP, R802V0755A21DZNCAP, R802V0755A21DZSCAP, R802V0755A21UHNCAP, R802V0755A21UHSCAP, R802V1004A17UHNCAP, R802V1004A17UHSCAP, R802V1005A21DZNCAP, R802V1005A21DZSCAP, R802V1005A21UHNCAP, R802V1005A21UHSCAP
70-101888-02	Induced Draft Blower w/Gasket	1		R802V1255A24DZNCAP, R802V1255A24DZSCAP, R802V1255A24UHNCAP, R802V1255A24UHSCAP, R802V1505A24UHNCAP, R802V1505A24UHSCAP
51-102605-01	Motor - ECM 3.0 - 1 hp	1		R802VA100521ZSB, R802VA100521ZXB, R802VA125524ZSB, R802VA125524ZXB
51-104389-01	Motor - PerfectSpeed - 1/2 hp	1		R802VA050317MSA, R802VA075317MSA, R802VA075317MXA, R802VA075317ZSB, R802VA075317ZXB
51-108483-01	Motor - SelecTech Gen 3 w/PWM (115V - 1 hp) (Programmed G3)	1		R802V0755A21DZNCAP, R802V0755A21DZSCAP, R802V0755A21UHNCAP, R802V0755A21UHSCAP, R802V1005A21DZNCAP, R802V1005A21DZSCAP, R802V1255A24DZNCAP, R802V1255A24DZSCAP, R802V1505A24UHNCAP, R802V1505A24UHSCAP

Part No.	Description	Qty	Replaced By	Fits Models
51-108481-01	Motor - SelecTech Gen 3 w/PWM (115V - 1/2 hp) (Programmed G3)	1		R802V0503A14DZNCAP, R802V0503A14DZSCAP, R802V0503A14UHNCAP, R802V0503A14UHSCAP
51-108482-01	Motor - SelecTech Gen 3 w/PWM (115V - 3/4 hp) (Programmed G3)	1		R802V0754A17DZNCAP, R802V0754A17DZSCAP, R802V1005A21UHNCAP, R802V1005A21UHSCAP, R802V1255A24UHNCAP, R802V1255A24UHSCAP
51-108482-03	Motor - SelecTech Gen 3 w/PWM (115V - 3/4 hp) (Programmed G3)	1		R802V0504A17UHNCAP, R802V0504A17UHSCAP, R802V0754A17UHNCAP, R802V0754A17UHSCAP, R802V1004A17UHNCAP, R802V1004A17UHSCAP
70-19929-10	Motor Mount Arm w/Grommet	1		R802V0503A14UHNCAP, R802V0503A14UHSCAP, R802V0504A17UHNCAP, R802V0504A17UHSCAP, R802V0754A17UHNCAP, R802V0754A17UHSCAP, R802V0755A21UHNCAP, R802V0755A21UHSCAP, R802V1004A17UHNCAP, R802V1004A17UHSCAP, R802V1005A21UHNCAP, R802V1005A21UHSCAP, R802V1255A24UHNCAP, R802V1255A24UHSCAP, R802V1505A24UHNCAP, R802V1505A24UHSCAP
70-19927-04	Motor Mount Band	1		R802V0503A14UHNCAP, R802V0503A14UHSCAP, R802V0504A17UHNCAP, R802V0504A17UHSCAP, R802V0754A17UHNCAP, R802V0754A17UHSCAP, R802V0755A21UHNCAP, R802V0755A21UHSCAP, R802V1004A17UHNCAP, R802V1004A17UHSCAP, R802V1005A21UHNCAP, R802V1005A21UHSCAP, R802V1255A24UHNCAP, R802V1255A24UHSCAP, R802V1505A24UHNCAP, R802V1505A24UHSCAP
70-24104-02	Support - Blower Motor	1		R802V0754A17DZNCAP, R802V0754A17DZSCAP, R802V0755A21DZNCAP, R802V0755A21DZSCAP, R802V1005A21DZNCAP, R802V1005A21DZSCAP, R802V1255A24DZNCAP, R802V1255A24DZSCAP
70-24104-04	Support - Blower Motor	1		R802V0503A14DZNCAP, R802V0503A14DZSCAP

Electrical

Part No.	Description	Qty	Replaced By	Fits Models
62-108462-06	Control Board - EcoNet Furnace Control 2-Stage (SV 14)	1		
62-108462-11	Control Board - M1 Furnace 2-Stage	1		All models
42-22692-06	Door Switch	1		R802V0503A14DZNCAP, R802V0503A14DZSCAP, R802V0754A17DZNCAP, R802V0754A17DZSCAP, R802V0755A21DZNCAP, R802V0755A21DZSCAP, R802V1005A21DZNCAP, R802V1005A21DZSCAP, R802V1255A24DZNCAP, R802V1255A24DZSCAP
ATM-3-5PK	Fuse - 3A Mini Blade Type - Automotive (5 Pack)	1		
ATM-5-5PK	Fuse - 5A Mini Blade Type - Automotive (5 Pack)	1		
62-104061-05K	Integrated Furnace Control Kit (IFC)	1		R802VA050317MSA, R802VA050317MXA, R802VA075317MSA, R802VA075317MXA, R802VA075317ZSB, R802VA075317ZXB, R802VA075421MSA, R802VA075421MXA, R802VA075421ZSB, R802VA075421ZXB, R802VA100521MSA, R802VA100521MXA, R802VA100521ZSB, R802VA100521ZXB, R802VA125524MSA, R802VA125524MXA, R802VA125524ZSB, R802VA125524ZXB
45-105290-03	Main Wiring Harness Assembly - (802V) 2 Stage 80+ Down Flow Blower Communication (Teflon Coated Flame Sense)	1		R802V0503A14DZNCAP, R802V0503A14DZSCAP, R802V0754A17DZNCAP, R802V0754A17DZSCAP, R802V0755A21DZNCAP, R802V0755A21DZSCAP, R802V1005A21DZNCAP, R802V1005A21DZSCAP, R802V1255A24DZNCAP, R802V1255A24DZSCAP
45-108279-01	Motor Power and Control Wire Assembly	1		All models
45-105291-02	Plug Housing Assembly	1		R802V0503A14DZNCAP, R802V0503A14DZSCAP, R802V0754A17DZNCAP, R802V0754A17DZSCAP, R802V0755A21DZNCAP, R802V0755A21DZSCAP, R802V1005A21DZNCAP, R802V1005A21DZSCAP, R802V1255A24DZNCAP, R802V1255A24DZSCAP
46-24256-02	Power Factor Choke	1		R802VA075421ZSB, R802VA075421ZXB, R802VA100521ZSB, R802VA100521ZXB, R802VA125524ZSB, R802VA125524ZXB

Part No.	Description	Qty	Replaced By	Fits Models
46-24256-05	Power Factor Choke	1		R802VA075421MSA, R802VA075421MXA, R802VA100521MSA, R802VA100521MXA, R802VA125524MSA, R802VA125524MXA
46-101496-01	Transformer	1		R802V0503A14DZNCAP, R802V0503A14DZSCAP, R802V0754A17DZNCAP, R802V0755A21DZNCAP, R802V0755A21DZSCAP, R802V1005A21DZNCAP, R802V1005A21DZSCAP, R802V1255A24DZNCAP, R802V1255A24DZSCAP
46-102856-01	Transformer	1		R802VA075317ZSB, R802VA075317ZXB, R802VA075421ZSB, R802VA075421ZXB, R802VA100521ZSB, R802VA100521ZXB, R802VA125524ZSB, R802VA125524ZXB
46-24124-03	Transformer	1		R802V0754A17DZSCAP
46-24124-06K	Transformer Kit	1		R802V0503A14UHNCAP, R802V0503A14UHSCAP, R802V0504A17UHNCAP, R802V0504A17UHSCAP, R802V0754A17UHNCAP, R802V0754A17UHSCAP, R802V0755A21UHNCAP, R802V0755A21UHSCAP, R802V1004A17UHNCAP, R802V1004A17UHSCAP, R802V1005A21UHNCAP, R802V1005A21UHSCAP, R802V1255A24UHNCAP, R802V1255A24UHSCAP, R802V1505A24UHNCAP, R802V1505A24UHSCAP
45-24371-58	Wire Assembly	1		All models
45-104317-01	Wire Assembly - ECM Motor Power	1		R802VA050317MSA, R802VA050317MXA, R802VA075317MSA, R802VA075317MXA, R802VA075317ZSB, R802VA075317ZXB, R802VA075421MSA, R802VA075421MXA, R802VA075421ZSB, R802VA075421ZXB, R802VA100521MSA, R802VA100521MXA, R802VA100521ZSB, R802VA100521ZXB, R802VA125524MSA, R802VA125524MXA, R802VA125524ZSB, R802VA125524ZXB
45-104318-01	Wiring Assembly - Jumper	1		R802VA050317MSA, R802VA050317MXA, R802VA075317MSA, R802VA075317MXA, R802VA075317ZSB, R802VA075317ZXB
45-102785-01	Wiring Harness	1		R802V0755A21UHNCAP, R802V0755A21UHSCAP
45-105290-01	Wiring Harness	1		R802VA075317ZSB, R802VA075317ZXB, R802VA075421ZSB, R802VA075421ZXB, R802VA100521ZSB, R802VA100521ZXB, R802VA125524ZSB, R802VA125524ZXB
45-105291-01	Wiring Harness	1		R802VA075317ZSB, R802VA075317ZXB, R802VA075421ZSB, R802VA075421ZXB, R802VA100521ZSB, R802VA100521ZXB, R802VA125524ZSB, R802VA125524ZXB
45-105293-01	Wiring Harness	1		R802V0503A14DZNCAP, R802V0503A14DZSCAP, R802V0754A17DZNCAP, R802V0754A17DZSCAP, R802V0755A21DZNCAP, R802V0755A21DZSCAP, R802V1005A21DZNCAP, R802V1005A21DZSCAP
45-105293-02	Wiring Harness	1		R802V1255A24DZNCAP, R802V1255A24DZSCAP
45-104932-02	Wiring Harness Assembly (Twist-Lock)	1		R802VA125524MSA, R802VA125524MXA
45-104932-04	Wiring Harness Assembly (Twist-Lock)	1		R802VA050317MSA, R802VA050317MXA, R802VA075317MSA, R802VA075317MXA, R802VA075421MSA, R802VA075421MXA, R802VA100521MSA, R802VA100521MXA
45-104932-09	Wiring Harness Assembly - Twist-Lock 2 Stage 80+ Up Flow Horizontal (125K & 150K) (Teflon Coated Flame Sense)	1		R802V1255A24UHNCAP, R802V1255A24UHSCAP, R802V1505A24UHNCAP, R802V1505A24UHSCAP
45-104932-08	Wiring Harness Assembly - Twist-Lock 2 Stage 80+ Up Flow Horizontal (50K, 75K, 100K) (Teflon Coated Flame Sense)	1		R802V0503A14UHNCAP, R802V0503A14UHSCAP, R802V0504A17UHNCAP, R802V0504A17UHSCAP, R802V0754A17UHNCAP, R802V0754A17UHSCAP, R802V0755A21UHNCAP, R802V0755A21UHSCAP, R802V1004A17UHNCAP, R802V1004A17UHSCAP, R802V1005A21UHNCAP, R802V1005A21UHSCAP

Valves & switches

Part No.	Description	Qty	Replaced By	Fits Models
47-104990-01	Limit Switch - Auto Reset (Board Mount)	1		R802V0503A14UHNCAP, R802V0503A14UHSCAP
47-104990-02	Limit Switch - Auto Reset (Board Mount)	1		R802V0504A17UHNCAP, R802V0504A17UHSCAP
47-104990-03	Limit Switch - Auto Reset (Board Mount)	1		R802VA075317MSA, R802VA075317MXA

Part No.	Description	Qty	Replaced By	Fits Models
47-104990-05	Limit Switch - Auto Reset (Board Mount)	1		R802VA100521MSA, R802VA100521MXA
47-104990-08	Limit Switch - Auto Reset (Board Mount)	1		R802V1005A21UHNCAP, R802V1005A21UHSCAP
47-25349-05	Limit Switch - Auto Reset (Board Mount)	1		R802V0503A14DZNCAP, R802V0503A14DZSCAP
47-25349-13	Limit Switch - Auto Reset (Board Mount)	1		R802V0754A17DZNCAP, R802V0754A17DZSCAP
47-25349-16	Limit Switch - Auto Reset (Board Mount)	1		R802V0755A21DZNCAP, R802V0755A21DZSCAP
47-104990-04K	Limit Switch Kit - Auto Reset (Board Mount)	1		R802V0754A17UHNCAP, R802V0754A17UHSCAP, R802V0755A21UHNCAP, R802V0755A21UHSCAP, R802V1004A17UHNCAP, R802V1004A17UHSCAP, R802V1255A24UHNCAP, R802V1255A24UHSCAP, R802V1505A24UHNCAP, R802V1505A24UHSCAP
47-25349-02K	Limit Switch Kit - Auto Reset (Board Mount)	1		R802V1005A21DZNCAP, R802V1005A21DZSCAP, R802V1255A24DZNCAP, R802V1255A24DZSCAP
47-22860-01K	Limit Switch Kit - Auto Reset (HALC)	1		R802V0503A14DZNCAP, R802V0503A14DZSCAP
47-22860-06K	Limit Switch Kit - Auto Reset (HALC)	1		R802V0503A14UHNCAP, R802V0503A14UHSCAP, R802V0504A17UHNCAP, R802V0504A17UHSCAP, R802V0754A17DZNCAP, R802V0754A17DZSCAP, R802V0754A17UHNCAP, R802V0754A17UHSCAP, R802V0755A21DZNCAP, R802V0755A21DZSCAP, R802V0755A21UHNCAP, R802V0755A21UHSCAP, R802V1004A17UHNCAP, R802V1004A17UHSCAP, R802V1005A21DZNCAP, R802V1005A21DZSCAP, R802V1005A21UHNCAP, R802V1005A21UHSCAP, R802V1255A24DZNCAP, R802V1255A24DZSCAP, R802V1255A24UHNCAP, R802V1255A24UHSCAP, R802V1505A24UHNCAP, R802V1505A24UHSCAP
47-22861-03K	Limit Switch Kit - Manual Reset (Flanged Airstream)	1		All models
42-106209-01K	Pressure Switch Assembly Kit	1		All models

Gas

Part No.	Description	Qty	Replaced By	Fits Models
60-109386-01	2-Stage Gas Valve - NG	1		All models
AS-105478-01	Blower shelf Assembly	1		R802V0503A14DZNCAP, R802V0503A14DZSCAP
AS-105478-02	Blower shelf Assembly	1		R802V0754A17DZNCAP, R802V0754A17DZSCAP
AS-105478-03	Blower shelf Assembly	1		R802V0755A21DZNCAP, R802V0755A21DZSCAP, R802V1005A21DZNCAP, R802V1005A21DZSCAP
AS-105478-06	Blower shelf Assembly	1		R802V1255A24DZNCAP, R802V1255A24DZSCAP
AS-60993-03	Burner	1		R802VA075317ZSB, R802VA075317ZXB, R802VA075421ZSB, R802VA075421ZXB
AS-60993-04	Burner	1		R802VA100521ZSB, R802VA100521ZXB
AS-60993-05	Burner	1		R802VA125524ZSB, R802VA125524ZXB
AS-104944-01	Burner Assembly	1		R802V0504A17UHSCAP
AS-104944-02	Burner Assembly	1		R802VA075317MSA, R802VA075421MSA
AS-104944-03	Burner Assembly	1		R802VA100521MSA
AS-104944-04	Burner Assembly	1		R802VA125524MSA
AS-104944-11	Burner Assembly	1		R802V0504A17UHNCAP
AS-104944-12	Burner Assembly	1		R802VA075317MXA, R802VA075421MXA
AS-104944-13	Burner Assembly	1		R802VA100521MXA
AS-104944-14	Burner Assembly	1		R802VA125524MXA
AS-104944-21	Burner Assembly	1		R802V0503A14UHSCAP
AS-104944-22	Burner Assembly	1		R802V0754A17UHSCAP, R802V0755A21UHSCAP
AS-104944-23	Burner Assembly	1		R802V1004A17UHSCAP, R802V1005A21UHSCAP
AS-104944-24	Burner Assembly	1		R802V1255A24UHSCAP
AS-104944-25	Burner Assembly	1		R802V1505A24UHSCAP
AS-104944-31	Burner Assembly	1		R802V0503A14UHNCAP
AS-104944-32	Burner Assembly	1		R802V0754A17UHNCAP, R802V0755A21UHNCAP
AS-104944-33	Burner Assembly	1		R802V1004A17UHNCAP, R802V1005A21UHNCAP
AS-104944-34	Burner Assembly	1		R802V1255A24UHNCAP
AS-104944-35	Burner Assembly	1		R802V1505A24UHNCAP

Part No.	Description	Qty	Replaced By	Fits Models
AS-60993-12	Burner Assembly	1		R802V0503A14DZNCAP, R802V0503A14DZSCAP, R802V0503A14UHNCAP, R802V0503A14UHSCAP, R802V0504A17UHNCAP, R802V0504A17UHSCAP
AS-60993-13	Burner Assembly	1		R802V0754A17DZNCAP, R802V0754A17DZSCAP, R802V0754A17UHNCAP, R802V0754A17UHSCAP, R802V0755A21DZNCAP, R802V0755A21DZSCAP, R802V0755A21UHNCAP, R802V0755A21UHSCAP
AS-60993-14	Burner Assembly	1		R802V1004A17UHNCAP, R802V1004A17UHSCAP, R802V1005A21DZNCAP, R802V1005A21DZSCAP, R802V1005A21UHNCAP, R802V1005A21UHSCAP
AS-60993-15	Burner Assembly	1		R802V1255A24DZNCAP, R802V1255A24DZSCAP, R802V1255A24UHNCAP, R802V1255A24UHSCAP
AS-60993-16	Burner Assembly	1		R802V1505A24UHNCAP, R802V1505A24UHSCAP
AS-60998-11	Burner Assembly	1		R802V0503A14DZNCAP
AS-60998-12	Burner Assembly	1		R802V0754A17DZNCAP, R802V0755A21DZNCAP
AS-60998-13	Burner Assembly	1		R802V1005A21DZNCAP
AS-60998-14	Burner Assembly	1		R802V1255A24DZNCAP
AS-60998-21	Burner Assembly - 2 Burner	1		R802V0503A14DZSCAP
AS-60998-22	Burner Assembly - 3 Burner	1		R802V0754A17DZSCAP, R802V0755A21DZSCAP
AS-60998-23	Burner Assembly - 4 Burner	1		R802V1005A21DZSCAP
AS-60998-24	Burner Assembly - 5 Burner	1		R802V1255A24DZSCAP
62-23543-01K	Flame Sensor Kit	1		All models
60-101921-81	Gas Valve	1		R802VA050317MSA, R802VA050317MXA, R802VA075317MSA, R802VA075317MXA, R802VA075317ZSB, R802VA075317ZXB, R802VA075421MSA, R802VA075421MXA, R802VA075421ZSB, R802VA075421ZXB, R802VA100521MSA, R802VA100521MXA, R802VA100521ZSB, R802VA100521ZXB, R802VA125524MSA, R802VA125524MXA, R802VA125524ZSB, R802VA125524ZXB
AS-100560-01	Heat Exchanger	1		R802V0754A17UHNCAP, R802V0754A17UHSCAP
AS-100561-01	Heat Exchanger	1		R802V0754A17DZSCAP
AS-100561-02	Heat Exchanger	1		R802V0754A17DZNCAP
AS-61579-04	Heat Exchanger	1		R802V1005A21UHNCAP, R802V1005A21UHSCAP
AS-61579-05	Heat Exchanger	1		R802V1255A24UHNCAP, R802V1255A24UHSCAP
AS-61579-06	Heat Exchanger	1		R802V1505A24UHNCAP, R802V1505A24UHSCAP
AS-61579-07	Heat Exchanger	1		R802V1004A17UHNCAP, R802V1004A17UHSCAP
AS-61579-12	Heat Exchanger	1		R802V0755A21UHNCAP, R802V0755A21UHSCAP
AS-61579-13	Heat Exchanger	1		R802V0504A17UHNCAP, R802V0504A17UHSCAP
AS-61579-14	Heat Exchanger	1		R802V0503A14UHNCAP, R802V0503A14UHSCAP
AS-66997-04	Heat Exchanger	1		R802V1005A21DZSCAP
AS-66997-05	Heat Exchanger	1		R802V1255A24DZSCAP
AS-66997-11	Heat Exchanger	1		R802V0503A14DZSCAP
AS-66997-13	Heat Exchanger	1		R802V0503A14DZNCAP
AS-66997-17	Heat Exchanger	1		R802V1005A21DZNCAP
AS-66997-18	Heat Exchanger	1		R802V1255A24DZNCAP
AS-66997-22	Heat Exchanger	1		R802V0755A21DZSCAP
AS-66997-24	Heat Exchanger	1		R802V0755A21DZNCAP
62-24164-07	Ignitor - Direct Spark Ignition (DSI)	1		R802V0503A14UHNCAP, R802V0503A14UHSCAP, R802V0504A17UHNCAP, R802V0504A17UHSCAP, R802V0754A17UHNCAP, R802V0754A17UHSCAP, R802V0755A21UHNCAP, R802V0755A21UHSCAP, R802V1004A17UHNCAP, R802V1004A17UHSCAP, R802V1005A21UHNCAP, R802V1005A21UHSCAP, R802V1255A24UHNCAP, R802V1255A24UHSCAP, R802V1505A24UHNCAP, R802V1505A24UHSCAP
62-24164-08	Ignitor - Direct Spark Ignition (DSI)	1		R802V0503A14DZNCAP, R802V0503A14DZSCAP, R802V0754A17DZNCAP, R802V0754A17DZSCAP, R802V0755A21DZNCAP, R802V0755A21DZSCAP, R802V1005A21DZNCAP, R802V1005A21DZSCAP, R802V1255A24DZNCAP, R802V1255A24DZSCAP

Part No.	Description	Qty	Replaced By	Fits Models
62-24164-03K	Ignitor Kit - Direct Spark Ignition (DSI)	1		R802VA050317MSA, R802VA050317MXA, R802VA075317MSA, R802VA075317MXA, R802VA075421MSA, R802VA075421MXA, R802VA100521MSA, R802VA100521MXA, R802VA125524MSA, R802VA125524MXA
62-24164-04K	Ignitor Kit - Direct Spark Ignition (DSI)	1		R802VA075317ZSB, R802VA075317ZXB, R802VA075421ZSB, R802VA075421ZXB, R802VA100521ZSB, R802VA100521ZXB, R802VA125524ZSB, R802VA125524ZXB
62-22175-42	Orifice	1/2		All models

Cabinet & hardware

Part No.	Description	Qty	Replaced By	Fits Models
AE-101077-01	Air Deflector - Intake	1		R802V0504A17UHNCAP, R802V0504A17UHSCAP, R802V0754A17UHNCAP, R802V0754A17UHSCAP, R802V0755A21UHNCAP, R802V0755A21UHSCAP, R802V1004A17UHNCAP, R802V1004A17UHSCAP, R802V1005A21UHNCAP, R802V1005A21UHSCAP, R802V1255A24UHNCAP, R802V1255A24UHSCAP, R802V1505A24UHNCAP, R802V1505A24UHSCAP
AE-101077-02	Air Deflector - Intake	1		R802V0503A14UHNCAP, R802V0503A14UHSCAP
AE-104758-01	Angle Bracket	1		R802V0503A14UHNCAP, R802V0503A14UHSCAP
AE-104758-02	Angle Bracket	1		R802V0504A17UHNCAP, R802V0504A17UHSCAP, R802V0754A17UHNCAP, R802V0754A17UHSCAP, R802V1004A17UHNCAP, R802V1004A17UHSCAP
AE-104758-03	Angle Bracket	1		R802V0755A21UHNCAP, R802V0755A21UHSCAP, R802V1005A21UHNCAP, R802V1005A21UHSCAP
AE-104758-04	Angle Bracket	1		R802V1255A24UHNCAP, R802V1255A24UHSCAP, R802V1505A24UHNCAP, R802V1505A24UHSCAP
91-104555-01	Badge Assembly - Rheem	1		R802VA050317MSA, R802VA050317MXA, R802VA075317MSA, R802VA075317MXA, R802VA075421MSA, R802VA075421MXA, R802VA100521MSA, R802VA100521MXA, R802VA125524MSA, R802VA125524MXA
10-66994-01	Baffle - Rear	1		R802V0503A14DZNCAP, R802V0503A14DZSCAP
10-66994-02	Baffle - Rear	1		R802V0754A17DZNCAP, R802V0754A17DZSCAP
10-66994-04	Baffle - Rear	1		R802V1255A24DZNCAP, R802V1255A24DZSCAP
10-66994-06	Baffle - Rear	1		R802V0755A21DZNCAP, R802V0755A21DZSCAP, R802V1005A21DZNCAP, R802V1005A21DZSCAP
AE-61607-01	Baffle - Rear	1		R802V0504A17UHNCAP, R802V0504A17UHSCAP, R802V0754A17UHNCAP, R802V0754A17UHSCAP, R802V1004A17UHNCAP, R802V1004A17UHSCAP
AE-61666-01	Baffle - Rear	1		R802V0503A14UHNCAP, R802V0503A14UHSCAP
AE-61667-01	Baffle - Rear	1		R802V0755A21UHNCAP, R802V0755A21UHSCAP, R802V1005A21UHNCAP, R802V1005A21UHSCAP
AE-61669-01	Baffle - Rear	1		R802V1505A24UHNCAP, R802V1505A24UHSCAP
AE-61670-01	Baffle - Rear	1		R802V1255A24UHNCAP, R802V1255A24UHSCAP
AE-100548-01	Baffle - Side	1		R802V1004A17UHNCAP, R802V1004A17UHSCAP
AE-101899-01	Baffle - Side	1		R802V0755A21DZNCAP, R802V0755A21DZSCAP, R802V0755A21UHNCAP, R802V0755A21UHSCAP
AE-101899-02	Baffle - Side	1		R802V0755A21DZNCAP, R802V0755A21DZSCAP, R802V0755A21UHNCAP, R802V0755A21UHSCAP
AE-61606-01	Baffle - Side	1		R802V0503A14UHNCAP, R802V0503A14UHSCAP, R802V0754A17DZNCAP, R802V0754A17DZSCAP, R802V0754A17UHNCAP, R802V0754A17UHSCAP
AE-61665-01	Baffle - Side	1		R802V1255A24DZNCAP, R802V1255A24DZSCAP, R802V1255A24UHNCAP, R802V1255A24UHSCAP
AE-61668-01	Baffle - Side	1		R802V1005A21DZNCAP, R802V1005A21DZSCAP, R802V1005A21UHNCAP, R802V1005A21UHSCAP
10-66986-25	Base Pan - 14 in. (Rheem Warm Dark Gray)	1		R802V0503A14DZNCAP, R802V0503A14DZSCAP
10-66986-26	Base Pan - 17.5 in. (Rheem Warm Dark Gray)	1		R802V0754A17DZNCAP, R802V0754A17DZSCAP
10-66986-27	Base Pan - 21 in. (Rheem Warm Dark Gray)	1		R802V0755A21DZNCAP, R802V0755A21DZSCAP, R802V1005A21DZNCAP, R802V1005A21DZSCAP
10-66986-28	Base Pan - 24.5 in. (Rheem Warm Dark Gray)	1		R802V1255A24DZNCAP, R802V1255A24DZSCAP

Part No.	Description	Qty	Replaced By	Fits Models
AS-53148-91	Belly Band Motor Mount Kit	1		
63-106763-01	Black Oxide Square Drive Screw, 8-18 x 1/2 in.	1		All models
63-106763-02	Black Oxide Square Drive Screw, 8-18 x 1/4 in.	1		R802V0503A14DZNCAP, R802V0503A14DZSCAP, R802V0503A14UHNCAP, R802V0503A14UHSCAP, R802V0504A17UHSCAP, R802V0754A17DZNCAP, R802V0754A17DZSCAP, R802V0754A17UHNCAP, R802V0754A17UHSCAP, R802V0755A21DZNCAP, R802V0755A21DZSCAP, R802V0755A21UHSCAP, R802V1004A17UHNCAP, R802V1004A17UHSCAP, R802V1005A21DZNCAP, R802V1005A21DZSCAP, R802V1005A21UHNCAP, R802V1005A21UHSCAP, R802V1255A24DZNCAP, R802V1255A24DZSCAP, R802V1255A24UHNCAP, R802V1255A24UHSCAP, R802V1505A24UHNCAP, R802V1505A24UHSCAP
AS-104043-11X	Blower Door/Label Kit	1		R802V0504A17UHNCAP, R802V0504A17UHSCAP, R802V0754A17UHNCAP, R802V0754A17UHSCAP, R802V1004A17UHNCAP, R802V1004A17UHSCAP
AS-104043-12X	Blower Door/Label Kit	1		R802V0755A21UHNCAP, R802V0755A21UHSCAP, R802V1005A21UHNCAP, R802V1005A21UHSCAP
AS-104043-13X	Blower Door/Label Kit	1		R802V1255A24UHNCAP, R802V1255A24UHSCAP, R802V1505A24UHNCAP, R802V1505A24UHSCAP
AS-104809-01	Blower Shelf Assembly	1		R802V0503A14UHNCAP, R802V0503A14UHSCAP
AS-104809-02	Blower Shelf Assembly	1		R802V0504A17UHNCAP, R802V0504A17UHSCAP, R802V0754A17UHNCAP, R802V0754A17UHSCAP, R802V1004A17UHNCAP, R802V1004A17UHSCAP
AS-104809-04	Blower Shelf Assembly	1		R802V1005A21UHNCAP, R802V1005A21UHSCAP
AS-104809-05	Blower Shelf Assembly	1		R802V1255A24UHNCAP, R802V1255A24UHSCAP, R802V1505A24UHNCAP, R802V1505A24UHSCAP
AS-105092-43	Blower/Filter Door	1		R802VA075421ZSB, R802VA075421ZXB, R802VA100521ZSB, R802VA100521ZXB
63-19919-01	Bolt, 1/4-20 x 1-1/2 in.	1		R802V0503A14UHNCAP, R802V0503A14UHSCAP, R802V0504A17UHNCAP, R802V0504A17UHSCAP, R802V0754A17UHNCAP, R802V0754A17UHSCAP, R802V0755A21UHNCAP, R802V0755A21UHSCAP, R802V1004A17UHNCAP, R802V1004A17UHSCAP, R802V1005A21UHNCAP, R802V1005A21UHSCAP, R802V1255A24UHNCAP, R802V1255A24UHSCAP, R802V1505A24UHNCAP, R802V1505A24UHSCAP
63-24108-01	Bolt, 5/16-18 x 1-1/4 in. (Grade 5)	1		R802V0503A14DZNCAP, R802V0503A14DZSCAP, R802V0754A17DZNCAP, R802V0754A17DZSCAP, R802V0755A21DZNCAP, R802V0755A21DZSCAP, R802V1005A21DZNCAP, R802V1005A21DZSCAP, R802V1255A24DZNCAP, R802V1255A24DZSCAP
AE-61874-01	Bottom - Solid	1		R802V0503A14UHNCAP, R802V0503A14UHSCAP
AE-61874-02	Bottom - Solid	1		R802V0504A17UHNCAP, R802V0504A17UHSCAP, R802V0754A17UHNCAP, R802V0754A17UHSCAP, R802V1004A17UHNCAP, R802V1004A17UHSCAP
AE-61874-03	Bottom - Solid	1		R802V0755A21UHNCAP, R802V0755A21UHSCAP, R802V1005A21UHNCAP, R802V1005A21UHSCAP
AE-61874-04	Bottom - Solid	1		R802V1255A24UHNCAP, R802V1255A24UHSCAP, R802V1505A24UHNCAP, R802V1505A24UHSCAP
AS-104968-01	Bottom Plate Assembly	1		R802V0503A14UHNCAP, R802V0503A14UHSCAP
AS-104968-02	Bottom Plate Assembly	1		R802V0504A17UHSCAP, R802V0754A17UHNCAP, R802V0754A17UHSCAP, R802V1004A17UHNCAP, R802V1004A17UHSCAP
AS-104968-03	Bottom Plate Assembly	1		R802V0755A21UHNCAP, R802V0755A21UHSCAP, R802V1005A21UHNCAP, R802V1005A21UHSCAP
AS-104968-04	Bottom Plate Assembly	1		R802V1255A24UHNCAP, R802V1255A24UHSCAP, R802V1505A24UHNCAP, R802V1505A24UHSCAP
AE-61588-02	Bracket - Burner	1		All models

Part No.	Description	Qty	Replaced By	Fits Models
AE-67846-02	Bracket - Heat Exchanger	1		R802V0504A17UHNCAP, R802V0504A17UHSCAP, R802V0754A17DZNCAP, R802V0754A17DZSCAP, R802V0754A17UHNCAP, R802V0754A17UHSCAP, R802V0755A21DZNCAP, R802V0755A21DZSCAP, R802V0755A21UHNCAP, R802V0755A21UHSCAP, R802V1004A17UHNCAP, R802V1004A17UHSCAP, R802V1005A21DZNCAP, R802V1005A21DZSCAP, R802V1005A21UHNCAP, R802V1005A21UHSCAP, R802V1255A24DZNCAP, R802V1255A24DZSCAP, R802V1255A24UHNCAP, R802V1255A24UHSCAP, R802V1505A24UHNCAP, R802V1505A24UHSCAP
AE-102680-01	Bracket - Heat Exchanger (Left Side)	1		R802V0503A14DZNCAP, R802V0503A14DZSCAP, R802V0503A14UHNCAP, R802V0503A14UHSCAP
AE-102680-02	Bracket - Heat Exchanger (Right Side)	1		R802V0503A14DZNCAP, R802V0503A14DZSCAP, R802V0503A14UHNCAP, R802V0503A14UHSCAP
10-61956-01	Bracket - Motor Mount	1		R802V0503A14DZNCAP, R802V0503A14DZSCAP, R802V0754A17DZNCAP, R802V0754A17DZSCAP, R802V0755A21DZNCAP, R802V0755A21DZSCAP, R802V1005A21DZNCAP, R802V1005A21DZSCAP, R802V1255A24DZNCAP, R802V1255A24DZSCAP
AE-104332-01	Bracket Door Mounting	1		R802V0504A17UHNCAP, R802V0504A17UHSCAP, R802V0754A17UHNCAP, R802V0754A17UHSCAP, R802V1004A17UHNCAP, R802V1004A17UHSCAP
AE-104332-02	Bracket Door Mounting	1		R802V0755A21UHNCAP, R802V0755A21UHSCAP, R802V1005A21UHNCAP, R802V1005A21UHSCAP
AE-104332-03	Bracket Door Mounting	1		R802V1255A24UHNCAP, R802V1255A24UHSCAP, R802V1505A24UHNCAP, R802V1505A24UHSCAP
AE-104332-04	Bracket Door Mounting	1		R802V0503A14UHNCAP, R802V0503A14UHSCAP
AS-60996-02	Burner Assembly	1	OBSOLETE	R802VA075317ZSB, R802VA075317ZXB, R802VA075421ZSB, R802VA075421ZXB
AS-60996-03	Burner Assembly	1	OBSOLETE	R802VA100521ZSB, R802VA100521ZXB
AS-60996-04	Burner Assembly	1	OBSOLETE	R802VA125524ZSB, R802VA125524ZXB
AE-104927-01	Burner Bottom Plate	1		R802V0503A14UHNCAP, R802V0503A14UHSCAP, R802V0504A17UHNCAP, R802V0504A17UHSCAP
AE-104927-02	Burner Bottom Plate	1		R802V0754A17UHNCAP, R802V0754A17UHSCAP, R802V0755A21UHNCAP, R802V0755A21UHSCAP
AE-104927-03	Burner Bottom Plate	1		R802V1004A17UHNCAP, R802V1004A17UHSCAP, R802V1005A21UHNCAP, R802V1005A21UHSCAP
AE-104927-04	Burner Bottom Plate	1		R802V1255A24UHNCAP, R802V1255A24UHSCAP
AE-104927-05	Burner Bottom Plate	1		R802V1505A24UHNCAP, R802V1505A24UHSCAP
AS-104042-11X	Burner Door/Label Kit	1		R802V0504A17UHNCAP, R802V0504A17UHSCAP, R802V0754A17UHNCAP, R802V0754A17UHSCAP, R802V1004A17UHNCAP, R802V1004A17UHSCAP
AS-104042-12X	Burner Door/Label Kit	1		R802V0755A21UHNCAP, R802V0755A21UHSCAP, R802V1005A21UHNCAP, R802V1005A21UHSCAP
AS-104042-13X	Burner Door/Label Kit	1		R802V1255A24UHNCAP, R802V1255A24UHSCAP, R802V1505A24UHNCAP, R802V1505A24UHSCAP
AE-60997-01	Burner Support	1		R802V0503A14DZNCAP, R802V0503A14DZSCAP, R802V0503A14UHNCAP, R802V0503A14UHSCAP, R802V0504A17UHNCAP, R802V0504A17UHSCAP
AE-60997-02	Burner Support	1		R802V0754A17DZNCAP, R802V0754A17DZSCAP, R802V0754A17UHNCAP, R802V0754A17UHSCAP, R802V0755A21DZNCAP, R802V0755A21DZSCAP, R802V0755A21UHNCAP, R802V0755A21UHSCAP
AE-60997-03	Burner Support	1		R802V1004A17UHNCAP, R802V1004A17UHSCAP, R802V1005A21DZNCAP, R802V1005A21DZSCAP, R802V1005A21UHNCAP, R802V1005A21UHSCAP
AE-60997-04	Burner Support	1		R802V1255A24DZNCAP, R802V1255A24DZSCAP, R802V1255A24UHNCAP, R802V1255A24UHSCAP
AE-60997-05	Burner Support	1		R802V1505A24UHNCAP, R802V1505A24UHSCAP
45-17055-13	Bushing - Strain Relief	1		All models
45-22980-10	Button Plug with Recessed Head	1		R802V0503A14DZNCAP, R802V0503A14DZSCAP, R802V0754A17DZNCAP, R802V0754A17DZSCAP, R802V0755A21DZNCAP, R802V0755A21DZSCAP, R802V1005A21DZNCAP, R802V1005A21DZSCAP, R802V1255A24DZNCAP, R802V1255A24DZSCAP

Part No.	Description	Qty	Replaced By	Fits Models
64-101148-09	Cable Tie - Double Loop, 11.8"	1		All models
AE-104878-02	Control Board Mounting Plate	1		R802V0503A14UHNCAP, R802V0503A14UHSCAP, R802V0504A17UHNCAP, R802V0504A17UHSCAP, R802V0754A17UHNCAP, R802V0754A17UHSCAP, R802V0755A21UHNCAP, R802V0755A21UHSCAP, R802V1004A17UHNCAP, R802V1004A17UHSCAP, R802V1005A21UHNCAP, R802V1005A21UHSCAP, R802V1255A24UHNCAP, R802V1255A24UHSCAP, R802V1505A24UHNCAP, R802V1505A24UHSCAP
AE-101080-01	Cover Plate - Burner	1		R802V0503A14DZSCAP
AE-101080-02	Cover Plate - Burner	1		R802V0754A17DZSCAP, R802V0754A17UHSCAP, R802V0755A21DZSCAP, R802V0755A21UHSCAP
AE-101080-03	Cover Plate - Burner	1		R802V1004A17UHSCAP, R802V1005A21DZSCAP, R802V1005A21UHSCAP
AE-101080-04	Cover Plate - Burner	1		R802V1255A24DZSCAP, R802V1255A24UHSCAP
AE-101080-05	Cover Plate - Burner	1		R802V1505A24UHSCAP
AE-101080-06	Cover Plate - Burner	1		R802V0503A14UHSCAP, R802V0504A17UHSCAP
AE-101080-11	Cover Plate - Burner	1		R802V0503A14DZNCAP
AE-101080-12	Cover Plate - Burner	1		R802V0754A17DZNCAP, R802V0754A17UHNCAP, R802V0755A21DZNCAP, R802V0755A21UHNCAP
AE-101080-13	Cover Plate - Burner	1		R802V1004A17UHNCAP, R802V1005A21DZNCAP, R802V1005A21UHNCAP
AE-101080-14	Cover Plate - Burner	1		R802V1255A24DZNCAP, R802V1255A24UHNCAP
AE-101080-15	Cover Plate - Burner	1		R802V1505A24UHNCAP
AE-101080-16	Cover Plate - Burner	1		R802V0503A14UHNCAP, R802V0504A17UHNCAP
10-66980-01	Door Angle - 14 in.	1		R802V0503A14DZNCAP, R802V0503A14DZSCAP
10-66980-02	Door Angle - 17.5 in.	1		R802V0754A17DZNCAP, R802V0754A17DZSCAP
10-66980-03	Door Angle - 21 in.	1		R802V0755A21DZNCAP, R802V0755A21DZSCAP, R802V1005A21DZNCAP, R802V1005A21DZSCAP
10-66980-04	Door Angle - 24.5 in.	1		R802V1255A24DZNCAP, R802V1255A24DZSCAP
68-104374-34	Door Filler (Gray) - 14.0 in.	1		R802V0503A14UHNCAP, R802V0503A14UHSCAP
68-104374-31	Door Filler (Gray) - 17.5 in.	1		R802V0504A17UHNCAP, R802V0504A17UHSCAP, R802V0754A17UHNCAP, R802V0754A17UHSCAP, R802V1004A17UHNCAP, R802V1004A17UHSCAP
68-104374-32	Door Filler (Gray) - 21.0 in.	1		R802V0755A21UHNCAP, R802V0755A21UHSCAP, R802V1005A21UHNCAP, R802V1005A21UHSCAP
68-104374-33	Door Filler (Gray) - 24.5 in.	1		R802V1255A24UHNCAP, R802V1255A24UHSCAP, R802V1505A24UHNCAP, R802V1505A24UHSCAP
63-22159-01	Drill-Tip Sheet Metal Screw, 8-18 x 1/2 in.	1		R802V0503A14DZNCAP, R802V0503A14DZSCAP, R802V0754A17DZNCAP, R802V0754A17DZSCAP, R802V0755A21DZNCAP, R802V0755A21DZSCAP, R802V1005A21DZNCAP, R802V1005A21DZSCAP, R802V1255A24DZNCAP, R802V1255A24DZSCAP
AE-66999-06	Duct Flange Angle	1		R802VA050317MSA, R802VA075317MSA, R802VA075421MSA, R802VA100521MSA, R802VA125524MSA
AE-66999-08	Duct Flange Angle	1		R802VA050317MSA, R802VA075317MSA
10-66983-01	Enclosure Door	1		R802V0503A14DZNCAP, R802V0503A14DZSCAP, R802V0754A17DZNCAP, R802V0754A17DZSCAP, R802V0755A21DZNCAP, R802V0755A21DZSCAP, R802V1005A21DZNCAP, R802V1005A21DZSCAP, R802V1255A24DZNCAP, R802V1255A24DZSCAP
58-66691-14	Flue Pipe	1		R802V0503A14DZNCAP, R802V0503A14DZSCAP, R802V0754A17DZNCAP, R802V0754A17DZSCAP, R802V0755A21DZNCAP, R802V0755A21DZSCAP, R802V1005A21DZNCAP, R802V1005A21DZSCAP, R802V1255A24DZNCAP, R802V1255A24DZSCAP
10-66982-01	Flue Pipe/Enclosure Assembly	1		R802V0503A14DZNCAP, R802V0503A14DZSCAP, R802V0754A17DZNCAP, R802V0754A17DZSCAP, R802V0755A21DZNCAP, R802V0755A21DZSCAP, R802V1005A21DZNCAP, R802V1005A21DZSCAP, R802V1255A24DZNCAP, R802V1255A24DZSCAP

Part No.	Description	Qty	Replaced By	Fits Models
AS-100608-01	Flue Pipe/Enclosure Assembly	1		R802V0503A14DZNCAP, R802V0503A14DZSCAP, R802V0754A17DZNCAP, R802V0754A17DZSCAP, R802V0755A21DZNCAP, R802V0755A21DZSCAP, R802V1005A21DZNCAP, R802V1005A21DZSCAP, R802V1255A24DZNCAP, R802V1255A24DZSCAP
68-104413-01	Gasket - 25 ft.	2		R802V0503A14UHNCAP, R802V0503A14UHSCAP, R802V0504A17UHNCAP, R802V0504A17UHSCAP, R802V0754A17UHNCAP, R802V0754A17UHSCAP, R802V0755A21UHNCAP, R802V0755A21UHSCAP, R802V1004A17UHNCAP, R802V1004A17UHSCAP, R802V1005A21UHNCAP, R802V1005A21UHSCAP, R802V1255A24UHNCAP, R802V1255A24UHSCAP, R802V1505A24UHNCAP, R802V1505A24UHSCAP
68-104382-04	Gasket - Blower Shelf	1		R802V0503A14UHNCAP, R802V0503A14UHSCAP
68-104382-01	Gasket - Blower Shelf (17.5 in.)	1		R802V0504A17UHNCAP, R802V0504A17UHSCAP, R802V0754A17UHNCAP, R802V0754A17UHSCAP, R802V1004A17UHNCAP, R802V1004A17UHSCAP
68-104382-02	Gasket - Blower Shelf (21 in.)	1		R802V0755A21UHNCAP, R802V0755A21UHSCAP, R802V1005A21UHNCAP, R802V1005A21UHSCAP
68-104382-03	Gasket - Blower Shelf (24.5 in.)	1		R802V1255A24UHNCAP, R802V1255A24UHSCAP, R802V1505A24UHNCAP, R802V1505A24UHSCAP
AE-61951-53	Gasket - Door	1		R802V0503A14UHNCAP, R802V0503A14UHSCAP
AE-61951-54	Gasket - Door (17.5 in.)	1		R802V0504A17UHNCAP, R802V0504A17UHSCAP, R802V0754A17UHNCAP, R802V0754A17UHSCAP, R802V1004A17UHNCAP, R802V1004A17UHSCAP
AE-61951-55	Gasket - Door (21 in.)	1		R802V0755A21UHNCAP, R802V0755A21UHSCAP, R802V1005A21UHNCAP, R802V1005A21UHSCAP
AE-61951-56	Gasket - Door (24.5 in.)	1		R802V1255A24UHNCAP, R802V1255A24UHSCAP, R802V1505A24UHNCAP, R802V1505A24UHSCAP
68-22079-03	Gasket - Neoprene (1/16 in. x 3/4 in.)	1/2	OBSOLETE	R802V0503A14UHNCAP, R802V0503A14UHSCAP, R802V0504A17UHNCAP, R802V0504A17UHSCAP, R802V0754A17UHNCAP, R802V0754A17UHSCAP, R802V0755A21UHNCAP, R802V0755A21UHSCAP, R802V1004A17UHNCAP, R802V1004A17UHSCAP, R802V1005A21UHNCAP, R802V1005A21UHSCAP, R802V1255A24UHNCAP, R802V1255A24UHSCAP, R802V1505A24UHNCAP, R802V1505A24UHSCAP
68-22079-85	Gasket - Neoprene (1/8 in. x 3/4 in.) - 100 ft. Roll	1		All models
AE-61951-57	Gasket/Stripping - Angle Bracket	1		R802V0503A14UHNCAP, R802V0503A14UHSCAP
AE-61951-58	Gasket/Stripping - Angle Bracket	1		R802V0504A17UHNCAP, R802V0504A17UHSCAP, R802V0754A17UHNCAP, R802V0754A17UHSCAP, R802V1004A17UHNCAP, R802V1004A17UHSCAP
AE-61951-59	Gasket/Stripping - Angle Bracket	1		R802V0755A21UHNCAP, R802V0755A21UHSCAP, R802V1005A21UHNCAP, R802V1005A21UHSCAP
AE-61951-60	Gasket/Stripping - Angle Bracket	1		R802V1255A24UHNCAP, R802V1255A24UHSCAP, R802V1505A24UHNCAP, R802V1505A24UHSCAP
AE-61951-62	Gasket/Stripping - Angle Bracket	1		R802V0503A14UHNCAP, R802V0503A14UHSCAP, R802V0504A17UHNCAP, R802V0504A17UHSCAP, R802V0754A17UHNCAP, R802V0754A17UHSCAP, R802V0755A21UHNCAP, R802V0755A21UHSCAP, R802V1004A17UHNCAP, R802V1004A17UHSCAP, R802V1005A21UHNCAP, R802V1005A21UHSCAP, R802V1255A24UHNCAP, R802V1255A24UHSCAP, R802V1505A24UHNCAP, R802V1505A24UHSCAP
AE-67874-01	Hanger - NOx Insert	1		R802V0503A14DZNCAP, R802V0503A14UHNCAP, R802V0504A17UHNCAP, R802V0754A17DZNCAP, R802V0754A17UHNCAP, R802V0755A21DZNCAP, R802V0755A21UHNCAP, R802V1004A17UHNCAP, R802V1005A21DZNCAP, R802V1005A21UHNCAP, R802V1255A24DZNCAP, R802V1255A24UHNCAP, R802V1505A24UHNCAP
63-17189-03	Hex Nut, 1/4-20, w/External Tooth Lock Washer	1		R802V0503A14UHNCAP, R802V0503A14UHSCAP, R802V0504A17UHNCAP, R802V0504A17UHSCAP, R802V0754A17UHNCAP, R802V0754A17UHSCAP, R802V0755A21UHNCAP, R802V0755A21UHSCAP, R802V1004A17UHNCAP, R802V1004A17UHSCAP, R802V1005A21UHNCAP, R802V1005A21UHSCAP, R802V1255A24UHNCAP, R802V1255A24UHSCAP, R802V1505A24UHNCAP, R802V1505A24UHSCAP

Part No.	Description	Qty	Replaced By	Fits Models
63-24110-01	Hex Nut, 5/16-18, w/Serrated Flange	1		R802V0503A14DZNCAP, R802V0503A14DZSCAP, R802V0754A17DZNCAP, R802V0754A17DZSCAP, R802V0755A21DZNCAP, R802V0755A21DZSCAP, R802V1005A21DZNCAP, R802V1005A21DZSCAP, R802V1255A24DZNCAP, R802V1255A24DZSCAP
AE-61885-02	Ignitor Bracket	1		All models
68-22994-01	Insulation	1	OBSOLETE	R802V0503A14DZNCAP, R802V0503A14DZSCAP, R802V0754A17DZNCAP, R802V0754A17DZSCAP, R802V0755A21DZNCAP, R802V0755A21DZSCAP, R802V1005A21DZNCAP, R802V1005A21DZSCAP, R802V1255A24DZNCAP, R802V1255A24DZSCAP
68-22994-02	Insulation	1	OBSOLETE	R802V0503A14DZNCAP, R802V0503A14DZSCAP, R802V0754A17DZNCAP, R802V0754A17DZSCAP, R802V0755A21DZNCAP, R802V0755A21DZSCAP, R802V1005A21DZNCAP, R802V1005A21DZSCAP, R802V1255A24DZNCAP, R802V1255A24DZSCAP
68-22996-02	Insulation	1		R802V0754A17DZNCAP, R802V0754A17DZSCAP
68-22996-03	Insulation	1		R802V0755A21DZNCAP, R802V0755A21DZSCAP, R802V1005A21DZNCAP, R802V1005A21DZSCAP
68-22996-04	Insulation	1		R802V0503A14DZNCAP, R802V0503A14DZSCAP, R802V0754A17DZNCAP, R802V0754A17DZSCAP, R802V0755A21DZNCAP, R802V0755A21DZSCAP, R802V1005A21DZNCAP, R802V1005A21DZSCAP, R802V1255A24DZNCAP, R802V1255A24DZSCAP
68-22995-05	Insulation - Fiberglass	1	OBSOLETE	R802V0503A14DZNCAP, R802V0503A14DZSCAP
68-22995-06	Insulation - Fiberglass	1	OBSOLETE	R802V0754A17DZNCAP, R802V0754A17DZSCAP
68-22995-07	Insulation - Fiberglass	1	OBSOLETE	R802V0755A21DZNCAP, R802V0755A21DZSCAP, R802V1005A21DZNCAP, R802V1005A21DZSCAP
68-22995-08	Insulation - Fiberglass	1	OBSOLETE	R802V1255A24DZNCAP, R802V1255A24DZSCAP
68-22996-01	Insulation - Fiberglass	1	OBSOLETE	R802V0503A14DZNCAP, R802V0503A14DZSCAP
68-104821-05	Insulation - Foil Back	1		R802V0503A14UHNCAP, R802V0503A14UHSCAP
68-104821-06	Insulation - Foil Back	1		R802V0504A17UHNCAP, R802V0504A17UHSCAP, R802V0754A17UHNCAP, R802V0754A17UHSCAP, R802V1004A17UHNCAP, R802V1004A17UHSCAP
68-104821-07	Insulation - Foil Back	1		R802V0755A21UHNCAP, R802V0755A21UHSCAP, R802V1005A21UHNCAP, R802V1005A21UHSCAP
68-104821-08	Insulation - Foil Back	1		R802V1255A24UHNCAP, R802V1255A24UHSCAP, R802V1505A24UHNCAP, R802V1505A24UHSCAP
68-103537-01	Insulation - Sound	1		R802V0504A17UHNCAP, R802V0504A17UHSCAP, R802V0754A17UHNCAP, R802V0754A17UHSCAP, R802V1004A17UHNCAP, R802V1004A17UHSCAP
68-103537-02	Insulation - Sound	1		R802V0755A21UHNCAP, R802V0755A21UHSCAP, R802V1005A21UHNCAP, R802V1005A21UHSCAP
68-103537-03	Insulation - Sound	1		R802V1255A24UHNCAP, R802V1255A24UHSCAP, R802V1505A24UHNCAP, R802V1505A24UHSCAP
68-103537-04	Insulation - Sound	1		R802V0503A14UHNCAP, R802V0503A14UHSCAP
AE-67925-01	Insulation Retainer	1		All models
10-61475-02	Junction Box	1		R802V0503A14DZNCAP, R802V0503A14DZSCAP, R802V0754A17DZNCAP, R802V0754A17DZSCAP, R802V0755A21DZNCAP, R802V0755A21DZSCAP, R802V1005A21DZNCAP, R802V1005A21DZSCAP, R802V1255A24DZNCAP, R802V1255A24DZSCAP
AE-61475-03	Junction Box	1		R802V0503A14UHNCAP, R802V0503A14UHSCAP, R802V0504A17UHNCAP, R802V0504A17UHSCAP, R802V0754A17UHNCAP, R802V0754A17UHSCAP, R802V0755A21UHNCAP, R802V0755A21UHSCAP, R802V1004A17UHNCAP, R802V1004A17UHSCAP, R802V1005A21UHNCAP, R802V1005A21UHSCAP, R802V1255A24UHNCAP, R802V1255A24UHSCAP, R802V1505A24UHNCAP, R802V1505A24UHSCAP
10-61476-02	Junction Box Cover	1		R802V0503A14DZNCAP, R802V0503A14DZSCAP, R802V0754A17DZNCAP, R802V0754A17DZSCAP, R802V0755A21DZNCAP, R802V0755A21DZSCAP, R802V1005A21DZNCAP, R802V1005A21DZSCAP, R802V1255A24DZNCAP, R802V1255A24DZSCAP

Part No.	Description	Qty	Replaced By	Fits Models
AE-61476-03	Juncton Box Cover	1		R802V0503A14UHNCAP, R802V0503A14UHSCAP, R802V0504A17UHNCAP, R802V0504A17UHSCAP, R802V0754A17UHNCAP, R802V0754A17UHSCAP, R802V0755A21UHNCAP, R802V0755A21UHSCAP, R802V1004A17UHNCAP, R802V1004A17UHSCAP, R802V1005A21UHNCAP, R802V1005A21UHSCAP, R802V1255A24UHNCAP, R802V1255A24UHSCAP, R802V1505A24UHNCAP, R802V1505A24UHSCAP
64-104352-01	Latch Cam	1		R802V0503A14UHNCAP, R802V0503A14UHSCAP, R802V0504A17UHNCAP, R802V0504A17UHSCAP, R802V0754A17UHNCAP, R802V0754A17UHSCAP, R802V0755A21UHNCAP, R802V0755A21UHSCAP, R802V1004A17UHNCAP, R802V1004A17UHSCAP, R802V1005A21UHNCAP, R802V1005A21UHSCAP, R802V1255A24UHNCAP, R802V1255A24UHSCAP, R802V1505A24UHNCAP, R802V1505A24UHSCAP
64-104351-03	Latch Handle/Stud (Gray)	1		R802V0503A14UHNCAP, R802V0503A14UHSCAP, R802V0504A17UHNCAP, R802V0504A17UHSCAP, R802V0754A17UHNCAP, R802V0754A17UHSCAP, R802V0755A21UHNCAP, R802V0755A21UHSCAP, R802V1004A17UHNCAP, R802V1004A17UHSCAP, R802V1005A21UHNCAP, R802V1005A21UHSCAP, R802V1255A24UHNCAP, R802V1255A24UHSCAP, R802V1505A24UHNCAP, R802V1505A24UHSCAP
AS-104043-14X	Lower Door - Panel/Panel Label Kit	1		R802V0503A14UHNCAP, R802V0503A14UHSCAP
63-101978-01	Machine Screw, 1/4-20 x 1 in.	1		R802V0503A14UHNCAP, R802V0503A14UHSCAP, R802V0504A17UHNCAP, R802V0504A17UHSCAP, R802V0754A17UHNCAP, R802V0754A17UHSCAP, R802V0755A21UHNCAP, R802V0755A21UHSCAP, R802V1004A17UHNCAP, R802V1004A17UHSCAP, R802V1005A21UHNCAP, R802V1005A21UHSCAP, R802V1255A24UHNCAP, R802V1255A24UHSCAP, R802V1505A24UHNCAP, R802V1505A24UHSCAP
81-102427-01	Manifold	1		R802V0503A14DZNCAP, R802V0503A14DZSCAP, R802V0503A14UHNCAP, R802V0503A14UHSCAP, R802V0504A17UHNCAP, R802V0504A17UHSCAP
81-102427-02	Manifold	1		R802V0754A17DZNCAP, R802V0754A17DZSCAP, R802V0754A17UHNCAP, R802V0754A17UHSCAP, R802V0755A21DZNCAP, R802V0755A21DZSCAP, R802V0755A21UHNCAP, R802V0755A21UHSCAP
81-102427-03	Manifold	1		R802V1004A17UHNCAP, R802V1004A17UHSCAP, R802V1005A21DZNCAP, R802V1005A21DZSCAP, R802V1005A21UHNCAP, R802V1005A21UHSCAP
81-102427-04	Manifold	1		R802V1255A24DZNCAP, R802V1255A24DZSCAP, R802V1255A24UHNCAP, R802V1255A24UHSCAP
81-102427-05	Manifold	1		R802V1505A24UHNCAP, R802V1505A24UHSCAP
AS-102433-01	Manifold/Orifice Assembly (2 Burner)	1		R802V0503A14DZNCAP, R802V0503A14DZSCAP, R802V0503A14UHNCAP, R802V0503A14UHSCAP, R802V0504A17UHNCAP, R802V0504A17UHSCAP
AS-102433-02	Manifold/Orifice Assembly (3 Burner)	1		R802V0754A17DZNCAP, R802V0754A17DZSCAP, R802V0754A17UHNCAP, R802V0754A17UHSCAP, R802V0755A21DZNCAP, R802V0755A21DZSCAP, R802V0755A21UHNCAP, R802V0755A21UHSCAP
47-104778-50	Model Data Memory Card	1		R802VA050317MSA, R802VA050317MXA
47-104778-51	Model Data Memory Card	1		R802VA075317MSA, R802VA075317MXA
47-104778-52	Model Data Memory Card	1		R802V0755A21UHNCAP, R802V0755A21UHSCAP
47-104778-53	Model Data Memory Card	1		R802VA100521MSA, R802VA100521MXA
47-104778-54	Model Data Memory Card	1		R802VA125524MSA, R802VA125524MXA
47-104778-55	Model Data Memory Card	1		R802VA075317ZSB, R802VA075317ZXB
47-104778-56	Model Data Memory Card	1		R802VA075421ZSB, R802VA075421ZXB
47-104778-57	Model Data Memory Card	1		R802VA100521ZSB, R802VA100521ZXB
47-104778-58	Model Data Memory Card	1		R802VA125524ZSB, R802VA125524ZXB
56-24106-01	Motor Mounting Grommet - Collar (Round)	1		R802V0503A14DZNCAP, R802V0503A14DZSCAP, R802V0754A17DZNCAP, R802V0754A17DZSCAP, R802V0755A21DZNCAP, R802V0755A21DZSCAP, R802V1005A21DZNCAP, R802V1005A21DZSCAP, R802V1255A24DZNCAP, R802V1255A24DZSCAP

Part No.	Description	Qty	Replaced By	Fits Models
56-24106-02	Motor Mounting Grommet - Collar (Round)	1		R802VA075317ZSB, R802VA075317ZXB, R802VA075421ZSB, R802VA075421ZXB, R802VA100521ZSB, R802VA100521ZXB, R802VA125524ZSB, R802VA125524ZXB
56-24107-01	Motor Mounting Grommet - Insert (Mushroom)	1		R802V0503A14DZNCAP, R802V0503A14DZSCAP, R802V0754A17DZNCAP, R802V0754A17DZSCAP, R802V0755A21DZNCAP, R802V0755A21DZSCAP, R802V1005A21DZNCAP, R802V1005A21DZSCAP, R802V1255A24DZNCAP, R802V1255A24DZSCAP
56-24107-02	Motor Mounting Grommet - Insert (Mushroom)	1		R802VA075317ZSB, R802VA075317ZXB, R802VA075421ZSB, R802VA075421ZXB, R802VA100521ZSB, R802VA100521ZXB, R802VA125524ZSB, R802VA125524ZXB
10-67877-02	Mounting Plate	1		R802V0503A14DZNCAP, R802V0503A14DZSCAP, R802V0754A17DZNCAP, R802V0754A17DZSCAP, R802V0755A21DZNCAP, R802V0755A21DZSCAP, R802V1005A21DZNCAP, R802V1005A21DZSCAP, R802V1255A24DZNCAP, R802V1255A24DZSCAP
91-105037-05	Nameplate - 17.5 in. Rheem Prestige	1		R802VA050317MSA, R802VA050317MXA, R802VA075317MSA, R802VA075317MXA
91-105037-06	Nameplate - 21 in. Rheem Prestige	1		R802VA075421MSA, R802VA075421MXA, R802VA100521MSA, R802VA100521MXA
91-105037-07	Nameplate - 24.5 in. Rheem Prestige	1		R802VA125524MSA, R802VA125524MXA
91-103112-08	New Rheem Furnace Badge	1		R802VA075317ZSB, R802VA075317ZXB, R802VA075421ZSB, R802VA075421ZXB, R802VA100521ZSB, R802VA100521ZXB, R802VA125524ZSB, R802VA125524ZXB
AE-67873-01	NOx Insert	1		R802V0503A14DZNCAP, R802V0503A14UHNCAP, R802V0504A17UHNCAP, R802V0754A17DZNCAP, R802V0754A17UHNCAP, R802V0755A21DZNCAP, R802V0755A21UHNCAP, R802V1004A17UHNCAP, R802V1005A21DZNCAP, R802V1005A21UHNCAP, R802V1255A24DZNCAP, R802V1255A24UHNCAP, R802V1505A24UHNCAP
AS-67875-01	NOx Insert Assembly	1		R802V0503A14DZNCAP, R802V0503A14UHNCAP, R802V0504A17UHNCAP, R802V0754A17DZNCAP, R802V0754A17UHNCAP, R802V0755A21DZNCAP, R802V0755A21UHNCAP, R802V1004A17UHNCAP, R802V1005A21DZNCAP, R802V1005A21UHNCAP, R802V1255A24DZNCAP, R802V1255A24UHNCAP, R802V1505A24UHNCAP
AE-67872-01	NOx Insert Retainer	1		R802V0503A14DZNCAP, R802V0503A14UHNCAP, R802V0504A17UHNCAP
AE-67872-02	NOx Insert Retainer	1		R802V0754A17DZNCAP, R802V0754A17UHNCAP, R802V0755A21DZNCAP, R802V0755A21UHNCAP
AE-67872-03	NOx Insert Retainer	1		R802V1004A17UHNCAP, R802V1005A21DZNCAP, R802V1005A21UHNCAP
AE-67872-04	NOx Insert Retainer	1		R802V1255A24DZNCAP, R802V1255A24UHNCAP
AE-67872-05	NOx Insert Retainer	1		R802V1505A24UHNCAP
AE-101704-11X	Panel/Label Kit	1		R802V0754A17DZNCAP, R802V0754A17DZSCAP
AE-101705-11X	Panel/Label Kit	1		R802V0755A21DZNCAP, R802V0755A21DZSCAP, R802V1005A21DZNCAP, R802V1005A21DZSCAP
AE-101706-11X	Panel/Label Kit	1		R802V1255A24DZNCAP, R802V1255A24DZSCAP
AS-101733-11X	Panel/Label Kit	1		R802V0503A14DZNCAP, R802V0503A14DZSCAP
AS-101734-11X	Panel/Label Kit	1		R802V0754A17DZNCAP, R802V0754A17DZSCAP
AS-101735-11X	Panel/Label Kit	1		R802V0755A21DZNCAP, R802V0755A21DZSCAP, R802V1005A21DZNCAP, R802V1005A21DZSCAP
AS-101736-11X	Panel/Label Kit	1		R802V1255A24DZNCAP, R802V1255A24DZSCAP
AS-104040-11X	Panel/Label Kit	1		R802VA050317MSA, R802VA050317MXA, R802VA075317MSA, R802VA075317MXA
AS-104040-12X	Panel/Label Kit	1		R802VA075421MSA, R802VA075421MXA, R802VA100521MSA, R802VA100521MXA
AS-104040-13X	Panel/Label Kit	1		R802VA125524MSA, R802VA125524MXA
AS-104041-11X	Panel/Label Kit	1		R802VA050317MSA, R802VA050317MXA, R802VA075317MSA, R802VA075317MXA

Part No.	Description	Qty	Replaced By	Fits Models
AS-104041-12X	Panel/Label Kit	1		R802VA075421MSA, R802VA075421MXA, R802VA100521MSA, R802VA100521MXA
AS-104041-13X	Panel/Label Kit	1		R802VA125524MSA, R802VA125524MXA
AS-104809-06X	Panel/Label Kit	1		R802V0755A21UHNCAP, R802V0755A21UHSCAP
AS-104968-12X	Panel/Label Kit	1		R802V0504A17UHNCAP
AS-105092-01X	Panel/Label Kit	1		R802V0503A14DZNCAP, R802V0503A14DZSCAP
AS-105092-02X	Panel/Label Kit	1		R802V0754A17DZNCAP, R802V0754A17DZSCAP
AS-105092-03X	Panel/Label Kit	1		R802V0755A21DZNCAP, R802V0755A21DZSCAP, R802V1005A21DZNCAP, R802V1005A21DZSCAP
AS-105092-04X	Panel/Label Kit	1		R802V1255A24DZNCAP, R802V1255A24DZSCAP
AS-105092-42X	Panel/Label Kit	1		R802VA075317ZSB, R802VA075317ZXB
AS-105092-44X	Panel/Label Kit	1		R802VA125524ZSB, R802VA125524ZXB
91-105223-11	Rheem/Ruud Nameplate - Classic Plus/Achiever Plus	1		R802V0504A17UHNCAP, R802V0504A17UHSCAP, R802V0754A17UHNCAP, R802V0754A17UHSCAP, R802V1004A17UHNCAP, R802V1004A17UHSCAP
91-105223-12	Rheem/Ruud Nameplate - Classic Plus/Achiever Plus	1		R802V0755A21UHNCAP, R802V0755A21UHSCAP, R802V1005A21UHNCAP, R802V1005A21UHSCAP
91-105223-13	Rheem/Ruud Nameplate - Classic Plus/Achiever Plus	1		R802V1255A24UHNCAP, R802V1255A24UHSCAP, R802V1505A24UHNCAP, R802V1505A24UHSCAP
91-105223-14	Rheem/Ruud Nameplate - Classic Plus/Achiever Plus	1		R802V0503A14UHNCAP, R802V0503A14UHSCAP
63-20072-06	Screw	1		R802V0503A14DZNCAP, R802V0503A14DZSCAP, R802V0754A17DZNCAP, R802V0754A17DZSCAP, R802V0755A21DZNCAP, R802V0755A21DZSCAP, R802V1005A21DZNCAP, R802V1005A21DZSCAP, R802V1255A24DZNCAP, R802V1255A24DZSCAP
63-103934-02	Screw - Plastic Threading Hex Head (8-18 x .375)	1		R802V0503A14UHNCAP, R802V0503A14UHSCAP, R802V0504A17UHNCAP, R802V0504A17UHSCAP, R802V0754A17UHNCAP, R802V0754A17UHSCAP, R802V0755A21UHNCAP, R802V0755A21UHSCAP, R802V1004A17UHNCAP, R802V1004A17UHSCAP, R802V1005A21UHNCAP, R802V1005A21UHSCAP, R802V1255A24UHNCAP, R802V1255A24UHSCAP, R802V1505A24UHNCAP, R802V1505A24UHSCAP
67-24036-01	Sealant	1		R802V0503A14UHNCAP, R802V0503A14UHSCAP, R802V0504A17UHNCAP, R802V0504A17UHSCAP, R802V0754A17DZNCAP, R802V0754A17DZSCAP, R802V0754A17UHNCAP, R802V0754A17UHSCAP, R802V0755A21DZNCAP, R802V0755A21DZSCAP, R802V0755A21UHNCAP, R802V0755A21UHSCAP, R802V1004A17UHNCAP, R802V1004A17UHSCAP, R802V1005A21DZNCAP, R802V1005A21DZSCAP, R802V1005A21UHNCAP, R802V1005A21UHSCAP, R802V1255A24DZNCAP, R802V1255A24DZSCAP, R802V1255A24UHNCAP, R802V1255A24UHSCAP, R802V1505A24UHNCAP, R802V1505A24UHSCAP
63-106762-01	Sheet Metal Screw - Jacket Trim Head Thread Point	1		R802V0503A14DZNCAP, R802V0503A14DZSCAP, R802V0503A14UHNCAP, R802V0503A14UHSCAP, R802V0504A17UHSCAP, R802V0754A17DZNCAP, R802V0754A17DZSCAP, R802V0754A17UHNCAP, R802V0754A17UHSCAP, R802V0755A21DZNCAP, R802V0755A21DZSCAP, R802V0755A21UHSCAP, R802V1004A17UHNCAP, R802V1004A17UHSCAP, R802V1005A21DZNCAP, R802V1005A21DZSCAP, R802V1005A21UHNCAP, R802V1005A21UHSCAP, R802V1255A24DZNCAP, R802V1255A24DZSCAP, R802V1255A24UHNCAP, R802V1255A24UHSCAP, R802V1505A24UHNCAP, R802V1505A24UHSCAP
63-22426-01	Sheet Metal Screw w/External Tooth Lock Washer, 10-16 x 1/2 in.	1		R802V1255A24DZNCAP, R802V1255A24DZSCAP
63-22338-02	Sheet Metal Screw, 6-20 x 1/4 in.	1		R802V0754A17DZNCAP, R802V0754A17DZSCAP, R802V0755A21DZNCAP, R802V0755A21DZSCAP, R802V1005A21DZNCAP, R802V1005A21DZSCAP, R802V1255A24DZNCAP, R802V1255A24DZSCAP
63-22153-05	Sheet Metal Screw, 8-18 x 3/8 in.	1/2		All models
63-24368-03	Sheet Metal Screw, 8-18 x 1/2 in.	1		R802V0755A21UHNCAP
63-24368-01	Sheet Metal Screw, 8-18 x 1/4 in.	1/2		All models

Part No.	Description	Qty	Replaced By	Fits Models
AS-104923-01	Side Angle Assembly - Left	1		R802V0503A14UHNCAP, R802V0503A14UHSCAP, R802V0504A17UHNCAP, R802V0504A17UHSCAP, R802V0754A17UHNCAP, R802V0754A17UHSCAP, R802V0755A21UHNCAP, R802V0755A21UHSCAP, R802V1004A17UHNCAP, R802V1004A17UHSCAP, R802V1005A21UHNCAP, R802V1005A21UHSCAP, R802V1255A24UHNCAP, R802V1255A24UHSCAP, R802V1505A24UHNCAP, R802V1505A24UHSCAP
AS-104923-02	Side Angle Assembly - Right	1		R802V0503A14UHNCAP, R802V0503A14UHSCAP, R802V0504A17UHNCAP, R802V0504A17UHSCAP, R802V0754A17UHNCAP, R802V0754A17UHSCAP, R802V0755A21UHNCAP, R802V0755A21UHSCAP, R802V1004A17UHNCAP, R802V1004A17UHSCAP, R802V1005A21UHNCAP, R802V1005A21UHSCAP, R802V1255A24UHNCAP, R802V1255A24UHSCAP, R802V1505A24UHNCAP, R802V1505A24UHSCAP
AE-101900-02	Side Baffle - Left	1		R802V0504A17UHNCAP, R802V0504A17UHSCAP
AE-101900-01	Side Baffle - Right	1		R802V0504A17UHNCAP, R802V0504A17UHSCAP
68-21893-03	Sight Glass	1		R802V0503A14DZNCAP, R802V0503A14DZSCAP, R802V0754A17DZNCAP, R802V0754A17DZSCAP, R802V0755A21DZNCAP, R802V0755A21DZSCAP, R802V1005A21DZNCAP, R802V1005A21DZSCAP, R802V1255A24DZNCAP, R802V1255A24DZSCAP
68-21893-04	Sight Glass	1		R802V0503A14UHNCAP, R802V0503A14UHSCAP, R802V0504A17UHNCAP, R802V0504A17UHSCAP, R802V0754A17UHNCAP, R802V0754A17UHSCAP, R802V0755A21UHNCAP, R802V0755A21UHSCAP, R802V1004A17UHNCAP, R802V1004A17UHSCAP, R802V1005A21UHNCAP, R802V1005A21UHSCAP, R802V1255A24UHNCAP, R802V1255A24UHSCAP, R802V1505A24UHNCAP, R802V1505A24UHSCAP
79-21491-83	Silicone Rubber Tubing (18 in. long)	1		All models
79-21491-03	Silicone Rubber Tubing (Bulk - Non-Salable)	1		All models
45-18515-01	Snap-In Bushing - Conductor Protection	1		All models
63-40304-04	Square Nut, 5/16-18	1		R802V0503A14DZNCAP, R802V0503A14DZSCAP, R802V0754A17DZNCAP, R802V0754A17DZSCAP, R802V0755A21DZNCAP, R802V0755A21DZSCAP, R802V1005A21DZNCAP, R802V1005A21DZSCAP, R802V1255A24DZNCAP, R802V1255A24DZSCAP
63-22429-01	Stainless Steel Sheet Metal Screw, 8-18 x 1/2 in.	1/2		All models
AE-61951-51	Stripping - Cut Length	1		R802V0503A14UHNCAP, R802V0503A14UHSCAP, R802V0504A17UHNCAP, R802V0504A17UHSCAP, R802V0754A17UHNCAP, R802V0754A17UHSCAP, R802V0755A21UHNCAP, R802V0755A21UHSCAP, R802V1004A17UHNCAP, R802V1004A17UHSCAP, R802V1005A21UHNCAP, R802V1005A21UHSCAP, R802V1255A24UHNCAP, R802V1255A24UHSCAP, R802V1505A24UHNCAP, R802V1505A24UHSCAP
42-22692-13	Switch - Push Button	1		R802V0503A14UHNCAP, R802V0503A14UHSCAP, R802V0504A17UHNCAP, R802V0504A17UHSCAP, R802V0754A17UHNCAP, R802V0754A17UHSCAP, R802V0755A21UHNCAP, R802V0755A21UHSCAP, R802V1004A17UHNCAP, R802V1004A17UHSCAP, R802V1005A21UHNCAP, R802V1005A21UHSCAP, R802V1255A24UHNCAP, R802V1255A24UHSCAP, R802V1505A24UHNCAP, R802V1505A24UHSCAP
10-66981-09	Top Plate	1		R802V0503A14DZNCAP, R802V0503A14DZSCAP
10-66981-10	Top Plate	1		R802V0754A17DZNCAP, R802V0754A17DZSCAP
10-66981-11	Top Plate	1		R802V0755A21DZNCAP, R802V0755A21DZSCAP, R802V1005A21DZNCAP, R802V1005A21DZSCAP
10-66981-12	Top Plate	1		R802V1255A24DZNCAP, R802V1255A24DZSCAP
AS-104767-01	Top Plate Assembly	1		R802V0503A14UHNCAP, R802V0503A14UHSCAP
AS-104767-02	Top Plate Assembly	1		R802V0504A17UHNCAP, R802V0504A17UHSCAP, R802V0754A17UHNCAP, R802V0754A17UHSCAP, R802V1004A17UHNCAP, R802V1004A17UHSCAP
AS-104767-03	Top Plate Assembly	1		R802V0755A21UHNCAP, R802V0755A21UHSCAP, R802V1005A21UHNCAP, R802V1005A21UHSCAP

Part No.	Description	Qty	Replaced By	Fits Models
AS-104767-04	Top Plate Assembly	1		R802V1255A24UHNCAP, R802V1255A24UHSCAP, R802V1505A24UHNCAP, R802V1505A24UHSCAP
AS-104042-14X	Upper Door - Panel/Panel Label Kit	1		R802V0503A14UHNCAP, R802V0503A14UHSCAP
63-26198-02	Washer - Flat (Fender)	1		R802V0503A14UHNCAP, R802V0503A14UHSCAP, R802V0504A17UHNCAP, R802V0504A17UHSCAP, R802V0754A17UHNCAP, R802V0754A17UHSCAP, R802V0755A21UHNCAP, R802V0755A21UHSCAP, R802V1004A17UHNCAP, R802V1004A17UHSCAP, R802V1005A21UHNCAP, R802V1005A21UHSCAP, R802V1255A24UHNCAP, R802V1255A24UHSCAP, R802V1505A24UHNCAP, R802V1505A24UHSCAP
64-17606-01	Wire & Cable Tie - Nylon Black - 8 in.	1		All models