Rheem R921V Gas Furnace Replacement Parts List

Parts list RP-RHM-R921V | Updated Nov 2026 | 191 parts | 8 model numbers

Genuine Rheem OEM part numbers for the models listed below, compiled from Rheem Manufacturing's service parts catalog. Quantities are per unit. Where Rheem has replaced a part number, the current number is shown under Replaced By. Always confirm the full model and serial number of the unit before ordering.

Models covered

R921V0403A17M4SCAP, R921V0603A17M4SCAP, R921V0703A17M4SCAP, R921V0705A21M4SCAP, R921V0855A21M4SCAP, R921V0855B21M4SCAP, R921V1005A21M4SCAP, R921V1155A24M4SCAP

R921V parts breakdown: Exploded View

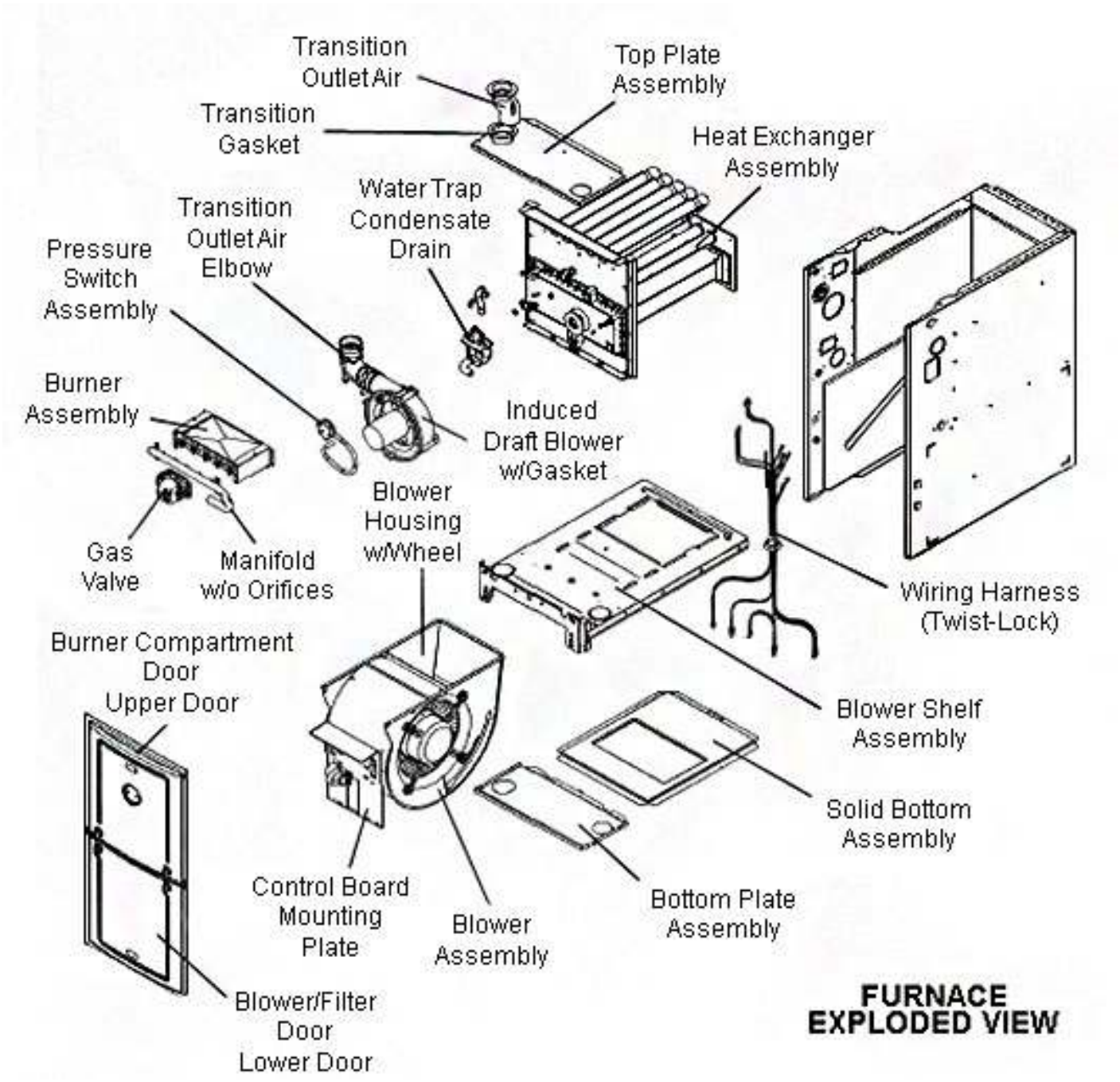

R921V parts breakdown: Junction Box

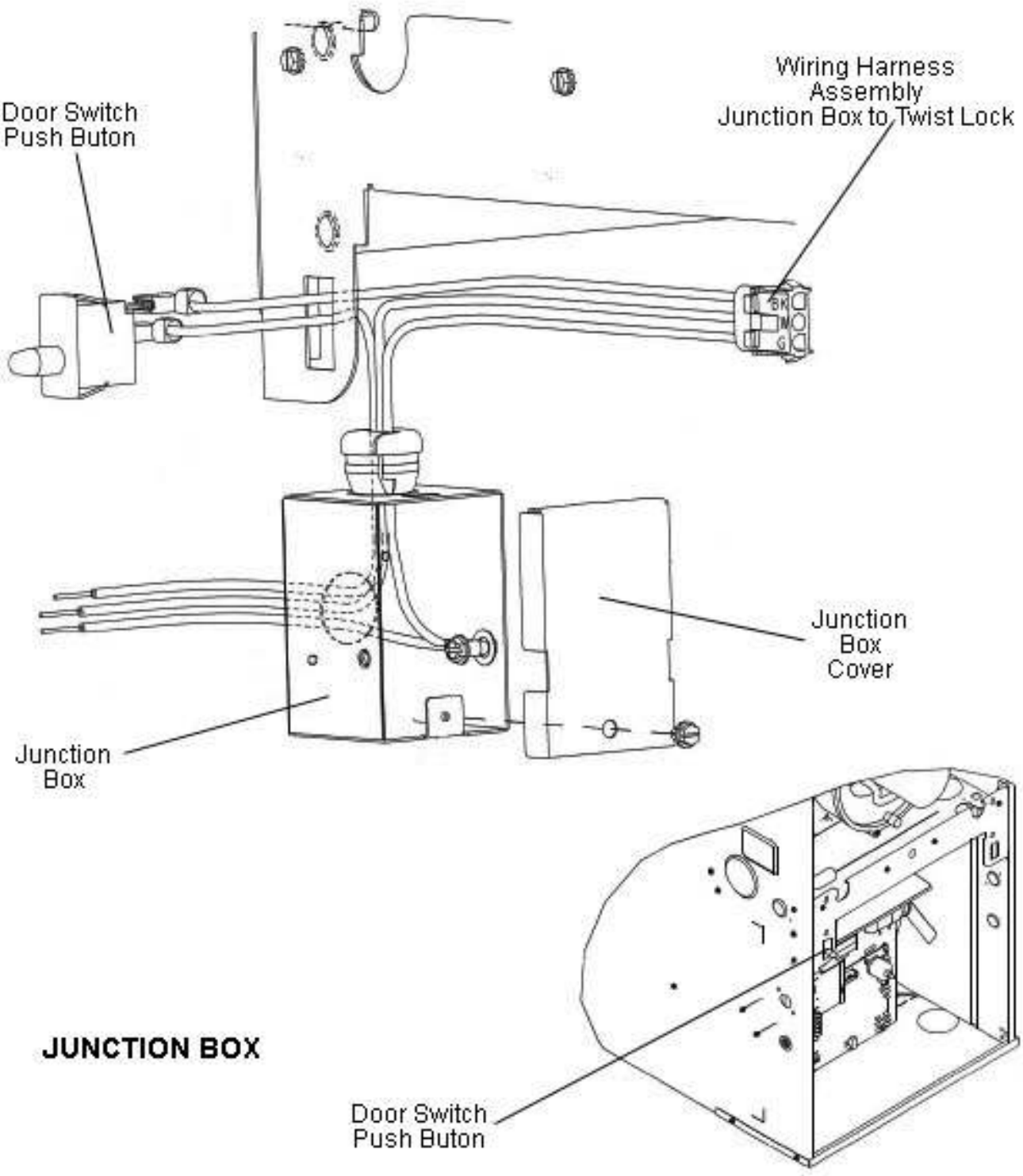

R921V parts breakdown: Induced Draft Blower

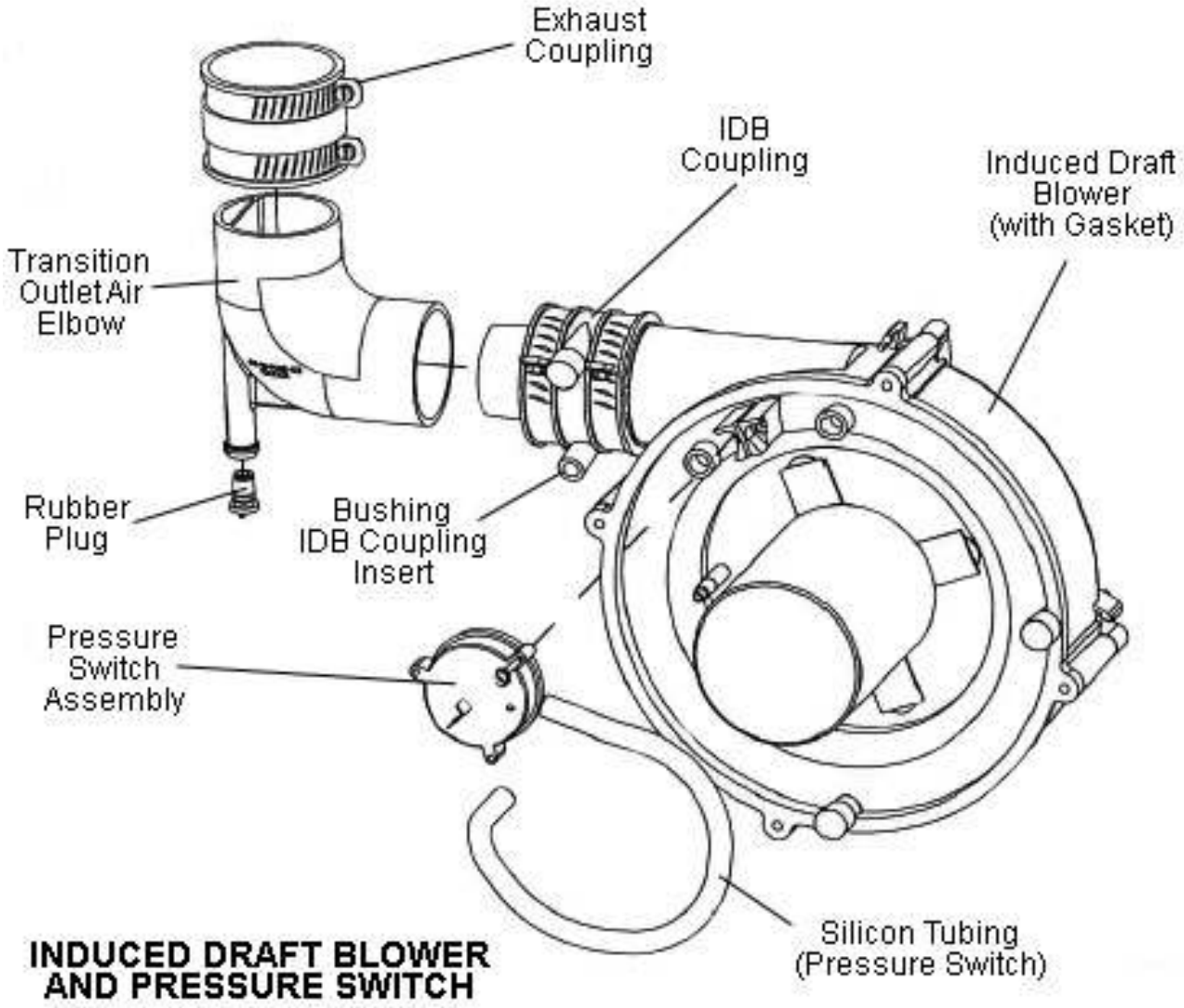

R921V parts breakdown: Blower Assembly

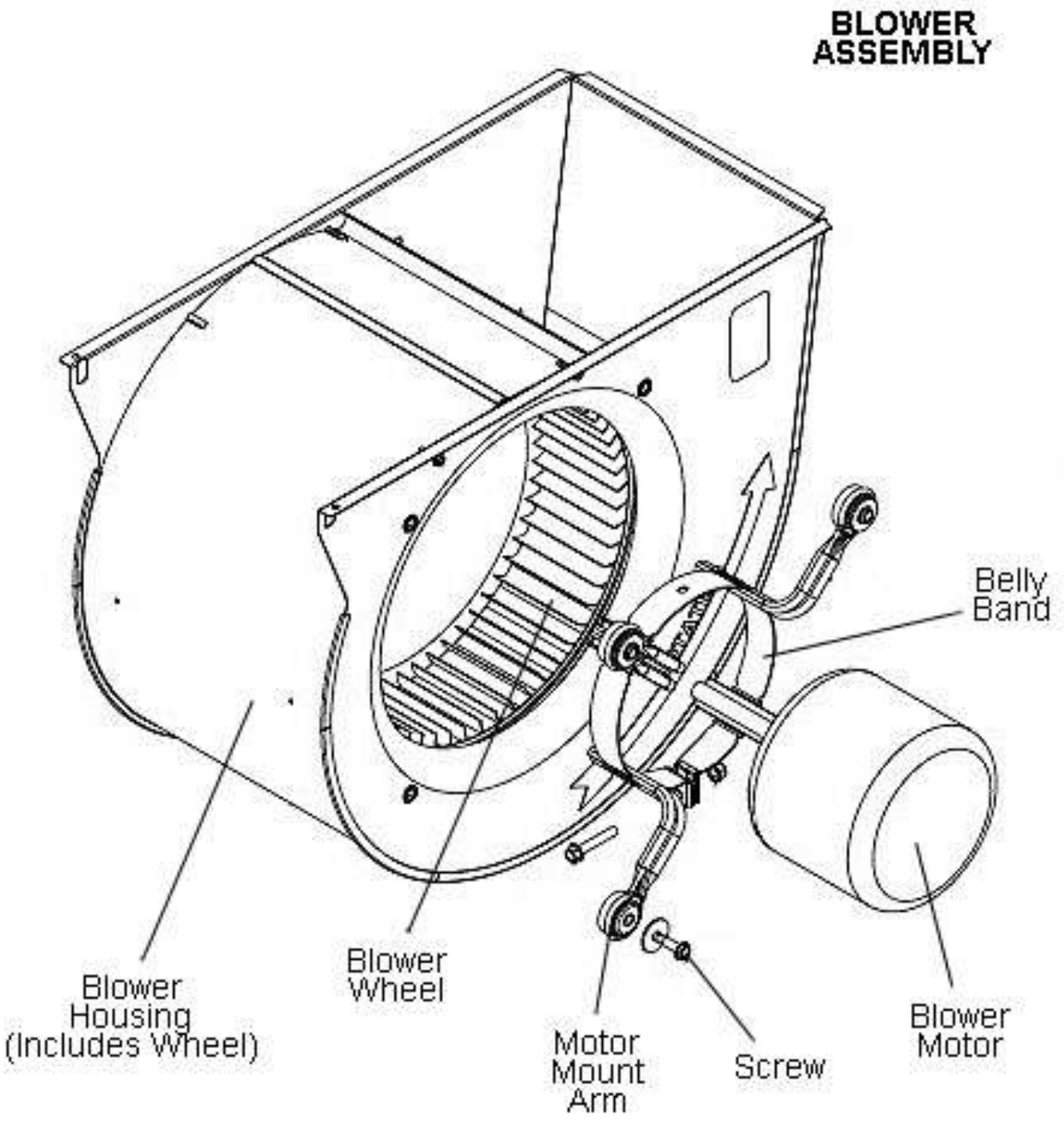

R921V parts breakdown: Control Board Mounting

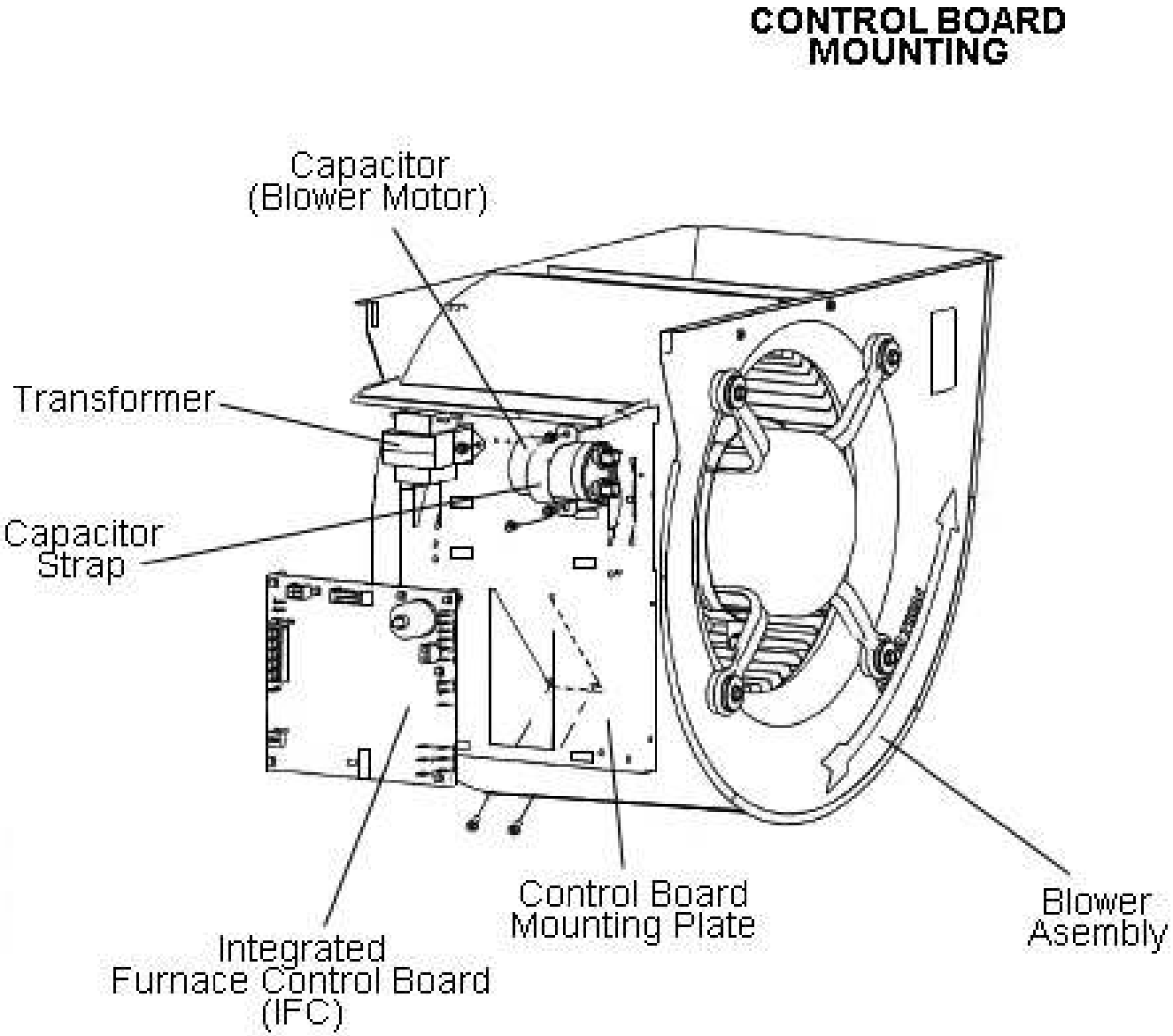

R921V parts breakdown: Burner Assembly

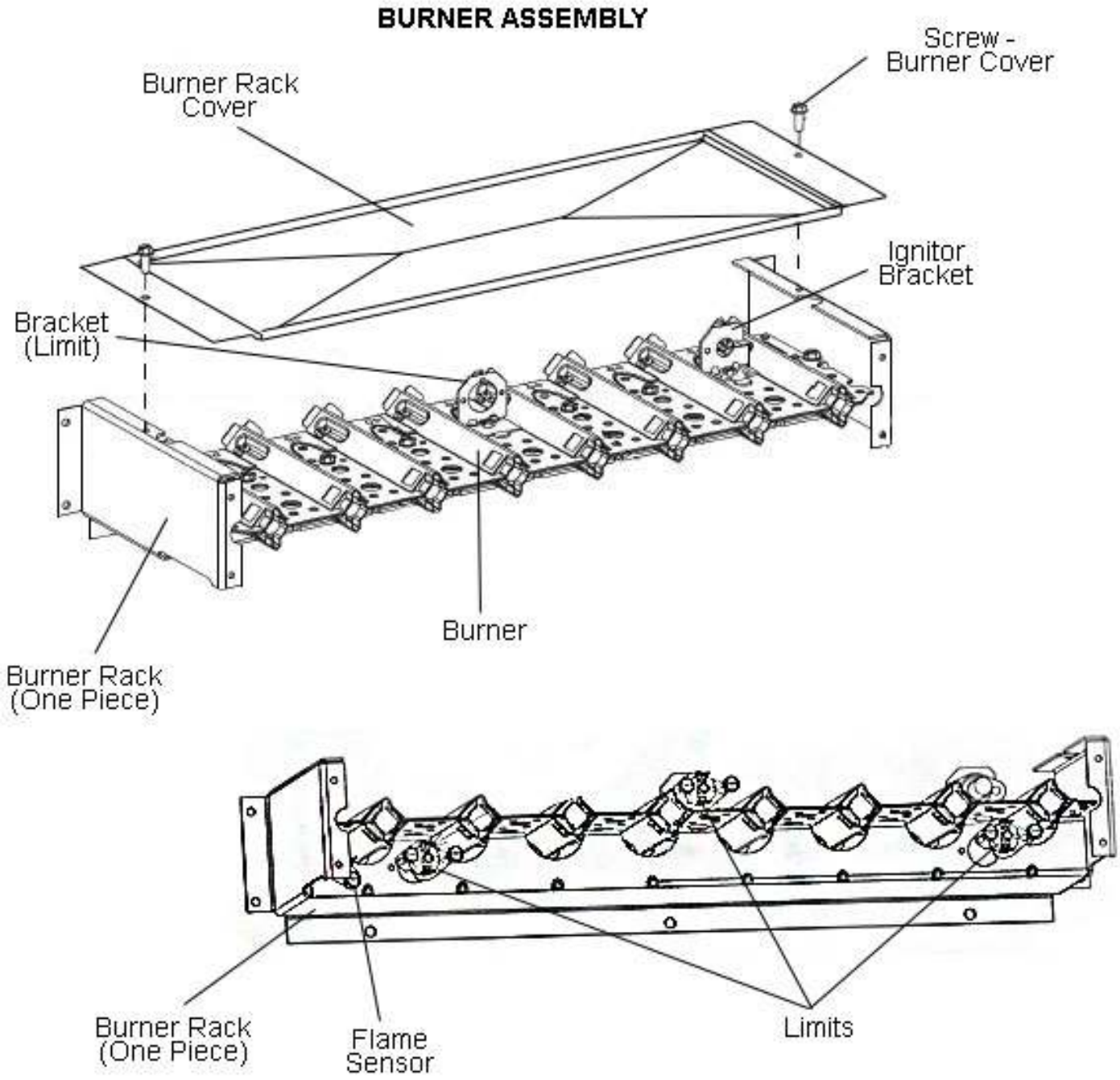

R921V parts breakdown: Heat Exchanger - Collector Box

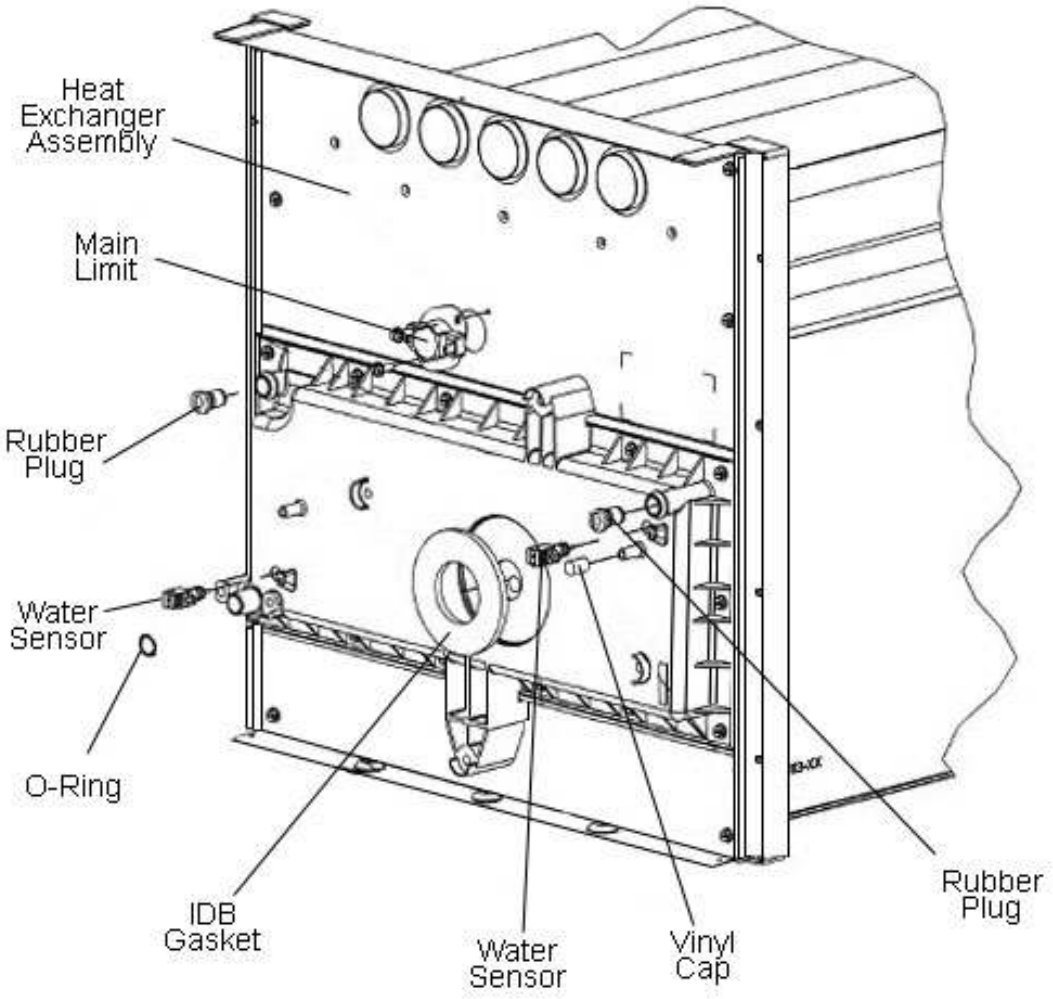

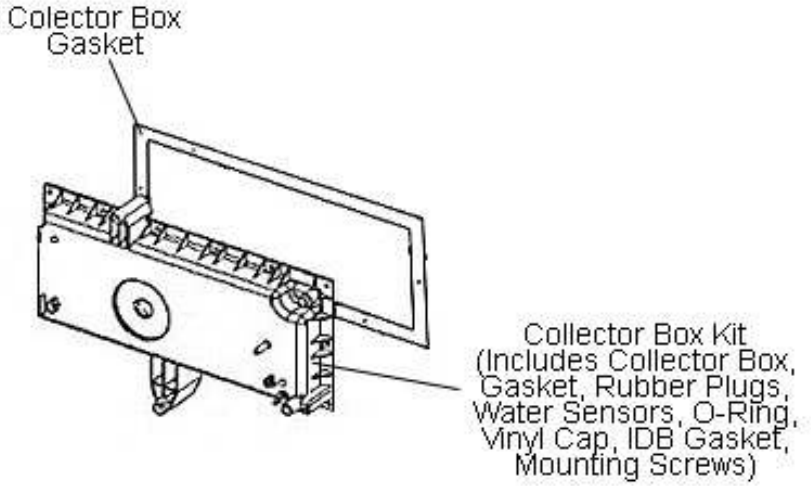

R921V parts breakdown: Trap - Hose Assembly

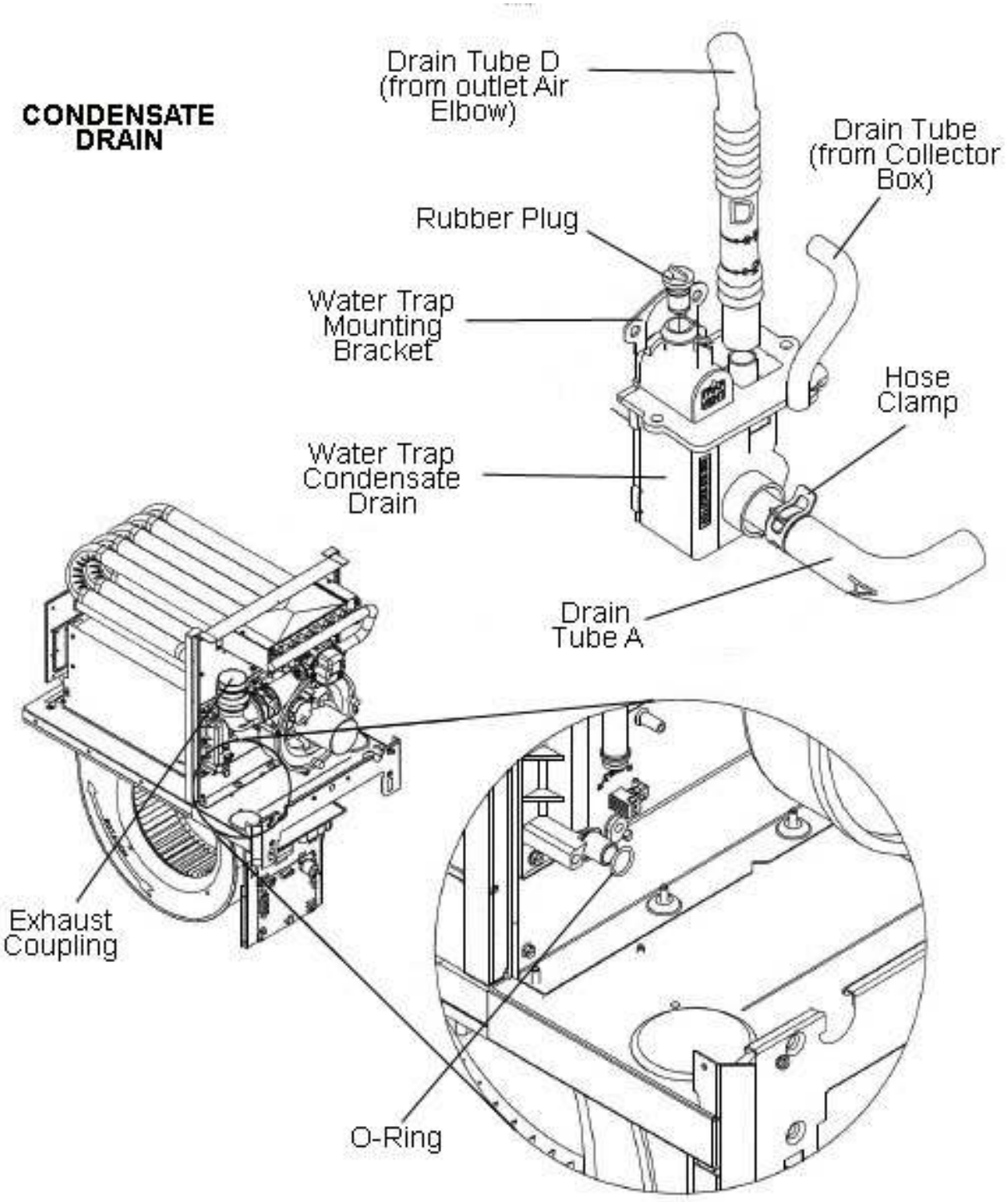

Motors & fans

Part No.	Description	Qty	Replaced By	Fits Models
AS-108522-01	Blower Assembly	1		R921V0403A17M4SCAP
AS-108523-01	Blower Assembly	1		R921V0705A21M4SCAP, R921V0855A21M4SCAP, R921V0855B21M4SCAP, R921V1005A21M4SCAP
70-104182-03	Housing w/Blower Wheel	1		R921V0403A17M4SCAP
70-104182-05	Housing w/Blower Wheel	1		R921V0603A17M4SCAP, R921V0703A17M4SCAP
70-104182-07	Housing w/Blower Wheel	1		R921V0705A21M4SCAP, R921V0855A21M4SCAP, R921V0855B21M4SCAP, R921V1005A21M4SCAP
70-104182-09	Housing w/Blower Wheel	1		R921V1155A24M4SCAP
70-104157-82	Induced Draft Blower w/Gasket	1		All models
51-108483-01	Motor - SelecTech Gen 3 w/PWM (115V - 1 hp) (Programmed G3)	1		R921V0705A21M4SCAP, R921V0855A21M4SCAP, R921V0855B21M4SCAP, R921V1005A21M4SCAP
51-108483-03	Motor - SelecTech Gen 3 w/PWM (115V - 1 hp) (Programmed G3)	1		R921V1155A24M4SCAP
51-108481-01	Motor - SelecTech Gen 3 w/PWM (115V - 1/2 hp) (Programmed G3)	1		R921V0403A17M4SCAP
51-108481-03	Motor - SelecTech Gen 3 w/PWM (115V - 1/2 hp) (Programmed G3)	1		R921V0603A17M4SCAP, R921V0703A17M4SCAP
70-19929-10	Motor Mount Arm w/Grommet	1/2		All models
70-19927-04	Motor Mount Band	1		All models

Electrical

Part No.	Description	Qty	Replaced By	Fits Models
62-108462-12	Control Board - M1 Furnace 1-Stage	1		All models
ATM-3-5PK	Fuse - 3A Mini Blade Type - Automotive (5 Pack)	1		
ATM-5-5PK	Fuse - 5A Mini Blade Type - Automotive (5 Pack)	1		
45-108279-01	Motor Power and Control Wire Assembly	1		All models
46-24124-06K	Transformer Kit	1		All models
47-104184-01K	Water Sensor Kit	1		All models
45-24371-58	Wire Assembly	1		All models
45-104202-09	Wiring Harness Assembly (Twist-Lock)	1		All models

Valves & switches

Part No.	Description	Qty	Replaced By	Fits Models
47-104465-03	Limit Switch - Auto Reset (Flanged Airstream)	1		R921V0855A21M4SCAP, R921V0855B21M4SCAP
47-22861-02	Limit Switch - Manual Reset (Flanged Airstream)	1		R921V0403A17M4SCAP, R921V0603A17M4SCAP, R921V0705A21M4SCAP, R921V0855A21M4SCAP, R921V0855B21M4SCAP, R921V1005A21M4SCAP, R921V1155A24M4SCAP
47-22861-04	Limit Switch - Manual Reset (Flanged Airstream)	1		R921V0703A17M4SCAP
47-104465-01K	Limit Switch Kit - Auto Reset (Flanged Airstream)	1		R921V0603A17M4SCAP, R921V0703A17M4SCAP, R921V0705A21M4SCAP
47-104465-02K	Limit Switch Kit - Auto Reset (Flanged Airstream)	1		R921V0403A17M4SCAP, R921V1005A21M4SCAP, R921V1155A24M4SCAP
42-105499-09	Pressure Switch (-0.70")	1		R921V1155A24M4SCAP
42-105499-06	Pressure Switch (-0.80")	1		R921V0403A17M4SCAP, R921V0603A17M4SCAP, R921V0703A17M4SCAP, R921V0705A21M4SCAP
42-105499-01	Pressure Switch (-1.00")	1		R921V0855A21M4SCAP, R921V0855B21M4SCAP
42-105499-04K	Pressure Switch Kit (-0.60")	1		R921V1005A21M4SCAP

Gas

Part No.	Description	Qty	Replaced By	Fits Models
AS-104123-41	Burner Assembly - 3 Burner	1		R921V0403A17M4SCAP
AS-104123-42	Burner Assembly - 4 Burner	1		R921V0603A17M4SCAP

Part No.	Description	Qty	Replaced By	Fits Models
AS-104123-43	Burner Assembly - 5 Burner	1		R921V0703A17M4SCAP, R921V0705A21M4SCAP
AS-104123-44	Burner Assembly - 6 Burner	1		R921V0855A21M4SCAP, R921V0855B21M4SCAP
AS-104123-45	Burner Assembly - 7 Burner	1		R921V1005A21M4SCAP
AS-104123-46	Burner Assembly - 8 Burner	1		R921V1155A24M4SCAP
AS-61984-13	Burner Halves Assembly	1		R921V0403A17M4SCAP
AS-61984-14	Burner Halves Assembly	1		R921V0603A17M4SCAP
AS-61984-15	Burner Halves Assembly	1		R921V0703A17M4SCAP, R921V0705A21M4SCAP
AS-61984-16	Burner Halves Assembly	1		R921V0855A21M4SCAP, R921V0855B21M4SCAP
AS-61984-17	Burner Halves Assembly	1		R921V1005A21M4SCAP
AS-61984-18	Burner Halves Assembly	1		R921V1155A24M4SCAP
62-23543-08K	Flame Sensor Kit	1		All models
AS-104120-01	Heat Exchanger Assembly	1		R921V0403A17M4SCAP
AS-104120-02	Heat Exchanger Assembly	1		R921V0603A17M4SCAP
AS-104120-15	Heat Exchanger Assembly	1		R921V1005A21M4SCAP
AS-104120-17	Heat Exchanger Assembly	1		R921V0855A21M4SCAP
AS-104120-18	Heat Exchanger Assembly	1		R921V0855B21M4SCAP
AS-104120-21	Heat Exchanger Assembly	1		R921V1155A24M4SCAP
AS-104120-24	Heat Exchanger Assembly	1		R921V0705A21M4SCAP
AS-104858-03	Heat Exchanger Assembly	1		R921V0703A17M4SCAP
62-24141-07	Ignitor - Direct Spark Ignition (DSI)	1		All models
62-22175-51	Orifice	1/2		All models
60-109385-01	Single Stage Gas Valve - NG	1		All models

Cabinet & hardware

Part No.	Description	Qty	Replaced By	Fits Models
63-106763-01	Black Oxide Square Drive Screw, 8-18 x 1/2 in.	1/4/5		All models
63-106763-02	Black Oxide Square Drive Screw, 8-18 x 1/4 in.	1		All models
AS-104135-01	Blower Shelf Assembly	1		R921V0603A17M4SCAP, R921V0703A17M4SCAP
AS-104135-02	Blower Shelf Assembly	1		R921V0705A21M4SCAP, R921V0855A21M4SCAP, R921V0855B21M4SCAP, R921V1005A21M4SCAP
AS-104135-03	Blower Shelf Assembly	1		R921V1155A24M4SCAP
AS-104135-04	Blower Shelf Assembly	1		R921V0403A17M4SCAP
AS-104043-02X	Blower/Lower Door/Label Kit	1		R921V0705A21M4SCAP, R921V0855A21M4SCAP, R921V0855B21M4SCAP, R921V1005A21M4SCAP
AS-104043-03X	Blower/Lower Door/Label Kit	1		R921V1155A24M4SCAP
63-19919-01	Bolt, 1/4-20 x 1-1/2 in.	1		All models
AE-103585-01	Bottom - Solid	1		R921V0403A17M4SCAP, R921V0603A17M4SCAP, R921V0703A17M4SCAP
AE-103585-02	Bottom - Solid	1		R921V0705A21M4SCAP, R921V0855A21M4SCAP, R921V0855B21M4SCAP, R921V1005A21M4SCAP
AE-103585-03	Bottom - Solid	1		R921V1155A24M4SCAP
AS-104314-01	Bottom Plate Assembly	1		R921V0403A17M4SCAP, R921V0603A17M4SCAP, R921V0703A17M4SCAP
AS-104314-02	Bottom Plate Assembly	1		R921V0705A21M4SCAP, R921V0855A21M4SCAP, R921V0855B21M4SCAP, R921V1005A21M4SCAP
AS-104314-03	Bottom Plate Assembly	1		R921V1155A24M4SCAP
AE-61913-02	Bracket - Overtemperature Switch	1		R921V1155A24M4SCAP
AE-104332-01	Bracket Door Mounting	1		R921V0403A17M4SCAP, R921V0603A17M4SCAP, R921V0703A17M4SCAP
AE-104332-02	Bracket Door Mounting	1		R921V0705A21M4SCAP, R921V0855A21M4SCAP, R921V0855B21M4SCAP, R921V1005A21M4SCAP
AE-104332-03	Bracket Door Mounting	1		R921V1155A24M4SCAP
AS-104042-02	Burner Compartment Door - Upper Door	1		R921V0705A21M4SCAP, R921V0855A21M4SCAP, R921V0855B21M4SCAP, R921V1005A21M4SCAP
AE-104121-01	Burner Rack	1		R921V0403A17M4SCAP
AE-104121-02	Burner Rack	1		R921V0603A17M4SCAP

Part No.	Description	Qty	Replaced By	Fits Models
AE-104121-03	Burner Rack	1		R921V0703A17M4SCAP, R921V0705A21M4SCAP
AE-104121-04	Burner Rack	1		R921V0855A21M4SCAP, R921V0855B21M4SCAP
AE-104121-05	Burner Rack	1		R921V1005A21M4SCAP
AE-104121-06	Burner Rack	1		R921V1155A24M4SCAP
AE-104122-01	Burner Rack Cover	1		R921V0403A17M4SCAP
AE-104122-02	Burner Rack Cover	1		R921V0603A17M4SCAP
AE-104122-03	Burner Rack Cover	1		R921V0703A17M4SCAP, R921V0705A21M4SCAP
AE-104122-04	Burner Rack Cover	1		R921V0855A21M4SCAP, R921V0855B21M4SCAP
AE-104122-05	Burner Rack Cover	1		R921V1005A21M4SCAP
AE-104122-06	Burner Rack Cover	1		R921V1155A24M4SCAP
AS-104042-03X	Burner/Upper Door/Label Kit	1		R921V1155A24M4SCAP
45-17055-13	Bushing - Strain Relief	1		All models
64-101148-09	Cable Tie - Double Loop, 11.8"	1		All models
64-103686-03	Clamp - Wire Hose	1		All models
68-104111-11	Collector Box	1		R921V0705A21M4SCAP
68-103546-01	Collector Box Gasket	1		R921V1155A24M4SCAP
68-103546-02	Collector Box Gasket	1		R921V0705A21M4SCAP, R921V0855A21M4SCAP, R921V0855B21M4SCAP, R921V1005A21M4SCAP
68-103546-03	Collector Box Gasket	1		R921V0403A17M4SCAP, R921V0603A17M4SCAP, R921V0703A17M4SCAP
68-104111-81	Collector Box Kit	1		R921V0403A17M4SCAP
68-104111-82	Collector Box Kit	1		R921V0855B21M4SCAP, R921V1005A21M4SCAP
68-104111-83	Collector Box Kit	1		R921V1155A24M4SCAP
68-104111-84	Collector Box Kit	1		R921V0603A17M4SCAP
68-104111-85	Collector Box Kit	1		R921V0703A17M4SCAP
68-104111-86	Collector Box Kit	1		R921V0855A21M4SCAP
AE-103589-01	Control Board Mounting Plate	1		All models
68-104374-31	Door Filler (Gray) - 17.5 in.	1		R921V0403A17M4SCAP, R921V0603A17M4SCAP, R921V0703A17M4SCAP
68-104374-32	Door Filler (Gray) - 21.0 in.	1		R921V0705A21M4SCAP, R921V0855A21M4SCAP, R921V0855B21M4SCAP, R921V1005A21M4SCAP
68-104374-33	Door Filler (Gray) - 24.5 in.	1		R921V1155A24M4SCAP
79-107210-01	EPDM Rubber Tubing (Bulk - Non-Salable)	1		All models
68-104146-04	Exhaust Coupling	1		R921V0855B21M4SCAP
68-104413-01	Gasket - 25 ft.	3		All models
68-104382-01	Gasket - Blower Shelf (17.5 in.)	1		R921V0403A17M4SCAP, R921V0603A17M4SCAP, R921V0703A17M4SCAP
68-104382-02	Gasket - Blower Shelf (21 in.)	1		R921V0705A21M4SCAP, R921V0855A21M4SCAP, R921V0855B21M4SCAP, R921V1005A21M4SCAP
68-104382-03	Gasket - Blower Shelf (24.5 in.)	1		R921V1155A24M4SCAP
68-104151-01	Gasket - Condensate Trap	1		
AE-61951-54	Gasket - Door (17.5 in.)	1		R921V0403A17M4SCAP, R921V0603A17M4SCAP, R921V0703A17M4SCAP
AE-61951-55	Gasket - Door (21 in.)	1		R921V0705A21M4SCAP, R921V0855A21M4SCAP, R921V0855B21M4SCAP, R921V1005A21M4SCAP
AE-61951-56	Gasket - Door (24.5 in.)	1		R921V1155A24M4SCAP
68-104152-01	Gasket - Induced Draft Blower	1		All models
68-22079-03	Gasket - Neoprene (1/16 in. x 3/4 in.)	1	OBSOLETE	All models
68-22079-85	Gasket - Neoprene (1/8 in. x 3/4 in.) - 100 ft. Roll	2		All models
56-22114-06	Grommet - Gas Pipe	1		All models
63-17189-03	Hex Nut, 1/4-20, w/External Tooth Lock Washer	1		All models
AE-61885-02	Ignitor Bracket	1		All models
68-103536-01	Insulation - Foil Back	1		R921V0403A17M4SCAP, R921V0603A17M4SCAP, R921V0703A17M4SCAP
68-103536-02	Insulation - Foil Back	1		R921V0705A21M4SCAP, R921V0855A21M4SCAP, R921V0855B21M4SCAP, R921V1005A21M4SCAP

Part No.	Description	Qty	Replaced By	Fits Models
68-103536-03	Insulation - Foil Back	1		R921V1155A24M4SCAP
68-103537-01	Insulation - Sound	1		R921V0403A17M4SCAP, R921V0603A17M4SCAP, R921V0703A17M4SCAP
68-103537-02	Insulation - Sound	1		R921V0705A21M4SCAP, R921V0855A21M4SCAP, R921V0855B21M4SCAP, R921V1005A21M4SCAP
68-103537-03	Insulation - Sound	1		R921V1155A24M4SCAP
AE-67925-01	Insulation Retainer	1		All models
AE-61475-03	Junction Box	1		All models
AE-61476-03	Juncton Box Cover	1		All models
PD644035	Latch & Handle Kit - Gas Furnace (Gray)	1		
64-104352-01	Latch Cam	1		All models
64-104351-03	Latch Handle/Stud (Gray)	1		All models
AE-104192-01	Left Jacket Baffle	1		R921V0703A17M4SCAP, R921V1005A21M4SCAP
AE-104192-02	Left Jacket Baffle	1		R921V0403A17M4SCAP
AE-104192-03	Left Jacket Baffle	1		R921V0603A17M4SCAP, R921V0705A21M4SCAP
AE-104192-04	Left Jacket Baffle	1		R921V0855A21M4SCAP, R921V0855B21M4SCAP
AE-104192-06	Left Jacket Baffle	1		R921V1155A24M4SCAP
63-101978-01	Machine Screw, 1/4-20 x 1 in.	1/2		All models
81-104526-01	Manifold	1		R921V0403A17M4SCAP
81-104526-02	Manifold	1		R921V0603A17M4SCAP
81-104526-03	Manifold	1		R921V0703A17M4SCAP, R921V0705A21M4SCAP
81-104526-04	Manifold	1		R921V0855A21M4SCAP, R921V0855B21M4SCAP
81-104526-05	Manifold	1		R921V1005A21M4SCAP
81-104526-06	Manifold	1		R921V1155A24M4SCAP
68-104386-02	O-Ring	1		All models
AS-104042-01X	Panel/Label Kit	1		R921V0403A17M4SCAP, R921V0603A17M4SCAP, R921V0703A17M4SCAP
AS-104043-01X	Panel/Label Kit	1		R921V0403A17M4SCAP, R921V0603A17M4SCAP, R921V0703A17M4SCAP
68-104446-01	Parts Bag	1		All models
AE-104190-01	Rear Jacket Baffle	1		R921V0403A17M4SCAP, R921V0603A17M4SCAP, R921V0703A17M4SCAP
AE-104190-02	Rear Jacket Baffle	1		R921V0705A21M4SCAP, R921V0855A21M4SCAP, R921V0855B21M4SCAP, R921V1005A21M4SCAP
AE-104190-03	Rear Jacket Baffle	1		R921V1155A24M4SCAP
45-104315-01	Rectangular Flush Mount Plug	1		All models
AE-104191-01	Right Jacket Baffle	1		R921V0703A17M4SCAP, R921V1005A21M4SCAP
AE-104191-02	Right Jacket Baffle	1		R921V0403A17M4SCAP
AE-104191-03	Right Jacket Baffle	1		R921V0603A17M4SCAP
AE-104191-04	Right Jacket Baffle	1		R921V0705A21M4SCAP, R921V0855A21M4SCAP, R921V0855B21M4SCAP
AE-104191-06	Right Jacket Baffle	1		R921V1155A24M4SCAP
45-103596-01	Round Flush Mount Plug	1		All models
45-103596-03	Round Flush Mount Plug	1		All models
45-103596-04	Round Flush Mount Plug	1		All models
45-103596-06	Round Flush Mount Plug	1		All models
63-103934-02	Screw - Plastic Threading Hex Head (8-18 x .375)	1		All models
63-104375-02	Screw - Sheet Metal - 8-32 x 0.4 in.	1		All models
63-104523-01	Screw - Sheet Metal - 8-32 x 1/2 in.	5/6		All models
63-104375-01	Screw - Sheet Metal - 8-32 x 3.3 in.	1		All models
63-22153-11	Screws - Sheet Metal. 8-18 x 3/4 in.	2/3		All models
67-24036-01	Sealant	1		All models
63-106762-01	Sheet Metal Screw - Jacket Trim Head Thread Point	2		All models
63-22338-02	Sheet Metal Screw, 6-20 x 1/4 in.	1		All models

Part No.	Description	Qty	Replaced By	Fits Models
63-22153-05	Sheet Metal Screw, 8-18 x 3/8 in.	1/2		All models
63-24368-03	Sheet Metal Screw, 8-18 x 1/2 in.	1		All models
63-24368-01	Sheet Metal Screw, 8-18 x 1/4 in.	1/2/3		All models
68-21893-04	Sight Glass	1		All models
45-18515-01	Snap-In Bushing - Conductor Protection	1		All models
63-22429-01	Stainless Steel Sheet Metal Screw, 8-18 x 1/2 in.	1/2/3/4		All models
AE-61951-51	Stripping - Cut Length	1		All models
AE-104127-01	Support - Heat Exchanger	1		R921V0403A17M4SCAP, R921V0603A17M4SCAP, R921V0703A17M4SCAP
AE-104127-02	Support - Heat Exchanger	1		R921V0705A21M4SCAP, R921V0855A21M4SCAP, R921V0855B21M4SCAP, R921V1005A21M4SCAP
AE-104127-03	Support - Heat Exchanger	1		R921V1155A24M4SCAP
42-22692-13	Switch - Push Button	1		All models
AS-104134-01	Top Plate Assembly	1		R921V0403A17M4SCAP, R921V0603A17M4SCAP, R921V0703A17M4SCAP
AS-104134-02	Top Plate Assembly	1		R921V0705A21M4SCAP, R921V0855A21M4SCAP, R921V0855B21M4SCAP, R921V1005A21M4SCAP
AS-104134-03	Top Plate Assembly	1		R921V1155A24M4SCAP
68-24022-03	Transition - Gasket	1		All models
68-104133-02	Transition - Outlet Air	1		All models
68-104145-03	Transition - Outlet Air Elbow	1		All models
56-103685-01	Vinyl Cap	1		All models
63-26198-02	Washer - Flat (Fender)	1/2		All models
68-104346-01K	Water Trap Kit - Condensate Drain	1		All models
AE-104385-01	Water Trap Mounting Bracket	1		All models
64-17606-01	Wire & Cable Tie - Nylon Black - 8 in.	1		All models