# Rheem R951T Gas Furnace Replacement Parts List

Parts list RP-RHM-R951T | Updated Nov 2026 | 229 parts | 20 model numbers

Genuine Rheem OEM part numbers for the models listed below, compiled from Rheem Manufacturing's service parts catalog. Quantities are per unit. Where Rheem has replaced a part number, the current number is shown under Replaced By. Always confirm the full model and serial number of the unit before ordering.

## Models covered

R951T0403A14M4SNAS, R951T0403A14M4SNASRHC, R951T0403A14UDSNAS, R951T0403A14UDSNASRHC, R951T0403A17M4SNAS, R951T0403A17M4SNASRHC, R951T0603A17M4SNAS, R951T0603A17M4SNASRHC, R951T0605A21M4SNAS, R951T0605A21M4SNASRHC, R951T0703A17M4SNAS, R951T0703A17M4SNASRHC, R951T0705A21M4SNAS, R951T0705A21M4SNASRHC, R951T0855A21M4SNAS, R951T0855A21M4SNASRHC, R951T1005A21M4SNAS, R951T1005A21M4SNASRHC, R951T1155A24M4SNAS, R951T1155A24M4SNASRHC

## R951T parts breakdown: Exploded View

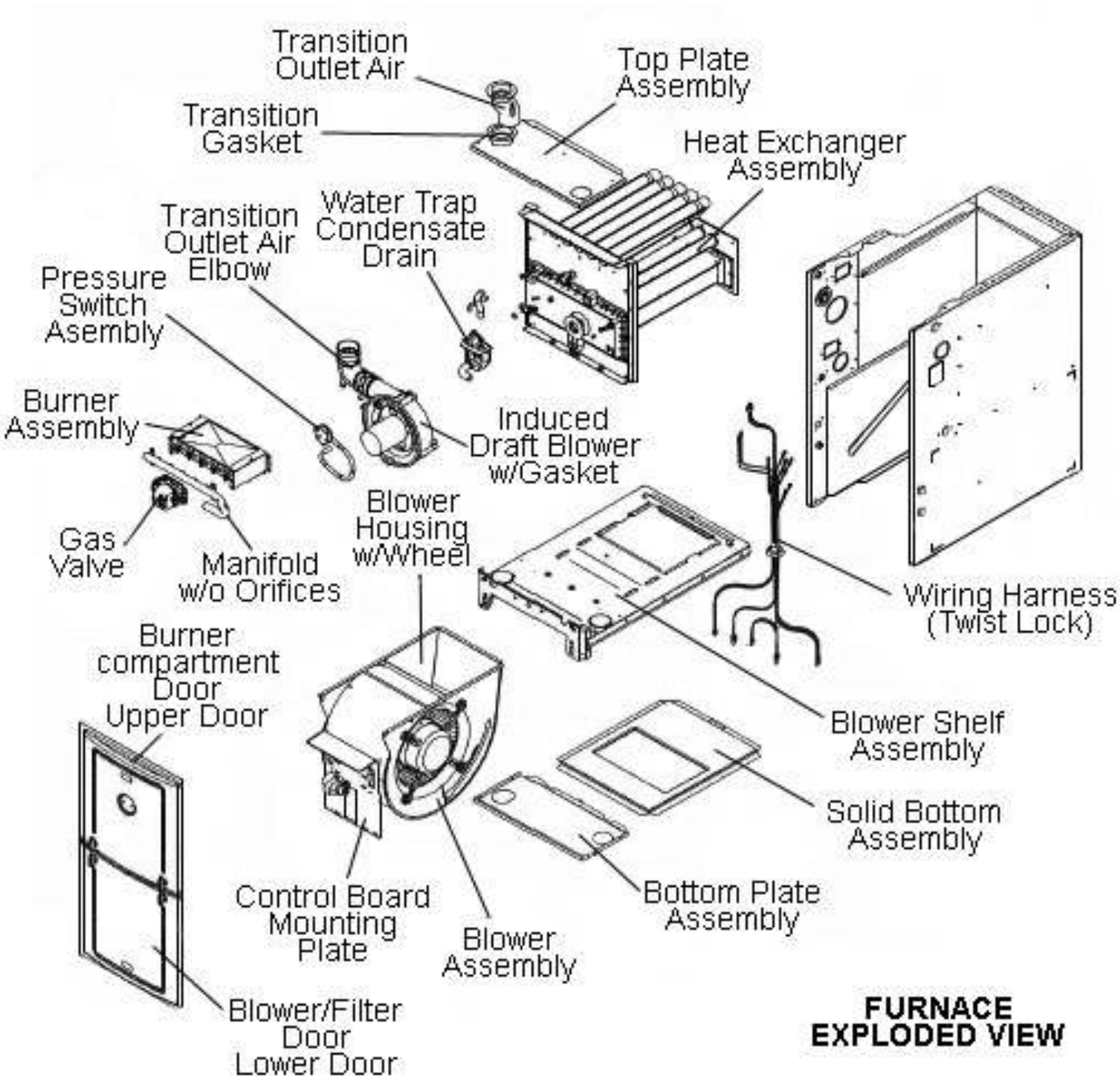

## R951T parts breakdown: Junction Box

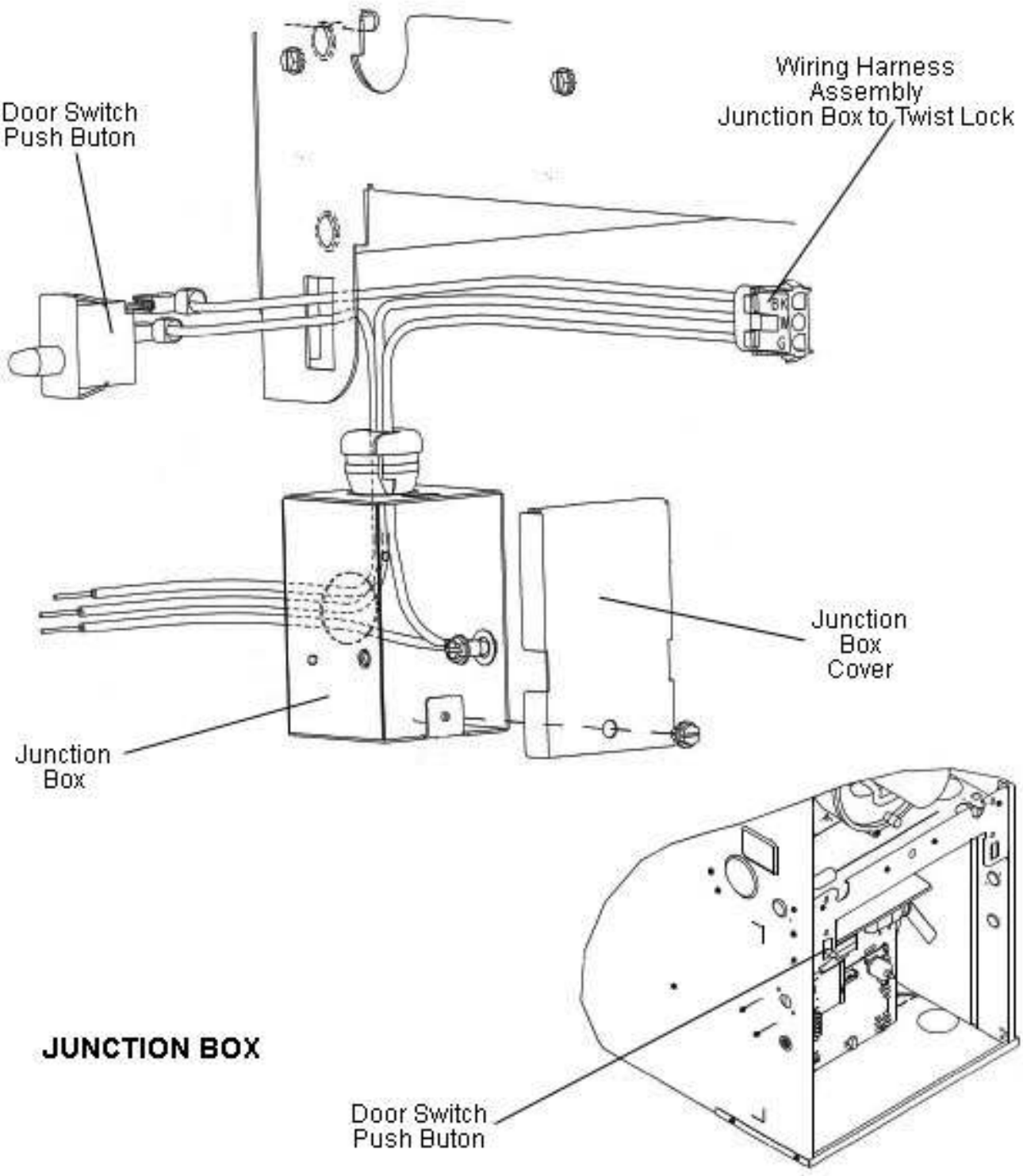

## R951T parts breakdown: Induced Draft Blower

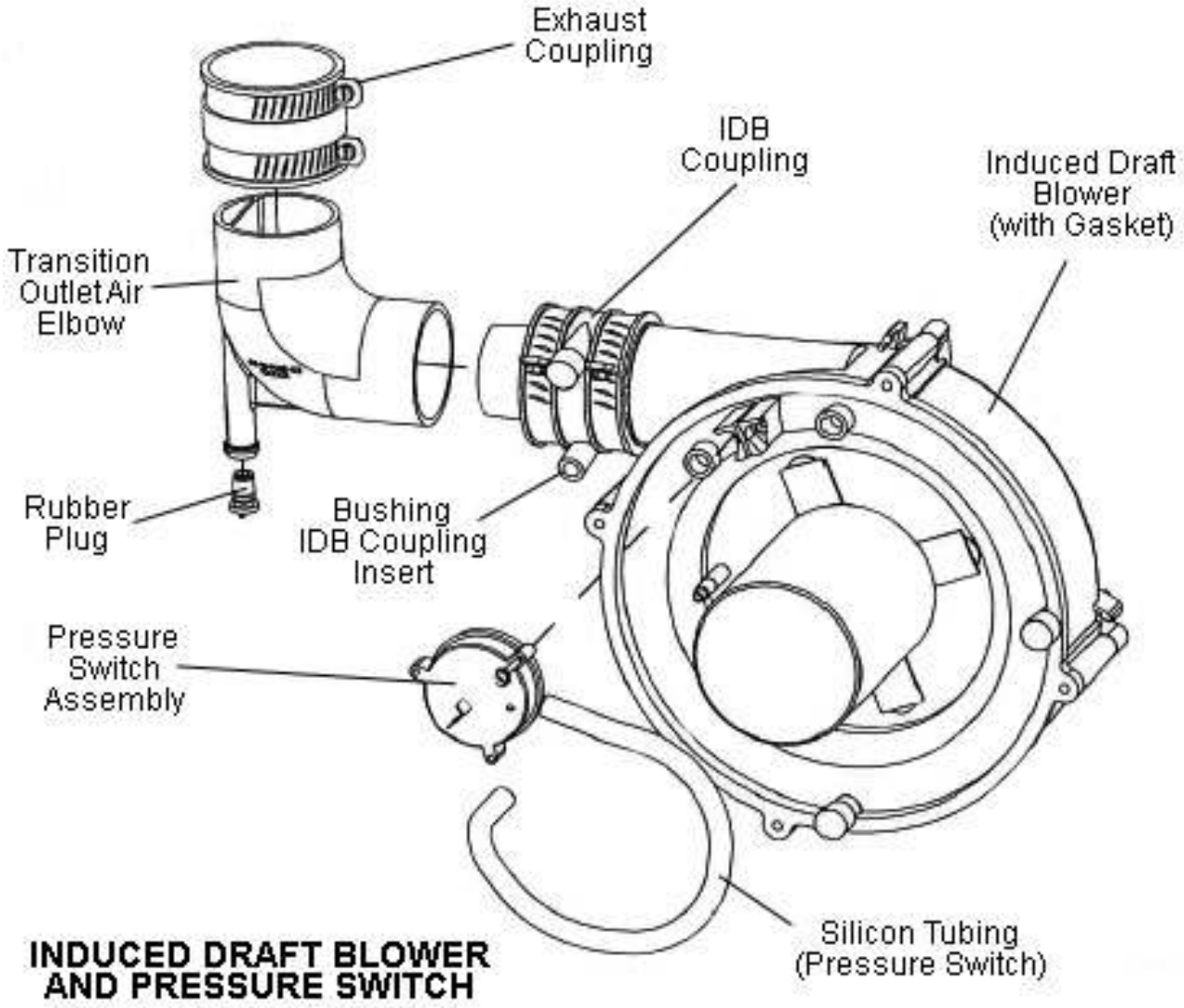

## R951T parts breakdown: Blower Assembly

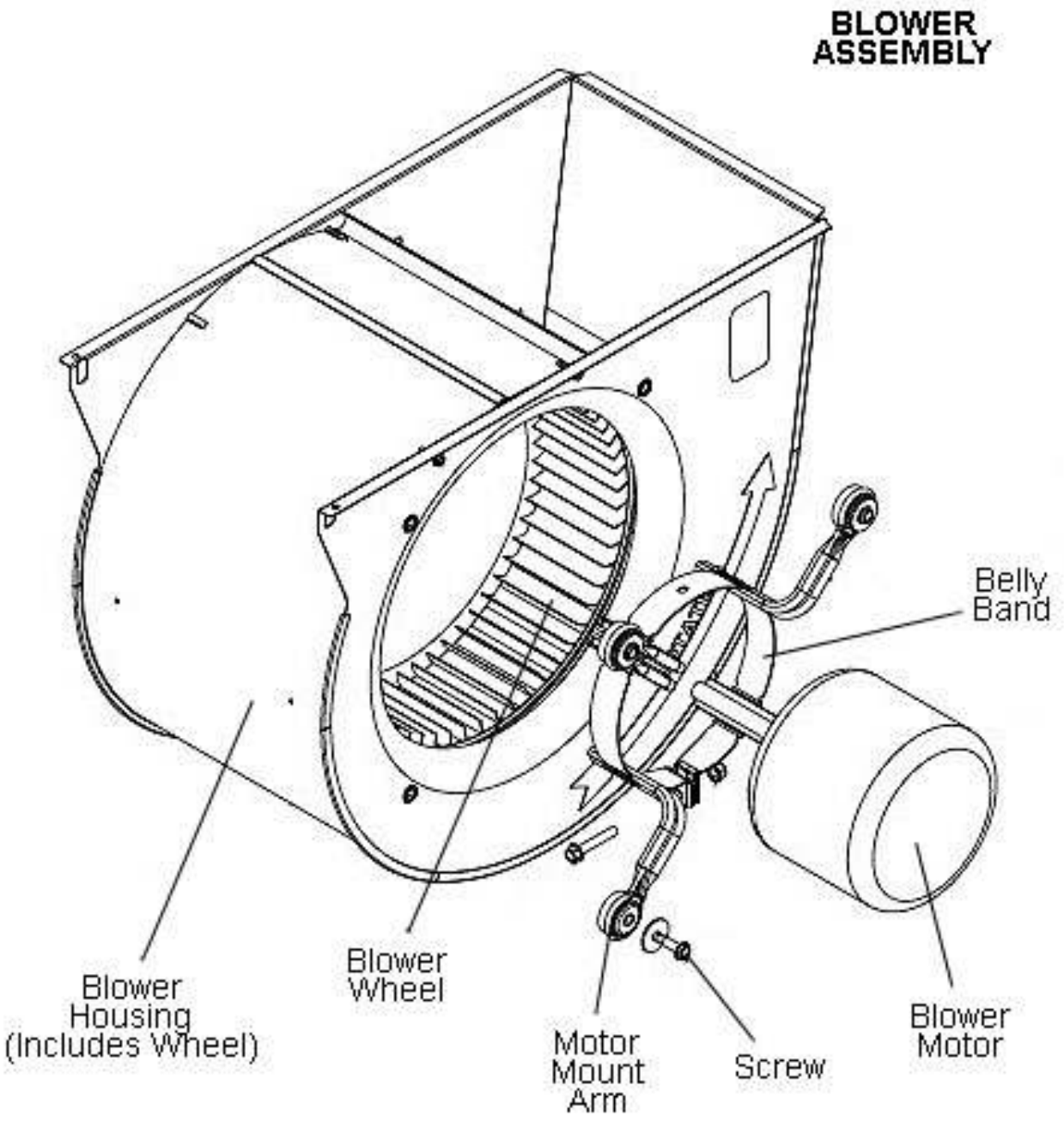

## R951T parts breakdown: Control Board Mounting

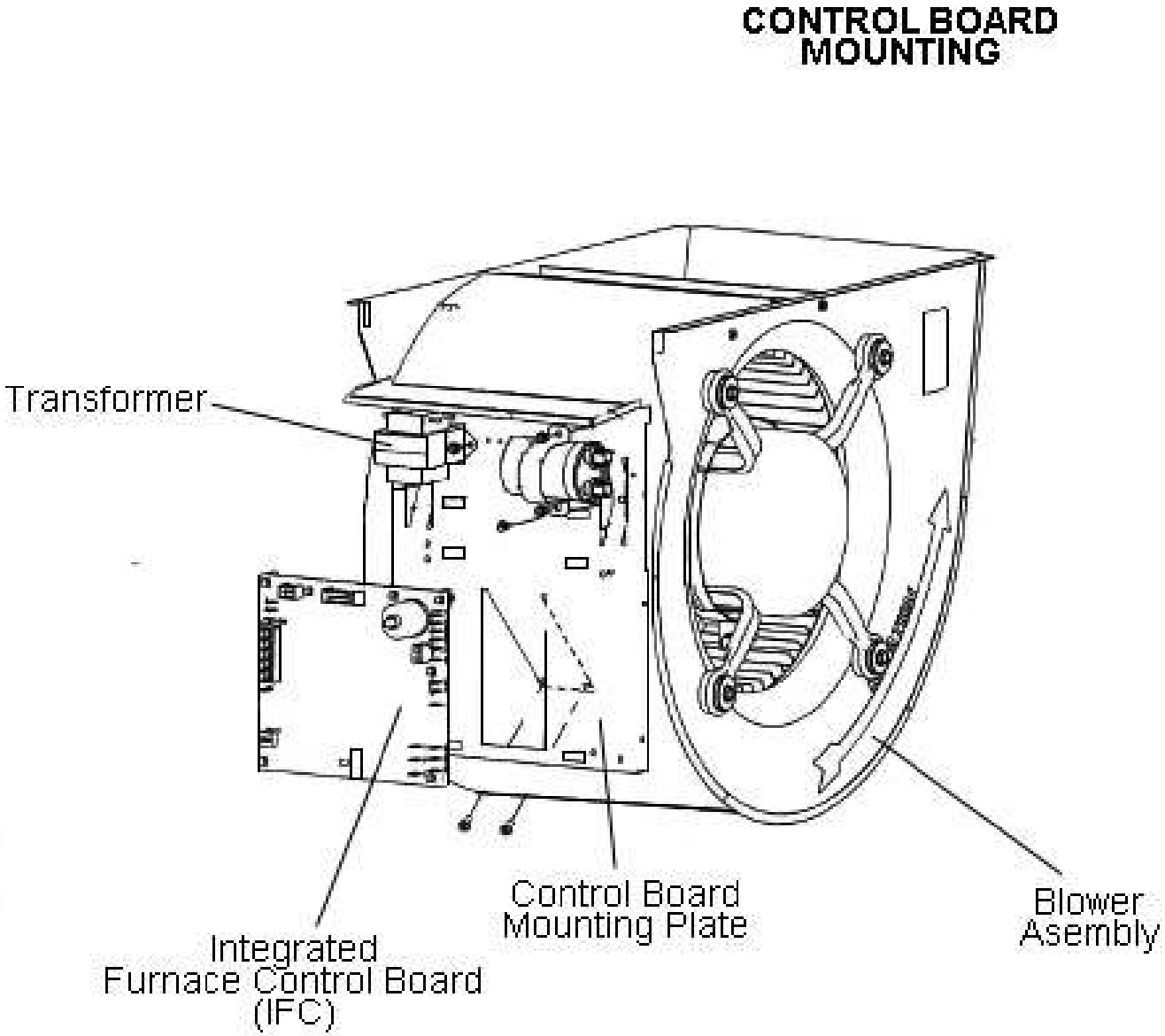

## R951T parts breakdown: Burner Assembly

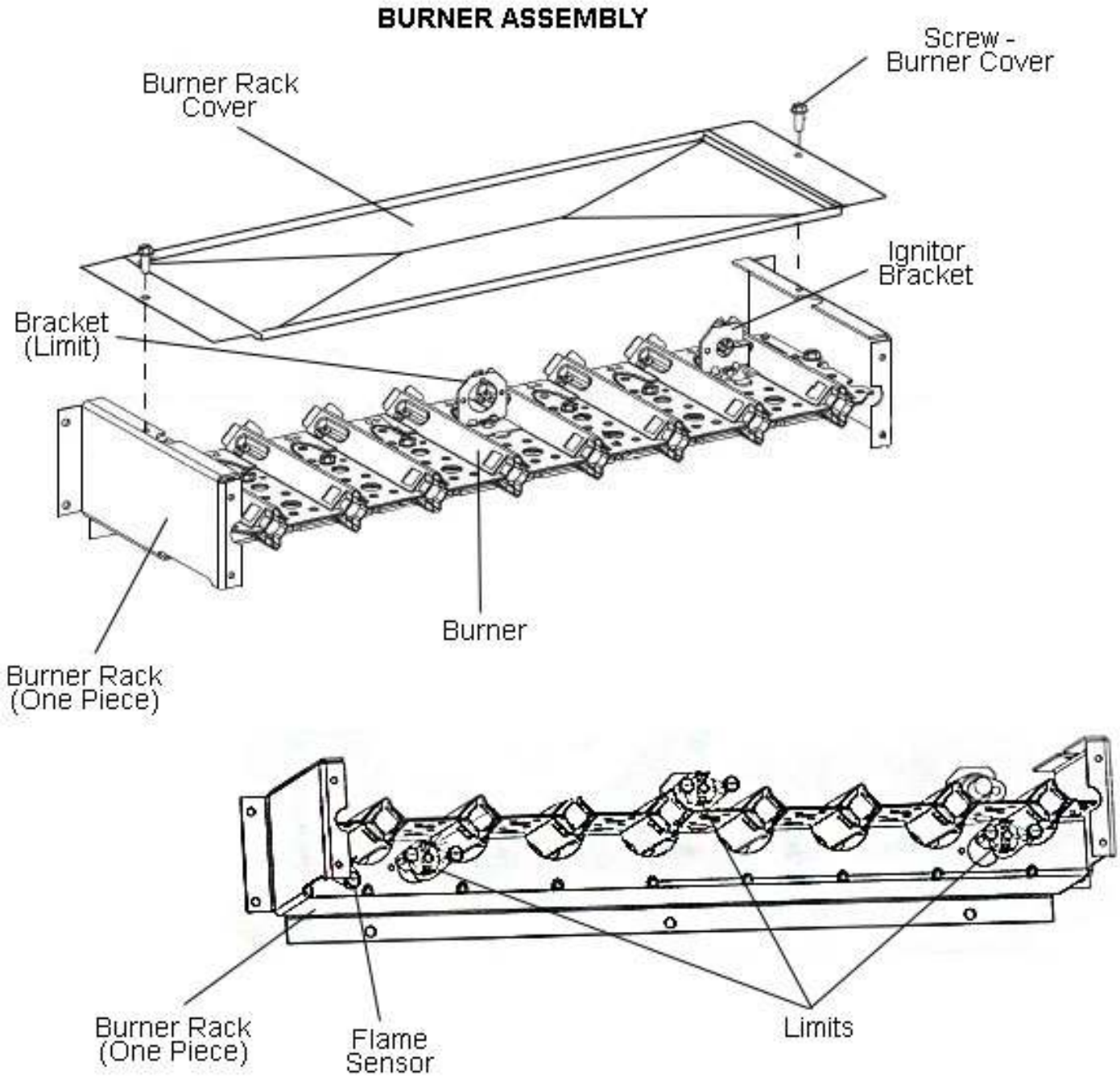

## R951T parts breakdown: Heat Exchanger - Collector Box

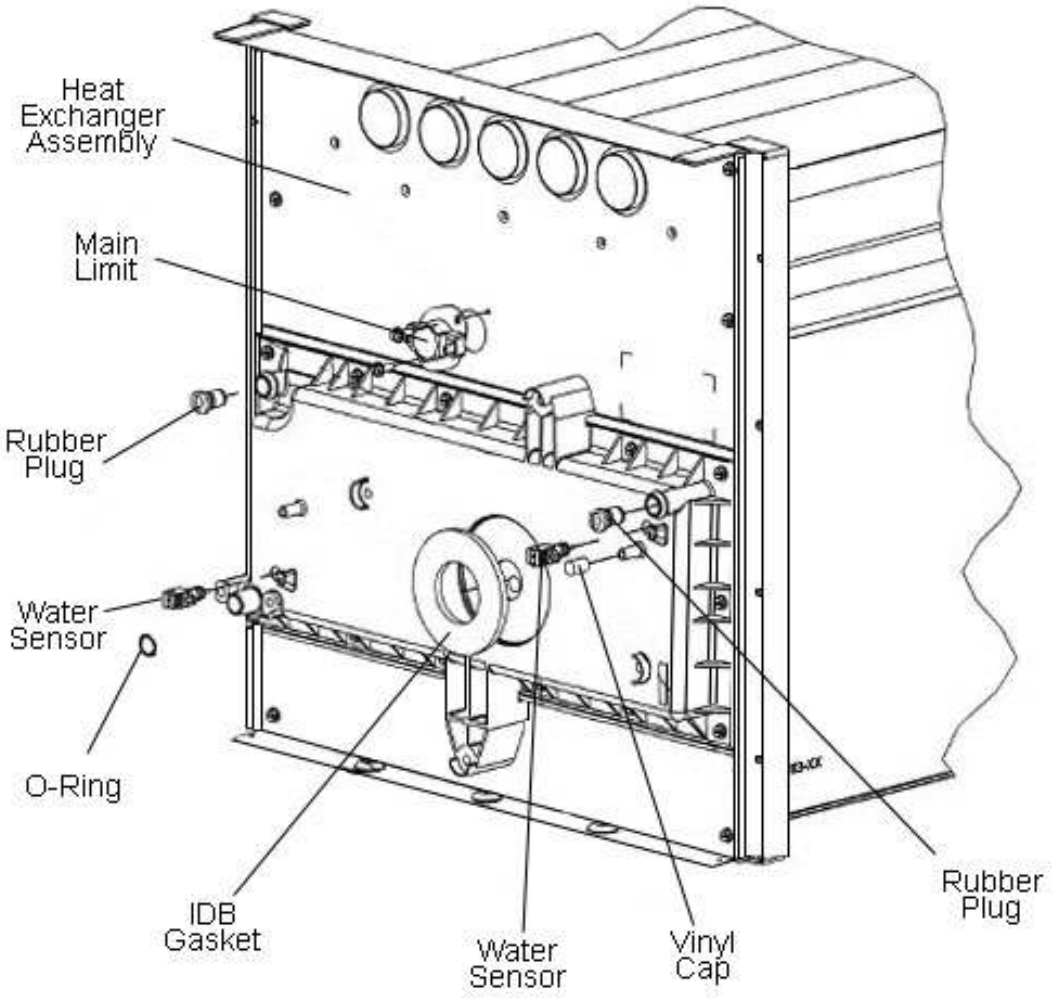


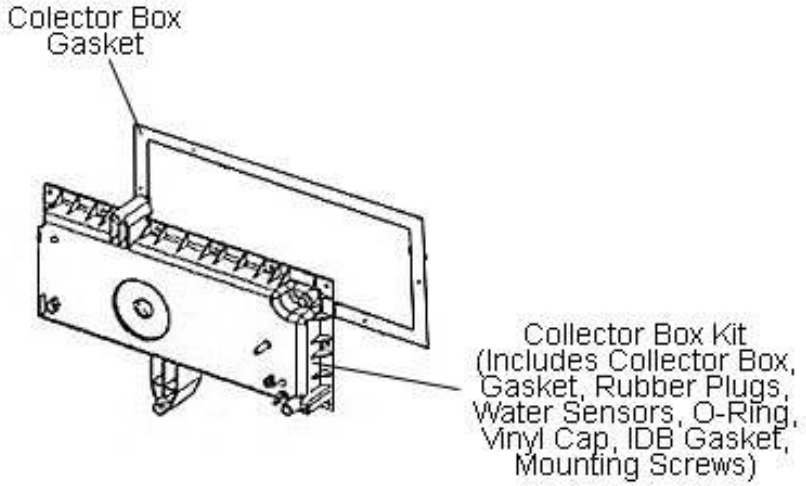

## R951T parts breakdown: Trap - Hose Assembly

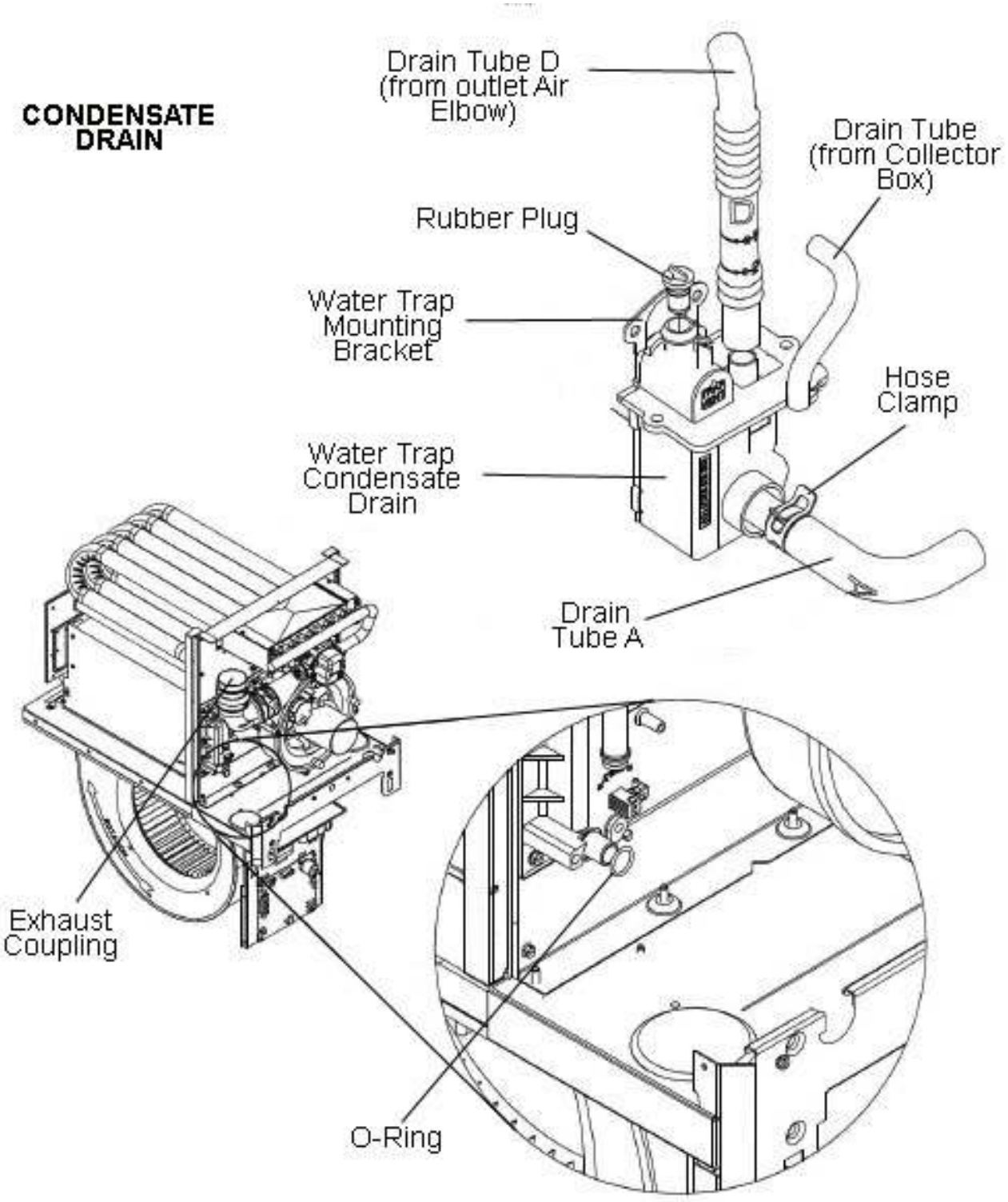

## Motors & fans

| Part No. | Description | Qty | Replaced By | Fits Models |
|---|---|---|---|---|
| **AS-105809-13** | Blower Assembly | 1 | | R951T0605A21M4SNAS, R951T0705A21M4SNAS (incl. variants) |
| **AS-105809-31** | Blower Assembly | 1 | | R951T0403A17M4SNAS (incl. variants) |
| **AS-105809-32** | Blower Assembly | 1 | | R951T0603A17M4SNAS (incl. variants) |
| **AS-105809-33** | Blower Assembly | 1 | | R951T0855A21M4SNAS (incl. variants) |
| **AS-105809-34** | Blower Assembly | 1 | | R951T1005A21M4SNAS (incl. variants) |
| **AS-105809-35** | Blower Assembly | 1 | | R951T1155A24M4SNAS (incl. variants) |
| **AS-105809-44** | Blower Assembly | 1 | | R951T0703A17M4SNAS (incl. variants) |
| **70-104182-20** | Blower Housing Assembly 11X6 CV | 1 | | R951T0403A14M4SNAS, R951T0403A14UDSNAS (incl. variants) |
| **70-104182-03** | Housing w/Blower Wheel | 1 | | R951T0403A17M4SNAS (incl. variants) |
| **70-104182-05** | Housing w/Blower Wheel | 1 | | R951T0603A17M4SNAS, R951T0703A17M4SNAS (incl. variants) |
| **70-104182-07** | Housing w/Blower Wheel | 1 | | R951T0605A21M4SNAS, R951T0705A21M4SNAS, R951T0855A21M4SNAS, R951T1005A21M4SNAS (incl. variants) |
| **70-104182-09** | Housing w/Blower Wheel | 1 | | R951T1155A24M4SNAS (incl. variants) |
| **70-110467-03** | Induced Draft - Broad Ocean Single Stage | 1 | | R951T0403A14UDSNAS (incl. variants) |
| **70-104157-82** | Induced Draft Blower w/Gasket | 1 | | R951T0403A17M4SNAS, R951T0603A17M4SNAS, R951T0605A21M4SNAS, R951T0703A17M4SNAS, R951T0705A21M4SNAS, R951T0855A21M4SNAS, R951T1005A21M4SNAS, R951T1155A24M4SNAS (incl. variants) |
| **51-106541-28** | Motor - SelecTech Gen 3 (115V - 1/2 hp) | 1 | | R951T0403A14M4SNAS, R951T0403A14UDSNAS (incl. variants) |
| **51-106543-07** | Motor - SelecTech Gen 3 (120V - 1 hp) | 1 | | R951T0605A21M4SNAS, R951T0705A21M4SNAS (incl. variants) |
| **51-106543-25** | Motor - SelecTech Gen 3 (120V - 1 hp) | 1 | | R951T0855A21M4SNAS (incl. variants) |
| **51-106543-26** | Motor - SelecTech Gen 3 (120V - 1 hp) | 1 | | R951T1005A21M4SNAS (incl. variants) |
| **51-106543-27** | Motor - SelecTech Gen 3 (120V - 1 hp) | 1 | | R951T1155A24M4SNAS (incl. variants) |
| **51-106543-00** | Motor - SelecTech Gen 3 (120V - 1 hp) - BLANK | 1 | | R951T0605A21M4SNAS, R951T0705A21M4SNAS, R951T0855A21M4SNAS, R951T1005A21M4SNAS, R951T1155A24M4SNAS (incl. variants) |
| **51-106541-17** | Motor - SelecTech Gen 3 (120V - 1/2 hp) | 1 | | R951T0603A17M4SNAS (incl. variants) |
| **51-106541-24** | Motor - SelecTech Gen 3 (120V - 1/2 hp) | 1 | | R951T0703A17M4SNAS (incl. variants) |
| **51-106541-25** | Motor - SelecTech Gen 3 (120V - 1/2 hp) | 1 | | R951T0403A17M4SNAS (incl. variants) |
| **51-106541-00** | Motor - SelecTech Gen 3 (120V - 1/2 hp) - BLANK | 1 | | R951T0403A14M4SNAS, R951T0403A14UDSNAS, R951T0403A17M4SNAS, R951T0603A17M4SNAS, R951T0703A17M4SNAS (incl. variants) |
| **70-19929-10** | Motor Mount Arm w/Grommet | 1 | | All models |
| **70-19927-04** | Motor Mount Band | 1 | | All models |

## Electrical

| Part No. | Description | Qty | Replaced By | Fits Models |
|---|---|---|---|---|
| **42-22692-09K** | Door Switch Kit | 1 | | R951T0403A14M4SNAS, R951T0403A14UDSNAS, R951T0605A21M4SNAS (incl. variants) |
| **62-105217-01** | Integrated Furnace Control Board (IFC) | 1 | | All models |
| **46-24124-06K** | Transformer Kit | 1 | | All models |
| **47-104184-01K** | Water Sensor Kit | 1 | | All models |
| **45-24371-58** | Wire Assembly | 1 | | All models |
| **45-50202-05-M9** | Wire Assembly - 14 in. Main Limit | 1 | | R951T0403A14UDSNAS (incl. variants) |
| **45-111045-01** | Wire Harness Assembly | 1 | | R951T0403A14UDSNAS (incl. variants) |
| **45-103551-01** | Wiring Harness | 1 | | All models |
| **45-105282-01** | Wiring Harness | 1 | | All models |
| **45-104090-01** | Wiring Harness Assembly (Twist-Lock) | 1 | | All models |

## Valves & switches

| Part No. | Description | Qty | Replaced By | Fits Models |
|---|---|---|---|---|
| **47-104465-03** | Limit Switch - Auto Reset (Flanged Airstream) | 1 | | R951T0403A14M4SNAS, R951T0403A14UDSNAS (incl. variants) |
| **47-22861-02** | Limit Switch - Manual Reset (Flanged Airstream) | 1 | | R951T0403A17M4SNAS, R951T0603A17M4SNAS, R951T0605A21M4SNAS, R951T0705A21M4SNAS, R951T0855A21M4SNAS, R951T1005A21M4SNAS, R951T1155A24M4SNAS (incl. variants) |
| **47-22861-04** | Limit Switch - Manual Reset (Flanged Airstream) | 1 | | R951T0403A14M4SNAS, R951T0403A14UDSNAS, R951T0703A17M4SNAS (incl. variants) |
| **47-104465-01K** | Limit Switch Kit - Auto Reset (Flanged Airstream) | 1 | | R951T0603A17M4SNAS, R951T0605A21M4SNAS, R951T0705A21M4SNAS, R951T0855A21M4SNAS, R951T1005A21M4SNAS (incl. variants) |
| **47-104465-02K** | Limit Switch Kit - Auto Reset (Flanged Airstream) | 1 | | R951T0403A17M4SNAS, R951T0703A17M4SNAS, R951T1155A24M4SNAS (incl. variants) |
| **42-105499-09** | Pressure Switch (-0.70") | 1 | | R951T1155A24M4SNAS (incl. variants) |
| **42-105499-06** | Pressure Switch (-0.80") | 1 | | R951T0403A17M4SNAS, R951T0603A17M4SNAS, R951T0605A21M4SNAS, R951T0703A17M4SNAS, R951T0705A21M4SNAS (incl. variants) |
| **42-105499-01** | Pressure Switch (-1.00") | 1 | | R951T0403A14UDSNAS, R951T0855A21M4SNAS (incl. variants) |
| **42-105499-04K** | Pressure Switch Kit (-0.60") | 1 | | R951T1005A21M4SNAS (incl. variants) |

## Gas

| Part No. | Description | Qty | Replaced By | Fits Models |
|---|---|---|---|---|
| **75-104227-07** | Burner Assembly | 1 | | R951T0403A14M4SNAS, R951T0403A14UDSNAS (incl. variants) |
| **AS-104123-41** | Burner Assembly - 3 Burner | 1 | | R951T0403A17M4SNAS (incl. variants) |
| **AS-104123-42** | Burner Assembly - 4 Burner | 1 | | R951T0603A17M4SNAS, R951T0605A21M4SNAS (incl. variants) |
| **AS-104123-43** | Burner Assembly - 5 Burner | 1 | | R951T0703A17M4SNAS, R951T0705A21M4SNAS (incl. variants) |
| **AS-104123-44** | Burner Assembly - 6 Burner | 1 | | R951T0855A21M4SNAS (incl. variants) |
| **AS-104123-45** | Burner Assembly - 7 Burner | 1 | | R951T1005A21M4SNAS (incl. variants) |
| **AS-104123-46** | Burner Assembly - 8 Burner | 1 | | R951T1155A24M4SNAS (incl. variants) |
| **AS-61984-13** | Burner Halves Assembly | 1 | | R951T0403A17M4SNAS (incl. variants) |
| **AS-61984-14** | Burner Halves Assembly | 1 | | R951T0603A17M4SNAS, R951T0605A21M4SNAS (incl. variants) |
| **AS-61984-15** | Burner Halves Assembly | 1 | | R951T0703A17M4SNAS, R951T0705A21M4SNAS (incl. variants) |
| **AS-61984-16** | Burner Halves Assembly | 1 | | R951T0855A21M4SNAS (incl. variants) |
| **AS-61984-17** | Burner Halves Assembly | 1 | | R951T1005A21M4SNAS (incl. variants) |
| **AS-61984-18** | Burner Halves Assembly | 1 | | R951T1155A24M4SNAS (incl. variants) |
| **62-23543-08K** | Flame Sensor Kit | 1 | | All models |
| **60-103901-01K** | Gas Valve Kit | 1 | | R951T0703A17M4SNAS, R951T0705A21M4SNAS, R951T1005A21M4SNAS, R951T1155A24M4SNAS (incl. variants) |
| **60-103901-02K** | Gas Valve Kit | 1 | | R951T0403A14M4SNAS (incl. variants) |
| **AS-104120-01** | Heat Exchanger Assembly | 1 | | R951T0403A17M4SNAS (incl. variants) |
| **AS-104120-02** | Heat Exchanger Assembly | 1 | | R951T0603A17M4SNAS (incl. variants) |
| **AS-104120-15** | Heat Exchanger Assembly | 1 | | R951T1005A21M4SNAS (incl. variants) |
| **AS-104120-17** | Heat Exchanger Assembly | 1 | | R951T0855A21M4SNAS (incl. variants) |
| **AS-104120-21** | Heat Exchanger Assembly | 1 | | R951T1155A24M4SNAS (incl. variants) |
| **AS-104120-24** | Heat Exchanger Assembly | 1 | | R951T0705A21M4SNAS (incl. variants) |
| **AS-104858-03** | Heat Exchanger Assembly | 1 | | R951T0703A17M4SNAS (incl. variants) |
| **62-24141-05K** | Ignitor Kit - Direct Spark Ignition (DSI) | 1 | | All models |
| **62-22175-51** | Orifice | 1 | | All models |
| **60-109385-01** | Single Stage Gas Valve - NG | 1 | | R951T0403A17M4SNAS, R951T0603A17M4SNAS, R951T0605A21M4SNAS, R951T0703A17M4SNAS, R951T0705A21M4SNAS, R951T0855A21M4SNAS (incl. variants) |

## Cabinet & hardware

| Part No. | Description | Qty | Replaced By | Fits Models |
|---|---|---|---|---|
| **63-106763-01** | Black Oxide Square Drive Screw, 8-18 x 1/2 in. | 1/2 | | All models |
| **63-106763-02** | Black Oxide Square Drive Screw, 8-18 x 1/4 in. | 1 | | All models |
| **AS-104135-01** | Blower Shelf Assembly | 1 | | R951T0603A17M4SNAS, R951T0703A17M4SNAS (incl. variants) |
| **AS-104135-02** | Blower Shelf Assembly | 1 | | R951T0605A21M4SNAS, R951T0705A21M4SNAS, R951T0855A21M4SNAS, R951T1005A21M4SNAS (incl. variants) |
| **AS-104135-03** | Blower Shelf Assembly | 1 | | R951T1155A24M4SNAS (incl. variants) |
| **AS-104135-04** | Blower Shelf Assembly | 1 | | R951T0403A17M4SNAS (incl. variants) |
| **AS-104043-02X** | Blower/Lower Door/Label Kit | 1 | | R951T0605A21M4SNAS, R951T0705A21M4SNAS, R951T0855A21M4SNAS, R951T1005A21M4SNAS (incl. variants) |
| **AS-104043-03X** | Blower/Lower Door/Label Kit | 1 | | R951T1155A24M4SNAS (incl. variants) |
| **63-19919-01** | Bolt, 1/4-20 x 1-1/2 in. | 1 | | All models |
| **AE-103585-01** | Bottom - Solid | 1 | | R951T0403A17M4SNAS, R951T0603A17M4SNAS, R951T0703A17M4SNAS (incl. variants) |
| **AE-103585-02** | Bottom - Solid | 1 | | R951T0605A21M4SNAS, R951T0705A21M4SNAS, R951T0855A21M4SNAS, R951T1005A21M4SNAS (incl. variants) |
| **AE-103585-03** | Bottom - Solid | 1 | | R951T1155A24M4SNAS (incl. variants) |
| **AE-103585-04** | Bottom - Solid | 1 | | R951T0403A14M4SNAS, R951T0403A14UDSNAS (incl. variants) |
| **AS-104314-01** | Bottom Plate Assembly | 1 | | R951T0403A17M4SNAS, R951T0603A17M4SNAS, R951T0703A17M4SNAS (incl. variants) |
| **AS-104314-02** | Bottom Plate Assembly | 1 | | R951T0605A21M4SNAS, R951T0705A21M4SNAS, R951T0855A21M4SNAS, R951T1005A21M4SNAS (incl. variants) |
| **AS-104314-03** | Bottom Plate Assembly | 1 | | R951T1155A24M4SNAS (incl. variants) |
| **AE-61913-02** | Bracket - Overtemperature Switch | 1 | | R951T1155A24M4SNAS (incl. variants) |
| **AE-104332-01** | Bracket Door Mounting | 1 | | R951T0403A17M4SNAS, R951T0603A17M4SNAS, R951T0703A17M4SNAS (incl. variants) |
| **AE-104332-02** | Bracket Door Mounting | 1 | | R951T0605A21M4SNAS, R951T0705A21M4SNAS, R951T0855A21M4SNAS, R951T1005A21M4SNAS (incl. variants) |
| **AE-104332-03** | Bracket Door Mounting | 1 | | R951T1155A24M4SNAS (incl. variants) |
| **AE-104332-04** | Bracket Door Mounting | 1 | | R951T0403A14M4SNAS, R951T0403A14UDSNAS (incl. variants) |
| **AS-104042-02** | Burner Compartment Door - Upper Door | 1 | | R951T0605A21M4SNAS, R951T0705A21M4SNAS, R951T0855A21M4SNAS, R951T1005A21M4SNAS (incl. variants) |
| **AE-104121-01** | Burner Rack | 1 | | R951T0403A14M4SNAS, R951T0403A14UDSNAS, R951T0403A17M4SNAS (incl. variants) |
| **AE-104121-02** | Burner Rack | 1 | | R951T0603A17M4SNAS, R951T0605A21M4SNAS (incl. variants) |
| **AE-104121-03** | Burner Rack | 1 | | R951T0703A17M4SNAS, R951T0705A21M4SNAS (incl. variants) |
| **AE-104121-04** | Burner Rack | 1 | | R951T0855A21M4SNAS (incl. variants) |
| **AE-104121-05** | Burner Rack | 1 | | R951T1005A21M4SNAS (incl. variants) |
| **AE-104121-06** | Burner Rack | 1 | | R951T1155A24M4SNAS (incl. variants) |
| **AE-104122-01** | Burner Rack Cover | 1 | | R951T0403A14M4SNAS, R951T0403A14UDSNAS, R951T0403A17M4SNAS (incl. variants) |
| **AE-104122-02** | Burner Rack Cover | 1 | | R951T0603A17M4SNAS, R951T0605A21M4SNAS (incl. variants) |
| **AE-104122-03** | Burner Rack Cover | 1 | | R951T0703A17M4SNAS, R951T0705A21M4SNAS (incl. variants) |
| **AE-104122-04** | Burner Rack Cover | 1 | | R951T0855A21M4SNAS (incl. variants) |
| **AE-104122-05** | Burner Rack Cover | 1 | | R951T1005A21M4SNAS (incl. variants) |
| **AE-104122-06** | Burner Rack Cover | 1 | | R951T1155A24M4SNAS (incl. variants) |
| **AS-104042-03X** | Burner/Upper Door/Label Kit | 1 | | R951T1155A24M4SNAS (incl. variants) |
| **45-17055-13** | Bushing - Strain Relief | 1 | | All models |

| Part No. | Description | Qty | Replaced By | Fits Models |
|---|---|---|---|---|
| **64-103686-03** | Clamp - Wire Hose | 1 | | All models |
| **68-104111-11** | Collector Box | 1 | | R951T0705A21M4SNAS (incl. variants) |
| **68-110928-01** | Collector Box - 14 in. Wide - 0.92 in. Choke | 1 | | R951T0403A14M4SNAS, R951T0403A14UDSNAS (incl. variants) |
| **68-103546-01** | Collector Box Gasket | 1 | | R951T1155A24M4SNAS (incl. variants) |
| **68-103546-02** | Collector Box Gasket | 1 | | R951T0605A21M4SNAS, R951T0705A21M4SNAS, R951T0855A21M4SNAS, R951T1005A21M4SNAS (incl. variants) |
| **68-103546-03** | Collector Box Gasket | 1 | | R951T0403A17M4SNAS, R951T0603A17M4SNAS, R951T0703A17M4SNAS (incl. variants) |
| **68-104111-81** | Collector Box Kit | 1 | | R951T0403A17M4SNAS (incl. variants) |
| **68-104111-82** | Collector Box Kit | 1 | | R951T1005A21M4SNAS (incl. variants) |
| **68-104111-83** | Collector Box Kit | 1 | | R951T1155A24M4SNAS (incl. variants) |
| **68-104111-84** | Collector Box Kit | 1 | | R951T0603A17M4SNAS (incl. variants) |
| **68-104111-85** | Collector Box Kit | 1 | | R951T0703A17M4SNAS (incl. variants) |
| **68-104111-86** | Collector Box Kit | 1 | | R951T0855A21M4SNAS (incl. variants) |
| **AE-103589-01** | Control Board Mounting Plate | 1 | | All models |
| **68-104374-34** | Door Filler (Gray) - 14.0 in. | 1 | | R951T0403A14M4SNAS, R951T0403A14UDSNAS (incl. variants) |
| **68-104374-31** | Door Filler (Gray) - 17.5 in. | 1 | | R951T0403A17M4SNAS, R951T0603A17M4SNAS, R951T0703A17M4SNAS (incl. variants) |
| **68-104374-32** | Door Filler (Gray) - 21.0 in. | 1 | | R951T0605A21M4SNAS, R951T0705A21M4SNAS, R951T0855A21M4SNAS, R951T1005A21M4SNAS (incl. variants) |
| **68-104374-33** | Door Filler (Gray) - 24.5 in. | 1 | | R951T1155A24M4SNAS (incl. variants) |
| **79-104393-01** | Drain Tube | 1 | | R951T0403A14M4SNAS, R951T0403A14UDSNAS, R951T0605A21M4SNAS (incl. variants) |
| **79-104394-01** | Drain Tube | 1 | | R951T0403A14M4SNAS, R951T0403A14UDSNAS, R951T0605A21M4SNAS (incl. variants) |
| **79-107210-01** | EPDM Rubber Tubing (Bulk - Non-Salable) | 1 | | All models |
| **68-104146-04** | Exhaust Coupling | 1 | | R951T0605A21M4SNAS (incl. variants) |
| **68-104146-05** | Exhaust Coupling | 1 | | R951T0403A14M4SNAS, R951T0403A14UDSNAS (incl. variants) |
| **68-103547-04** | Gasket (Center Panel/Front Plate) | 1 | | R951T0403A14M4SNAS, R951T0403A14UDSNAS (incl. variants) |
| **68-103546-04** | Gasket (Collector Box/Front Plate) | 1 | | R951T0403A14M4SNAS, R951T0403A14UDSNAS (incl. variants) |
| **68-104413-01** | Gasket - 25 ft. | 3 | | All models |
| **68-104382-04** | Gasket - Blower Shelf | 1 | | R951T0403A14M4SNAS, R951T0403A14UDSNAS (incl. variants) |
| **68-104382-01** | Gasket - Blower Shelf (17.5 in.) | 1 | | R951T0403A17M4SNAS, R951T0603A17M4SNAS, R951T0703A17M4SNAS (incl. variants) |
| **68-104382-02** | Gasket - Blower Shelf (21 in.) | 1 | | R951T0605A21M4SNAS, R951T0705A21M4SNAS, R951T0855A21M4SNAS, R951T1005A21M4SNAS (incl. variants) |
| **68-104382-03** | Gasket - Blower Shelf (24.5 in.) | 1 | | R951T1155A24M4SNAS (incl. variants) |
| **68-104151-01** | Gasket - Condensate Trap | 1 | | |
| **AE-61951-53** | Gasket - Door | 1 | | R951T0403A14M4SNAS, R951T0403A14UDSNAS (incl. variants) |
| **AE-61951-54** | Gasket - Door (17.5 in.) | 1 | | R951T0403A17M4SNAS, R951T0603A17M4SNAS, R951T0703A17M4SNAS (incl. variants) |
| **AE-61951-55** | Gasket - Door (21 in.) | 1 | | R951T0605A21M4SNAS, R951T0705A21M4SNAS, R951T0855A21M4SNAS, R951T1005A21M4SNAS (incl. variants) |
| **AE-61951-56** | Gasket - Door (24.5 in.) | 1 | | R951T1155A24M4SNAS (incl. variants) |
| **68-104125-04** | Gasket - Graphite 14.0 Coil/Transition | 1 | | R951T0403A14M4SNAS, R951T0403A14UDSNAS (incl. variants) |
| **68-104126-04** | Gasket - Graphite 14.0 Trans Back/Front | 1 | | R951T0403A14M4SNAS, R951T0403A14UDSNAS (incl. variants) |
| **68-104152-01** | Gasket - Induced Draft Blower | 1 | | All models |

| Part No. | Description | Qty | Replaced By | Fits Models |
|---|---|---|---|---|
| **68-22079-03** | Gasket - Neoprene (1/16 in. x 3/4 in.) | 1 | OBSOLETE | R951T0403A17M4SNAS, R951T0603A17M4SNAS, R951T0605A21M4SNAS, R951T0703A17M4SNAS, R951T0705A21M4SNAS, R951T0855A21M4SNAS, R951T1005A21M4SNAS, R951T1155A24M4SNAS (incl. variants) |
| **68-22079-85** | Gasket - Neoprene (1/8 in. x 3/4 in.) - 100 ft. Roll | 2 | | All models |
| **56-22114-06** | Grommet - Gas Pipe | 1 | | All models |
| **63-17189-03** | Hex Nut, 1/4-20, w/External Tooth Lock Washer | 1 | | All models |
| **10-61885-03** | Ignitor Bracket | 1 | | R951T0403A14M4SNAS, R951T0403A14UDSNAS (incl. variants) |
| **AE-61885-02** | Ignitor Bracket | 1 | | R951T0403A17M4SNAS, R951T0603A17M4SNAS, R951T0605A21M4SNAS, R951T0703A17M4SNAS, R951T0705A21M4SNAS, R951T0855A21M4SNAS, R951T1005A21M4SNAS, R951T1155A24M4SNAS (incl. variants) |
| **68-103536-01** | Insulation - Foil Back | 1 | | R951T0403A17M4SNAS, R951T0603A17M4SNAS, R951T0703A17M4SNAS (incl. variants) |
| **68-103536-02** | Insulation - Foil Back | 1 | | R951T0605A21M4SNAS, R951T0705A21M4SNAS, R951T0855A21M4SNAS, R951T1005A21M4SNAS (incl. variants) |
| **68-103536-03** | Insulation - Foil Back | 1 | | R951T1155A24M4SNAS (incl. variants) |
| **68-103536-04** | Insulation - Foil Black | 1 | | R951T0403A14M4SNAS, R951T0403A14UDSNAS (incl. variants) |
| **68-103537-01** | Insulation - Sound | 1 | | R951T0403A17M4SNAS, R951T0603A17M4SNAS, R951T0703A17M4SNAS (incl. variants) |
| **68-103537-02** | Insulation - Sound | 1 | | R951T0605A21M4SNAS, R951T0705A21M4SNAS, R951T0855A21M4SNAS, R951T1005A21M4SNAS (incl. variants) |
| **68-103537-03** | Insulation - Sound | 1 | | R951T1155A24M4SNAS (incl. variants) |
| **68-103537-04** | Insulation - Sound | 1 | | R951T0403A14M4SNAS, R951T0403A14UDSNAS (incl. variants) |
| **68-103535-09** | Insulation - Top Plate 14.0 | 1 | | R951T0403A14M4SNAS, R951T0403A14UDSNAS (incl. variants) |
| **AE-67925-01** | Insulation Retainer | 1 | | All models |
| **AE-61475-03** | Junction Box | 1 | | All models |
| **AE-61476-03** | Juncton Box Cover | 1 | | All models |
| **PD644035** | Latch & Handle Kit - Gas Furnace (Gray) | 1 | | |
| **64-104352-01** | Latch Cam | 1 | | All models |
| **64-104351-03** | Latch Handle/Stud (Gray) | 1 | | All models |
| **AE-104192-01** | Left Jacket Baffle | 1 | | R951T0703A17M4SNAS, R951T1005A21M4SNAS (incl. variants) |
| **AE-104192-02** | Left Jacket Baffle | 1 | | R951T0403A17M4SNAS (incl. variants) |
| **AE-104192-03** | Left Jacket Baffle | 1 | | R951T0603A17M4SNAS, R951T0705A21M4SNAS (incl. variants) |
| **AE-104192-04** | Left Jacket Baffle | 1 | | R951T0855A21M4SNAS (incl. variants) |
| **AE-104192-06** | Left Jacket Baffle | 1 | | R951T1155A24M4SNAS (incl. variants) |
| **63-101978-01** | Machine Screw, 1/4-20 x 1 in. | 1 | | All models |
| **81-104526-01** | Manifold | 1 | | R951T0403A17M4SNAS (incl. variants) |
| **81-104526-02** | Manifold | 1 | | R951T0603A17M4SNAS, R951T0605A21M4SNAS (incl. variants) |
| **81-104526-03** | Manifold | 1 | | R951T0703A17M4SNAS, R951T0705A21M4SNAS (incl. variants) |
| **81-104526-04** | Manifold | 1 | | R951T0855A21M4SNAS (incl. variants) |
| **81-104526-05** | Manifold | 1 | | R951T1005A21M4SNAS (incl. variants) |
| **81-104526-06** | Manifold | 1 | | R951T1155A24M4SNAS (incl. variants) |
| **81-104526-08** | Manifold (90+) - 3 Cells | 1 | | R951T0403A14M4SNAS, R951T0403A14UDSNAS (incl. variants) |
| **68-104386-02** | O-Ring | 1 | | All models |
| **AS-104042-01X** | Panel/Label Kit | 1 | | R951T0403A17M4SNAS, R951T0603A17M4SNAS, R951T0703A17M4SNAS (incl. variants) |

| Part No. | Description | Qty | Replaced By | Fits Models |
|---|---|---|---|---|
| **AS-104043-01X** | Panel/Label Kit | 1 | | R951T0403A17M4SNAS, R951T0603A17M4SNAS, R951T0703A17M4SNAS (incl. variants) |
| **68-104446-01** | Parts Bag | 1 | | All models |
| **AE-104190-01** | Rear Jacket Baffle | 1 | | R951T0403A17M4SNAS, R951T0603A17M4SNAS, R951T0703A17M4SNAS (incl. variants) |
| **AE-104190-02** | Rear Jacket Baffle | 1 | | R951T0605A21M4SNAS, R951T0705A21M4SNAS, R951T0855A21M4SNAS, R951T1005A21M4SNAS (incl. variants) |
| **AE-104190-03** | Rear Jacket Baffle | 1 | | R951T1155A24M4SNAS (incl. variants) |
| **45-104315-01** | Rectangular Flush Mount Plug | 1 | | All models |
| **AE-104191-01** | Right Jacket Baffle | 1 | | R951T0703A17M4SNAS, R951T1005A21M4SNAS (incl. variants) |
| **AE-104191-02** | Right Jacket Baffle | 1 | | R951T0403A17M4SNAS (incl. variants) |
| **AE-104191-03** | Right Jacket Baffle | 1 | | R951T0603A17M4SNAS (incl. variants) |
| **AE-104191-04** | Right Jacket Baffle | 1 | | R951T0705A21M4SNAS, R951T0855A21M4SNAS (incl. variants) |
| **AE-104191-06** | Right Jacket Baffle | 1 | | R951T1155A24M4SNAS (incl. variants) |
| **45-103596-01** | Round Flush Mount Plug | 1 | | All models |
| **45-103596-03** | Round Flush Mount Plug | 1 | | All models |
| **45-103596-04** | Round Flush Mount Plug | 1 | | All models |
| **45-103596-06** | Round Flush Mount Plug | 1 | | All models |
| **56-104377-01** | Rubber Plug | 1 | | R951T0403A14M4SNAS, R951T0403A14UDSNAS, R951T0605A21M4SNAS (incl. variants) |
| **63-104375-08** | Screw - Hex Head - 8-32 x 1 in. Machine Thread | 1 | | R951T0403A14M4SNAS, R951T0403A14UDSNAS (incl. variants) |
| **63-103934-02** | Screw - Plastic Threading Hex Head (8-18 x .375) | 1 | | All models |
| **63-104375-02** | Screw - Sheet Metal - 8-32 x 0.4 in. | 1 | | All models |
| **63-104523-01** | Screw - Sheet Metal - 8-32 x 1/2 in. | 4/5/6 | | All models |
| **63-104375-01** | Screw - Sheet Metal - 8-32 x 3.3 in. | 1/2 | | R951T0403A17M4SNAS, R951T0603A17M4SNAS, R951T0605A21M4SNAS, R951T0703A17M4SNAS, R951T0705A21M4SNAS, R951T0855A21M4SNAS, R951T1005A21M4SNAS, R951T1155A24M4SNAS (incl. variants) |
| **63-22153-11** | Screws - Sheet Metal. 8-18 x 3/4 in. | 2/3 | | All models |
| **67-24036-01** | Sealant | 1 | | All models |
| **63-106762-01** | Sheet Metal Screw - Jacket Trim Head Thread Point | 1 | | All models |
| **63-22338-02** | Sheet Metal Screw, 6-20 x 1/4 in. | 1 | | All models |
| **63-22153-05** | Sheet Metal Screw, 8-18 x 3/8 in. | 1/2 | | All models |
| **63-24368-03** | Sheet Metal Screw, 8-18 x 1/2 in. | 1 | | All models |
| **63-24368-01** | Sheet Metal Screw, 8-18 x 1/4 in. | 1/2/3 | | All models |
| **68-21893-04** | Sight Glass | 1 | | All models |
| **45-18515-01** | Snap-In Bushing - Conductor Protection | 1 | | All models |
| **63-22429-01** | Stainless Steel Sheet Metal Screw, 8-18 x 1/2 in. | 1/2/4 | | All models |
| **AE-61951-51** | Stripping - Cut Length | 1 | | All models |
| **AE-104127-01** | Support - Heat Exchanger | 1 | | R951T0403A17M4SNAS, R951T0603A17M4SNAS, R951T0703A17M4SNAS (incl. variants) |
| **AE-104127-02** | Support - Heat Exchanger | 1 | | R951T0605A21M4SNAS, R951T0705A21M4SNAS, R951T0855A21M4SNAS, R951T1005A21M4SNAS (incl. variants) |
| **AE-104127-03** | Support - Heat Exchanger | 1 | | R951T1155A24M4SNAS (incl. variants) |
| **42-22692-13** | Switch - Push Button | 1 | | R951T0403A17M4SNAS, R951T0603A17M4SNAS, R951T0703A17M4SNAS, R951T0705A21M4SNAS, R951T0855A21M4SNAS, R951T1005A21M4SNAS, R951T1155A24M4SNAS (incl. variants) |
| **AS-104134-01** | Top Plate Assembly | 1 | | R951T0403A17M4SNAS, R951T0603A17M4SNAS, R951T0703A17M4SNAS (incl. variants) |

| Part No. | Description | Qty | Replaced By | Fits Models |
|---|---|---|---|---|
| **AS-104134-02** | Top Plate Assembly | 1 | | R951T0605A21M4SNAS, R951T0705A21M4SNAS, R951T0855A21M4SNAS, R951T1005A21M4SNAS (incl. variants) |
| **AS-104134-03** | Top Plate Assembly | 1 | | R951T1155A24M4SNAS (incl. variants) |
| **68-104145-04** | Transition - Elbow - Outlet Air Upflow | 1 | | R951T0403A14M4SNAS, R951T0403A14UDSNAS (incl. variants) |
| **68-24022-03** | Transition - Gasket | 1 | | All models |
| **68-104133-02** | Transition - Outlet Air | 1 | | R951T0403A17M4SNAS, R951T0603A17M4SNAS, R951T0605A21M4SNAS, R951T0703A17M4SNAS, R951T0705A21M4SNAS, R951T0855A21M4SNAS, R951T1005A21M4SNAS, R951T1155A24M4SNAS (incl. variants) |
| **68-104145-03** | Transition - Outlet Air Elbow | 1 | | R951T0403A17M4SNAS, R951T0603A17M4SNAS, R951T0605A21M4SNAS, R951T0703A17M4SNAS, R951T0705A21M4SNAS, R951T0855A21M4SNAS, R951T1005A21M4SNAS, R951T1155A24M4SNAS (incl. variants) |
| **68-104133-06** | Transition - Outlet Air Upflow | 1 | | R951T0403A14M4SNAS, R951T0403A14UDSNAS (incl. variants) |
| **56-103685-01** | Vinyl Cap | 1 | | All models |
| **63-26198-02** | Washer - Flat (Fender) | 1 | | All models |
| **68-104346-01K** | Water Trap Kit - Condensate Drain | 1 | | All models |
| **AE-104385-01** | Water Trap Mounting Bracket | 1 | | All models |
| **64-17606-01** | Wire & Cable Tie - Nylon Black - 8 in. | 1 | | All models |