Rheem R951V Gas Furnace Replacement Parts List

Parts list RP-RHM-R951V | Updated Nov 2026 | 300 parts | 30 model numbers

Genuine Rheem OEM part numbers for the models listed below, compiled from Rheem Manufacturing's service parts catalog. Quantities are per unit. Where Rheem has replaced a part number, the current number is shown under Replaced By. Always confirm the full model and serial number of the unit before ordering.

Models covered

R951V0403A14M4SCAP, R951V0403A14M4SCAPRHC, R951V0403A14UDSCAP, R951V0403A14UDSCAPRHC, R951V0403A17M4SCAP, R951V0403A17M4SCAPRHC, R951V0403A17M4UCAP, R951V0403A17UHUCAP, R951V0603A17M4SCAP, R951V0603A17M4SCAPRHC, R951V0603A17M4UCAP, R951V0603A17UHUCAP, R951V0605A21M4SCAP, R951V0605A21M4SCAPRHC, R951V0703A17M4SCAP, R951V0703A17M4SCAPRHC, R951V0705A21M4SCAP, R951V0705A21M4SCAPRHC, R951V0705A21M4UCAP, R951V0705A21UHUCAP, R951V0855A21M4SCAP, R951V0855A21M4SCAPRHC, R951V0855B21M4SCAP, R951V0855B21M4SCAPRHC, R951V1005A21M4SCAP, R951V1005A21M4SCAPRHC, R951V1005A21M4UCAP, R951V1005A21UHUCAP, R951V1155A24M4SCAP, R951V1155A24M4SCAPRHC

R951V parts breakdown: Exploded View

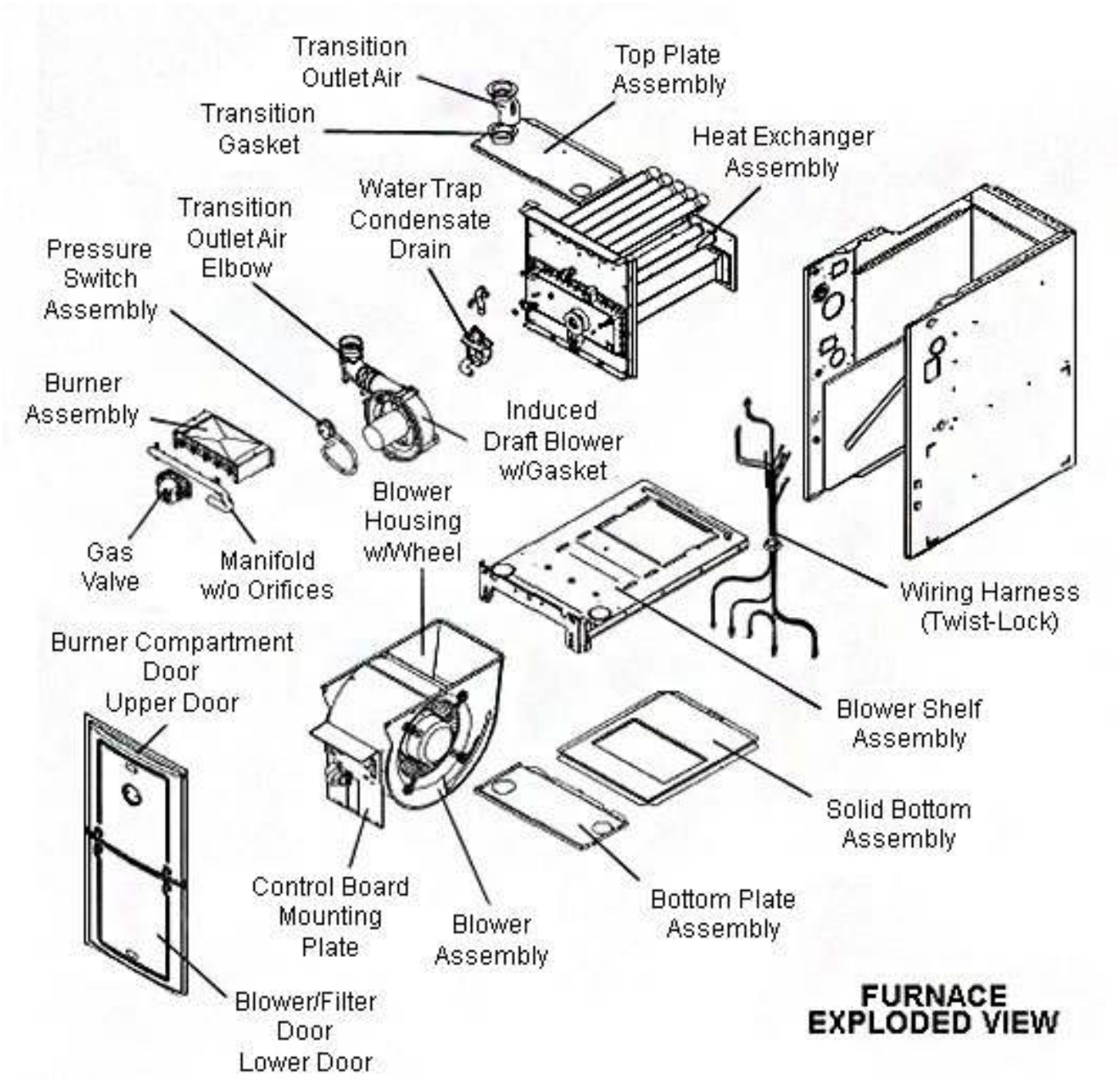

R951V parts breakdown: Exploded View

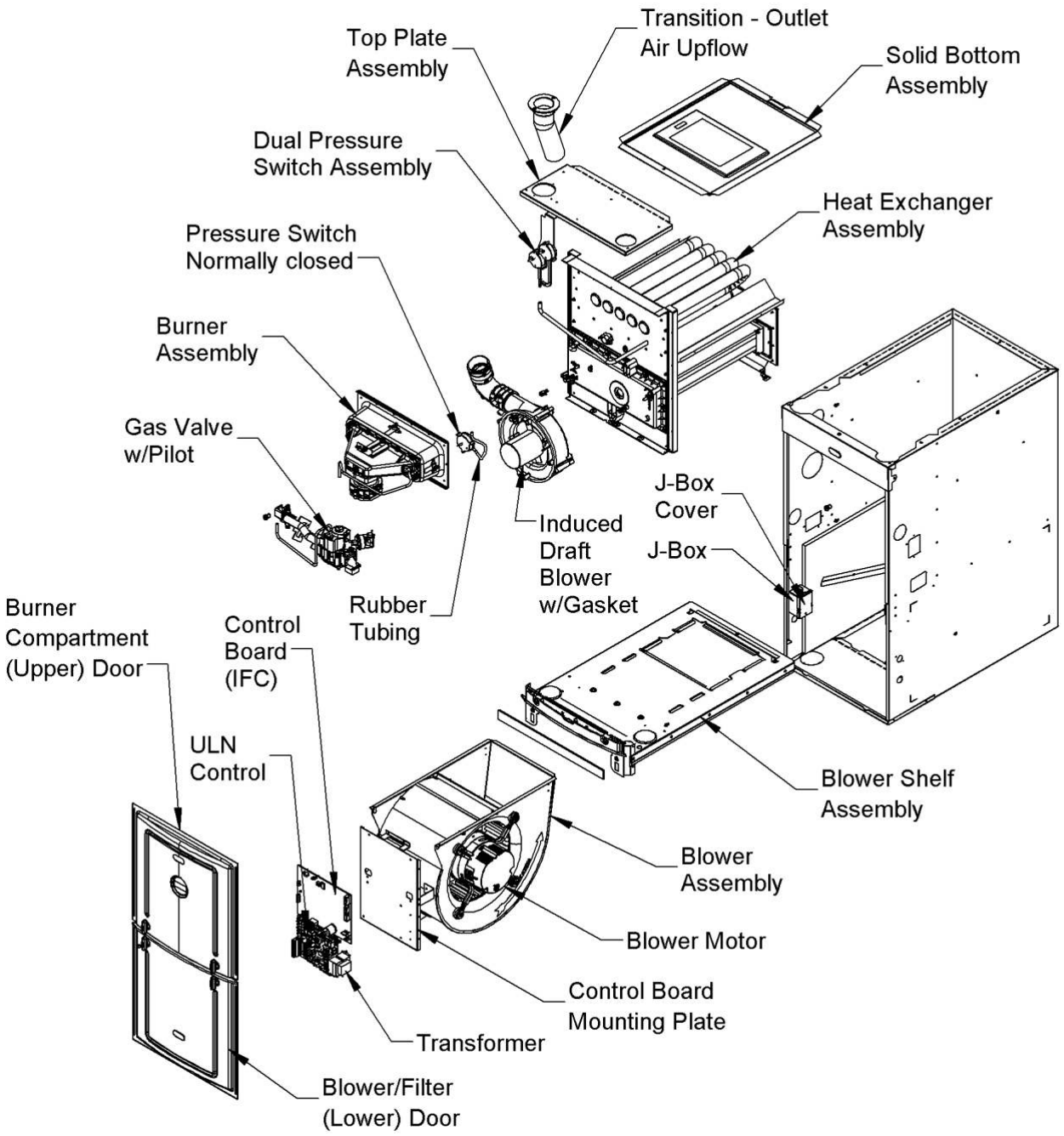

R951V parts breakdown: Junction Box

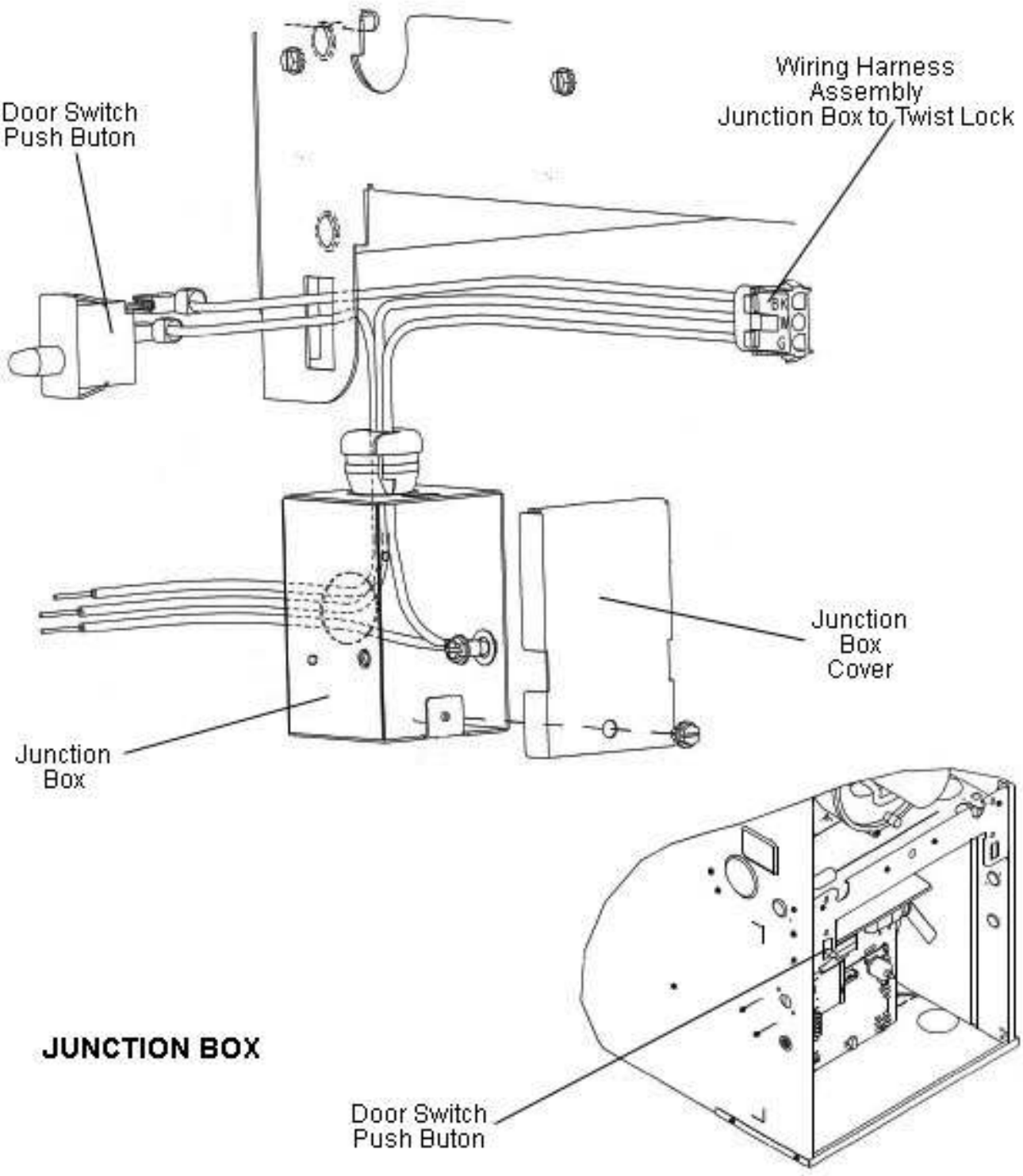

R951V parts breakdown: Blower Assembly

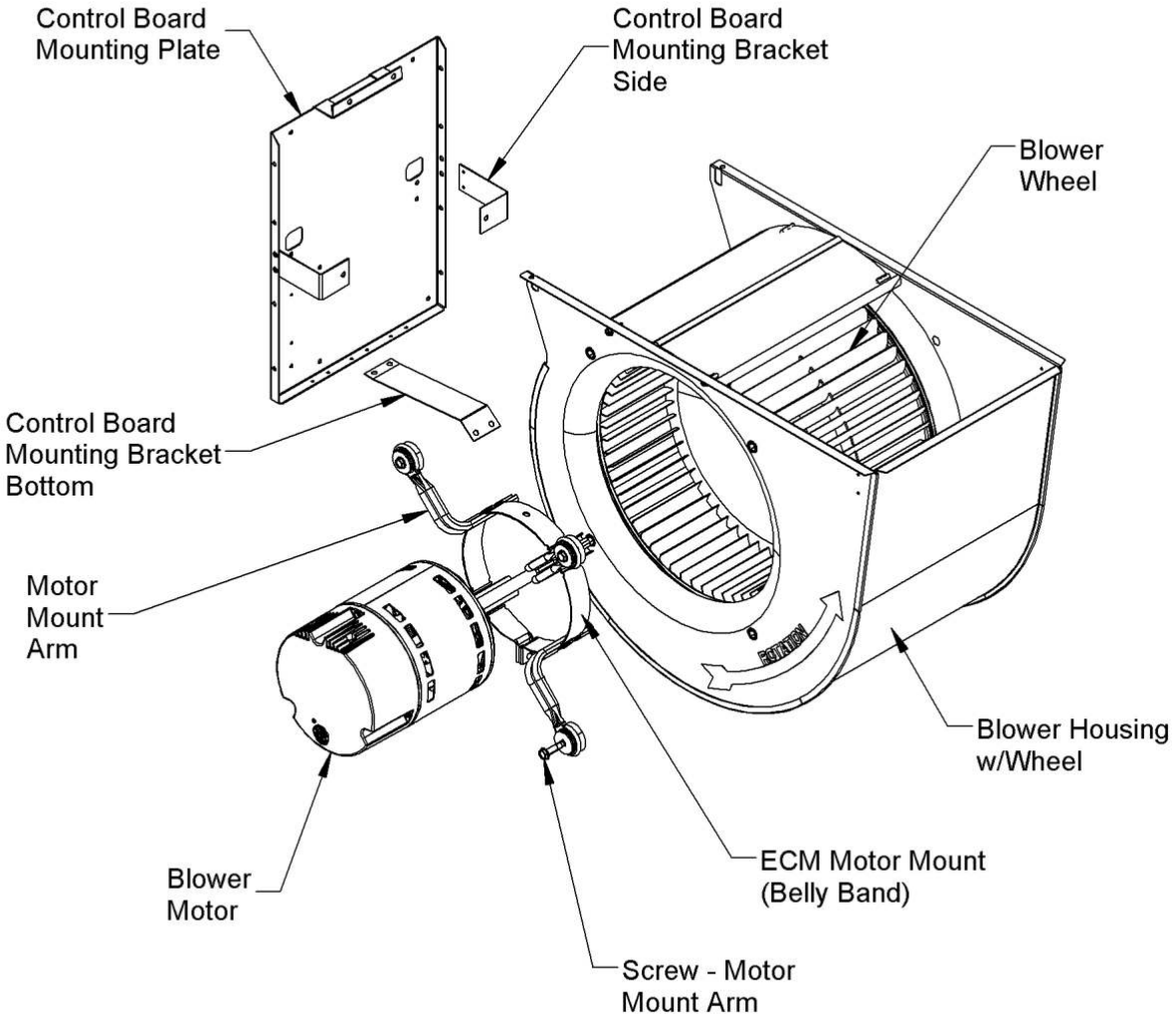

R951V parts breakdown: Induced Draft Blower

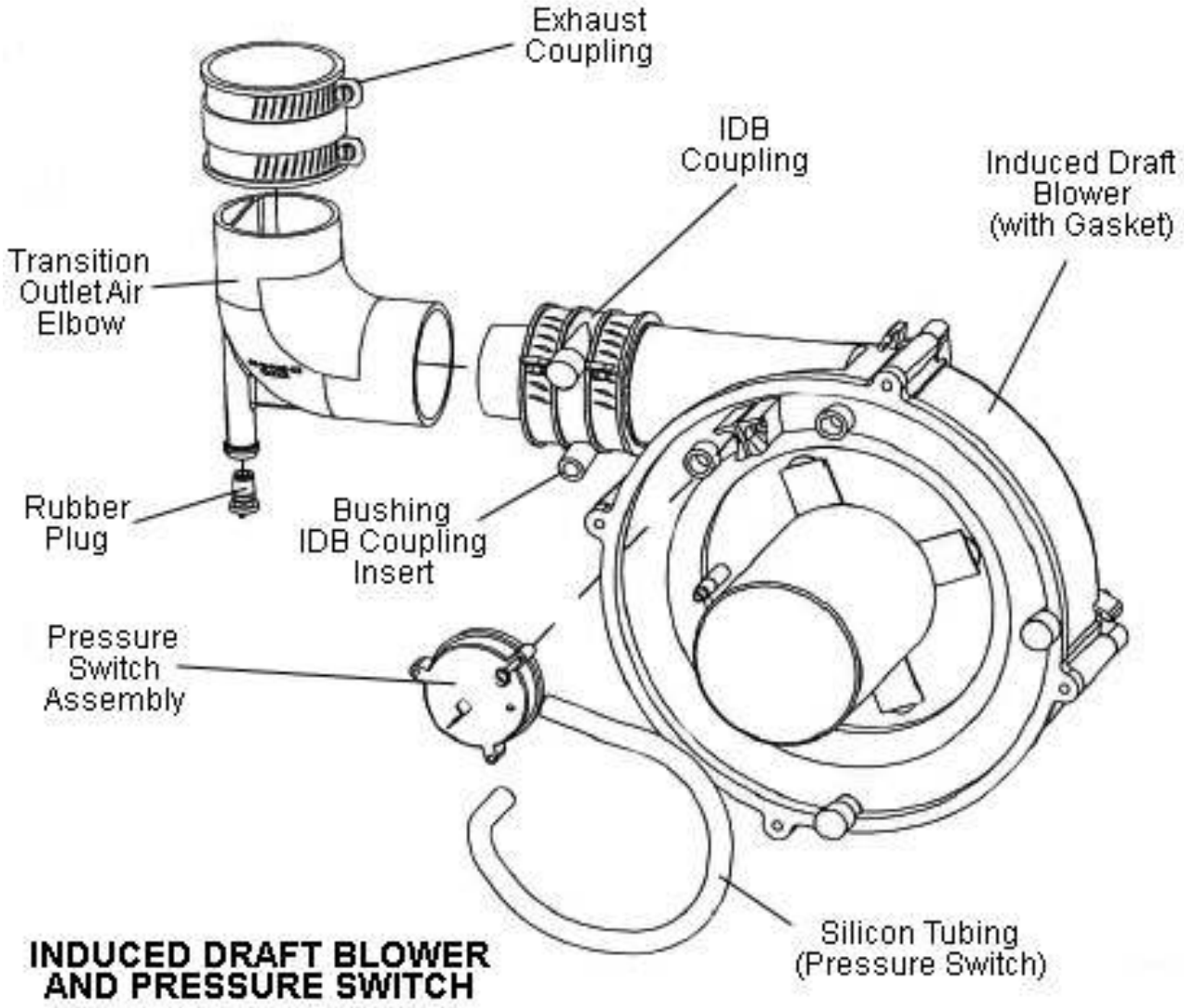

R951V parts breakdown: Burner Assembly

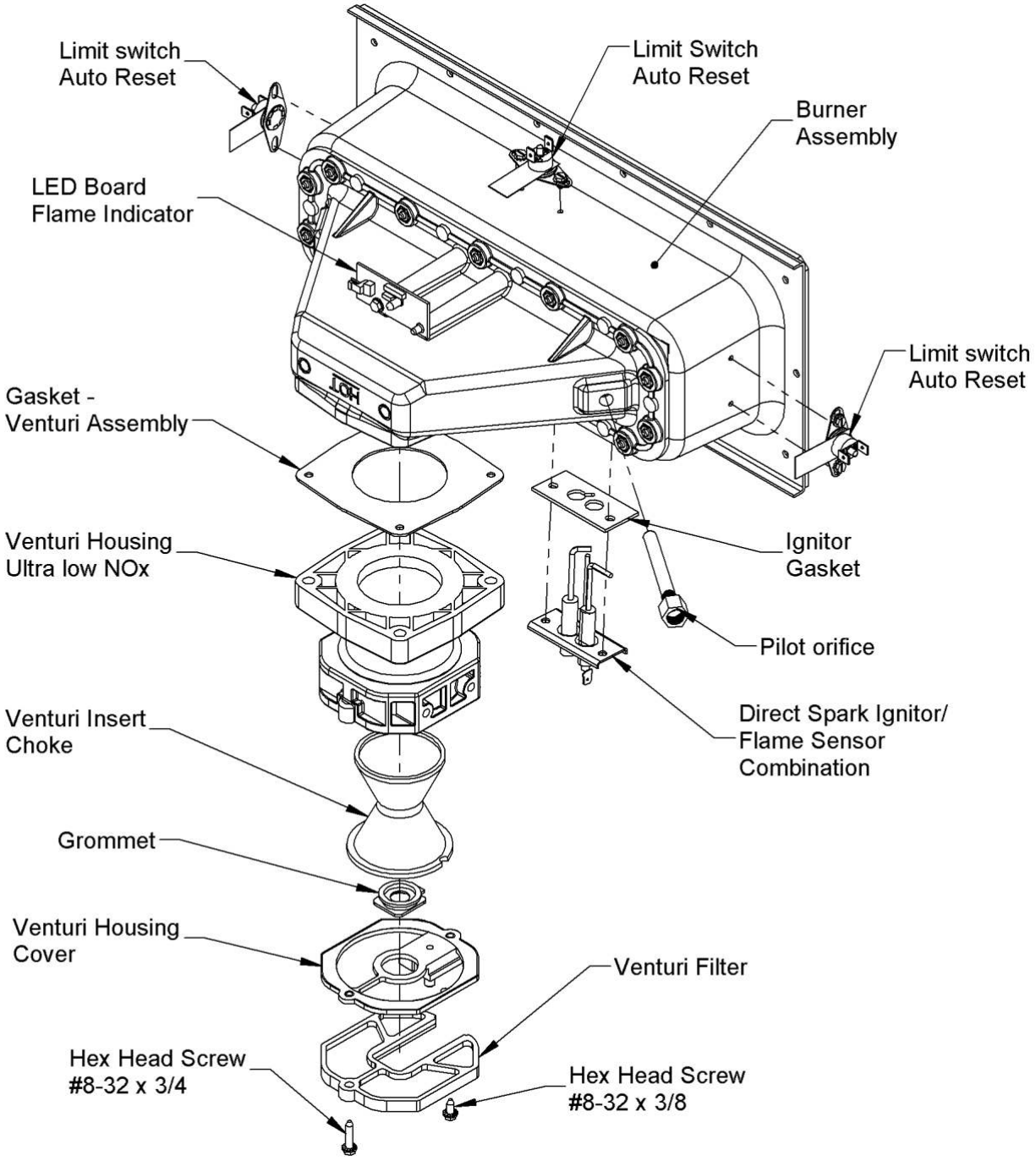

R951V parts breakdown: Blower Assembly

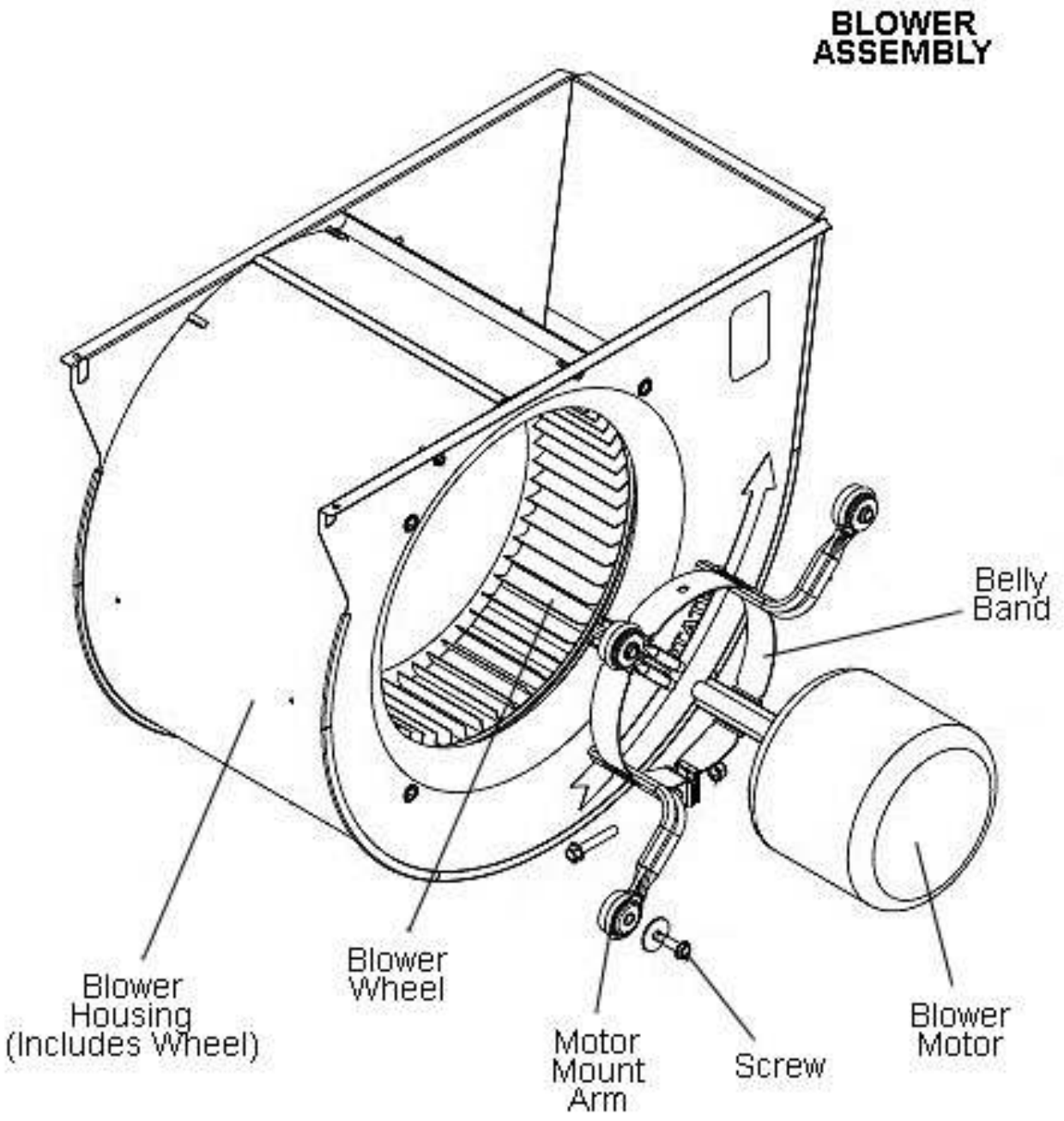

R951V parts breakdown: Heat Exchanger Assembly

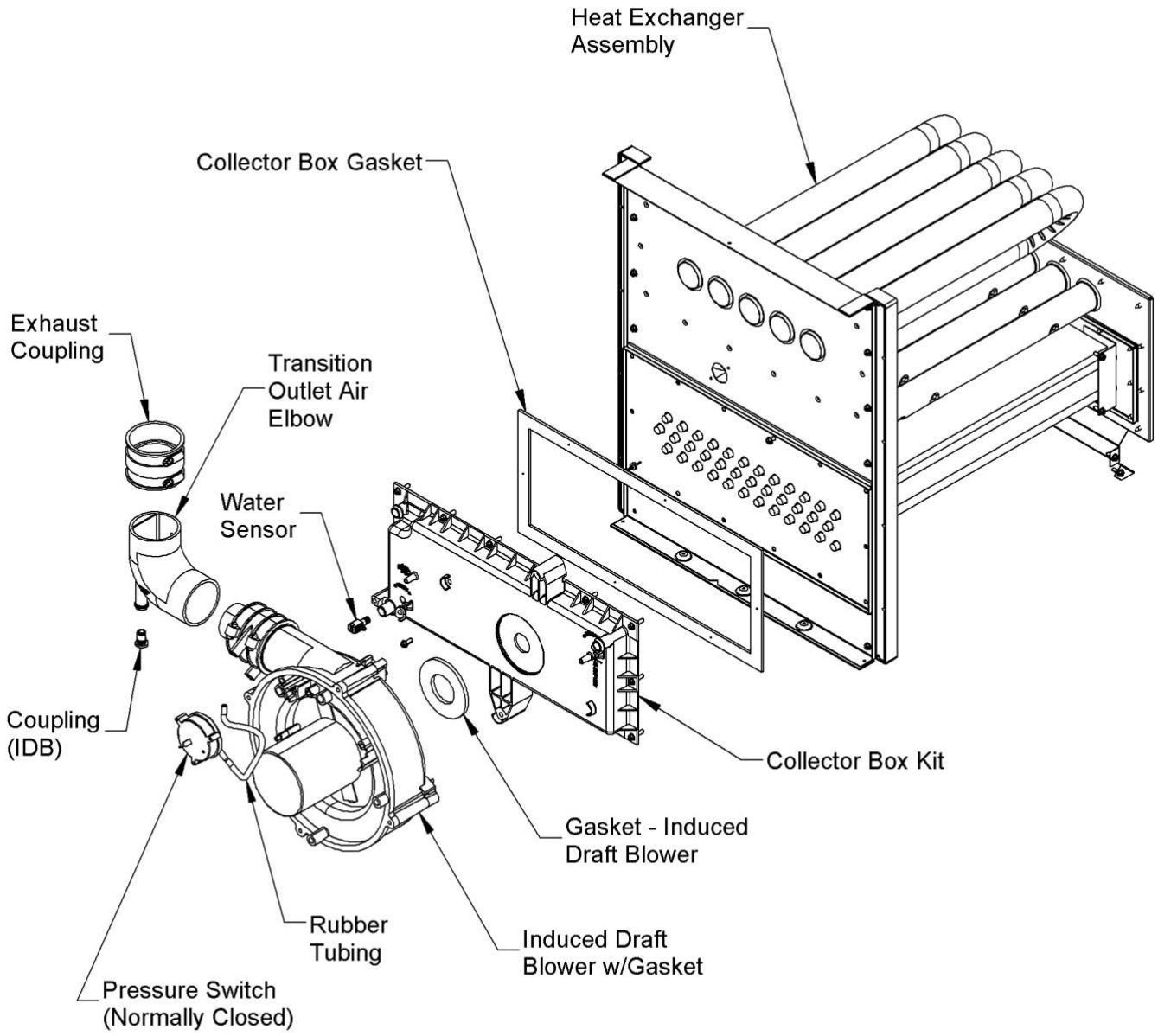

R951V parts breakdown: Control Board Mounting

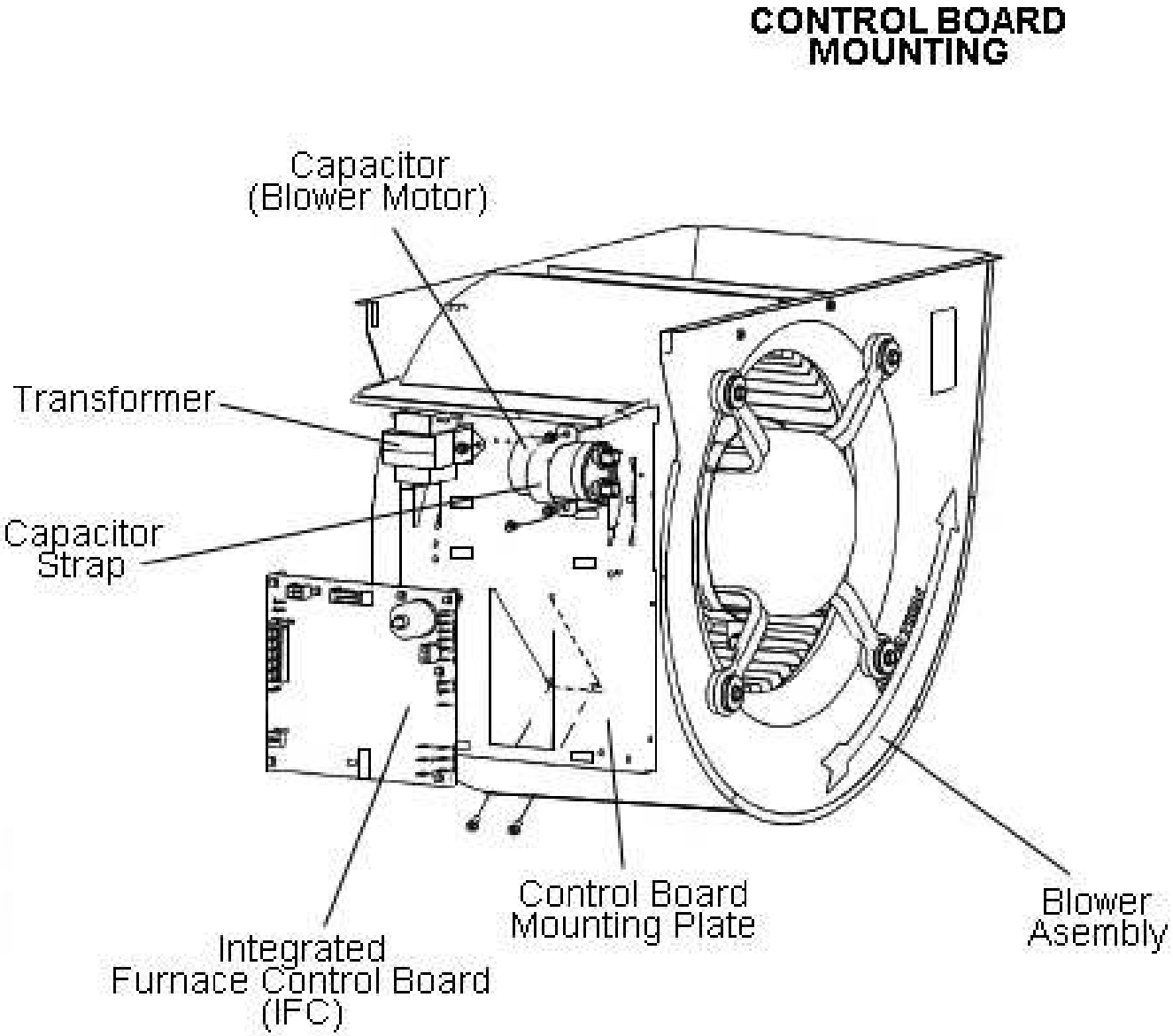

R951V parts breakdown: Gas Valve - Manifold

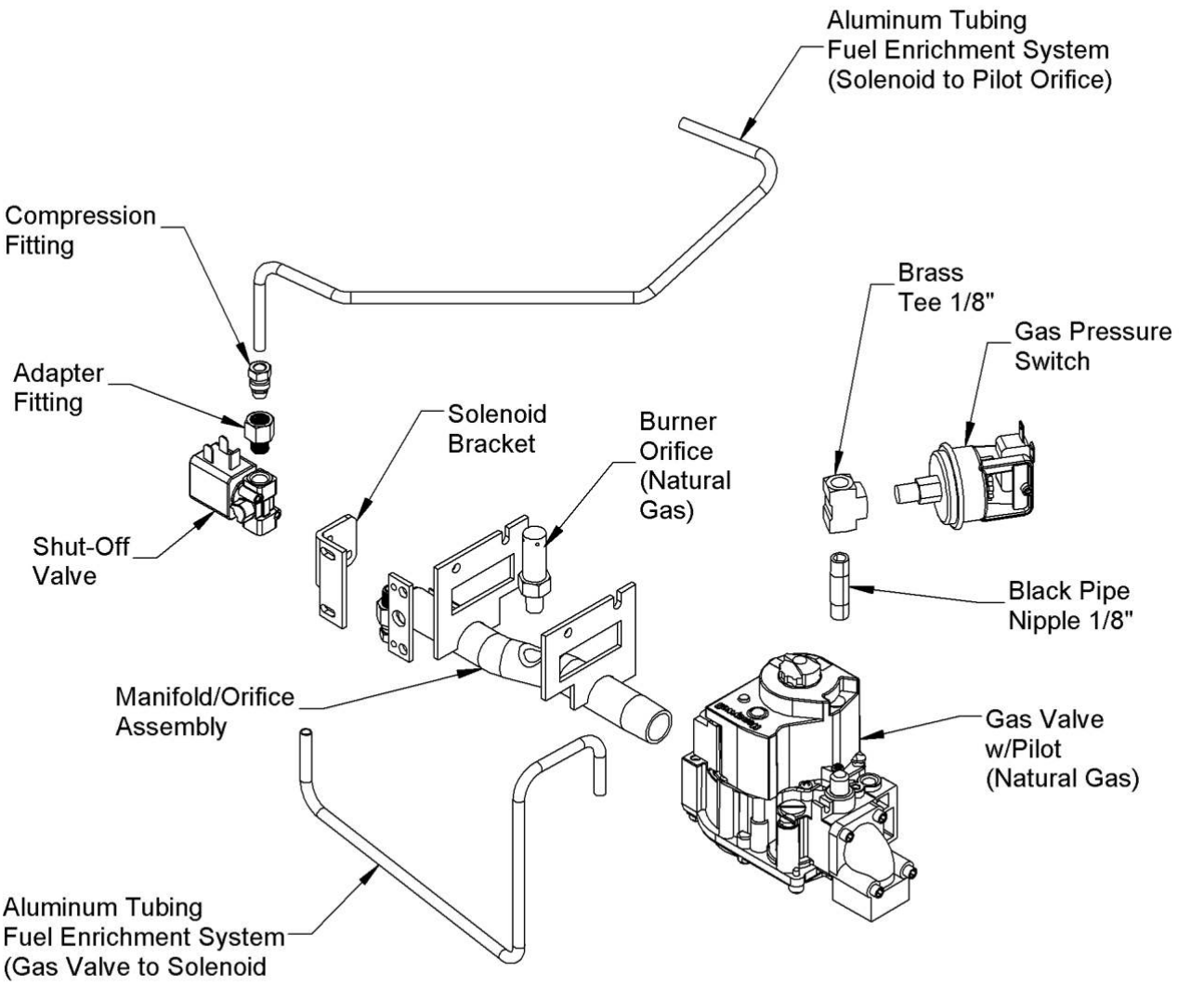

NOTE: This system is approved for Natural Gas only.

R951V parts breakdown: Burner Assembly

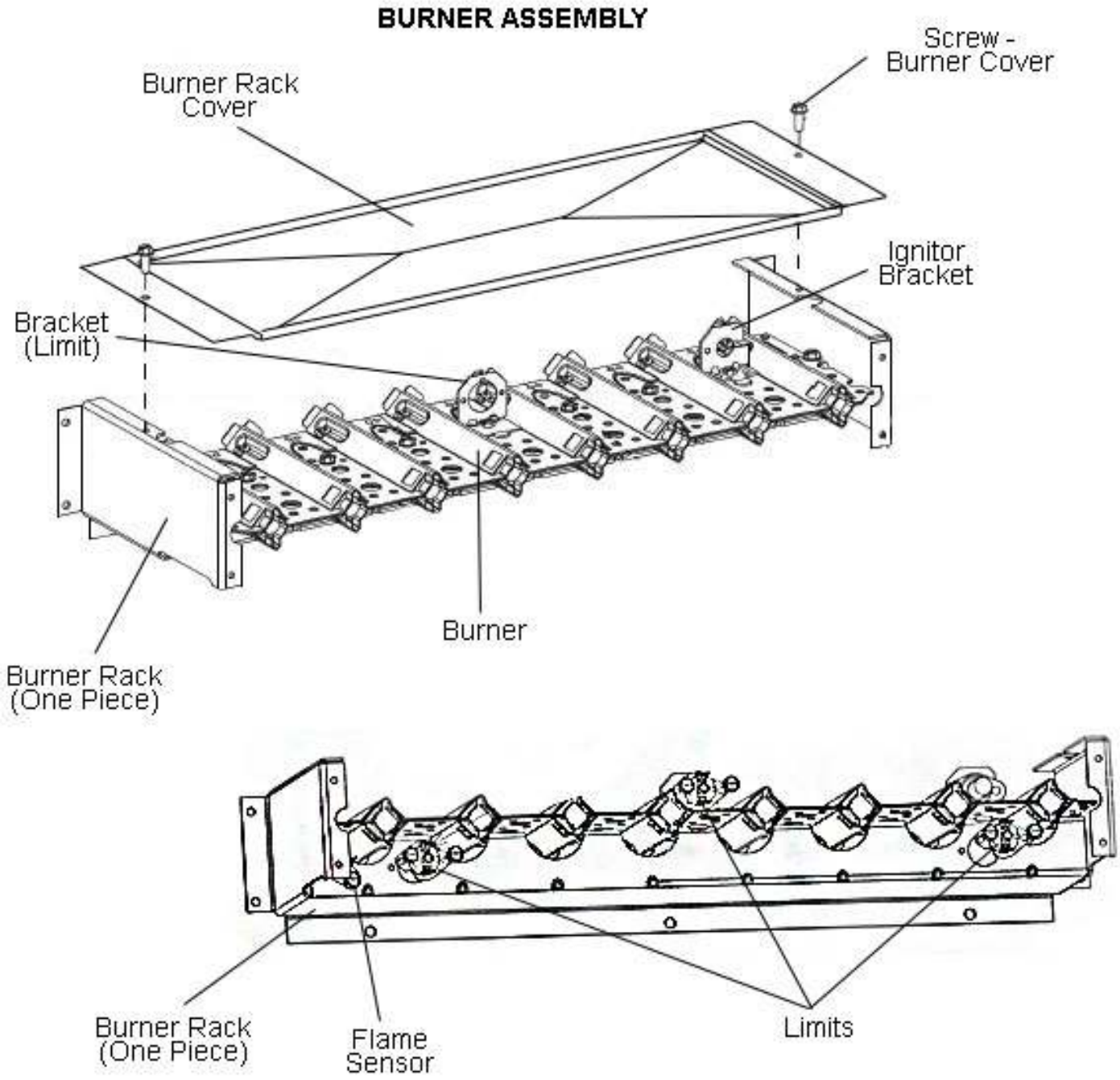

R951V parts breakdown: Cabinet View

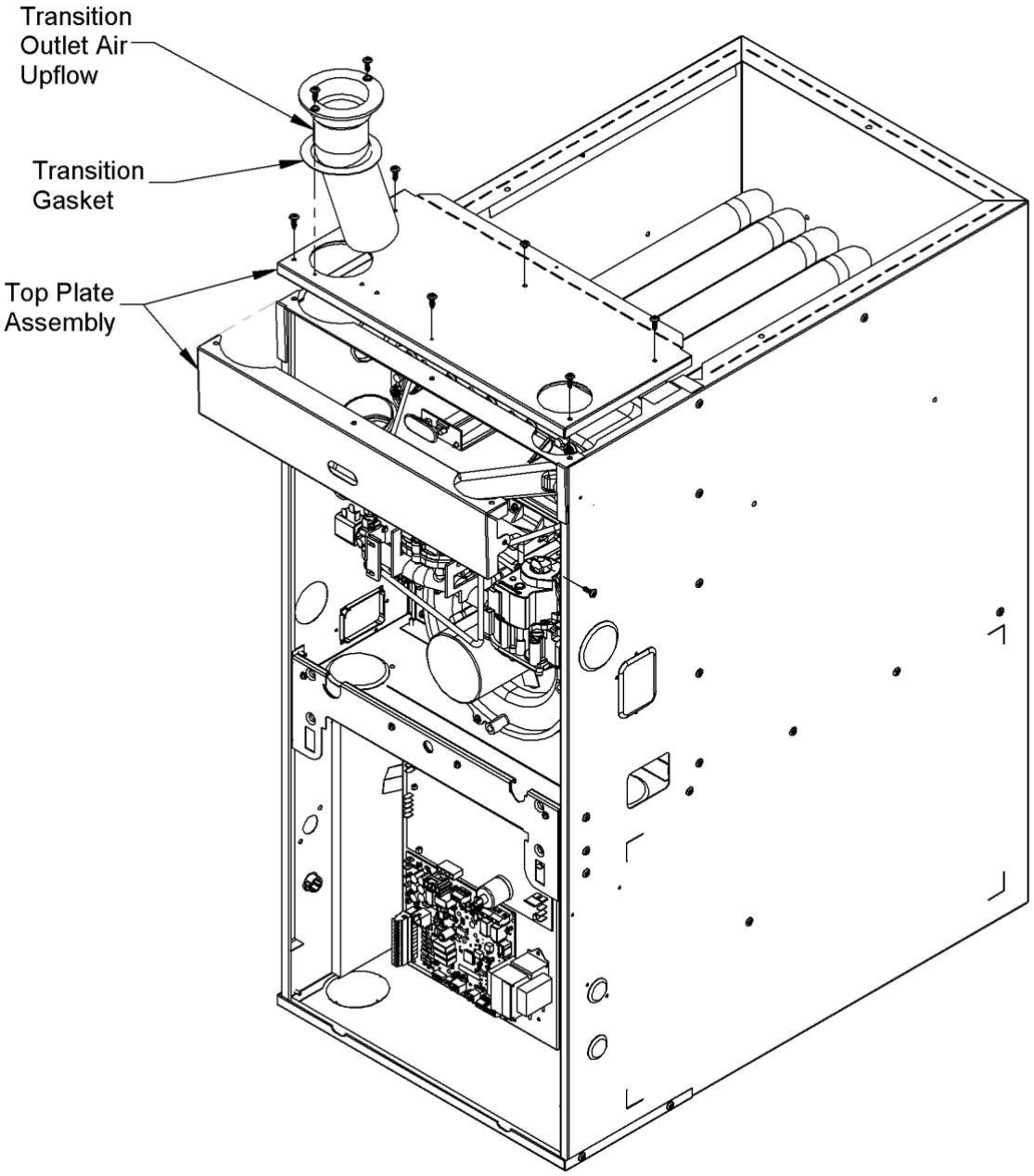

R951V parts breakdown: Heat Exchanger - Collector Box

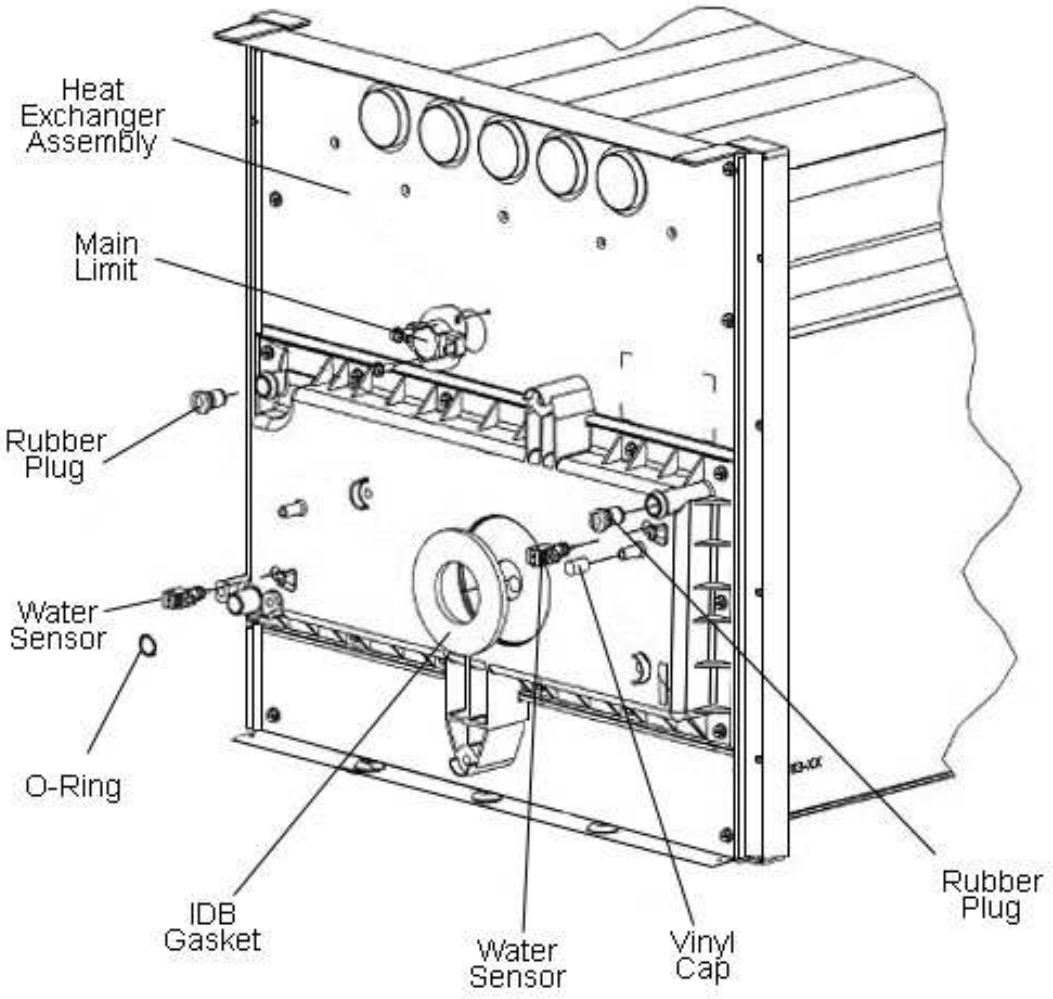

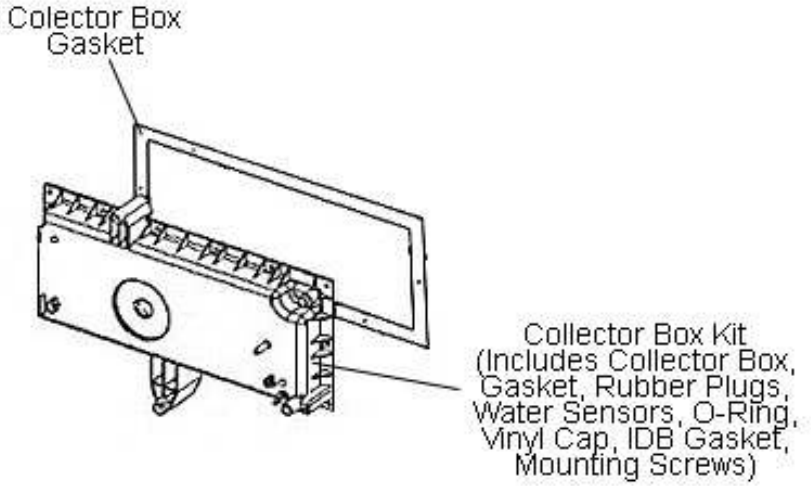

R951V parts breakdown: Trap - Hose Assembly

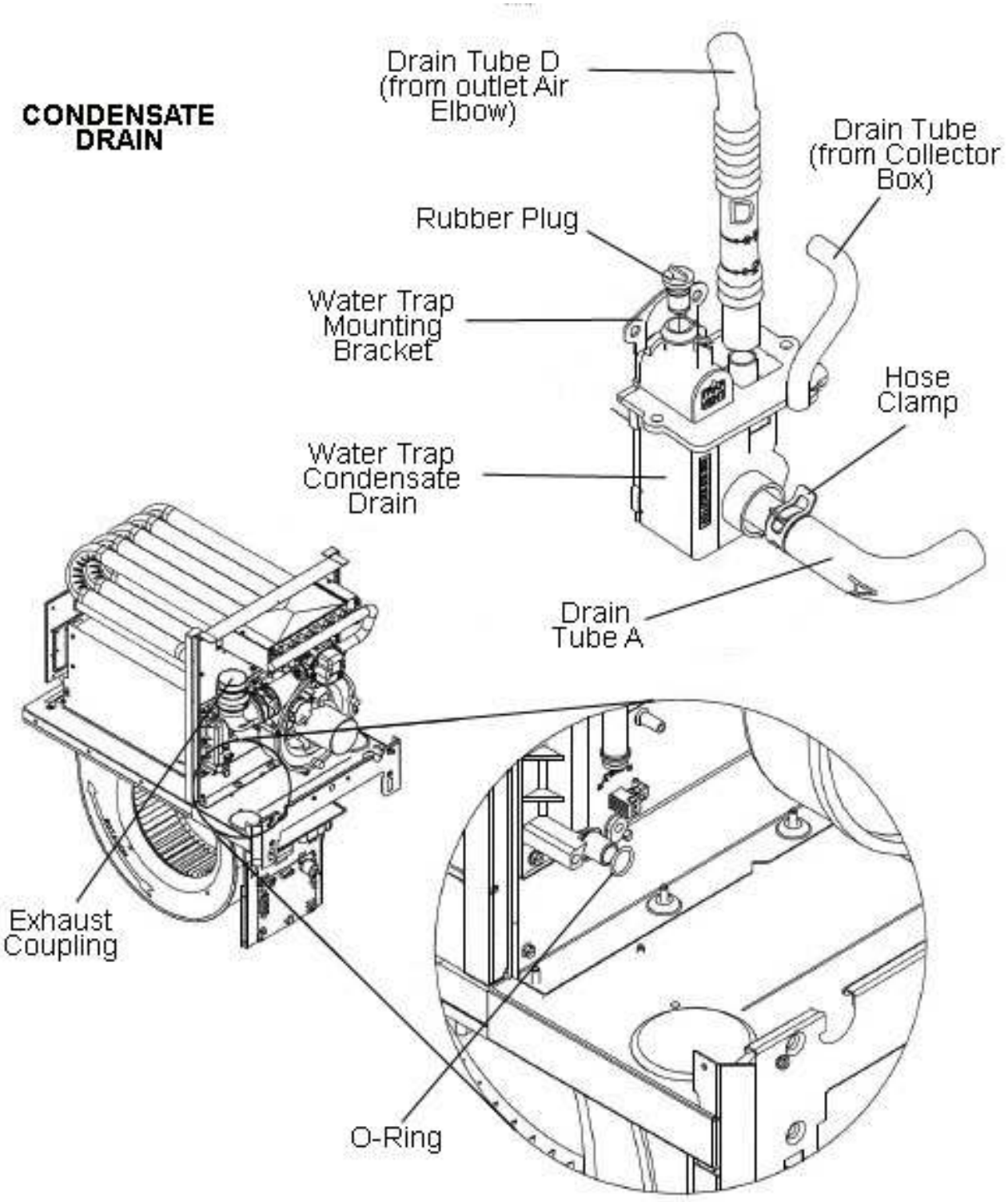

Motors & fans

Part No.	Description	Qty	Replaced By	Fits Models
AS-108515-01	Blower Assembly	1		R951V0403A17M4UCAP, R951V0403A17UHUCAP
AS-108522-01	Blower Assembly	1		R951V0403A17M4SCAP (incl. variants)
AS-108523-01	Blower Assembly	1		R951V0605A21M4SCAP, R951V0705A21M4SCAP, R951V0705A21M4UCAP, R951V0705A21UHUCAP, R951V0855A21M4SCAP, R951V0855B21M4SCAP, R951V1005A21M4SCAP, R951V1005A21M4UCAP, R951V1005A21UHUCAP (incl. variants)
AS-108532-01	Blower Assembly	1		R951V0603A17M4UCAP, R951V0603A17UHUCAP
70-104182-20	Blower Housing Assembly 11X6 CV	1		R951V0403A14M4SCAP, R951V0403A14UDSCAP (incl. variants)
70-104182-03	Housing w/Blower Wheel	1		R951V0403A17M4SCAP (incl. variants)
70-104182-05	Housing w/Blower Wheel	1		R951V0403A17M4UCAP, R951V0403A17UHUCAP, R951V0603A17M4SCAP, R951V0603A17M4UCAP, R951V0603A17UHUCAP, R951V0703A17M4SCAP (incl. variants)
70-104182-07	Housing w/Blower Wheel	1		R951V0605A21M4SCAP, R951V0705A21M4SCAP, R951V0705A21M4UCAP, R951V0705A21UHUCAP, R951V0855A21M4SCAP, R951V0855B21M4SCAP, R951V1005A21M4SCAP, R951V1005A21M4UCAP, R951V1005A21UHUCAP (incl. variants)
70-104182-09	Housing w/Blower Wheel	1		R951V1155A24M4SCAP (incl. variants)
70-110467-03	Induced Draft - Broad Ocean Single Stage	1		R951V0403A14M4SCAP, R951V0403A14UDSCAP (incl. variants)
70-104157-82	Induced Draft Blower w/Gasket	1		R951V0403A17M4SCAP, R951V0603A17M4SCAP, R951V0605A21M4SCAP, R951V0703A17M4SCAP, R951V0705A21M4SCAP, R951V0855A21M4SCAP, R951V0855B21M4SCAP, R951V1005A21M4SCAP, R951V1155A24M4SCAP (incl. variants)
70-104157-86	Induced Draft Blower w/Gasket	1		R951V0403A17M4UCAP, R951V0403A17UHUCAP, R951V0603A17M4UCAP, R951V0603A17UHUCAP, R951V0705A21M4UCAP, R951V0705A21UHUCAP, R951V1005A21M4UCAP, R951V1005A21UHUCAP
51-108483-01	Motor - SelecTech Gen 3 w/PWM (115V - 1 hp) (Programmed G3)	1		R951V0605A21M4SCAP, R951V0705A21M4SCAP, R951V0705A21M4UCAP, R951V0705A21UHUCAP, R951V0855A21M4SCAP, R951V0855B21M4SCAP, R951V1005A21M4SCAP, R951V1005A21M4UCAP, R951V1005A21UHUCAP (incl. variants)
51-108483-03	Motor - SelecTech Gen 3 w/PWM (115V - 1 hp) (Programmed G3)	1		R951V1155A24M4SCAP (incl. variants)
51-108481-01	Motor - SelecTech Gen 3 w/PWM (115V - 1/2 hp) (Programmed G3)	1		R951V0403A14M4SCAP, R951V0403A14UDSCAP, R951V0403A17M4SCAP, R951V0403A17M4UCAP, R951V0403A17UHUCAP (incl. variants)
51-108481-03	Motor - SelecTech Gen 3 w/PWM (115V - 1/2 hp) (Programmed G3)	1		R951V0603A17M4SCAP, R951V0703A17M4SCAP (incl. variants)
51-108482-01	Motor - SelecTech Gen 3 w/PWM (115V - 3/4 hp) (Programmed G3)	1		R951V0603A17M4UCAP, R951V0603A17UHUCAP
70-19929-10	Motor Mount Arm w/Grommet	1/2		All models
70-19927-04	Motor Mount Band	1		All models

Electrical

Part No.	Description	Qty	Replaced By	Fits Models
62-108462-12	Control Board - M1 Furnace 1-Stage	1		R951V0403A14M4SCAP, R951V0403A14UDSCAP, R951V0403A17M4SCAP, R951V0603A17M4SCAP, R951V0605A21M4SCAP, R951V0703A17M4SCAP, R951V0705A21M4SCAP, R951V0855A21M4SCAP, R951V0855B21M4SCAP, R951V1005A21M4SCAP, R951V1155A24M4SCAP (incl. variants)
62-109032-02	Control Board - Ultra Low Nox Furnace	1		R951V0403A17M4UCAP, R951V0403A17UHUCAP, R951V0603A17M4UCAP, R951V0603A17UHUCAP, R951V0705A21M4UCAP, R951V0705A21UHUCAP, R951V1005A21M4UCAP, R951V1005A21UHUCAP
42-22692-09K	Door Switch Kit	1		R951V0403A14M4SCAP, R951V0403A14UDSCAP, R951V0403A17UHUCAP, R951V0605A21M4SCAP (incl. variants)

Part No.	Description	Qty	Replaced By	Fits Models
ATM-3-5PK	Fuse - 3A Mini Blade Type - Automotive (5 Pack)	1		
ATM-5-5PK	Fuse - 5A Mini Blade Type - Automotive (5 Pack)	1		
62-105451-04	Integrated Furnace Control Board (IFC)	1		R951V0403A17M4UCAP, R951V0403A17UHUCAP, R951V0603A17M4UCAP, R951V0603A17UHUCAP, R951V0705A21M4UCAP, R951V0705A21UHUCAP, R951V1005A21M4UCAP, R951V1005A21UHUCAP
45-106347-01	J Box Wire Assembly	1		R951V0403A17M4UCAP, R951V0403A17UHUCAP, R951V0603A17M4UCAP, R951V0603A17UHUCAP, R951V0705A21M4UCAP, R951V0705A21UHUCAP, R951V1005A21M4UCAP, R951V1005A21UHUCAP
45-108279-01	Motor Power and Control Wire Assembly	1		All models
46-24124-06	Transformer	1		R951V0703A17M4SCAP
46-102856-04	Transformer - 50VA	1		R951V0403A17M4UCAP, R951V0403A17UHUCAP, R951V0603A17M4UCAP, R951V0603A17UHUCAP, R951V0705A21M4UCAP, R951V0705A21UHUCAP, R951V1005A21M4UCAP, R951V1005A21UHUCAP
46-24124-06K	Transformer Kit	1		R951V0403A14M4SCAP, R951V0403A14UDSCAP, R951V0403A17M4SCAP, R951V0603A17M4SCAP, R951V0605A21M4SCAP, R951V0703A17M4SCAP, R951V0705A21M4SCAP, R951V0855A21M4SCAP, R951V0855B21M4SCAP, R951V1005A21M4SCAP, R951V1155A24M4SCAP (incl. variants)
47-104184-01K	Water Sensor Kit	1		All models
45-106348-01	Wire Assembly	1		R951V0403A17M4UCAP, R951V0403A17UHUCAP, R951V0603A17M4UCAP, R951V0603A17UHUCAP, R951V0705A21M4UCAP, R951V0705A21UHUCAP, R951V1005A21M4UCAP, R951V1005A21UHUCAP
45-24371-58	Wire Assembly	1		All models
45-50202-05-M9	Wire Assembly - 14 in. Main Limit	1		R951V0403A14UDSCAP (incl. variants)
45-111045-01	Wire Harness Assembly	1		R951V0403A14UDSCAP (incl. variants)
45-109037-01	Wire Harness Assembly - IFC To AH Communications	1		R951V0403A17M4UCAP, R951V0403A17UHUCAP, R951V0603A17M4UCAP, R951V0603A17UHUCAP, R951V0705A21M4UCAP, R951V0705A21UHUCAP, R951V1005A21M4UCAP, R951V1005A21UHUCAP
45-104202-09	Wiring Harness Assembly (Twist-Lock)	1		R951V0403A14M4SCAP, R951V0403A14UDSCAP, R951V0403A17M4SCAP, R951V0603A17M4SCAP, R951V0605A21M4SCAP, R951V0703A17M4SCAP, R951V0705A21M4SCAP, R951V0855A21M4SCAP, R951V0855B21M4SCAP, R951V1005A21M4SCAP, R951V1155A24M4SCAP (incl. variants)
45-105485-02	Wiring Harness Assembly (Twist-Lock)	1		R951V0403A17M4UCAP, R951V0403A17UHUCAP, R951V0603A17M4UCAP, R951V0603A17UHUCAP, R951V0705A21M4UCAP, R951V0705A21UHUCAP, R951V1005A21M4UCAP, R951V1005A21UHUCAP

Valves & switches

Part No.	Description	Qty	Replaced By	Fits Models
42-105443-01	Gas Pressure Switch	1		R951V0403A17M4UCAP, R951V0403A17UHUCAP, R951V0603A17M4UCAP, R951V0603A17UHUCAP, R951V0705A21M4UCAP, R951V0705A21UHUCAP, R951V1005A21M4UCAP, R951V1005A21UHUCAP
60-105510-02	Gas Shutoff Valve	1		R951V0403A17M4UCAP, R951V0403A17UHUCAP, R951V0603A17M4UCAP, R951V0603A17UHUCAP, R951V0705A21M4UCAP, R951V0705A21UHUCAP, R951V1005A21M4UCAP, R951V1005A21UHUCAP
47-104465-03	Limit Switch - Auto Reset (Flanged Airstream)	1		R951V0403A14M4SCAP, R951V0403A14UDSCAP, R951V0403A17M4UCAP, R951V0403A17UHUCAP, R951V0855A21M4SCAP, R951V0855B21M4SCAP (incl. variants)
47-104465-05	Limit Switch - Auto Reset (Flanged Airstream)	1		R951V1005A21M4UCAP
47-22861-02	Limit Switch - Manual Reset (Flanged Airstream)	1		R951V0403A17M4SCAP, R951V0603A17M4SCAP, R951V0605A21M4SCAP, R951V0705A21M4SCAP, R951V0855A21M4SCAP, R951V0855B21M4SCAP, R951V1005A21M4SCAP, R951V1155A24M4SCAP (incl. variants)

Part No.	Description	Qty	Replaced By	Fits Models
47-22861-04	Limit Switch - Manual Reset (Flanged Airstream)	1		R951V0403A14M4SCAP, R951V0403A14UDSCAP, R951V0703A17M4SCAP (incl. variants)
47-104465-01K	Limit Switch Kit - Auto Reset (Flanged Airstream)	1		R951V0603A17M4SCAP, R951V0605A21M4SCAP, R951V0705A21M4SCAP (incl. variants)
47-104465-02K	Limit Switch Kit - Auto Reset (Flanged Airstream)	1		R951V0403A17M4SCAP, R951V0703A17M4SCAP, R951V1005A21M4SCAP, R951V1005A21UHUCAP, R951V1155A24M4SCAP (incl. variants)
42-106255-05	Pressure Switch	1		R951V1005A21M4UCAP, R951V1005A21UHUCAP
42-106255-06	Pressure Switch	1		R951V0403A17M4UCAP, R951V0403A17UHUCAP, R951V0603A17M4UCAP, R951V0603A17UHUCAP, R951V0705A21M4UCAP, R951V0705A21UHUCAP
42-109148-01	Pressure Switch	1		R951V1005A21M4UCAP, R951V1005A21UHUCAP
42-109148-02	Pressure Switch	1		R951V0403A17M4UCAP, R951V0403A17UHUCAP, R951V0603A17M4UCAP, R951V0603A17UHUCAP
42-109148-04	Pressure Switch	1		R951V0705A21M4UCAP, R951V0705A21UHUCAP
42-105499-09	Pressure Switch (-0.70")	1		R951V1155A24M4SCAP (incl. variants)
42-105499-06	Pressure Switch (-0.80")	1		R951V0403A17M4SCAP, R951V0603A17M4SCAP, R951V0605A21M4SCAP, R951V0703A17M4SCAP, R951V0705A21M4SCAP (incl. variants)
42-105499-01	Pressure Switch (-1.00")	1		R951V0403A14UDSCAP, R951V0855A21M4SCAP, R951V0855B21M4SCAP (incl. variants)
42-105499-04K	Pressure Switch Kit (-0.60")	1		R951V1005A21M4SCAP (incl. variants)
47-106919-03	Thermostat - Manual Reset	1		R951V0403A17M4UCAP, R951V0403A17UHUCAP, R951V0603A17M4UCAP, R951V0603A17UHUCAP, R951V0705A21M4UCAP, R951V0705A21UHUCAP, R951V1005A21M4UCAP, R951V1005A21UHUCAP
47-104465-04	Thermostat Limit Control - Gasket Assembly	1		R951V0603A17M4UCAP, R951V0603A17UHUCAP, R951V0705A21M4UCAP, R951V0705A21UHUCAP

Coil & refrigeration

Part No.	Description	Qty	Replaced By	Fits Models
82-105497-06	Tubing - Fuel Enrichment	1		R951V0403A17M4UCAP, R951V0403A17UHUCAP, R951V0603A17M4UCAP, R951V0603A17UHUCAP, R951V0705A21M4UCAP, R951V0705A21UHUCAP, R951V1005A21M4UCAP, R951V1005A21UHUCAP
82-105497-07	Tubing - Fuel Enrichment	1		R951V0403A17M4UCAP, R951V0403A17UHUCAP, R951V0603A17M4UCAP, R951V0603A17UHUCAP
82-105497-08	Tubing - Fuel Enrichment	1		R951V0705A21M4UCAP, R951V0705A21UHUCAP, R951V1005A21M4UCAP, R951V1005A21UHUCAP

Gas

Part No.	Description	Qty	Replaced By	Fits Models
75-104227-07	Burner Assembly	1		R951V0403A14M4SCAP, R951V0403A14UDSCAP (incl. variants)
AS-105434-05	Burner Assembly	1		R951V0403A17M4UCAP, R951V0403A17UHUCAP
AS-105434-06	Burner Assembly	1		R951V0603A17M4UCAP, R951V0603A17UHUCAP
AS-105434-07	Burner Assembly	1		R951V1005A21M4UCAP, R951V1005A21UHUCAP
AS-105434-08	Burner Assembly	1		R951V0705A21M4UCAP, R951V0705A21UHUCAP
AS-104123-41	Burner Assembly - 3 Burner	1		R951V0403A17M4SCAP (incl. variants)
AS-104123-42	Burner Assembly - 4 Burner	1		R951V0603A17M4SCAP, R951V0605A21M4SCAP (incl. variants)
AS-104123-43	Burner Assembly - 5 Burner	1		R951V0703A17M4SCAP, R951V0705A21M4SCAP (incl. variants)
AS-104123-44	Burner Assembly - 6 Burner	1		R951V0855A21M4SCAP, R951V0855B21M4SCAP (incl. variants)
AS-104123-45	Burner Assembly - 7 Burner	1		R951V1005A21M4SCAP (incl. variants)
AS-104123-46	Burner Assembly - 8 Burner	1		R951V1155A24M4SCAP (incl. variants)
AS-61984-13	Burner Halves Assembly	1		R951V0403A17M4SCAP (incl. variants)
AS-61984-14	Burner Halves Assembly	1		R951V0603A17M4SCAP, R951V0605A21M4SCAP (incl. variants)

Part No.	Description	Qty	Replaced By	Fits Models
AS-61984-15	Burner Halves Assembly	1		R951V0703A17M4SCAP, R951V0705A21M4SCAP (incl. variants)
AS-61984-16	Burner Halves Assembly	1		R951V0855A21M4SCAP, R951V0855B21M4SCAP (incl. variants)
AS-61984-17	Burner Halves Assembly	1		R951V1005A21M4SCAP (incl. variants)
AS-61984-18	Burner Halves Assembly	1		R951V1155A24M4SCAP (incl. variants)
82-19622-02	Fitting - Brass Loxit 1/4 in.	1		R951V0403A17M4UCAP, R951V0403A17UHUCAP, R951V0603A17M4UCAP, R951V0603A17UHUCAP, R951V0705A21M4UCAP, R951V0705A21UHUCAP, R951V1005A21M4UCAP, R951V1005A21UHUCAP
82-105493-01	Fitting, Adapter	1		R951V0403A17M4UCAP, R951V0403A17UHUCAP, R951V0603A17M4UCAP, R951V0603A17UHUCAP, R951V0705A21M4UCAP, R951V0705A21UHUCAP, R951V1005A21M4UCAP, R951V1005A21UHUCAP
62-105573-01	Flame Sensor (LED) Board	1		R951V0403A17M4UCAP, R951V0403A17UHUCAP, R951V0603A17M4UCAP, R951V0603A17UHUCAP, R951V0705A21M4UCAP, R951V0705A21UHUCAP, R951V1005A21M4UCAP, R951V1005A21UHUCAP
62-23543-08K	Flame Sensor Kit	1		R951V0403A14M4SCAP, R951V0403A14UDSCAP, R951V0403A17M4SCAP, R951V0603A17M4SCAP, R951V0605A21M4SCAP, R951V0703A17M4SCAP, R951V0705A21M4SCAP, R951V0855A21M4SCAP, R951V0855B21M4SCAP, R951V1005A21M4SCAP, R951V1155A24M4SCAP (incl. variants)
60-103901-02K	Gas Valve Kit	1		R951V0403A14M4SCAP (incl. variants)
60-105663-02	Gas Valve With Pilot	1		R951V0403A17M4UCAP, R951V0403A17UHUCAP, R951V0603A17M4UCAP, R951V0603A17UHUCAP, R951V0705A21M4UCAP, R951V0705A21UHUCAP, R951V1005A21M4UCAP, R951V1005A21UHUCAP
AS-104120-01	Heat Exchanger Assembly	1		R951V0403A17M4SCAP (incl. variants)
AS-104120-02	Heat Exchanger Assembly	1		R951V0603A17M4SCAP (incl. variants)
AS-104120-15	Heat Exchanger Assembly	1		R951V1005A21M4SCAP (incl. variants)
AS-104120-17	Heat Exchanger Assembly	1		R951V0855A21M4SCAP (incl. variants)
AS-104120-18	Heat Exchanger Assembly	1		R951V0855B21M4SCAP (incl. variants)
AS-104120-21	Heat Exchanger Assembly	1		R951V1155A24M4SCAP (incl. variants)
AS-104120-24	Heat Exchanger Assembly	1		R951V0705A21M4SCAP (incl. variants)
AS-104120-52	Heat Exchanger Assembly	1		R951V0403A17M4UCAP, R951V0403A17UHUCAP
AS-104120-53	Heat Exchanger Assembly	1		R951V1005A21M4UCAP, R951V1005A21UHUCAP
AS-104120-54	Heat Exchanger Assembly	1		R951V0603A17M4UCAP, R951V0603A17UHUCAP
AS-104120-55	Heat Exchanger Assembly	1		R951V0705A21M4UCAP, R951V0705A21UHUCAP
AS-104858-03	Heat Exchanger Assembly	1		R951V0703A17M4SCAP (incl. variants)
62-24141-07	Ignitor - Direct Spark Ignition (DSI)	1		R951V0403A14M4SCAP, R951V0403A14UDSCAP, R951V0403A17M4SCAP, R951V0603A17M4SCAP, R951V0605A21M4SCAP, R951V0703A17M4SCAP, R951V0705A21M4SCAP, R951V0855A21M4SCAP, R951V0855B21M4SCAP, R951V1005A21M4SCAP, R951V1155A24M4SCAP (incl. variants)
62-105486-01	Orifice	1		R951V0403A17M4UCAP, R951V0403A17UHUCAP, R951V0603A17M4UCAP, R951V0603A17UHUCAP, R951V0705A21M4UCAP, R951V0705A21UHUCAP
62-22175-51	Orifice	1		R951V0403A14M4SCAP, R951V0403A14UDSCAP, R951V0403A17M4SCAP, R951V0603A17M4SCAP, R951V0605A21M4SCAP, R951V0703A17M4SCAP, R951V0705A21M4SCAP, R951V0855A21M4SCAP, R951V0855B21M4SCAP, R951V1005A21M4SCAP, R951V1155A24M4SCAP (incl. variants)
60-109385-01	Single Stage Gas Valve - NG	1		R951V0403A17M4SCAP, R951V0603A17M4SCAP, R951V0605A21M4SCAP, R951V0703A17M4SCAP, R951V0705A21M4SCAP, R951V0855A21M4SCAP, R951V0855B21M4SCAP, R951V1005A21M4SCAP, R951V1155A24M4SCAP (incl. variants)

Cabinet & hardware

Part No.	Description	Qty	Replaced By	Fits Models
63-106763-01	Black Oxide Square Drive Screw, 8-18 x 1/2 in.	1/2		All models

Part No.	Description	Qty	Replaced By	Fits Models
63-106763-02	Black Oxide Square Drive Screw, 8-18 x 1/4 in.	1		All models
AS-104135-01	Blower Shelf Assembly	1		R951V0403A17M4UCAP, R951V0403A17UHUCAP, R951V0603A17M4SCAP, R951V0603A17M4UCAP, R951V0603A17UHUCAP, R951V0703A17M4SCAP (incl. variants)
AS-104135-02	Blower Shelf Assembly	1		R951V0605A21M4SCAP, R951V0705A21M4SCAP, R951V0705A21M4UCAP, R951V0705A21UHUCAP, R951V0855A21M4SCAP, R951V0855B21M4SCAP, R951V1005A21M4SCAP, R951V1005A21M4UCAP, R951V1005A21UHUCAP (incl. variants)
AS-104135-03	Blower Shelf Assembly	1		R951V1155A24M4SCAP (incl. variants)
AS-104135-04	Blower Shelf Assembly	1		R951V0403A17M4SCAP (incl. variants)
AS-104043-02X	Blower/Lower Door/Label Kit	1		R951V0605A21M4SCAP, R951V0705A21M4SCAP, R951V0855A21M4SCAP, R951V0855B21M4SCAP, R951V1005A21M4SCAP (incl. variants)
AS-104043-03X	Blower/Lower Door/Label Kit	1		R951V1155A24M4SCAP (incl. variants)
63-19919-01	Bolt, 1/4-20 x 1-1/2 in.	1		All models
AE-103585-01	Bottom - Solid	1		R951V0403A17M4SCAP, R951V0403A17M4UCAP, R951V0403A17UHUCAP, R951V0603A17M4SCAP, R951V0603A17M4UCAP, R951V0603A17UHUCAP, R951V0703A17M4SCAP (incl. variants)
AE-103585-02	Bottom - Solid	1		R951V0605A21M4SCAP, R951V0705A21M4SCAP, R951V0705A21M4UCAP, R951V0705A21UHUCAP, R951V0855A21M4SCAP, R951V0855B21M4SCAP, R951V1005A21M4SCAP, R951V1005A21M4UCAP, R951V1005A21UHUCAP (incl. variants)
AE-103585-03	Bottom - Solid	1		R951V1155A24M4SCAP (incl. variants)
AE-103585-04	Bottom - Solid	1		R951V0403A14M4SCAP, R951V0403A14UDSCAP (incl. variants)
AS-104314-01	Bottom Plate Assembly	1		R951V0403A17M4SCAP, R951V0403A17M4UCAP, R951V0403A17UHUCAP, R951V0603A17M4SCAP, R951V0603A17M4UCAP, R951V0603A17UHUCAP, R951V0703A17M4SCAP (incl. variants)
AS-104314-02	Bottom Plate Assembly	1		R951V0605A21M4SCAP, R951V0705A21M4SCAP, R951V0705A21M4UCAP, R951V0705A21UHUCAP, R951V0855A21M4SCAP, R951V0855B21M4SCAP, R951V1005A21M4SCAP, R951V1005A21M4UCAP, R951V1005A21UHUCAP (incl. variants)
AS-104314-03	Bottom Plate Assembly	1		R951V1155A24M4SCAP (incl. variants)
AE-61913-02	Bracket - Overtemperature Switch	1		R951V1155A24M4SCAP (incl. variants)
10-106267-01	Bracket - Solenoid	1		R951V0403A17M4UCAP, R951V0403A17UHUCAP, R951V0603A17M4UCAP, R951V0603A17UHUCAP, R951V0705A21M4UCAP, R951V0705A21UHUCAP, R951V1005A21M4UCAP, R951V1005A21UHUCAP
AE-104332-01	Bracket Door Mounting	1		R951V0403A17M4SCAP, R951V0403A17M4UCAP, R951V0403A17UHUCAP, R951V0603A17M4SCAP, R951V0603A17M4UCAP, R951V0603A17UHUCAP, R951V0703A17M4SCAP (incl. variants)
AE-104332-02	Bracket Door Mounting	1		R951V0605A21M4SCAP, R951V0705A21M4SCAP, R951V0705A21M4UCAP, R951V0705A21UHUCAP, R951V0855A21M4SCAP, R951V0855B21M4SCAP, R951V1005A21M4SCAP, R951V1005A21M4UCAP, R951V1005A21UHUCAP (incl. variants)
AE-104332-03	Bracket Door Mounting	1		R951V1155A24M4SCAP (incl. variants)
AE-104332-04	Bracket Door Mounting	1		R951V0403A14M4SCAP, R951V0403A14UDSCAP (incl. variants)
81-105444-02	Brass - Female Pipe Tee 1/8 X 1/8 X 1/8	1		R951V0403A17M4UCAP, R951V0403A17UHUCAP, R951V0603A17M4UCAP, R951V0603A17UHUCAP, R951V0705A21M4UCAP, R951V0705A21UHUCAP, R951V1005A21M4UCAP, R951V1005A21UHUCAP
AS-104042-02	Burner Compartment Door - Upper Door	1		R951V0605A21M4SCAP, R951V0705A21M4SCAP, R951V0855A21M4SCAP, R951V0855B21M4SCAP, R951V1005A21M4SCAP (incl. variants)
AE-104121-01	Burner Rack	1		R951V0403A14M4SCAP, R951V0403A14UDSCAP, R951V0403A17M4SCAP (incl. variants)
AE-104121-02	Burner Rack	1		R951V0603A17M4SCAP, R951V0605A21M4SCAP (incl. variants)

Part No.	Description	Qty	Replaced By	Fits Models
AE-104121-03	Burner Rack	1		R951V0703A17M4SCAP, R951V0705A21M4SCAP (incl. variants)
AE-104121-04	Burner Rack	1		R951V0855A21M4SCAP, R951V0855B21M4SCAP (incl. variants)
AE-104121-05	Burner Rack	1		R951V1005A21M4SCAP (incl. variants)
AE-104121-06	Burner Rack	1		R951V1155A24M4SCAP (incl. variants)
AE-104122-01	Burner Rack Cover	1		R951V0403A14M4SCAP, R951V0403A14UDSCAP, R951V0403A17M4SCAP (incl. variants)
AE-104122-02	Burner Rack Cover	1		R951V0603A17M4SCAP, R951V0605A21M4SCAP (incl. variants)
AE-104122-03	Burner Rack Cover	1		R951V0703A17M4SCAP, R951V0705A21M4SCAP (incl. variants)
AE-104122-04	Burner Rack Cover	1		R951V0855A21M4SCAP, R951V0855B21M4SCAP (incl. variants)
AE-104122-05	Burner Rack Cover	1		R951V1005A21M4SCAP (incl. variants)
AE-104122-06	Burner Rack Cover	1		R951V1155A24M4SCAP (incl. variants)
68-105396-01	Burner/ Combustion Chamber/ Venturi Assembly Gasket	1		R951V0403A17M4UCAP, R951V0403A17UHUCAP, R951V0603A17M4UCAP, R951V0603A17UHUCAP
68-105396-02	Burner/ Combustion Chamber/ Venturi Assembly Gasket	1		R951V0705A21M4UCAP, R951V0705A21UHUCAP, R951V1005A21M4UCAP, R951V1005A21UHUCAP
AS-104042-03X	Burner/Upper Door/Label Kit	1		R951V1155A24M4SCAP (incl. variants)
45-17055-13	Bushing - Strain Relief	1		All models
64-101148-09	Cable Tie - Double Loop, 11.8"	1		R951V0403A14M4SCAP, R951V0403A14UDSCAP, R951V0403A17M4SCAP, R951V0603A17M4SCAP, R951V0605A21M4SCAP, R951V0703A17M4SCAP, R951V0705A21M4SCAP, R951V0855A21M4SCAP, R951V0855B21M4SCAP, R951V1005A21M4SCAP, R951V1155A24M4SCAP (incl. variants)
64-103686-03	Clamp - Wire Hose	1		R951V0403A14M4SCAP, R951V0403A14UDSCAP, R951V0403A17M4SCAP, R951V0603A17M4SCAP, R951V0605A21M4SCAP, R951V0703A17M4SCAP, R951V0705A21M4SCAP, R951V0705A21UHUCAP, R951V0855A21M4SCAP, R951V0855B21M4SCAP, R951V1005A21M4SCAP, R951V1005A21UHUCAP, R951V1155A24M4SCAP (incl. variants)
68-104111-11	Collector Box	1		R951V0705A21M4SCAP (incl. variants)
68-110928-01	Collector Box - 14 in. Wide - 0.92 in. Choke	1		R951V0403A14M4SCAP, R951V0403A14UDSCAP (incl. variants)
68-103546-01	Collector Box Gasket	1		R951V1155A24M4SCAP (incl. variants)
68-103546-02	Collector Box Gasket	1		R951V0605A21M4SCAP, R951V0705A21M4SCAP, R951V0705A21M4UCAP, R951V0705A21UHUCAP, R951V0855A21M4SCAP, R951V0855B21M4SCAP, R951V1005A21M4SCAP, R951V1005A21M4UCAP, R951V1005A21UHUCAP (incl. variants)
68-103546-03	Collector Box Gasket	1		R951V0403A17M4SCAP, R951V0403A17M4UCAP, R951V0403A17UHUCAP, R951V0603A17M4SCAP, R951V0603A17M4UCAP, R951V0603A17UHUCAP, R951V0703A17M4SCAP (incl. variants)
68-104111-81	Collector Box Kit	1		R951V0403A17M4SCAP (incl. variants)
68-104111-82	Collector Box Kit	1		R951V0855B21M4SCAP, R951V1005A21M4SCAP (incl. variants)
68-104111-83	Collector Box Kit	1		R951V1155A24M4SCAP (incl. variants)
68-104111-84	Collector Box Kit	1		R951V0603A17M4SCAP (incl. variants)
68-104111-85	Collector Box Kit	1		R951V0703A17M4SCAP (incl. variants)
68-104111-86	Collector Box Kit	1		R951V0855A21M4SCAP (incl. variants)
68-104111-96	Collector Box Kit	1		R951V0403A17M4UCAP, R951V0403A17UHUCAP, R951V0603A17M4UCAP, R951V0603A17UHUCAP
68-104111-98	Collector Box Kit	1		R951V0705A21M4UCAP, R951V0705A21UHUCAP, R951V1005A21M4UCAP, R951V1005A21UHUCAP
10-103105-04	Control Board Mounting Feet 80+	1		R951V0403A17M4UCAP, R951V0403A17UHUCAP, R951V0603A17M4UCAP, R951V0603A17UHUCAP, R951V0705A21M4UCAP, R951V0705A21UHUCAP, R951V1005A21M4UCAP, R951V1005A21UHUCAP

Part No.	Description	Qty	Replaced By	Fits Models
10-103105-03	Control Board Mounting Feet 90+	1		R951V0403A17M4UCAP, R951V0403A17UHUCAP, R951V0603A17M4UCAP, R951V0603A17UHUCAP, R951V0705A21M4UCAP, R951V0705A21UHUCAP, R951V1005A21M4UCAP, R951V1005A21UHUCAP
10-104878-05	Control Board Mounting Plate	1		R951V0403A17M4UCAP, R951V0403A17UHUCAP, R951V0603A17M4UCAP, R951V0603A17UHUCAP, R951V0705A21M4UCAP, R951V0705A21UHUCAP, R951V1005A21M4UCAP, R951V1005A21UHUCAP
AE-103589-01	Control Board Mounting Plate	1		R951V0403A14M4SCAP, R951V0403A14UDSCAP, R951V0403A17M4SCAP, R951V0603A17M4SCAP, R951V0605A21M4SCAP, R951V0703A17M4SCAP, R951V0705A21M4SCAP, R951V0855A21M4SCAP, R951V0855B21M4SCAP, R951V1005A21M4SCAP, R951V1155A24M4SCAP (incl. variants)
62-105218-04	Direct Spark Igniter/ Flame Sensor Combination	1		R951V0403A17M4UCAP, R951V0403A17UHUCAP, R951V0603A17M4UCAP, R951V0603A17UHUCAP, R951V0705A21M4UCAP, R951V0705A21UHUCAP, R951V1005A21M4UCAP, R951V1005A21UHUCAP
AS-104042-05	Door Assembly	1		R951V0403A17M4UCAP, R951V0403A17UHUCAP, R951V0603A17M4UCAP, R951V0603A17UHUCAP
AS-104042-06	Door Assembly	1		R951V0705A21M4UCAP, R951V0705A21UHUCAP, R951V1005A21M4UCAP, R951V1005A21UHUCAP
AS-104043-21	Door Assembly	1		R951V0403A17M4UCAP, R951V0403A17UHUCAP, R951V0603A17M4UCAP, R951V0603A17UHUCAP
AS-104043-22	Door Assembly	1		R951V0705A21M4UCAP, R951V0705A21UHUCAP, R951V1005A21M4UCAP, R951V1005A21UHUCAP
68-104374-34	Door Filler (Gray) - 14.0 in.	1		R951V0403A14M4SCAP, R951V0403A14UDSCAP (incl. variants)
68-104374-31	Door Filler (Gray) - 17.5 in.	1		R951V0403A17M4SCAP, R951V0403A17M4UCAP, R951V0403A17UHUCAP, R951V0603A17M4SCAP, R951V0603A17M4UCAP, R951V0603A17UHUCAP, R951V0703A17M4SCAP (incl. variants)
68-104374-32	Door Filler (Gray) - 21.0 in.	1		R951V0605A21M4SCAP, R951V0705A21M4SCAP, R951V0705A21M4UCAP, R951V0705A21UHUCAP, R951V0855A21M4SCAP, R951V0855B21M4SCAP, R951V1005A21M4SCAP, R951V1005A21M4UCAP, R951V1005A21UHUCAP (incl. variants)
68-104374-33	Door Filler (Gray) - 24.5 in.	1		R951V1155A24M4SCAP (incl. variants)
79-104393-01	Drain Tube	1		R951V0403A14M4SCAP, R951V0403A14UDSCAP, R951V0605A21M4SCAP, R951V0855B21M4SCAP (incl. variants)
79-104394-01	Drain Tube	1		R951V0403A14M4SCAP, R951V0403A14UDSCAP, R951V0605A21M4SCAP, R951V0855B21M4SCAP (incl. variants)
79-107210-01	EPDM Rubber Tubing (Bulk - Non-Salable)	1		All models
68-104146-04	Exhaust Coupling	1		R951V0403A17UHUCAP, R951V0605A21M4SCAP, R951V0855B21M4SCAP (incl. variants)
68-104146-05	Exhaust Coupling	1		R951V0403A14M4SCAP, R951V0403A14UDSCAP (incl. variants)
68-103547-04	Gasket (Center Panel/Front Plate)	1		R951V0403A14M4SCAP, R951V0403A14UDSCAP (incl. variants)
68-103546-04	Gasket (Collector Box/Front Plate)	1		R951V0403A14M4SCAP, R951V0403A14UDSCAP (incl. variants)
68-104413-01	Gasket - 25 ft.	1/3		All models
68-104382-04	Gasket - Blower Shelf	1		R951V0403A14M4SCAP, R951V0403A14UDSCAP (incl. variants)
68-104382-01	Gasket - Blower Shelf (17.5 in.)	1		R951V0403A17M4SCAP, R951V0403A17M4UCAP, R951V0403A17UHUCAP, R951V0603A17M4SCAP, R951V0603A17M4UCAP, R951V0603A17UHUCAP, R951V0703A17M4SCAP (incl. variants)
68-104382-02	Gasket - Blower Shelf (21 in.)	1		R951V0605A21M4SCAP, R951V0705A21M4SCAP, R951V0705A21M4UCAP, R951V0705A21UHUCAP, R951V0855A21M4SCAP, R951V0855B21M4SCAP, R951V1005A21M4SCAP, R951V1005A21M4UCAP, R951V1005A21UHUCAP (incl. variants)
68-104382-03	Gasket - Blower Shelf (24.5 in.)	1		R951V1155A24M4SCAP (incl. variants)
68-104151-01	Gasket - Condensate Trap	1		

Part No.	Description	Qty	Replaced By	Fits Models
AE-61951-53	Gasket - Door	1		R951V0403A14M4SCAP, R951V0403A14UDSCAP (incl. variants)
AE-61951-54	Gasket - Door (17.5 in.)	1		R951V0403A17M4SCAP, R951V0403A17M4UCAP, R951V0403A17UHUCAP, R951V0603A17M4SCAP, R951V0603A17M4UCAP, R951V0603A17UHUCAP, R951V0703A17M4SCAP (incl. variants)
AE-61951-55	Gasket - Door (21 in.)	1		R951V0605A21M4SCAP, R951V0705A21M4SCAP, R951V0705A21M4UCAP, R951V0705A21UHUCAP, R951V0855A21M4SCAP, R951V0855B21M4SCAP, R951V1005A21M4SCAP, R951V1005A21M4UCAP, R951V1005A21UHUCAP (incl. variants)
AE-61951-56	Gasket - Door (24.5 in.)	1		R951V1155A24M4SCAP (incl. variants)
68-104125-04	Gasket - Graphite 14.0 Coil/Transition	1		R951V0403A14M4SCAP, R951V0403A14UDSCAP (incl. variants)
68-104126-04	Gasket - Graphite 14.0 Trans Back/Front	1		R951V0403A14M4SCAP, R951V0403A14UDSCAP (incl. variants)
68-104152-01	Gasket - Induced Draft Blower	1		All models
68-22079-03	Gasket - Neoprene (1/16 in. x 3/4 in.)	1	OBSOLETE	R951V0403A17M4SCAP, R951V0403A17M4UCAP, R951V0403A17UHUCAP, R951V0603A17M4SCAP, R951V0603A17M4UCAP, R951V0603A17UHUCAP, R951V0605A21M4SCAP, R951V0703A17M4SCAP, R951V0705A21M4SCAP, R951V0705A21M4UCAP, R951V0705A21UHUCAP, R951V0855A21M4SCAP, R951V0855B21M4SCAP, R951V1005A21M4SCAP, R951V1005A21M4UCAP, R951V1005A21UHUCAP, R951V1155A24M4SCAP (incl. variants)
68-22079-85	Gasket - Neoprene (1/8 in. x 3/4 in.) - 100 ft. Roll	1/2		All models
68-105341-01	Gasket Venturi Assembly	1		R951V0403A17M4UCAP, R951V0403A17UHUCAP, R951V0603A17M4UCAP, R951V0603A17UHUCAP, R951V0705A21M4UCAP, R951V0705A21UHUCAP, R951V1005A21M4UCAP, R951V1005A21UHUCAP
56-22114-06	Grommet - Gas Pipe	1		All models
56-106981-01	Grommet, Venturi Housing	1		R951V0403A17M4UCAP, R951V0403A17UHUCAP, R951V0603A17M4UCAP, R951V0603A17UHUCAP, R951V0705A21M4UCAP, R951V0705A21UHUCAP, R951V1005A21M4UCAP, R951V1005A21UHUCAP
63-17189-03	Hex Nut, 1/4-20, w/External Tooth Lock Washer	1		All models
10-61885-03	Ignitor Bracket	1		R951V0403A14M4SCAP, R951V0403A14UDSCAP (incl. variants)
AE-61885-02	Ignitor Bracket	1		R951V0403A17M4SCAP, R951V0603A17M4SCAP, R951V0605A21M4SCAP, R951V0703A17M4SCAP, R951V0705A21M4SCAP, R951V0855A21M4SCAP, R951V0855B21M4SCAP, R951V1005A21M4SCAP, R951V1155A24M4SCAP (incl. variants)
68-105315-02	Ignitor Gasket	1		R951V0403A17M4UCAP, R951V0403A17UHUCAP, R951V0603A17M4UCAP, R951V0603A17UHUCAP, R951V0705A21M4UCAP, R951V0705A21UHUCAP, R951V1005A21M4UCAP, R951V1005A21UHUCAP
68-103536-01	Insulation - Foil Back	1		R951V0403A17M4SCAP, R951V0603A17M4SCAP, R951V0703A17M4SCAP (incl. variants)
68-103536-02	Insulation - Foil Back	1		R951V0605A21M4SCAP, R951V0705A21M4SCAP, R951V0855A21M4SCAP, R951V0855B21M4SCAP, R951V1005A21M4SCAP (incl. variants)
68-103536-03	Insulation - Foil Back	1		R951V1155A24M4SCAP (incl. variants)
68-103536-04	Insulation - Foil Black	1		R951V0403A14M4SCAP, R951V0403A14UDSCAP (incl. variants)
68-103537-01	Insulation - Sound	1		R951V0403A17M4SCAP, R951V0403A17M4UCAP, R951V0403A17UHUCAP, R951V0603A17M4SCAP, R951V0603A17M4UCAP, R951V0603A17UHUCAP, R951V0703A17M4SCAP (incl. variants)
68-103537-02	Insulation - Sound	1		R951V0605A21M4SCAP, R951V0705A21M4SCAP, R951V0705A21M4UCAP, R951V0705A21UHUCAP, R951V0855A21M4SCAP, R951V0855B21M4SCAP, R951V1005A21M4SCAP, R951V1005A21M4UCAP, R951V1005A21UHUCAP (incl. variants)
68-103537-03	Insulation - Sound	1		R951V1155A24M4SCAP (incl. variants)

Part No.	Description	Qty	Replaced By	Fits Models
68-103537-04	Insulation - Sound	1		R951V0403A14M4SCAP, R951V0403A14UDSCAP (incl. variants)
68-103535-09	Insulation - Top Plate 14.0	1		R951V0403A14M4SCAP, R951V0403A14UDSCAP (incl. variants)
AE-67925-01	Insulation Retainer	1		All models
AE-61475-03	Junction Box	1		All models
AE-61476-03	Juncton Box Cover	1		All models
PD644035	Latch & Handle Kit - Gas Furnace (Gray)	1		
64-104352-01	Latch Cam	1		All models
64-104351-03	Latch Handle/Stud (Gray)	1		All models
AE-104192-01	Left Jacket Baffle	1		R951V0603A17M4UCAP, R951V0603A17UHUCAP, R951V0703A17M4SCAP, R951V1005A21M4SCAP, R951V1005A21M4UCAP, R951V1005A21UHUCAP (incl. variants)
AE-104192-02	Left Jacket Baffle	1		R951V0403A17M4SCAP (incl. variants)
AE-104192-03	Left Jacket Baffle	1		R951V0403A17M4UCAP, R951V0403A17UHUCAP, R951V0603A17M4SCAP, R951V0705A21M4SCAP (incl. variants)
AE-104192-04	Left Jacket Baffle	1		R951V0705A21M4UCAP, R951V0705A21UHUCAP, R951V0855A21M4SCAP, R951V0855B21M4SCAP (incl. variants)
AE-104192-06	Left Jacket Baffle	1		R951V1155A24M4SCAP (incl. variants)
63-101978-01	Machine Screw, 1/4-20 x 1 in.	1/2		All models
81-104526-01	Manifold	1		R951V0403A17M4SCAP (incl. variants)
81-104526-02	Manifold	1		R951V0603A17M4SCAP, R951V0605A21M4SCAP (incl. variants)
81-104526-03	Manifold	1		R951V0703A17M4SCAP, R951V0705A21M4SCAP (incl. variants)
81-104526-04	Manifold	1		R951V0855A21M4SCAP, R951V0855B21M4SCAP (incl. variants)
81-104526-05	Manifold	1		R951V1005A21M4SCAP (incl. variants)
81-104526-06	Manifold	1		R951V1155A24M4SCAP (incl. variants)
81-104526-08	Manifold (90+) - 3 Cells	1		R951V0403A14M4SCAP, R951V0403A14UDSCAP (incl. variants)
81-109093-01	Manifold Orifice Assembly	1		R951V0403A17M4UCAP, R951V0403A17UHUCAP
81-109093-02	Manifold Orifice Assembly	1		R951V0603A17M4UCAP, R951V0603A17UHUCAP
81-109093-03	Manifold Orifice Assembly	1		R951V0705A21M4UCAP, R951V0705A21UHUCAP
81-109093-04	Manifold Orifice Assembly	1		R951V1005A21M4UCAP, R951V1005A21UHUCAP
81-40709-03	Nipple - Black Pipe (1/8 in. x 2 in. long)	1		R951V0403A17M4UCAP, R951V0403A17UHUCAP, R951V0603A17M4UCAP, R951V0603A17UHUCAP, R951V0705A21M4UCAP, R951V0705A21UHUCAP, R951V1005A21M4UCAP, R951V1005A21UHUCAP
68-104386-02	O-Ring	1		R951V0403A14M4SCAP, R951V0403A14UDSCAP, R951V0403A17M4SCAP, R951V0603A17M4SCAP, R951V0605A21M4SCAP, R951V0703A17M4SCAP, R951V0705A21M4SCAP, R951V0855A21M4SCAP, R951V0855B21M4SCAP, R951V1005A21M4SCAP, R951V1155A24M4SCAP (incl. variants)
AS-104042-01X	Panel/Label Kit	1		R951V0403A17M4SCAP, R951V0603A17M4SCAP, R951V0703A17M4SCAP (incl. variants)
AS-104043-01X	Panel/Label Kit	1		R951V0403A17M4SCAP, R951V0603A17M4SCAP, R951V0703A17M4SCAP (incl. variants)
68-104446-01	Parts Bag	1		R951V0403A14M4SCAP, R951V0403A14UDSCAP, R951V0403A17M4SCAP, R951V0603A17M4SCAP, R951V0605A21M4SCAP, R951V0703A17M4SCAP, R951V0705A21M4SCAP, R951V0855A21M4SCAP, R951V0855B21M4SCAP, R951V1005A21M4SCAP, R951V1155A24M4SCAP (incl. variants)
68-104446-02	Parts Bag - 90+ ULN Furnace	1		R951V0403A17M4UCAP, R951V0403A17UHUCAP, R951V0603A17M4UCAP, R951V0603A17UHUCAP, R951V0705A21M4UCAP, R951V0705A21UHUCAP, R951V1005A21M4UCAP, R951V1005A21UHUCAP

Part No.	Description	Qty	Replaced By	Fits Models
AE-104190-01	Rear Jacket Baffle	1		R951V0403A17M4SCAP, R951V0403A17M4UCAP, R951V0403A17UHUCAP, R951V0603A17M4SCAP, R951V0603A17M4UCAP, R951V0603A17UHUCAP, R951V0703A17M4SCAP (incl. variants)
AE-104190-02	Rear Jacket Baffle	1		R951V0605A21M4SCAP, R951V0705A21M4SCAP, R951V0705A21M4UCAP, R951V0705A21UHUCAP, R951V0855A21M4SCAP, R951V0855B21M4SCAP, R951V1005A21M4SCAP, R951V1005A21M4UCAP, R951V1005A21UHUCAP (incl. variants)
AE-104190-03	Rear Jacket Baffle	1		R951V1155A24M4SCAP (incl. variants)
45-104315-01	Rectangular Flush Mount Plug	1		All models
68-105460-03	Refractory Inserts (Tall) 1-3/8 in. Tubes	1		R951V0403A17M4UCAP, R951V0403A17UHUCAP, R951V0603A17M4UCAP, R951V0603A17UHUCAP, R951V0705A21M4UCAP, R951V0705A21UHUCAP, R951V1005A21M4UCAP, R951V1005A21UHUCAP
AE-104191-01	Right Jacket Baffle	1		R951V0603A17M4UCAP, R951V0603A17UHUCAP, R951V0703A17M4SCAP, R951V1005A21M4SCAP, R951V1005A21M4UCAP, R951V1005A21UHUCAP (incl. variants)
AE-104191-02	Right Jacket Baffle	1		R951V0403A17M4SCAP (incl. variants)
AE-104191-03	Right Jacket Baffle	1		R951V0403A17M4UCAP, R951V0403A17UHUCAP, R951V0603A17M4SCAP (incl. variants)
AE-104191-04	Right Jacket Baffle	1		R951V0705A21M4SCAP, R951V0705A21M4UCAP, R951V0705A21UHUCAP, R951V0855A21M4SCAP, R951V0855B21M4SCAP (incl. variants)
AE-104191-06	Right Jacket Baffle	1		R951V1155A24M4SCAP (incl. variants)
45-103596-01	Round Flush Mount Plug	1		All models
45-103596-03	Round Flush Mount Plug	1		All models
45-103596-04	Round Flush Mount Plug	1		All models
45-103596-06	Round Flush Mount Plug	1		All models
56-104377-01	Rubber Plug	1		R951V0403A14M4SCAP, R951V0403A14UDSCAP, R951V0403A17UHUCAP, R951V0605A21M4SCAP, R951V0855B21M4SCAP (incl. variants)
63-105574-04	Screw	1		R951V0403A17M4UCAP, R951V0403A17UHUCAP, R951V0603A17M4UCAP, R951V0603A17UHUCAP, R951V0705A21M4UCAP, R951V0705A21UHUCAP, R951V1005A21M4UCAP, R951V1005A21UHUCAP
63-105574-05	Screw	1		R951V0403A17M4UCAP, R951V0403A17UHUCAP, R951V0603A17M4UCAP, R951V0603A17UHUCAP, R951V0705A21M4UCAP, R951V0705A21UHUCAP, R951V1005A21M4UCAP, R951V1005A21UHUCAP
63-104375-08	Screw - Hex Head - 8-32 x 1 in. Machine Thread	1		R951V0403A14M4SCAP, R951V0403A14UDSCAP (incl. variants)
63-103934-02	Screw - Plastic Threading Hex Head (8-18 x .375)	1		All models
63-104375-02	Screw - Sheet Metal - 8-32 x 0.4 in.	1		R951V0403A14M4SCAP, R951V0403A14UDSCAP, R951V0403A17M4SCAP, R951V0603A17M4SCAP, R951V0605A21M4SCAP, R951V0703A17M4SCAP, R951V0705A21M4SCAP, R951V0855A21M4SCAP, R951V0855B21M4SCAP, R951V1005A21M4SCAP, R951V1155A24M4SCAP (incl. variants)
63-105574-01	Screw - Sheet Metal - 8-32 x 1 in.	1		R951V0403A17M4UCAP, R951V0403A17UHUCAP, R951V0603A17M4UCAP, R951V0603A17UHUCAP, R951V0705A21M4UCAP, R951V0705A21UHUCAP, R951V1005A21M4UCAP, R951V1005A21UHUCAP
63-104523-01	Screw - Sheet Metal - 8-32 x 1/2 in.	1/3/4		All models
63-104375-01	Screw - Sheet Metal - 8-32 x 3.3 in.	1/2		R951V0403A17M4SCAP, R951V0403A17M4UCAP, R951V0403A17UHUCAP, R951V0603A17M4SCAP, R951V0603A17M4UCAP, R951V0603A17UHUCAP, R951V0605A21M4SCAP, R951V0703A17M4SCAP, R951V0705A21M4SCAP, R951V0705A21M4UCAP, R951V0705A21UHUCAP, R951V0855A21M4SCAP, R951V0855B21M4SCAP, R951V1005A21M4SCAP, R951V1005A21M4UCAP, R951V1005A21UHUCAP, R951V1155A24M4SCAP (incl. variants)

Part No.	Description	Qty	Replaced By	Fits Models
63-104375-06	Screw - Sheet Metal - 8-32 x 5/16 in.	1		R951V0403A17M4UCAP, R951V0403A17UHUCAP, R951V0603A17M4UCAP, R951V0603A17UHUCAP, R951V0705A21M4UCAP, R951V0705A21UHUCAP, R951V1005A21M4UCAP, R951V1005A21UHUCAP
63-22153-11	Screws - Sheet Metal. 8-18 x 3/4 in.	1/2		All models
67-24036-01	Sealant	1		All models
63-106762-01	Sheet Metal Screw - Jacket Trim Head Thread Point	1		All models
63-22338-02	Sheet Metal Screw, 6-20 x 1/4 in.	1		R951V0403A14M4SCAP, R951V0403A14UDSCAP, R951V0403A17M4SCAP, R951V0603A17M4SCAP, R951V0605A21M4SCAP, R951V0703A17M4SCAP, R951V0705A21M4SCAP, R951V0855A21M4SCAP, R951V0855B21M4SCAP, R951V1005A21M4SCAP, R951V1155A24M4SCAP (incl. variants)
63-22153-05	Sheet Metal Screw, 8-18 x 3/8 in.	1/2		R951V0403A14M4SCAP, R951V0403A14UDSCAP, R951V0403A17M4SCAP, R951V0603A17M4SCAP, R951V0605A21M4SCAP, R951V0703A17M4SCAP, R951V0705A21M4SCAP, R951V0855A21M4SCAP, R951V0855B21M4SCAP, R951V1005A21M4SCAP, R951V1155A24M4SCAP (incl. variants)
63-24368-03	Sheet Metal Screw, 8-18 x 1/2 in.	1		All models
63-24368-01	Sheet Metal Screw, 8-18 x 1/4 in.	1/2/3		All models
68-21893-04	Sight Glass	1		All models
79-21491-03	Silicone Rubber Tubing (Bulk - Non-Salable)	1		R951V0403A17M4UCAP, R951V0403A17UHUCAP, R951V0603A17M4UCAP, R951V0603A17UHUCAP, R951V0705A21M4UCAP, R951V0705A21UHUCAP, R951V1005A21M4UCAP, R951V1005A21UHUCAP
45-18515-01	Snap-In Bushing - Conductor Protection	1		All models
63-22429-01	Stainless Steel Sheet Metal Screw, 8-18 x 1/2 in.	1/2/3		All models
AE-61951-51	Stripping - Cut Length	1		All models
AE-104127-01	Support - Heat Exchanger	1		R951V0403A17M4SCAP, R951V0403A17M4UCAP, R951V0403A17UHUCAP, R951V0603A17M4SCAP, R951V0603A17M4UCAP, R951V0603A17UHUCAP, R951V0703A17M4SCAP (incl. variants)
AE-104127-02	Support - Heat Exchanger	1		R951V0605A21M4SCAP, R951V0705A21M4SCAP, R951V0705A21M4UCAP, R951V0705A21UHUCAP, R951V0855A21M4SCAP, R951V0855B21M4SCAP, R951V1005A21M4SCAP, R951V1005A21M4UCAP, R951V1005A21UHUCAP (incl. variants)
AE-104127-03	Support - Heat Exchanger	1		R951V1155A24M4SCAP (incl. variants)
42-22692-13	Switch - Push Button	1		R951V0403A17M4SCAP, R951V0403A17M4UCAP, R951V0603A17M4SCAP, R951V0603A17M4UCAP, R951V0603A17UHUCAP, R951V0703A17M4SCAP, R951V0705A21M4SCAP, R951V0705A21M4UCAP, R951V0705A21UHUCAP, R951V0855A21M4SCAP, R951V0855B21M4SCAP, R951V1005A21M4SCAP, R951V1005A21M4UCAP, R951V1005A21UHUCAP, R951V1155A24M4SCAP (incl. variants)
AS-104134-01	Top Plate Assembly	1		R951V0403A17M4SCAP, R951V0603A17M4SCAP, R951V0703A17M4SCAP (incl. variants)
AS-104134-02	Top Plate Assembly	1		R951V0605A21M4SCAP, R951V0705A21M4SCAP, R951V0855A21M4SCAP, R951V0855B21M4SCAP, R951V1005A21M4SCAP (incl. variants)
AS-104134-03	Top Plate Assembly	1		R951V1155A24M4SCAP (incl. variants)
AS-104134-51	Top Plate Assembly	1		R951V0403A17M4UCAP, R951V0403A17UHUCAP, R951V0603A17M4UCAP, R951V0603A17UHUCAP
AS-104134-52	Top Plate Assembly	1		R951V0705A21M4UCAP, R951V0705A21UHUCAP, R951V1005A21M4UCAP, R951V1005A21UHUCAP
68-104145-04	Transition - Elbow - Outlet Air Upflow	1		R951V0403A14M4SCAP, R951V0403A14UDSCAP (incl. variants)
68-24022-03	Transition - Gasket	1		All models
68-104133-02	Transition - Outlet Air	1		R951V0403A17M4SCAP, R951V0603A17M4SCAP, R951V0605A21M4SCAP, R951V0703A17M4SCAP, R951V0705A21M4SCAP, R951V0855A21M4SCAP, R951V0855B21M4SCAP, R951V1005A21M4SCAP, R951V1155A24M4SCAP (incl. variants)

Part No.	Description	Qty	Replaced By	Fits Models
68-104145-03	Transition - Outlet Air Elbow	1		R951V0403A17M4SCAP, R951V0403A17M4UCAP, R951V0403A17UHUCAP, R951V0603A17M4SCAP, R951V0603A17M4UCAP, R951V0603A17UHUCAP, R951V0605A21M4SCAP, R951V0703A17M4SCAP, R951V0705A21M4SCAP, R951V0705A21M4UCAP, R951V0705A21UHUCAP, R951V0855A21M4SCAP, R951V0855B21M4SCAP, R951V1005A21M4SCAP, R951V1005A21M4UCAP, R951V1005A21UHUCAP, R951V1155A24M4SCAP (incl. variants)
68-104133-05	Transition - Outlet Air Upflow	1		R951V0403A17M4UCAP, R951V0403A17UHUCAP, R951V0603A17M4UCAP, R951V0603A17UHUCAP, R951V0705A21M4UCAP, R951V0705A21UHUCAP, R951V1005A21M4UCAP, R951V1005A21UHUCAP
68-104133-06	Transition - Outlet Air Upflow	1		R951V0403A14M4SCAP, R951V0403A14UDSCAP (incl. variants)
54-106319-01	Venturi - Filter	1		R951V0403A17M4UCAP, R951V0403A17UHUCAP, R951V0603A17M4UCAP, R951V0603A17UHUCAP, R951V0705A21M4UCAP, R951V0705A21UHUCAP, R951V1005A21M4UCAP, R951V1005A21UHUCAP
AS-105509-14	Venturi Assembly	1		R951V0403A17M4UCAP, R951V0403A17UHUCAP
AS-105509-15	Venturi Assembly	1		R951V0603A17M4UCAP, R951V0603A17UHUCAP, R951V0705A21M4UCAP, R951V0705A21UHUCAP
AS-105509-16	Venturi Assembly	1		R951V1005A21M4UCAP, R951V1005A21UHUCAP
68-106320-02	Venturi Housing Cover	1		R951V0403A17M4UCAP, R951V0403A17UHUCAP, R951V0603A17M4UCAP, R951V0603A17UHUCAP, R951V0705A21M4UCAP, R951V0705A21UHUCAP, R951V1005A21M4UCAP, R951V1005A21UHUCAP
68-105507-03	Venturi Housing Ultra Low Nox	1		R951V0403A17M4UCAP, R951V0403A17UHUCAP, R951V0603A17M4UCAP, R951V0603A17UHUCAP, R951V0705A21M4UCAP, R951V0705A21UHUCAP, R951V1005A21M4UCAP, R951V1005A21UHUCAP
68-107871-03	Venturi Insert Choke DIA .650	1		R951V0403A17M4UCAP, R951V0403A17UHUCAP
68-107871-02	Venturi Insert Choke DIA .850	1		R951V0603A17M4UCAP, R951V0603A17UHUCAP, R951V0705A21M4UCAP, R951V0705A21UHUCAP
68-107871-01	Venturi Insert Choke DIA 1.20	1		R951V1005A21M4UCAP, R951V1005A21UHUCAP
56-103685-01	Vinyl Cap	1		R951V0403A14M4SCAP, R951V0403A14UDSCAP, R951V0403A17M4SCAP, R951V0403A17M4UCAP, R951V0603A17M4SCAP, R951V0603A17M4UCAP, R951V0605A21M4SCAP, R951V0703A17M4SCAP, R951V0705A21M4SCAP, R951V0705A21M4UCAP, R951V0855A21M4SCAP, R951V0855B21M4SCAP, R951V1005A21M4SCAP, R951V1005A21M4UCAP, R951V1155A24M4SCAP (incl. variants)
56-103685-02	Vinyl Cap - .490 in.	1		R951V0403A17UHUCAP, R951V0603A17UHUCAP, R951V0705A21UHUCAP, R951V1005A21UHUCAP
63-26198-02	Washer - Flat (Fender)	1/2		All models
68-104346-01K	Water Trap Kit - Condensate Drain	1		R951V0403A14M4SCAP, R951V0403A14UDSCAP, R951V0403A17M4SCAP, R951V0603A17M4SCAP, R951V0605A21M4SCAP, R951V0703A17M4SCAP, R951V0705A21M4SCAP, R951V0855A21M4SCAP, R951V0855B21M4SCAP, R951V1005A21M4SCAP, R951V1155A24M4SCAP (incl. variants)
AE-104385-01	Water Trap Mounting Bracket	1		R951V0403A14M4SCAP, R951V0403A14UDSCAP, R951V0403A17M4SCAP, R951V0603A17M4SCAP, R951V0605A21M4SCAP, R951V0703A17M4SCAP, R951V0705A21M4SCAP, R951V0855A21M4SCAP, R951V0855B21M4SCAP, R951V1005A21M4SCAP, R951V1155A24M4SCAP (incl. variants)
64-17606-01	Wire & Cable Tie - Nylon Black - 8 in.	1		All models