Rheem R962V Gas Furnace Replacement Parts List

Parts list RP-RHM-R962V | Updated Nov 2026 | 234 parts | 22 model numbers

Genuine Rheem OEM part numbers for the models listed below, compiled from Rheem Manufacturing's service parts catalog. Quantities are per unit. Where Rheem has replaced a part number, the current number is shown under Replaced By. Always confirm the full model and serial number of the unit before ordering.

Models covered

R962V0403A14M4SCAP, R962V0403A14M4SCAPRHC, R962V0403A14UDSCAP, R962V0403A14UDSCAPRHC, R962V0403A17M4SCAP, R962V0403A17M4SCAPRHC, R962V0603A17M4SCAP, R962V0603A17M4SCAPRHC, R962V0605A21M4SCAP, R962V0605A21M4SCAPRHC, R962V0703A17M4SCAP, R962V0703A17M4SCAPRHC, R962V0705A21M4SCAP, R962V0705A21M4SCAPRHC, R962V0855A21M4SCAP, R962V0855A21M4SCAPRHC, R962V0855B21M4SCAP, R962V0855B21M4SCAPRHC, R962V1005A21M4SCAP, R962V1005A21M4SCAPRHC, R962V1155A24M4SCAP, R962V1155A24M4SCAPRHC

R962V parts breakdown: Exploded View

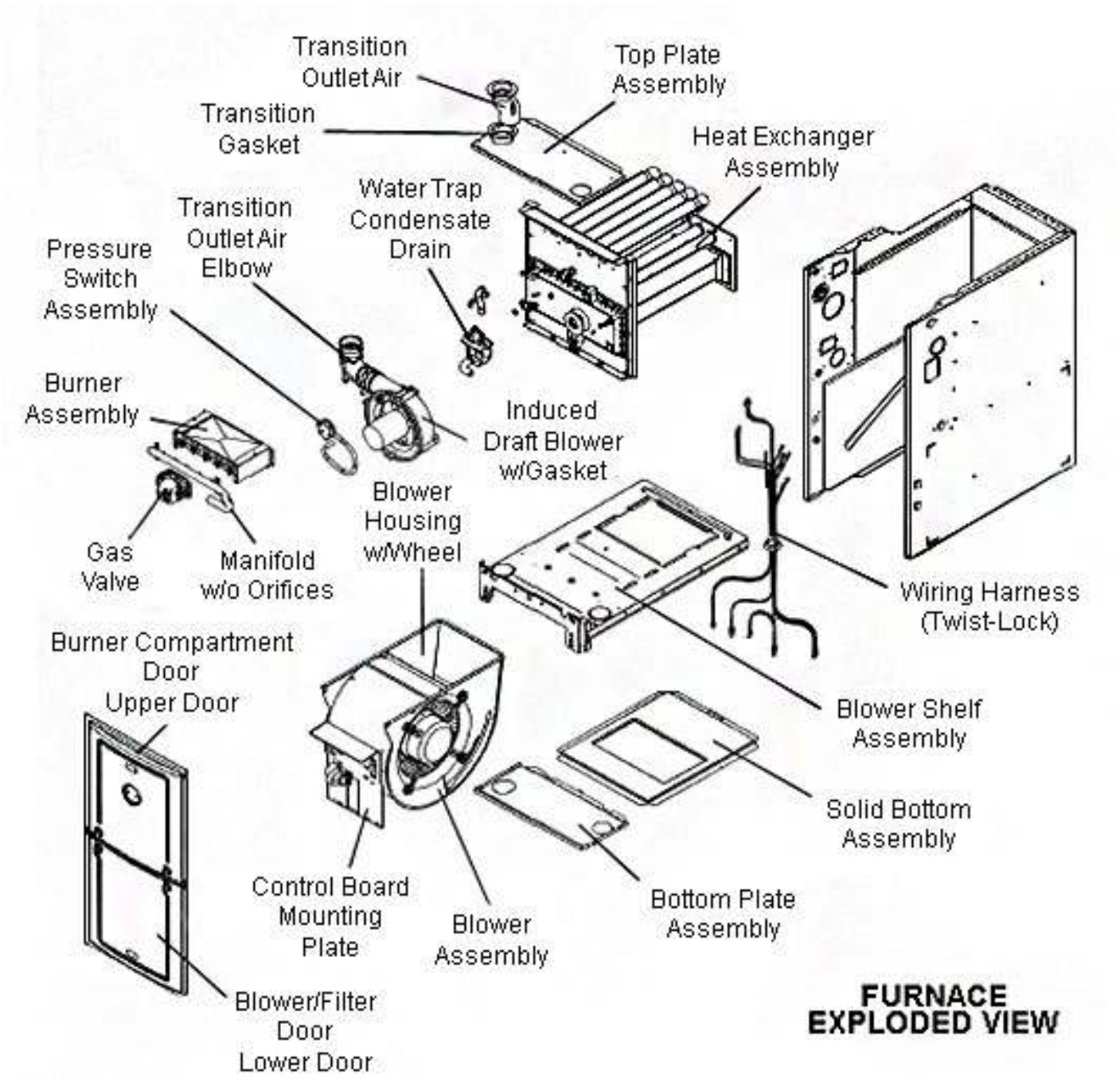

R962V parts breakdown: Junction Box

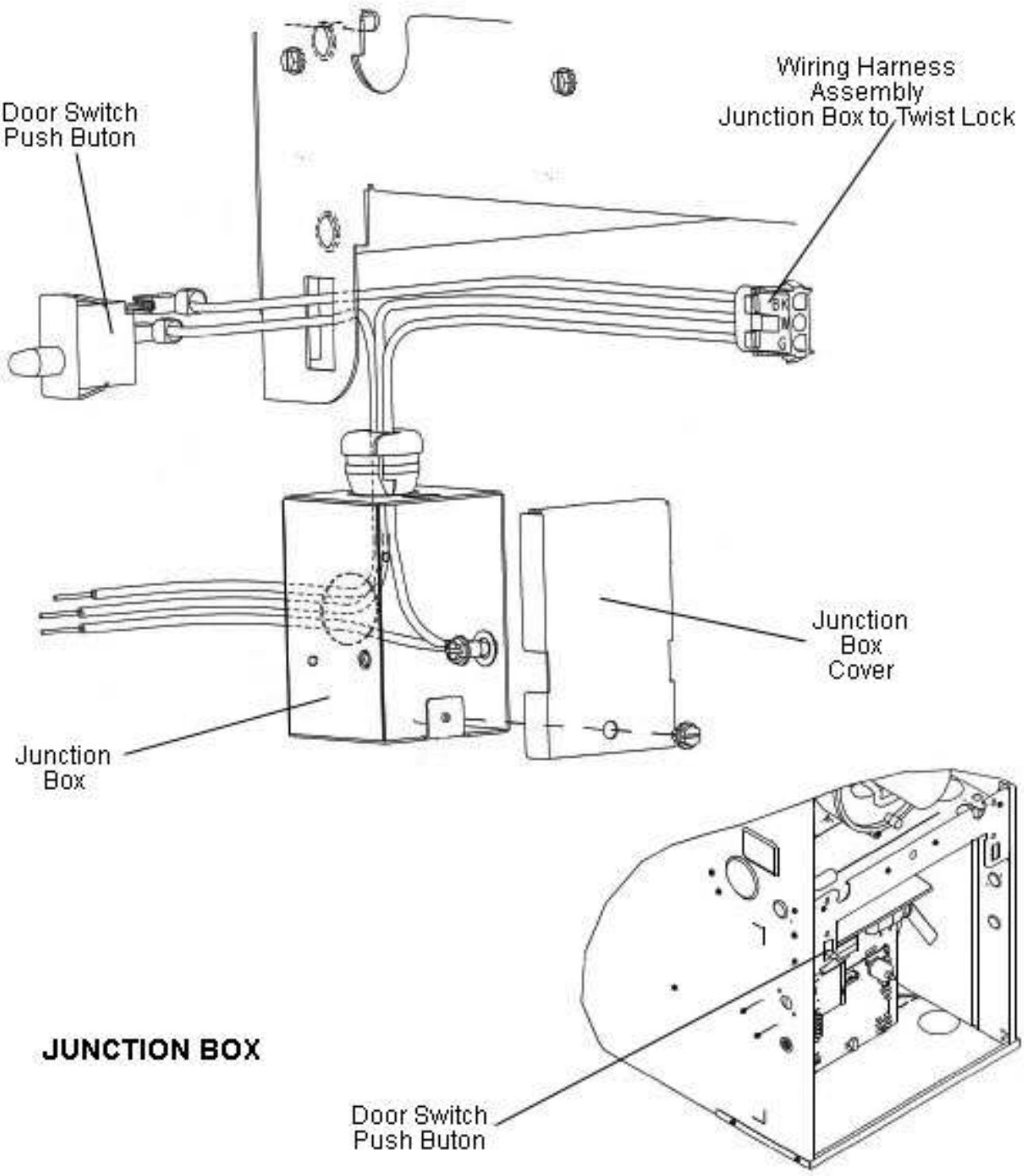

JUNCTION BOX

R962V parts breakdown: Induced Draft Blower

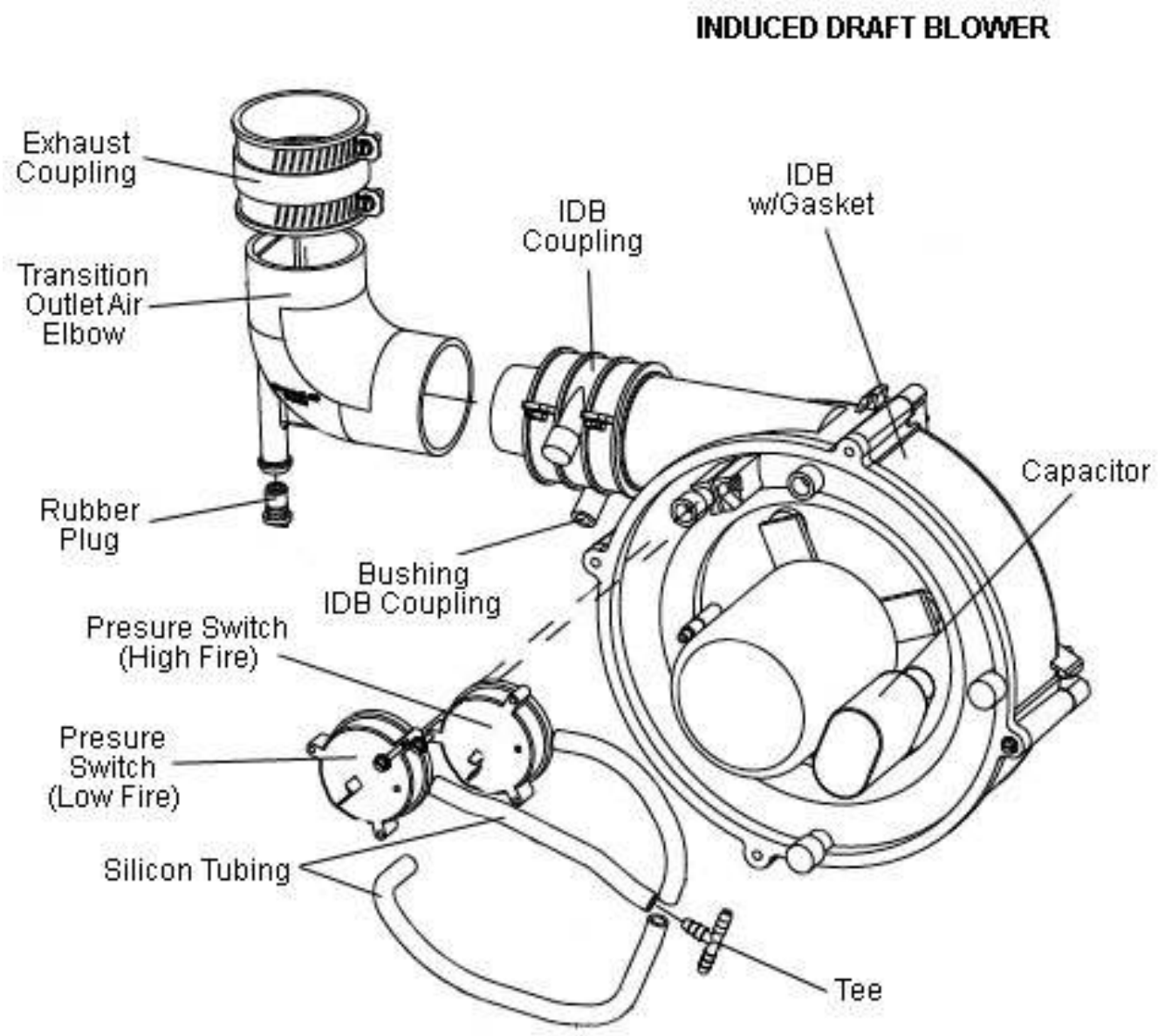

R962V parts breakdown: Blower Assembly

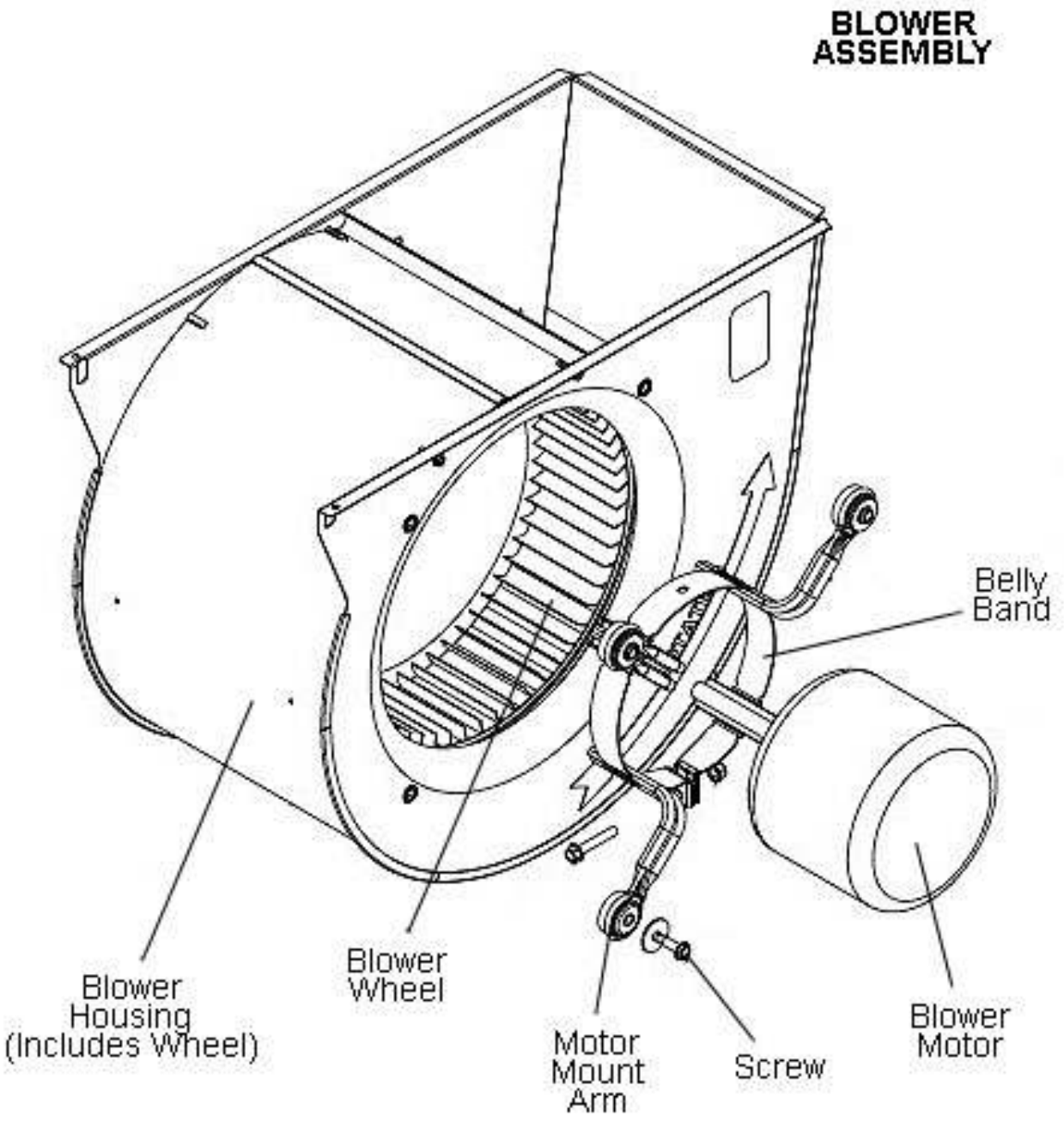

R962V parts breakdown: Control Board Mounting

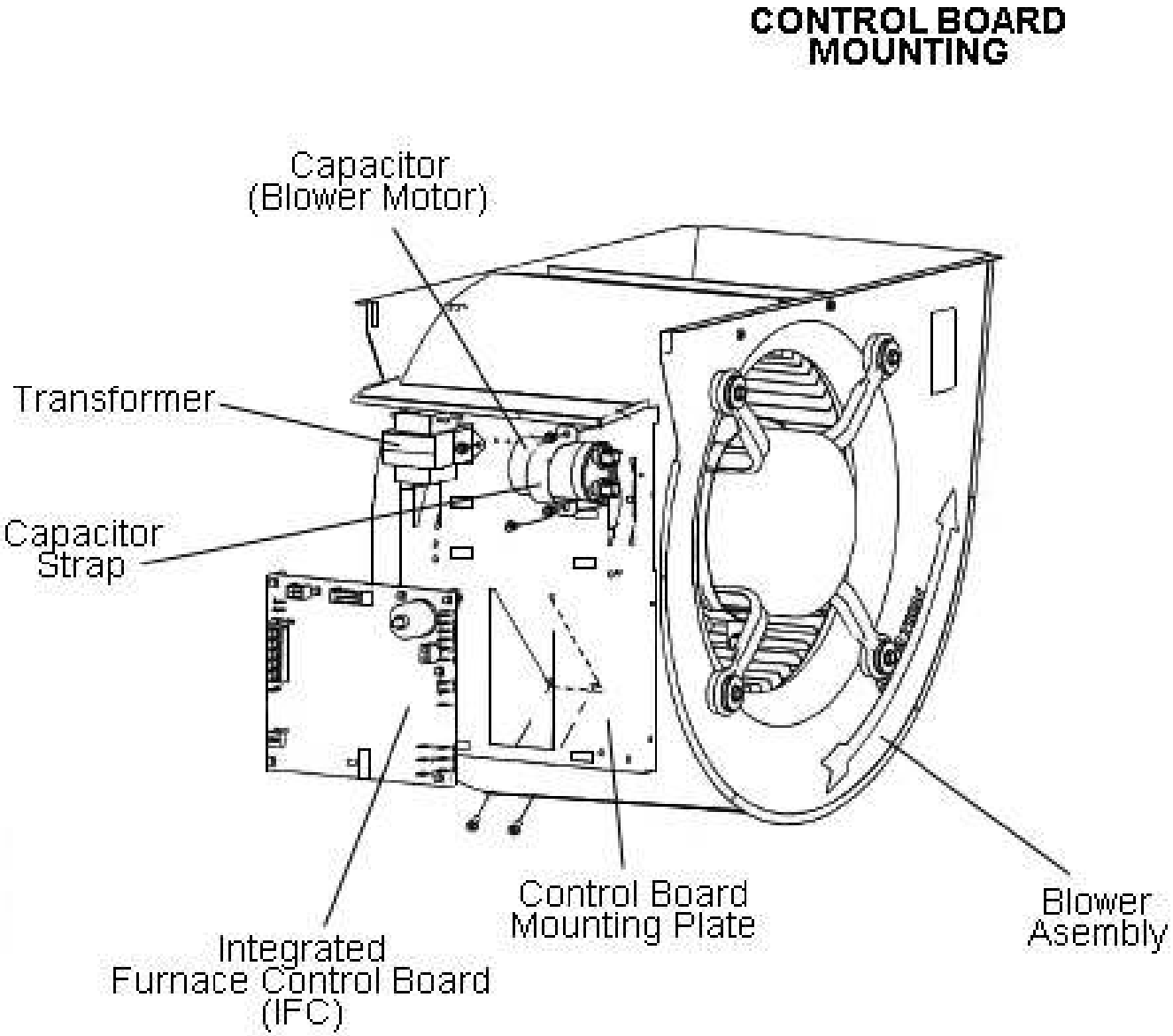

R962V parts breakdown: Burner Assembly

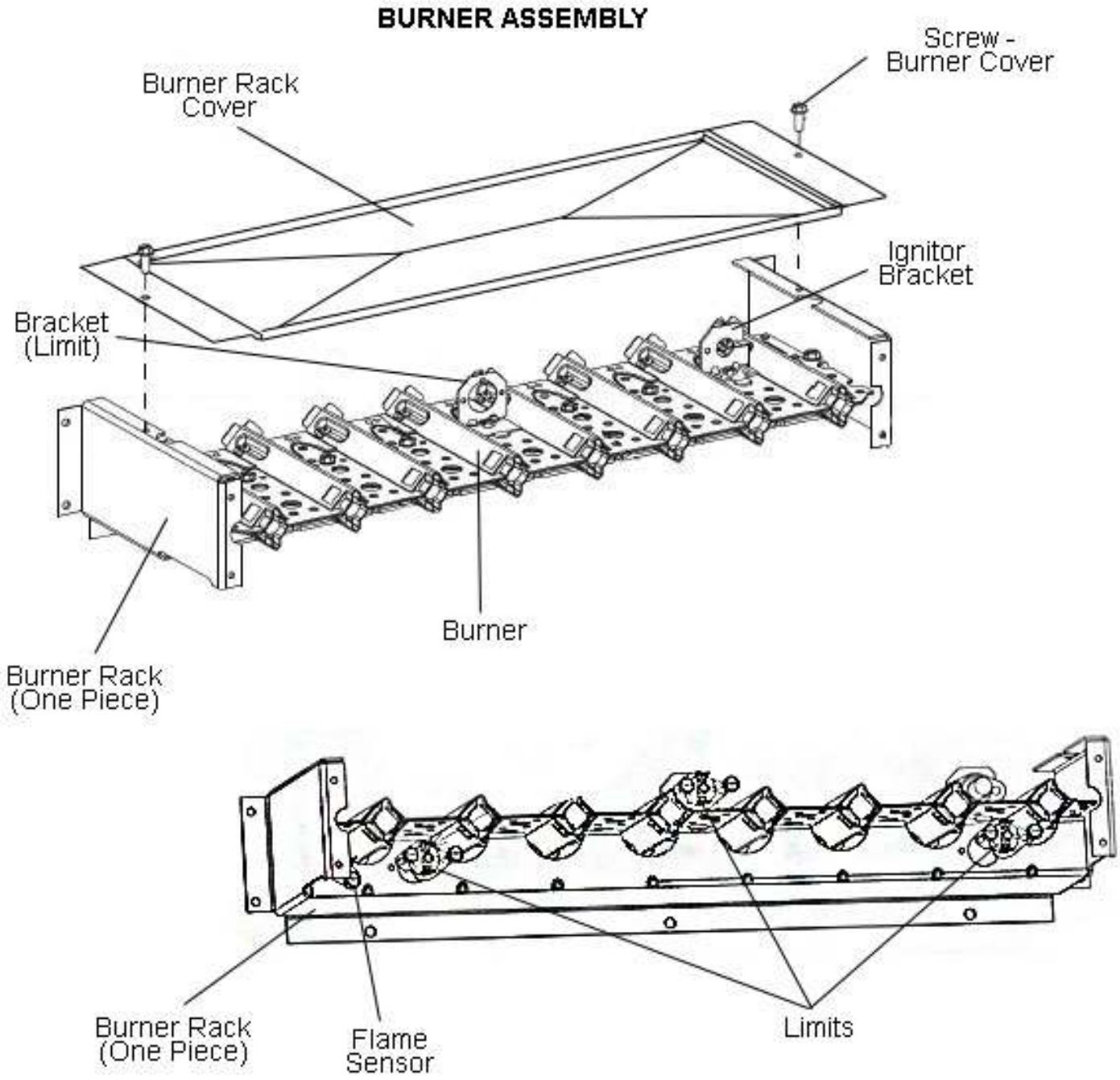

R962V parts breakdown: Heat Exchanger - Collector Box

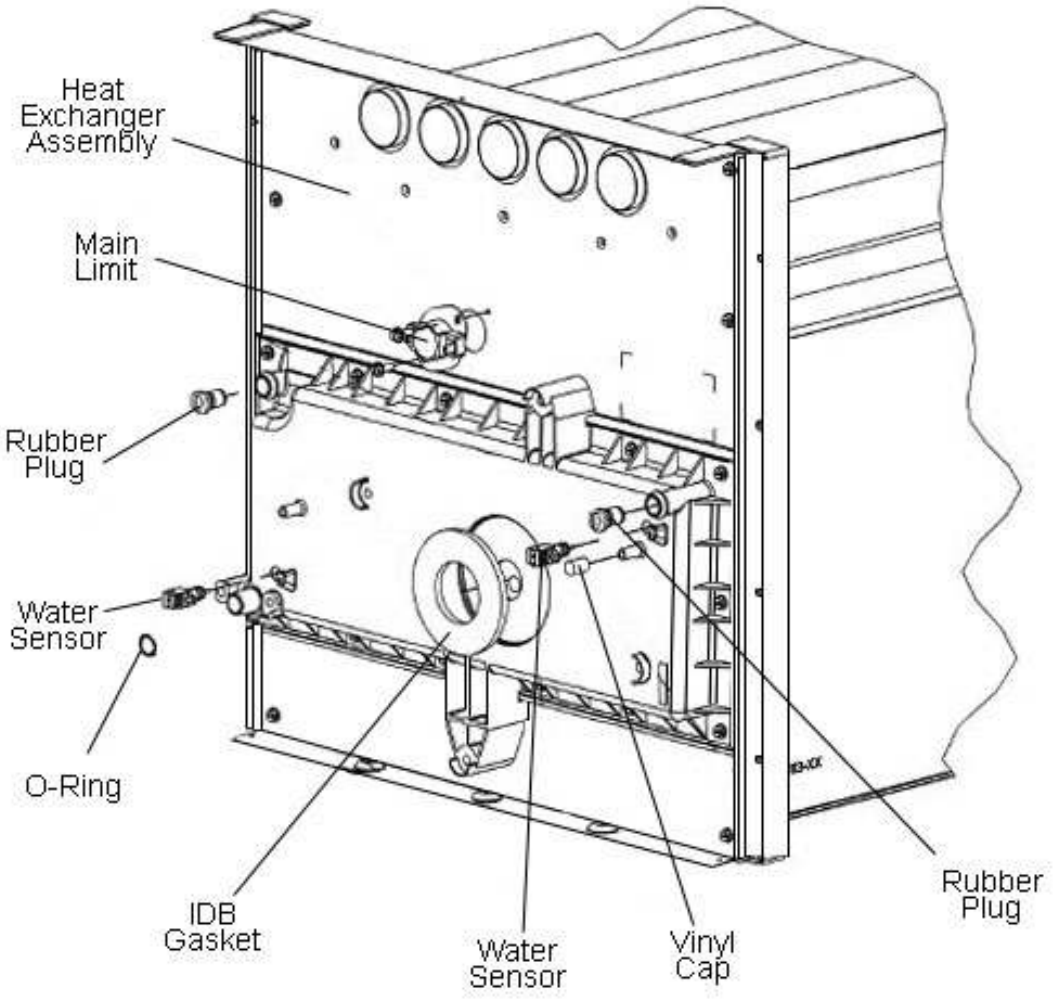

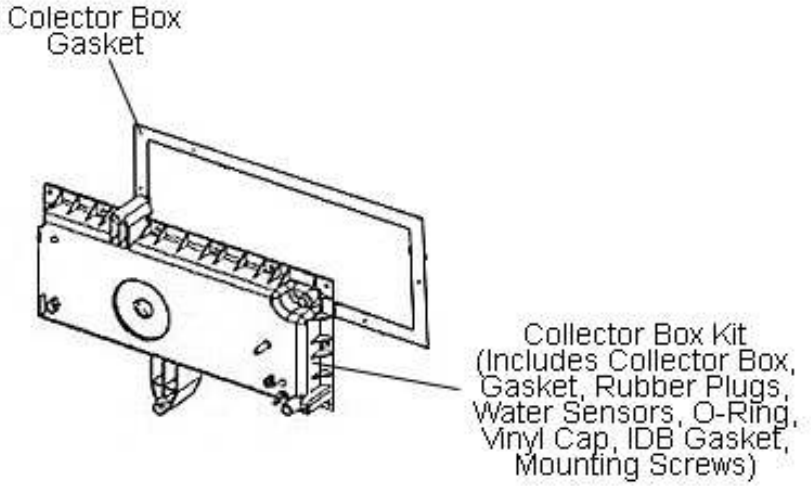

R962V parts breakdown: Trap - Hose Assembly

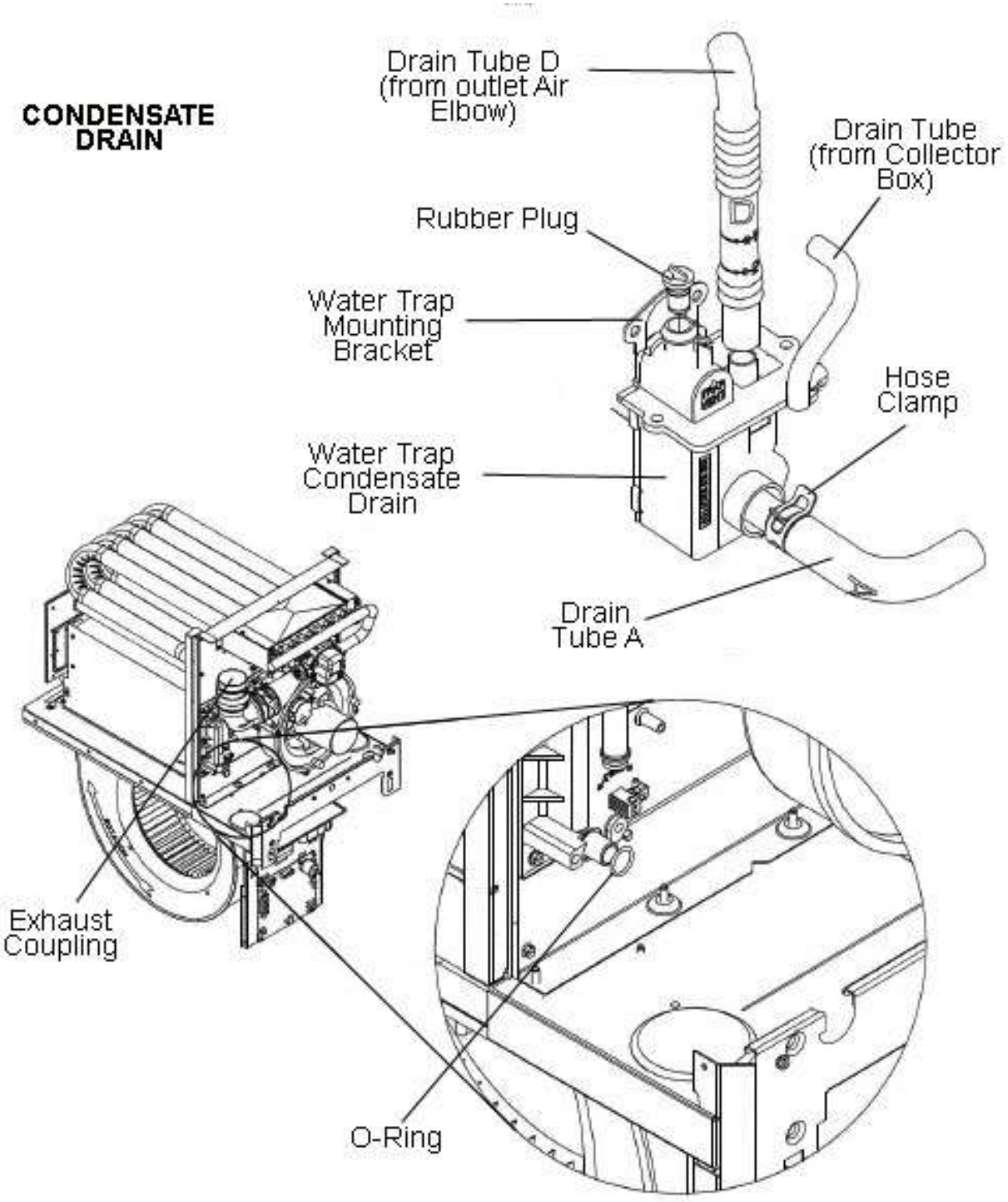

Motors & fans

Part No.	Description	Qty	Replaced By	Fits Models
AS-108522-01	Blower Assembly	1		R962V0403A17M4SCAP (incl. variants)
AS-108523-01	Blower Assembly	1		R962V0605A21M4SCAP, R962V0705A21M4SCAP, R962V0855A21M4SCAP, R962V0855B21M4SCAP, R962V1005A21M4SCAP (incl. variants)
70-104182-20	Blower Housing Assembly 11X6 CV	1		R962V0403A14M4SCAP, R962V0403A14UDSCAP (incl. variants)
70-104182-03	Housing w/Blower Wheel	1		R962V0403A17M4SCAP (incl. variants)
70-104182-05	Housing w/Blower Wheel	1		R962V0603A17M4SCAP, R962V0703A17M4SCAP (incl. variants)
70-104182-07	Housing w/Blower Wheel	1		R962V0605A21M4SCAP, R962V0705A21M4SCAP, R962V0855A21M4SCAP, R962V0855B21M4SCAP, R962V1005A21M4SCAP (incl. variants)
70-104182-09	Housing w/Blower Wheel	1		R962V1155A24M4SCAP (incl. variants)
70-110467-04	Induced Draft Blower - Two Stage	1		R962V0403A14UDSCAP (incl. variants)
70-104157-83	Induced Draft Blower w/Gasket	1		R962V0403A17M4SCAP, R962V0603A17M4SCAP, R962V0605A21M4SCAP, R962V0703A17M4SCAP, R962V0705A21M4SCAP, R962V0855A21M4SCAP, R962V0855B21M4SCAP, R962V1005A21M4SCAP (incl. variants)
70-104157-84	Induced Draft Blower w/Gasket	1		R962V1155A24M4SCAP (incl. variants)
51-108483-01	Motor - SelecTech Gen 3 w/PWM (115V - 1 hp) (Programmed G3)	1		R962V0605A21M4SCAP, R962V0705A21M4SCAP, R962V0855A21M4SCAP, R962V0855B21M4SCAP, R962V1005A21M4SCAP (incl. variants)
51-108483-03	Motor - SelecTech Gen 3 w/PWM (115V - 1 hp) (Programmed G3)	1		R962V1155A24M4SCAP (incl. variants)
51-108481-01	Motor - SelecTech Gen 3 w/PWM (115V - 1/2 hp) (Programmed G3)	1		R962V0403A14M4SCAP, R962V0403A14UDSCAP, R962V0403A17M4SCAP (incl. variants)
51-108481-03	Motor - SelecTech Gen 3 w/PWM (115V - 1/2 hp) (Programmed G3)	1		R962V0603A17M4SCAP, R962V0703A17M4SCAP (incl. variants)
70-19929-10	Motor Mount Arm w/Grommet	1/2		All models
70-19927-04	Motor Mount Band	1		All models

Electrical

Part No.	Description	Qty	Replaced By	Fits Models
43-25134-35	Capacitor - 6/370 Single Oval	1		
62-108462-11	Control Board - M1 Furnace 2-Stage	1		All models
42-22692-09K	Door Switch Kit	1		R962V0403A14M4SCAP, R962V0403A14UDSCAP, R962V0605A21M4SCAP (incl. variants)
ATM-3-5PK	Fuse - 3A Mini Blade Type - Automotive (5 Pack)	1		
ATM-5-5PK	Fuse - 5A Mini Blade Type - Automotive (5 Pack)	1		
45-108279-01	Motor Power and Control Wire Assembly	1		All models
46-24124-06K	Transformer Kit	1		All models
47-104184-01K	Water Sensor Kit	1		All models
45-24371-58	Wire Assembly	1		All models
45-50202-05-M9	Wire Assembly - 14 in. Main Limit	1		R962V0403A14UDSCAP (incl. variants)
45-111045-01	Wire Harness Assembly	1		R962V0403A14UDSCAP (incl. variants)
45-104202-10	Wiring Harness Assembly (Twist-Lock)	1		R962V0403A14M4SCAP, R962V0403A14UDSCAP, R962V0403A17M4SCAP, R962V0603A17M4SCAP, R962V0605A21M4SCAP, R962V0703A17M4SCAP, R962V0705A21M4SCAP, R962V0855A21M4SCAP, R962V0855B21M4SCAP, R962V1005A21M4SCAP (incl. variants)
45-104202-11	Wiring Harness Assembly - Twist-Lock 2 Stage 90+ 112K (Teflon Coated Flame Sense)	1		R962V1155A24M4SCAP (incl. variants)

Valves & switches

Part No.	Description	Qty	Replaced By	Fits Models
47-104465-03	Limit Switch - Auto Reset (Flanged Airstream)	1		R962V0403A14M4SCAP, R962V0403A14UDSCAP (incl. variants)
47-22861-04	Limit Switch - Manual Reset (Flanged Airstream)	1		All models
47-104465-01K	Limit Switch Kit - Auto Reset (Flanged Airstream)	1		R962V0603A17M4SCAP, R962V0605A21M4SCAP, R962V0705A21M4SCAP, R962V0855A21M4SCAP, R962V0855B21M4SCAP (incl. variants)
47-104465-02K	Limit Switch Kit - Auto Reset (Flanged Airstream)	1		R962V0403A17M4SCAP, R962V0703A17M4SCAP, R962V1005A21M4SCAP, R962V1155A24M4SCAP (incl. variants)
42-105499-08	Pressure Switch (-0.30") (Low Fire)	1		R962V0603A17M4SCAP, R962V0703A17M4SCAP, R962V0855A21M4SCAP, R962V1005A21M4SCAP (incl. variants)
42-105583-04	Pressure Switch (-0.40")	1		R962V1005A21M4SCAP (incl. variants)
42-105499-07	Pressure Switch (-0.40") (Low Fire)	1		R962V1155A24M4SCAP (incl. variants)
42-105499-10	Pressure Switch (-0.50") (Low Fire)	1		R962V0605A21M4SCAP, R962V0705A21M4SCAP (incl. variants)
42-105499-05	Pressure Switch (-0.55")	1		R962V0855B21M4SCAP (incl. variants)
42-105583-12	Pressure Switch (-0.55") (High Fire)	1		R962V0855A21M4SCAP (incl. variants)
42-105583-14	Pressure Switch (-0.65) - MPL - 3/16	1		R962V0855B21M4SCAP (incl. variants)
42-105499-09	Pressure Switch (-0.70")	1		R962V0403A17M4SCAP (incl. variants)
42-105583-11	Pressure Switch (-0.70") (High Fire)	1		R962V1155A24M4SCAP (incl. variants)
42-105583-13	Pressure Switch (-0.80") (High Fire)	1		R962V0605A21M4SCAP, R962V0705A21M4SCAP (incl. variants)
42-105583-08	Pressure Switch (-0.90") (High Fire)	1		R962V0403A17M4SCAP (incl. variants)
42-105499-01	Pressure Switch (-1.00")	1		R962V0403A14M4SCAP (incl. variants)
42-105583-07	Pressure Switch (-1.00")	1		R962V0403A14UDSCAP (incl. variants)
42-105499-04K	Pressure Switch Kit (-0.60")	1		R962V0403A14UDSCAP (incl. variants)
42-105583-10K	Pressure Switch Kit (-0.60") (High Fire)	1		R962V0603A17M4SCAP, R962V0703A17M4SCAP (incl. variants)

Gas

Part No.	Description	Qty	Replaced By	Fits Models
60-109386-01	2-Stage Gas Valve - NG	1		R962V0403A17M4SCAP, R962V0603A17M4SCAP, R962V0605A21M4SCAP, R962V0703A17M4SCAP, R962V0705A21M4SCAP, R962V0855A21M4SCAP, R962V0855B21M4SCAP, R962V1005A21M4SCAP, R962V1155A24M4SCAP (incl. variants)
75-104227-07	Burner Assembly	1		R962V0403A14M4SCAP, R962V0403A14UDSCAP (incl. variants)
AS-104123-41	Burner Assembly - 3 Burner	1		R962V0403A17M4SCAP (incl. variants)
AS-104123-42	Burner Assembly - 4 Burner	1		R962V0603A17M4SCAP, R962V0605A21M4SCAP (incl. variants)
AS-104123-43	Burner Assembly - 5 Burner	1		R962V0703A17M4SCAP, R962V0705A21M4SCAP (incl. variants)
AS-104123-44	Burner Assembly - 6 Burner	1		R962V0855A21M4SCAP, R962V0855B21M4SCAP (incl. variants)
AS-104123-45	Burner Assembly - 7 Burner	1		R962V1005A21M4SCAP (incl. variants)
AS-104123-46	Burner Assembly - 8 Burner	1		R962V1155A24M4SCAP (incl. variants)
AS-61984-13	Burner Halves Assembly	1		R962V0403A17M4SCAP (incl. variants)
AS-61984-14	Burner Halves Assembly	1		R962V0603A17M4SCAP, R962V0605A21M4SCAP (incl. variants)
AS-61984-15	Burner Halves Assembly	1		R962V0703A17M4SCAP, R962V0705A21M4SCAP (incl. variants)
AS-61984-16	Burner Halves Assembly	1		R962V0855A21M4SCAP, R962V0855B21M4SCAP (incl. variants)
AS-61984-17	Burner Halves Assembly	1		R962V1005A21M4SCAP (incl. variants)
AS-61984-18	Burner Halves Assembly	1		R962V1155A24M4SCAP (incl. variants)
62-23543-08K	Flame Sensor Kit	1		All models
60-101921-81	Gas Valve	1		R962V0403A14M4SCAP (incl. variants)

Part No.	Description	Qty	Replaced By	Fits Models
AS-104120-01	Heat Exchanger Assembly	1		R962V0403A17M4SCAP (incl. variants)
AS-104120-10	Heat Exchanger Assembly	1		R962V0603A17M4SCAP (incl. variants)
AS-104120-18	Heat Exchanger Assembly	1		R962V0855A21M4SCAP, R962V0855B21M4SCAP (incl. variants)
AS-104120-19	Heat Exchanger Assembly	1		R962V1005A21M4SCAP (incl. variants)
AS-104120-21	Heat Exchanger Assembly	1		R962V1155A24M4SCAP (incl. variants)
AS-104120-24	Heat Exchanger Assembly	1		R962V0705A21M4SCAP (incl. variants)
AS-104120-31	Heat Exchanger Assembly	1		R962V0703A17M4SCAP (incl. variants)
62-24141-07	Ignitor - Direct Spark Ignition (DSI)	1		All models
62-22175-51	Orifice	1/2		All models

Cabinet & hardware

Part No.	Description	Qty	Replaced By	Fits Models
63-106763-01	Black Oxide Square Drive Screw, 8-18 x 1/2 in.	1/2		All models
63-106763-02	Black Oxide Square Drive Screw, 8-18 x 1/4 in.	1		R962V0403A14M4SCAP, R962V0403A14UDSCAP, R962V0403A17M4SCAP, R962V0603A17M4SCAP, R962V0703A17M4SCAP, R962V0855A21M4SCAP, R962V0855B21M4SCAP, R962V1005A21M4SCAP, R962V1155A24M4SCAP (incl. variants)
AS-104135-01	Blower Shelf Assembly	1		R962V0603A17M4SCAP, R962V0703A17M4SCAP (incl. variants)
AS-104135-02	Blower Shelf Assembly	1		R962V0605A21M4SCAP, R962V0705A21M4SCAP, R962V0855A21M4SCAP, R962V0855B21M4SCAP, R962V1005A21M4SCAP (incl. variants)
AS-104135-03	Blower Shelf Assembly	1		R962V1155A24M4SCAP (incl. variants)
AS-104135-04	Blower Shelf Assembly	1		R962V0403A17M4SCAP (incl. variants)
AS-104043-02X	Blower/Lower Door/Label Kit	1		R962V0605A21M4SCAP, R962V0705A21M4SCAP, R962V0855A21M4SCAP, R962V0855B21M4SCAP, R962V1005A21M4SCAP (incl. variants)
AS-104043-03X	Blower/Lower Door/Label Kit	1		R962V1155A24M4SCAP (incl. variants)
63-19919-01	Bolt, 1/4-20 x 1-1/2 in.	1		All models
AE-103585-01	Bottom - Solid	1		R962V0403A17M4SCAP, R962V0603A17M4SCAP, R962V0703A17M4SCAP (incl. variants)
AE-103585-02	Bottom - Solid	1		R962V0605A21M4SCAP, R962V0705A21M4SCAP, R962V0855A21M4SCAP, R962V0855B21M4SCAP, R962V1005A21M4SCAP (incl. variants)
AE-103585-03	Bottom - Solid	1		R962V1155A24M4SCAP (incl. variants)
AE-103585-04	Bottom - Solid	1		R962V0403A14M4SCAP, R962V0403A14UDSCAP (incl. variants)
AS-104314-01	Bottom Plate Assembly	1		R962V0403A17M4SCAP, R962V0603A17M4SCAP, R962V0703A17M4SCAP (incl. variants)
AS-104314-02	Bottom Plate Assembly	1		R962V0605A21M4SCAP, R962V0705A21M4SCAP, R962V0855A21M4SCAP, R962V0855B21M4SCAP, R962V1005A21M4SCAP (incl. variants)
AS-104314-03	Bottom Plate Assembly	1		R962V1155A24M4SCAP (incl. variants)
AE-61913-02	Bracket - Overtemperature Switch	1		R962V1155A24M4SCAP (incl. variants)
AE-104332-01	Bracket Door Mounting	1		R962V0403A17M4SCAP, R962V0603A17M4SCAP, R962V0703A17M4SCAP (incl. variants)
AE-104332-02	Bracket Door Mounting	1		R962V0605A21M4SCAP, R962V0705A21M4SCAP, R962V0855A21M4SCAP, R962V0855B21M4SCAP, R962V1005A21M4SCAP (incl. variants)
AE-104332-03	Bracket Door Mounting	1		R962V1155A24M4SCAP (incl. variants)
AE-104332-04	Bracket Door Mounting	1		R962V0403A14M4SCAP, R962V0403A14UDSCAP (incl. variants)
AS-104042-02	Burner Compartment Door - Upper Door	1		R962V0605A21M4SCAP, R962V0705A21M4SCAP, R962V0855A21M4SCAP, R962V0855B21M4SCAP, R962V1005A21M4SCAP (incl. variants)
AE-104121-01	Burner Rack	1		R962V0403A14M4SCAP, R962V0403A14UDSCAP, R962V0403A17M4SCAP (incl. variants)
AE-104121-02	Burner Rack	1		R962V0603A17M4SCAP, R962V0605A21M4SCAP (incl. variants)

Part No.	Description	Qty	Replaced By	Fits Models
AE-104121-03	Burner Rack	1		R962V0703A17M4SCAP, R962V0705A21M4SCAP (incl. variants)
AE-104121-04	Burner Rack	1		R962V0855A21M4SCAP, R962V0855B21M4SCAP (incl. variants)
AE-104121-05	Burner Rack	1		R962V1005A21M4SCAP (incl. variants)
AE-104121-06	Burner Rack	1		R962V1155A24M4SCAP (incl. variants)
AE-104122-01	Burner Rack Cover	1		R962V0403A14M4SCAP, R962V0403A14UDSCAP, R962V0403A17M4SCAP (incl. variants)
AE-104122-02	Burner Rack Cover	1		R962V0603A17M4SCAP, R962V0605A21M4SCAP (incl. variants)
AE-104122-03	Burner Rack Cover	1		R962V0703A17M4SCAP, R962V0705A21M4SCAP (incl. variants)
AE-104122-04	Burner Rack Cover	1		R962V0855A21M4SCAP, R962V0855B21M4SCAP (incl. variants)
AE-104122-05	Burner Rack Cover	1		R962V1005A21M4SCAP (incl. variants)
AE-104122-06	Burner Rack Cover	1		R962V1155A24M4SCAP (incl. variants)
AS-104042-03X	Burner/Upper Door/Label Kit	1		R962V1155A24M4SCAP (incl. variants)
45-17055-13	Bushing - Strain Relief	1		All models
64-101148-09	Cable Tie - Double Loop, 11.8"	1		All models
64-103686-03	Clamp - Wire Hose	1		All models
68-104111-11	Collector Box	1		R962V0705A21M4SCAP (incl. variants)
68-110928-02	Collector Box - 14 in. Wide - 0.90 in. Choke	1		R962V0403A14UDSCAP (incl. variants)
68-110928-01	Collector Box - 14 in. Wide - 0.92 in. Choke	1		R962V0403A14M4SCAP (incl. variants)
68-103546-01	Collector Box Gasket	1		R962V1155A24M4SCAP (incl. variants)
68-103546-02	Collector Box Gasket	1		R962V0605A21M4SCAP, R962V0705A21M4SCAP, R962V0855A21M4SCAP, R962V0855B21M4SCAP, R962V1005A21M4SCAP (incl. variants)
68-103546-03	Collector Box Gasket	1		R962V0403A17M4SCAP, R962V0603A17M4SCAP, R962V0703A17M4SCAP (incl. variants)
68-104111-81	Collector Box Kit	1		R962V0403A17M4SCAP (incl. variants)
68-104111-82	Collector Box Kit	1		R962V0855A21M4SCAP, R962V0855B21M4SCAP (incl. variants)
68-104111-83	Collector Box Kit	1		R962V1155A24M4SCAP (incl. variants)
68-104111-95	Collector Box Kit	1		R962V0603A17M4SCAP (incl. variants)
68-104111-96	Collector Box Kit	1		R962V0703A17M4SCAP (incl. variants)
68-104111-98	Collector Box Kit	1		R962V1005A21M4SCAP (incl. variants)
AE-103589-01	Control Board Mounting Plate	1		All models
68-104374-34	Door Filler (Gray) - 14.0 in.	1		R962V0403A14M4SCAP, R962V0403A14UDSCAP (incl. variants)
68-104374-31	Door Filler (Gray) - 17.5 in.	1		R962V0403A17M4SCAP, R962V0603A17M4SCAP, R962V0703A17M4SCAP (incl. variants)
68-104374-32	Door Filler (Gray) - 21.0 in.	1		R962V0605A21M4SCAP, R962V0705A21M4SCAP, R962V0855A21M4SCAP, R962V0855B21M4SCAP, R962V1005A21M4SCAP (incl. variants)
68-104374-33	Door Filler (Gray) - 24.5 in.	1		R962V1155A24M4SCAP (incl. variants)
79-104393-01	Drain Tube	1		R962V0403A14M4SCAP, R962V0403A14UDSCAP, R962V0605A21M4SCAP, R962V0855B21M4SCAP (incl. variants)
79-104394-01	Drain Tube	1		R962V0403A14M4SCAP, R962V0403A14UDSCAP, R962V0605A21M4SCAP, R962V0855B21M4SCAP (incl. variants)
79-107210-01	EPDM Rubber Tubing (Bulk - Non-Salable)	1		All models
68-104146-04	Exhaust Coupling	1		R962V0605A21M4SCAP, R962V0855B21M4SCAP (incl. variants)
68-104146-05	Exhaust Coupling	1		R962V0403A14M4SCAP, R962V0403A14UDSCAP (incl. variants)
68-103547-04	Gasket (Center Panel/Front Plate)	1		R962V0403A14M4SCAP, R962V0403A14UDSCAP (incl. variants)
68-103546-04	Gasket (Collector Box/Front Plate)	1		R962V0403A14M4SCAP, R962V0403A14UDSCAP (incl. variants)
68-104413-01	Gasket - 25 ft.	3		All models

Part No.	Description	Qty	Replaced By	Fits Models
68-104382-04	Gasket - Blower Shelf	1		R962V0403A14M4SCAP, R962V0403A14UDSCAP (incl. variants)
68-104382-01	Gasket - Blower Shelf (17.5 in.)	1		R962V0403A17M4SCAP, R962V0603A17M4SCAP, R962V0703A17M4SCAP (incl. variants)
68-104382-02	Gasket - Blower Shelf (21 in.)	1		R962V0605A21M4SCAP, R962V0705A21M4SCAP, R962V0855A21M4SCAP, R962V0855B21M4SCAP, R962V1005A21M4SCAP (incl. variants)
68-104382-03	Gasket - Blower Shelf (24.5 in.)	1		R962V1155A24M4SCAP (incl. variants)
AE-61951-53	Gasket - Door	1		R962V0403A14M4SCAP, R962V0403A14UDSCAP (incl. variants)
AE-61951-54	Gasket - Door (17.5 in.)	1		R962V0403A17M4SCAP, R962V0603A17M4SCAP, R962V0703A17M4SCAP (incl. variants)
AE-61951-55	Gasket - Door (21 in.)	1		R962V1005A21M4SCAP (incl. variants)
AE-61951-56	Gasket - Door (24.5 in.)	1		R962V1155A24M4SCAP (incl. variants)
68-104125-04	Gasket - Graphite 14.0 Coil/Transition	1		R962V0403A14M4SCAP, R962V0403A14UDSCAP (incl. variants)
68-104126-04	Gasket - Graphite 14.0 Trans Back/Front	1		R962V0403A14M4SCAP, R962V0403A14UDSCAP (incl. variants)
68-104152-01	Gasket - Induced Draft Blower	1		All models
68-22079-03	Gasket - Neoprene (1/16 in. x 3/4 in.)	1	OBSOLETE	R962V0403A17M4SCAP, R962V0603A17M4SCAP, R962V0605A21M4SCAP, R962V0703A17M4SCAP, R962V0705A21M4SCAP, R962V0855A21M4SCAP, R962V0855B21M4SCAP, R962V1005A21M4SCAP, R962V1155A24M4SCAP (incl. variants)
68-22079-85	Gasket - Neoprene (1/8 in. x 3/4 in.) - 100 ft. Roll	2		All models
56-22114-06	Grommet - Gas Pipe	1		R962V0403A14M4SCAP, R962V0403A14UDSCAP, R962V0403A17M4SCAP, R962V0603A17M4SCAP, R962V0605A21M4SCAP, R962V0705A21M4SCAP, R962V0855A21M4SCAP, R962V0855B21M4SCAP, R962V1005A21M4SCAP, R962V1155A24M4SCAP (incl. variants)
63-17189-03	Hex Nut, 1/4-20, w/External Tooth Lock Washer	1		All models
10-61885-03	Ignitor Bracket	1		R962V0403A14M4SCAP, R962V0403A14UDSCAP (incl. variants)
AE-61885-02	Ignitor Bracket	1		R962V0403A17M4SCAP, R962V0603A17M4SCAP, R962V0605A21M4SCAP, R962V0703A17M4SCAP, R962V0705A21M4SCAP, R962V0855A21M4SCAP, R962V0855B21M4SCAP, R962V1005A21M4SCAP, R962V1155A24M4SCAP (incl. variants)
68-103536-01	Insulation - Foil Back	1		R962V0403A17M4SCAP, R962V0603A17M4SCAP, R962V0703A17M4SCAP (incl. variants)
68-103536-02	Insulation - Foil Back	1		R962V0605A21M4SCAP, R962V0705A21M4SCAP, R962V0855A21M4SCAP, R962V0855B21M4SCAP, R962V1005A21M4SCAP (incl. variants)
68-103536-03	Insulation - Foil Back	1		R962V1155A24M4SCAP (incl. variants)
68-103536-04	Insulation - Foil Black	1		R962V0403A14M4SCAP, R962V0403A14UDSCAP (incl. variants)
68-103537-01	Insulation - Sound	1		R962V0403A17M4SCAP, R962V0603A17M4SCAP, R962V0703A17M4SCAP (incl. variants)
68-103537-02	Insulation - Sound	1		R962V0605A21M4SCAP, R962V0705A21M4SCAP, R962V0855A21M4SCAP, R962V0855B21M4SCAP, R962V1005A21M4SCAP (incl. variants)
68-103537-03	Insulation - Sound	1		R962V1155A24M4SCAP (incl. variants)
68-103537-04	Insulation - Sound	1		R962V0403A14M4SCAP, R962V0403A14UDSCAP (incl. variants)
68-103535-09	Insulation - Top Plate 14.0	1		R962V0403A14M4SCAP, R962V0403A14UDSCAP (incl. variants)
AE-67925-01	Insulation Retainer	1		All models
AE-61475-03	Junction Box	1		All models
AE-61476-03	Juncton Box Cover	1		All models
64-104352-01	Latch Cam	1		All models
64-104351-03	Latch Handle/Stud (Gray)	1		All models

Part No.	Description	Qty	Replaced By	Fits Models
AE-104192-01	Left Jacket Baffle	1		R962V0703A17M4SCAP, R962V1005A21M4SCAP (incl. variants)
AE-104192-02	Left Jacket Baffle	1		R962V0403A17M4SCAP (incl. variants)
AE-104192-03	Left Jacket Baffle	1		R962V0603A17M4SCAP, R962V0705A21M4SCAP (incl. variants)
AE-104192-04	Left Jacket Baffle	1		R962V0855A21M4SCAP, R962V0855B21M4SCAP (incl. variants)
AE-104192-06	Left Jacket Baffle	1		R962V1155A24M4SCAP (incl. variants)
63-101978-01	Machine Screw, 1/4-20 x 1 in.	1/2		All models
81-104526-01	Manifold	1		R962V0403A17M4SCAP (incl. variants)
81-104526-02	Manifold	1		R962V0603A17M4SCAP, R962V0605A21M4SCAP (incl. variants)
81-104526-03	Manifold	1		R962V0703A17M4SCAP, R962V0705A21M4SCAP (incl. variants)
81-104526-04	Manifold	1		R962V0855A21M4SCAP, R962V0855B21M4SCAP (incl. variants)
81-104526-05	Manifold	1		R962V1005A21M4SCAP (incl. variants)
81-104526-06	Manifold	1		R962V1155A24M4SCAP (incl. variants)
81-104526-08	Manifold (90+) - 3 Cells	1		R962V0403A14M4SCAP, R962V0403A14UDSCAP (incl. variants)
91-104371-21	Nameplate - 17.5 in. Bagged CLSC/ACHVR	1		R962V0403A14M4SCAP, R962V0403A14UDSCAP, R962V0403A17M4SCAP, R962V0603A17M4SCAP, R962V0703A17M4SCAP (incl. variants)
91-104371-22	Nameplate - 21 in. Bagged CLSC/ACHVR	1		R962V0605A21M4SCAP, R962V0705A21M4SCAP, R962V0855A21M4SCAP, R962V0855B21M4SCAP, R962V1005A21M4SCAP (incl. variants)
68-104386-02	O-Ring	1		All models
AS-104042-01X	Panel/Label Kit	1		R962V0403A17M4SCAP, R962V0603A17M4SCAP, R962V0703A17M4SCAP (incl. variants)
AS-104043-01X	Panel/Label Kit	1		R962V0403A17M4SCAP, R962V0603A17M4SCAP, R962V0703A17M4SCAP (incl. variants)
68-104446-01	Parts Bag	1		All models
AE-104190-01	Rear Jacket Baffle	1		R962V0403A17M4SCAP, R962V0603A17M4SCAP, R962V0703A17M4SCAP (incl. variants)
AE-104190-02	Rear Jacket Baffle	1		R962V0605A21M4SCAP, R962V0705A21M4SCAP, R962V0855A21M4SCAP, R962V0855B21M4SCAP, R962V1005A21M4SCAP (incl. variants)
AE-104190-03	Rear Jacket Baffle	1		R962V1155A24M4SCAP (incl. variants)
45-104315-01	Rectangular Flush Mount Plug	1		All models
AE-104191-01	Right Jacket Baffle	1		R962V0703A17M4SCAP, R962V1005A21M4SCAP (incl. variants)
AE-104191-02	Right Jacket Baffle	1		R962V0403A17M4SCAP (incl. variants)
AE-104191-03	Right Jacket Baffle	1		R962V0603A17M4SCAP (incl. variants)
AE-104191-04	Right Jacket Baffle	1		R962V0705A21M4SCAP, R962V0855A21M4SCAP, R962V0855B21M4SCAP (incl. variants)
AE-104191-06	Right Jacket Baffle	1		R962V1155A24M4SCAP (incl. variants)
45-103596-01	Round Flush Mount Plug	1		All models
45-103596-03	Round Flush Mount Plug	1		All models
45-103596-04	Round Flush Mount Plug	1		All models
45-103596-06	Round Flush Mount Plug	1		All models
56-104377-01	Rubber Plug	1		R962V0403A14M4SCAP, R962V0403A14UDSCAP, R962V0605A21M4SCAP, R962V0855B21M4SCAP (incl. variants)
63-104375-08	Screw - Hex Head - 8-32 x 1 in. Machine Thread	1		R962V0403A14M4SCAP, R962V0403A14UDSCAP (incl. variants)
63-103934-02	Screw - Plastic Threading Hex Head (8-18 x .375)	1		All models
63-104375-02	Screw - Sheet Metal - 8-32 x 0.4 in.	1		All models
63-104523-01	Screw - Sheet Metal - 8-32 x 1/2 in.	3/4/5/8		All models

Part No.	Description	Qty	Replaced By	Fits Models
63-104375-01	Screw - Sheet Metal - 8-32 x 3.3 in.	1		R962V0403A17M4SCAP, R962V0603A17M4SCAP, R962V0605A21M4SCAP, R962V0703A17M4SCAP, R962V0705A21M4SCAP, R962V0855A21M4SCAP, R962V0855B21M4SCAP, R962V1005A21M4SCAP, R962V1155A24M4SCAP (incl. variants)
63-22153-11	Screws - Sheet Metal. 8-18 x 3/4 in.	2/3		All models
67-24036-01	Sealant	1		All models
63-106762-01	Sheet Metal Screw - Jacket Trim Head Thread Point	1		All models
63-22338-02	Sheet Metal Screw, 6-20 x 1/4 in.	1		All models
63-22153-05	Sheet Metal Screw, 8-18 x 3/8 in.	1/2		All models
63-24368-03	Sheet Metal Screw, 8-18 x 1/2 in.	1/2		All models
63-24368-01	Sheet Metal Screw, 8-18 x 1/4 in.	1/2/3		All models
68-21893-04	Sight Glass	1		All models
45-18515-01	Snap-In Bushing - Conductor Protection	1		R962V0403A14M4SCAP, R962V0403A14UDSCAP, R962V0403A17M4SCAP, R962V0603A17M4SCAP, R962V0605A21M4SCAP, R962V0705A21M4SCAP, R962V0855A21M4SCAP, R962V0855B21M4SCAP, R962V1005A21M4SCAP, R962V1155A24M4SCAP (incl. variants)
63-22429-01	Stainless Steel Sheet Metal Screw, 8-18 x 1/2 in.	1/2/4		All models
AE-61951-51	Stripping - Cut Length	1		All models
AE-104127-01	Support - Heat Exchanger	1		R962V0403A17M4SCAP, R962V0603A17M4SCAP, R962V0703A17M4SCAP (incl. variants)
AE-104127-02	Support - Heat Exchanger	1		R962V0605A21M4SCAP, R962V0705A21M4SCAP, R962V0855A21M4SCAP, R962V0855B21M4SCAP, R962V1005A21M4SCAP (incl. variants)
AE-104127-03	Support - Heat Exchanger	1		R962V1155A24M4SCAP (incl. variants)
42-22692-13	Switch - Push Button	1		R962V0403A17M4SCAP, R962V0603A17M4SCAP, R962V0703A17M4SCAP, R962V0705A21M4SCAP, R962V0855A21M4SCAP, R962V0855B21M4SCAP, R962V1005A21M4SCAP, R962V1155A24M4SCAP (incl. variants)
79-22461-02	Tee - 3/16 in. x 3/16 in. x 3/16 in.	1		All models
AS-104134-01	Top Plate Assembly	1		R962V0403A17M4SCAP, R962V0603A17M4SCAP, R962V0703A17M4SCAP (incl. variants)
AS-104134-02	Top Plate Assembly	1		R962V0605A21M4SCAP, R962V0705A21M4SCAP, R962V0855A21M4SCAP, R962V0855B21M4SCAP, R962V1005A21M4SCAP (incl. variants)
AS-104134-03	Top Plate Assembly	1		R962V1155A24M4SCAP (incl. variants)
68-104145-04	Transition - Elbow - Outlet Air Upflow	1		R962V0403A14M4SCAP, R962V0403A14UDSCAP (incl. variants)
68-24022-03	Transition - Gasket	1		All models
68-104133-02	Transition - Outlet Air	1		R962V0403A17M4SCAP, R962V0603A17M4SCAP, R962V0605A21M4SCAP, R962V0703A17M4SCAP, R962V0705A21M4SCAP, R962V0855A21M4SCAP, R962V0855B21M4SCAP, R962V1005A21M4SCAP, R962V1155A24M4SCAP (incl. variants)
68-104145-03	Transition - Outlet Air Elbow	1		R962V0403A17M4SCAP, R962V0603A17M4SCAP, R962V0605A21M4SCAP, R962V0703A17M4SCAP, R962V0705A21M4SCAP, R962V0855A21M4SCAP, R962V0855B21M4SCAP, R962V1005A21M4SCAP, R962V1155A24M4SCAP (incl. variants)
68-104133-06	Transition - Outlet Air Upflow	1		R962V0403A14M4SCAP, R962V0403A14UDSCAP (incl. variants)
56-103685-01	Vinyl Cap	1		R962V0403A14M4SCAP, R962V0403A14UDSCAP, R962V0403A17M4SCAP, R962V0603A17M4SCAP, R962V0605A21M4SCAP, R962V0705A21M4SCAP, R962V0855A21M4SCAP, R962V0855B21M4SCAP, R962V1005A21M4SCAP, R962V1155A24M4SCAP (incl. variants)
63-26198-02	Washer - Flat (Fender)	1/2		All models
68-104346-01K	Water Trap Kit - Condensate Drain	1		All models
AE-104385-01	Water Trap Mounting Bracket	1		All models

Part No.	Description	Qty	Replaced By	Fits Models
64-17606-01	Wire & Cable Tie - Nylon Black - 8 in.	1		All models