Rheem R97MV Gas Furnace Replacement Parts List

Parts list RP-RHM-R97MV | Updated Nov 2026 | 186 parts | 10 model numbers

Genuine Rheem OEM part numbers for the models listed below, compiled from Rheem Manufacturing's service parts catalog. Quantities are per unit. Where Rheem has replaced a part number, the current number is shown under Replaced By. Always confirm the full model and serial number of the unit before ordering.

Models covered

R97MV0603A17DHSGAP, R97MV0603A17DHSGAPRHC, R97MV0703A17DHSGAP, R97MV0703A17DHSGAPRHC, R97MV0855A21DHSGAP, R97MV0855A21DHSGAPRHC, R97MV1005A21DHSGAP, R97MV1005A21DHSGAPRHC, R97MV1155A24DHSGAP, R97MV1155A24DHSGAPRHC

R97MV parts breakdown: Exploded View

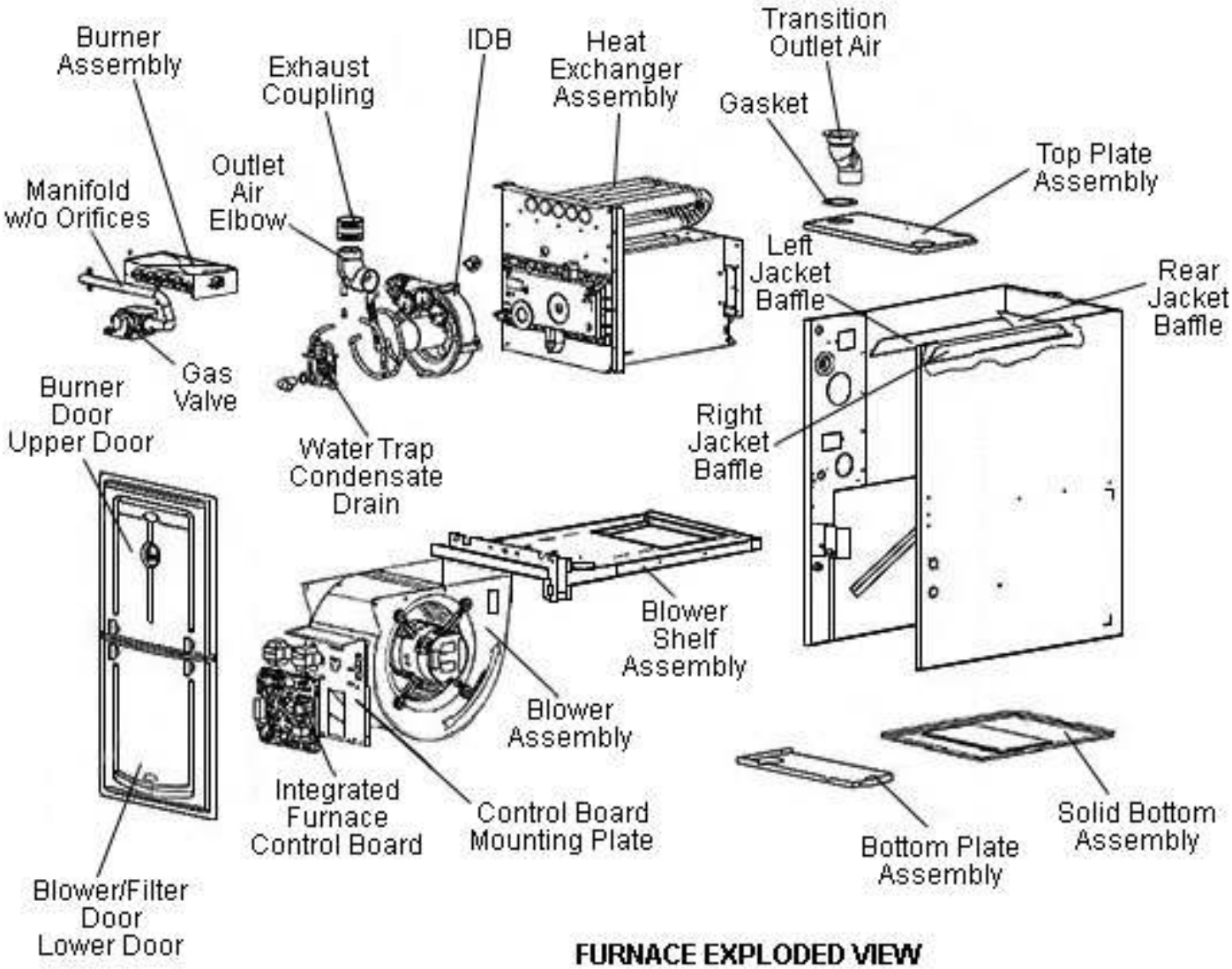

FURNACE EXPLODED VIEW

R97MV parts breakdown: Junction Box

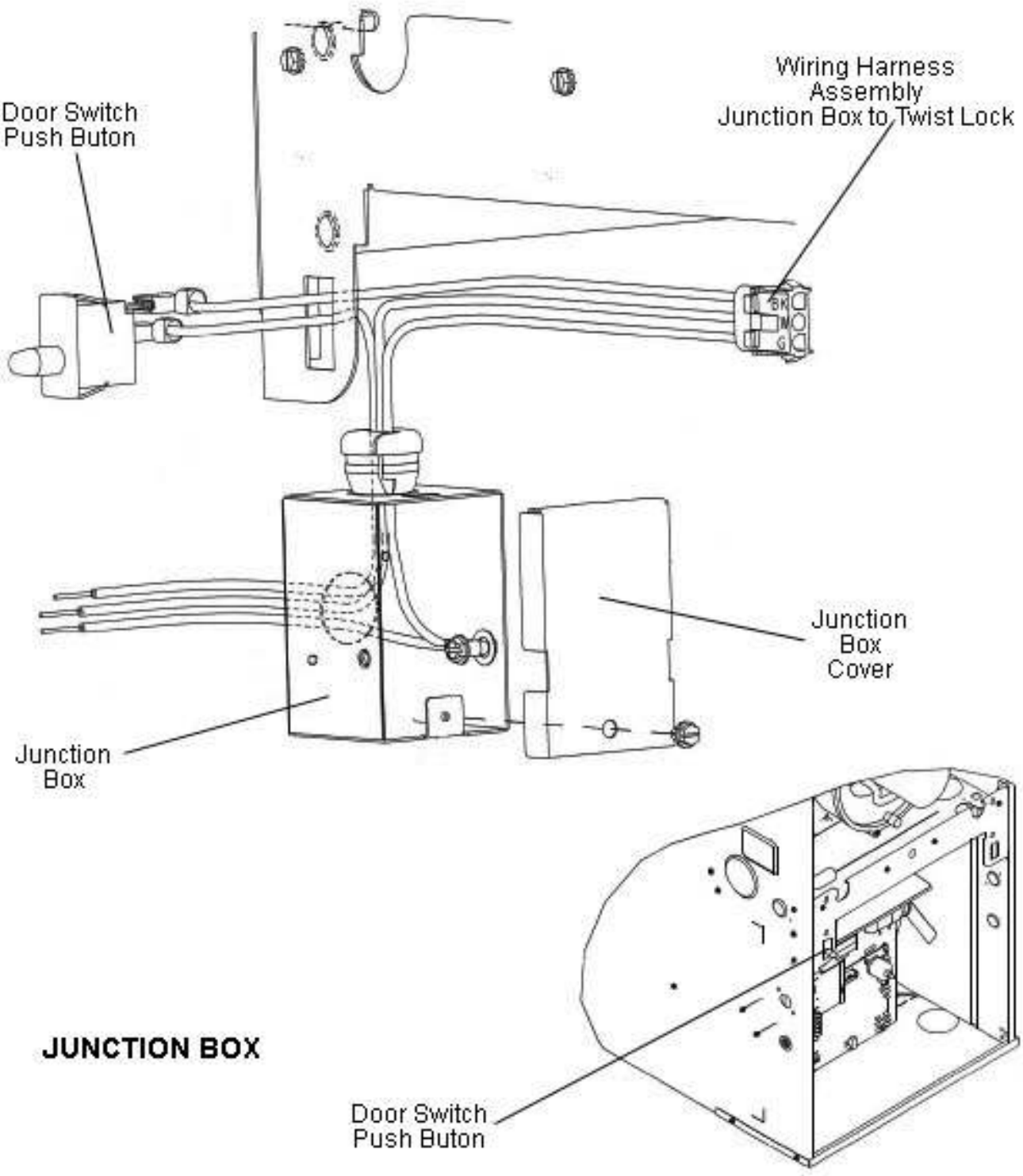

R97MV parts breakdown: Induced Draft Blower

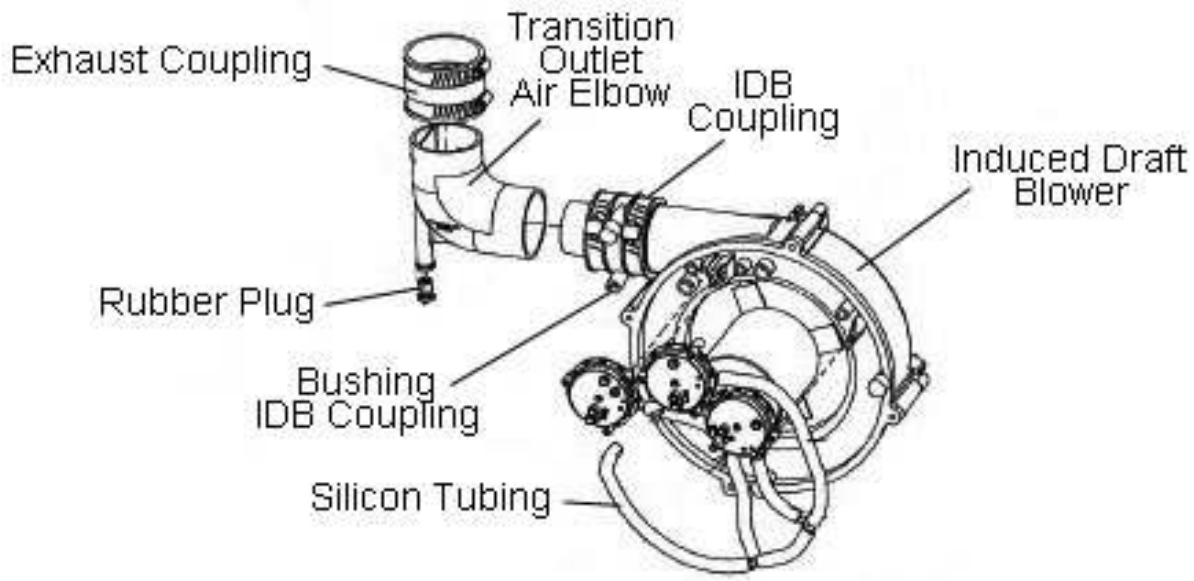

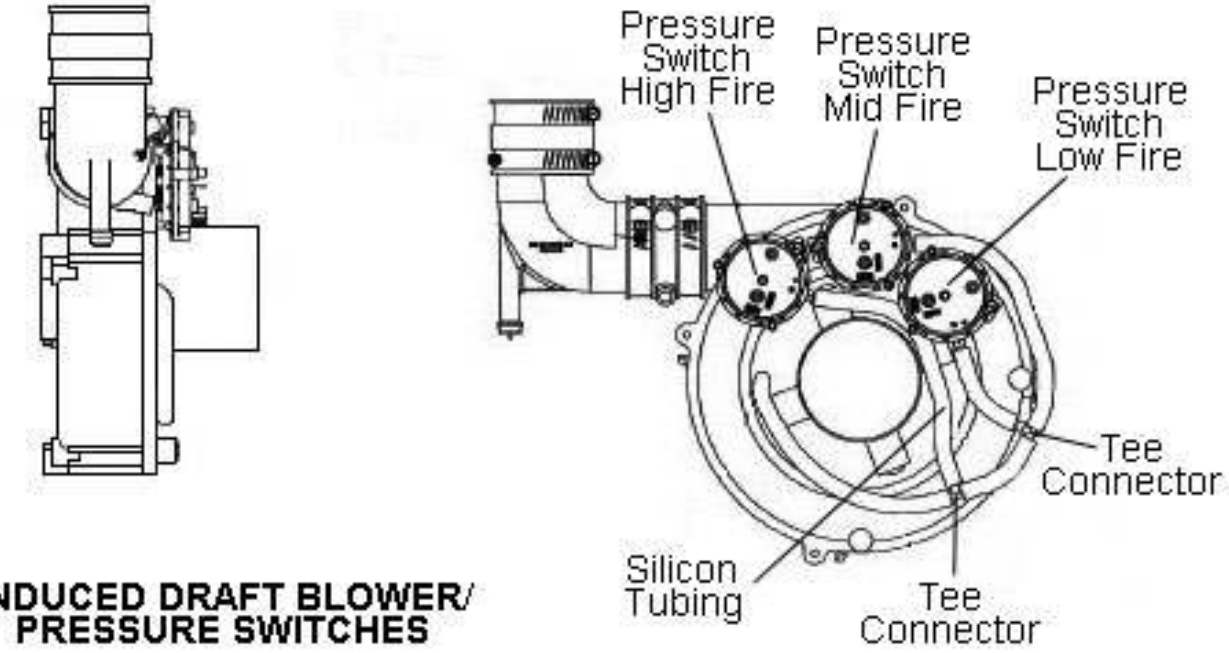

INDUCED DRAFT BLOWER/ PRESSURE SWITCHES

R97MV parts breakdown: Blower Assembly

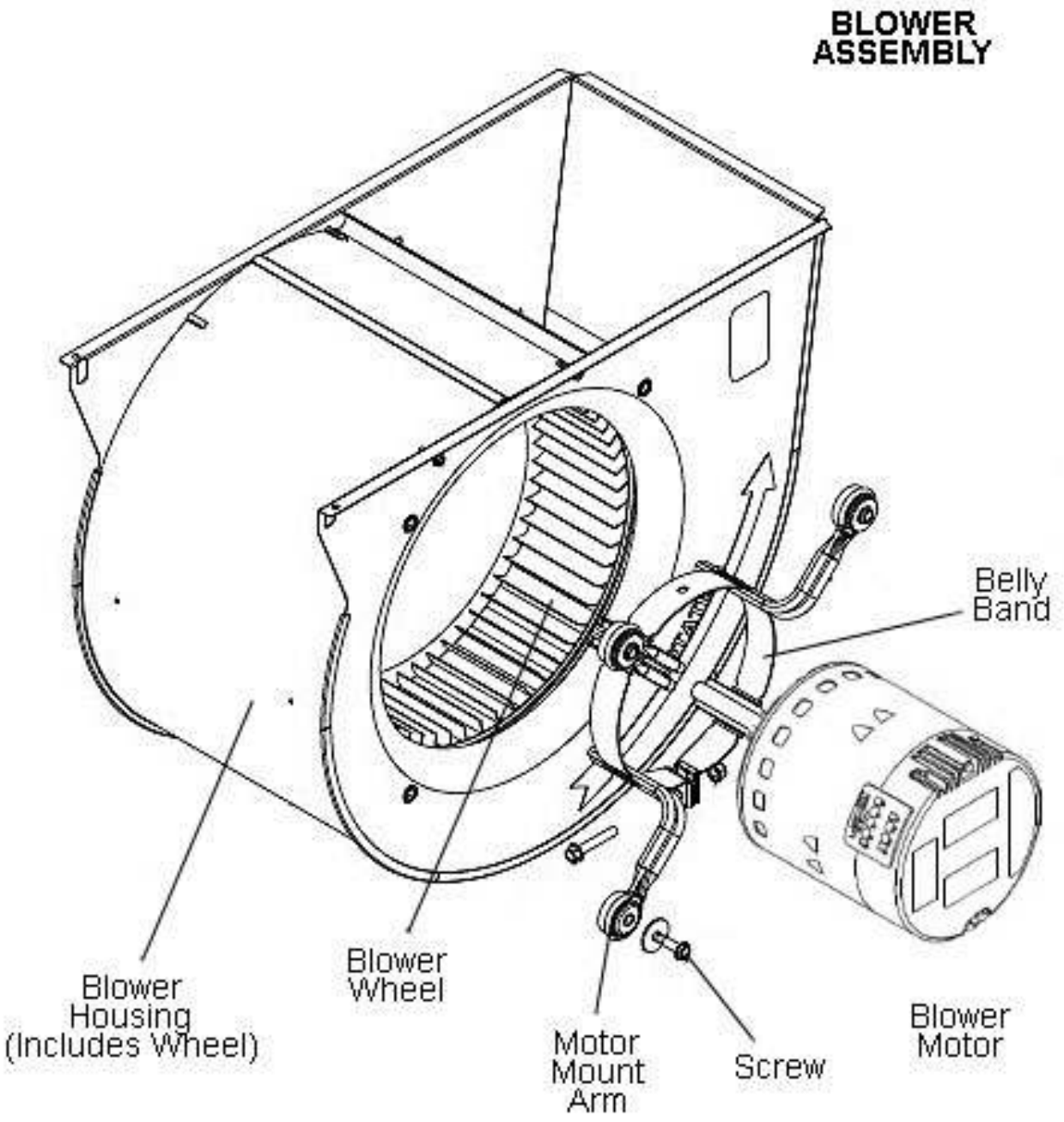

R97MV parts breakdown: Control Board Mounting

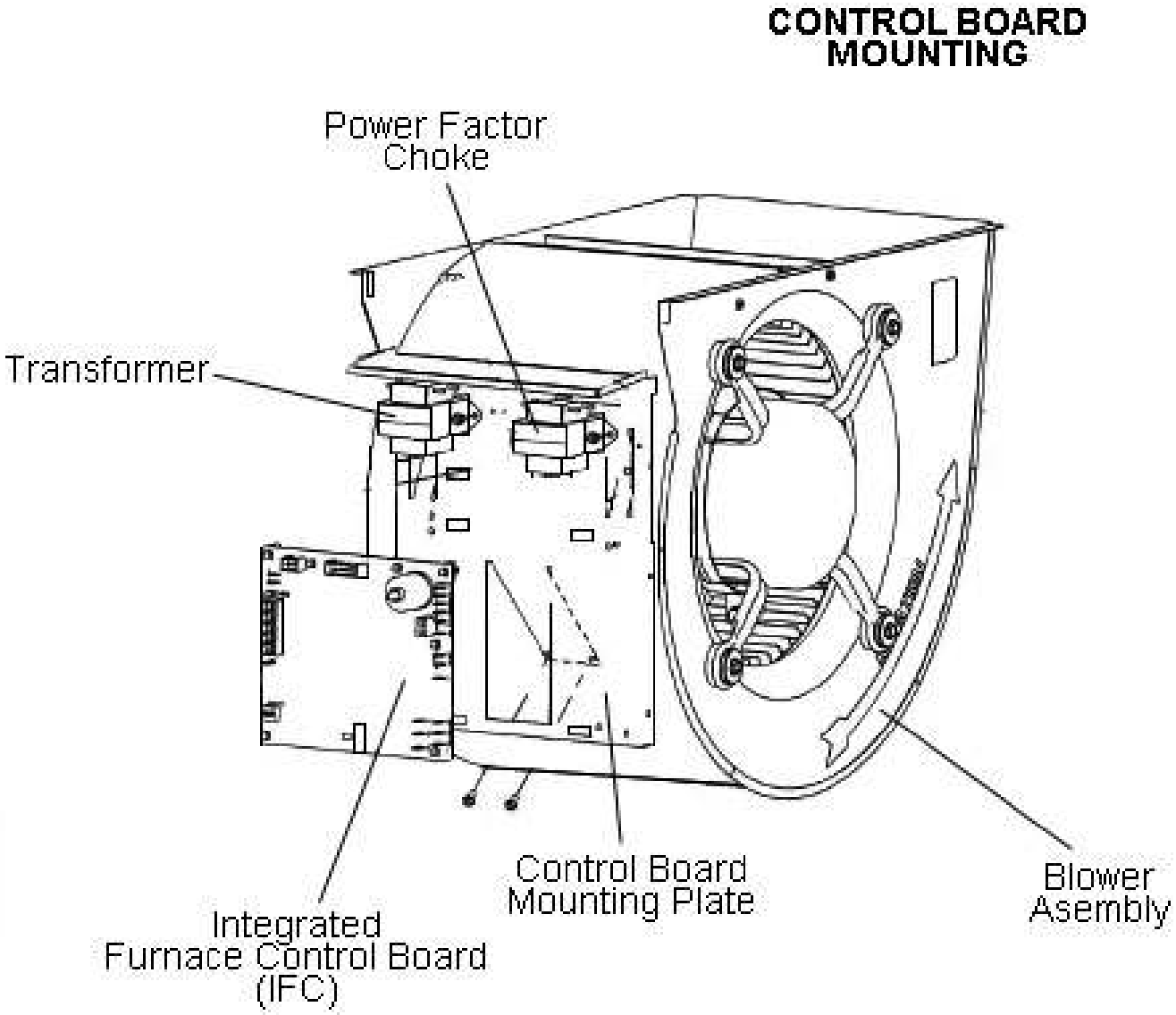

R97MV parts breakdown: Burner-Assembly

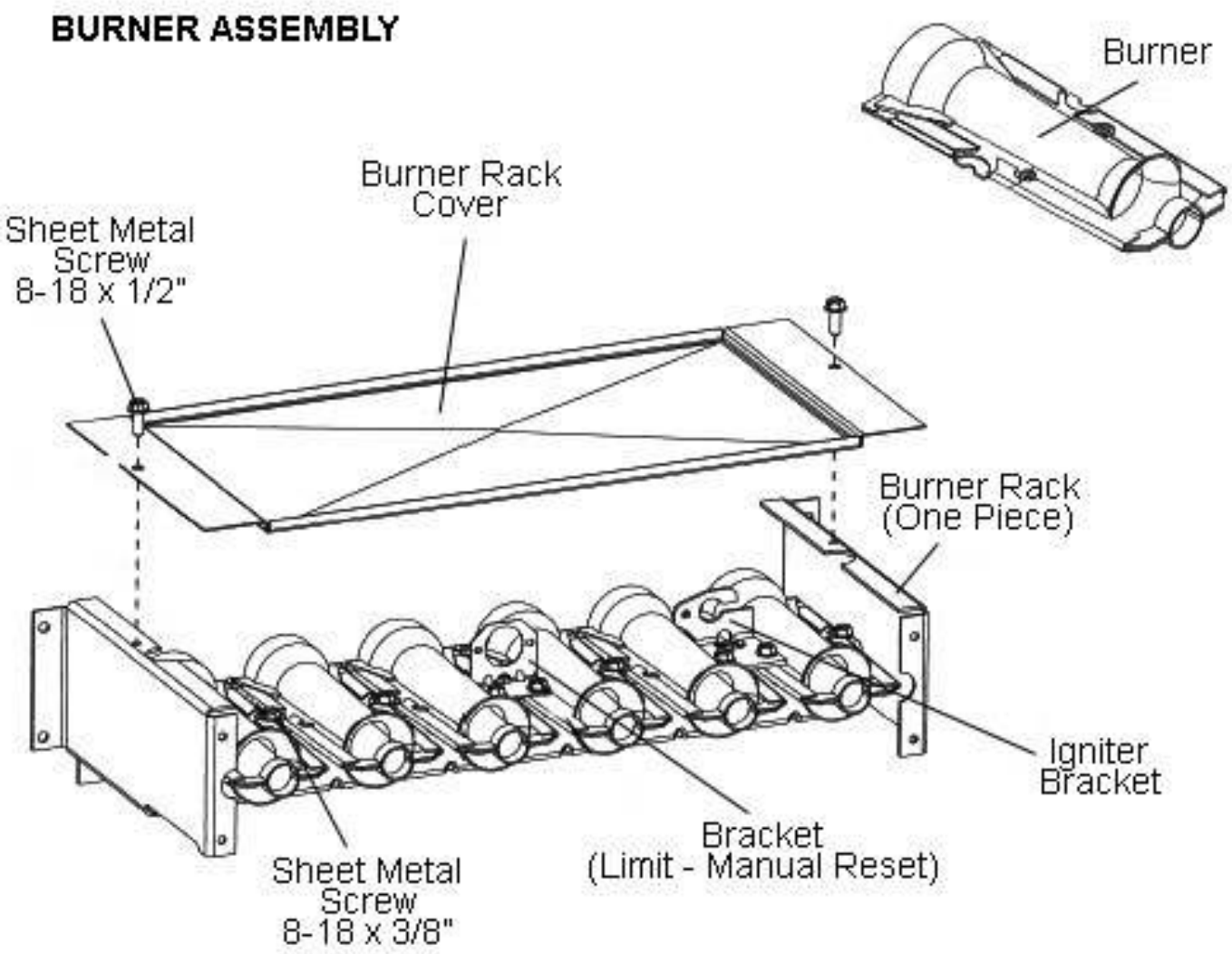

R97MV parts breakdown: Flame Sensor-Limits

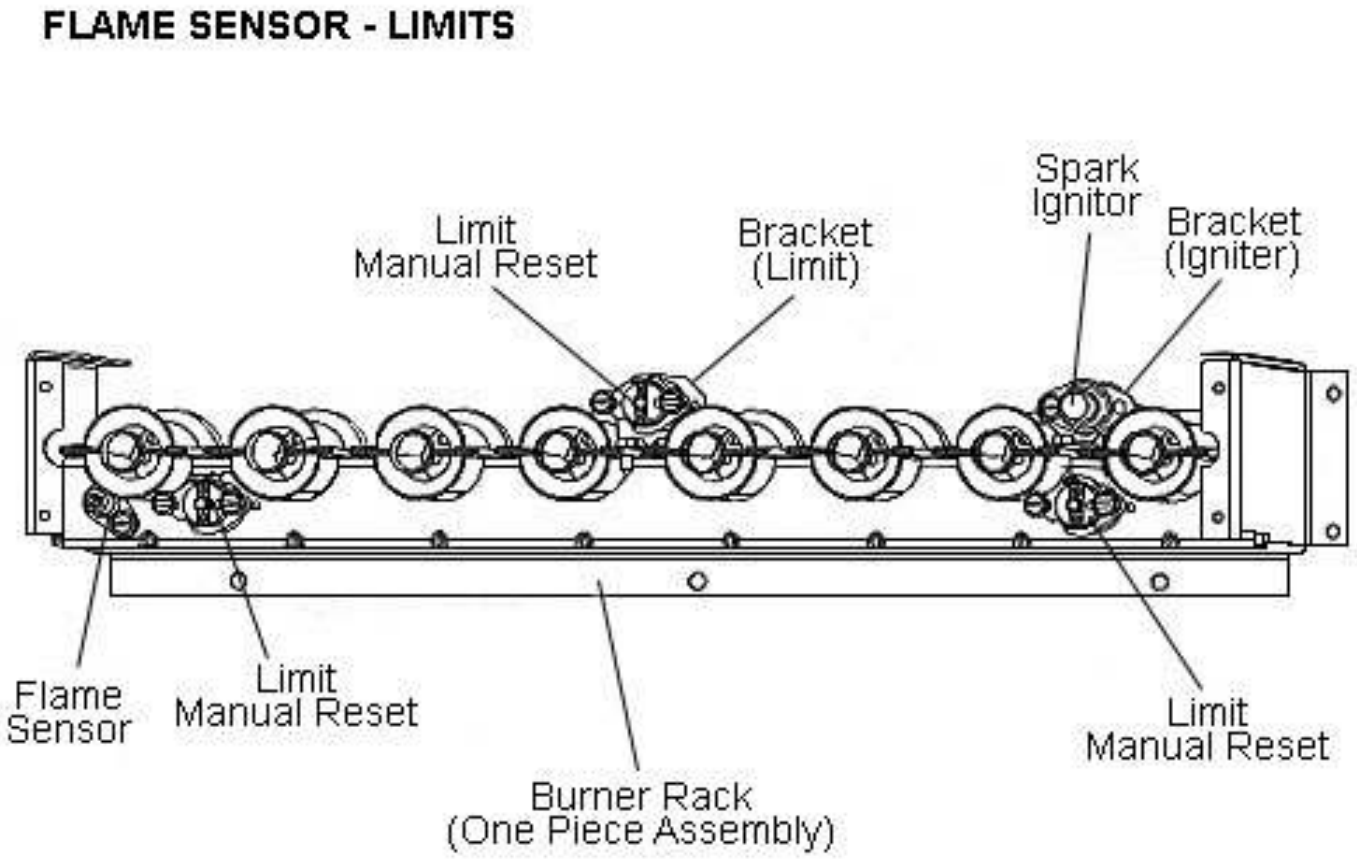

R97MV parts breakdown: Burner-Gas Valve

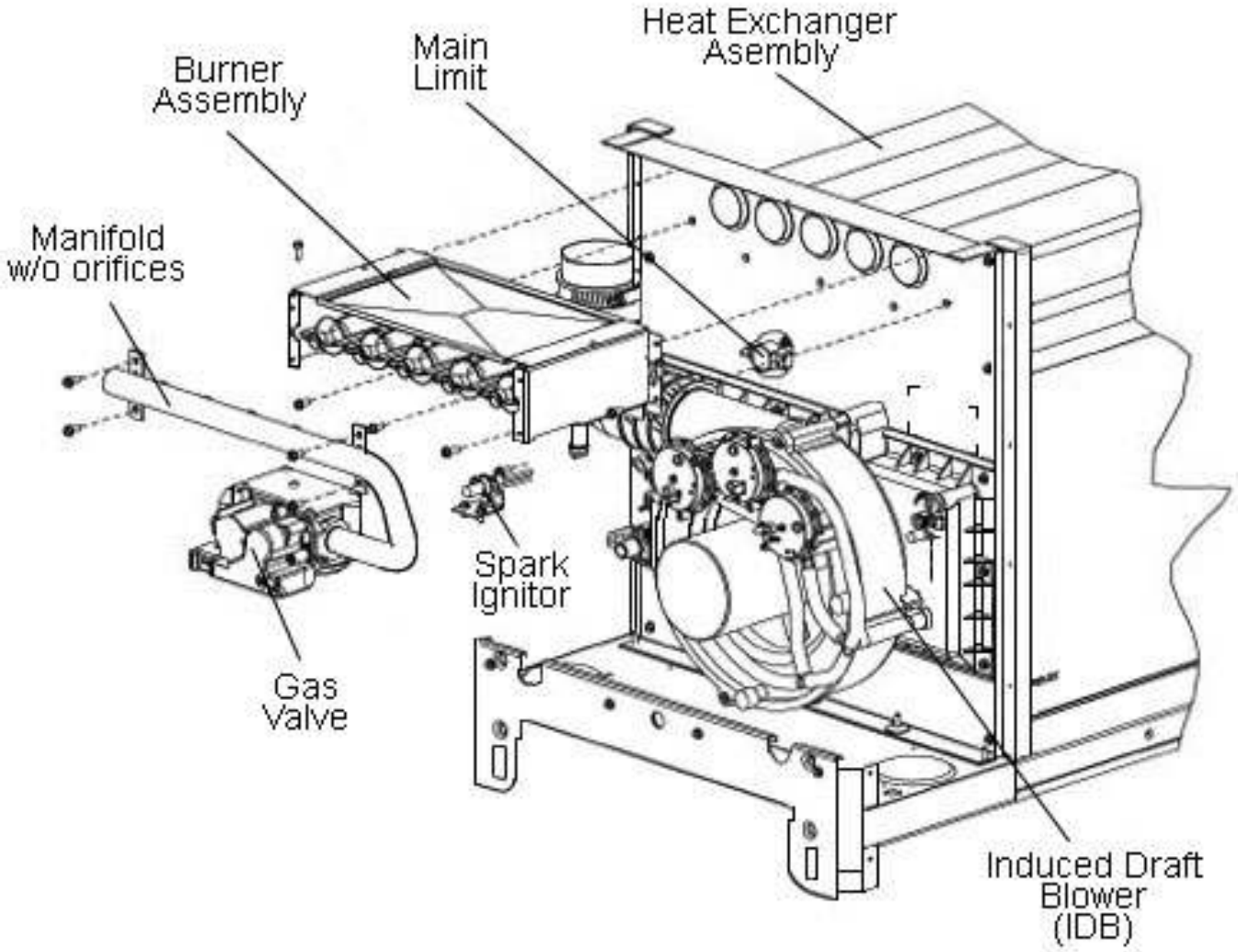

R97MV parts breakdown: Heat Exchanger - Collector Box

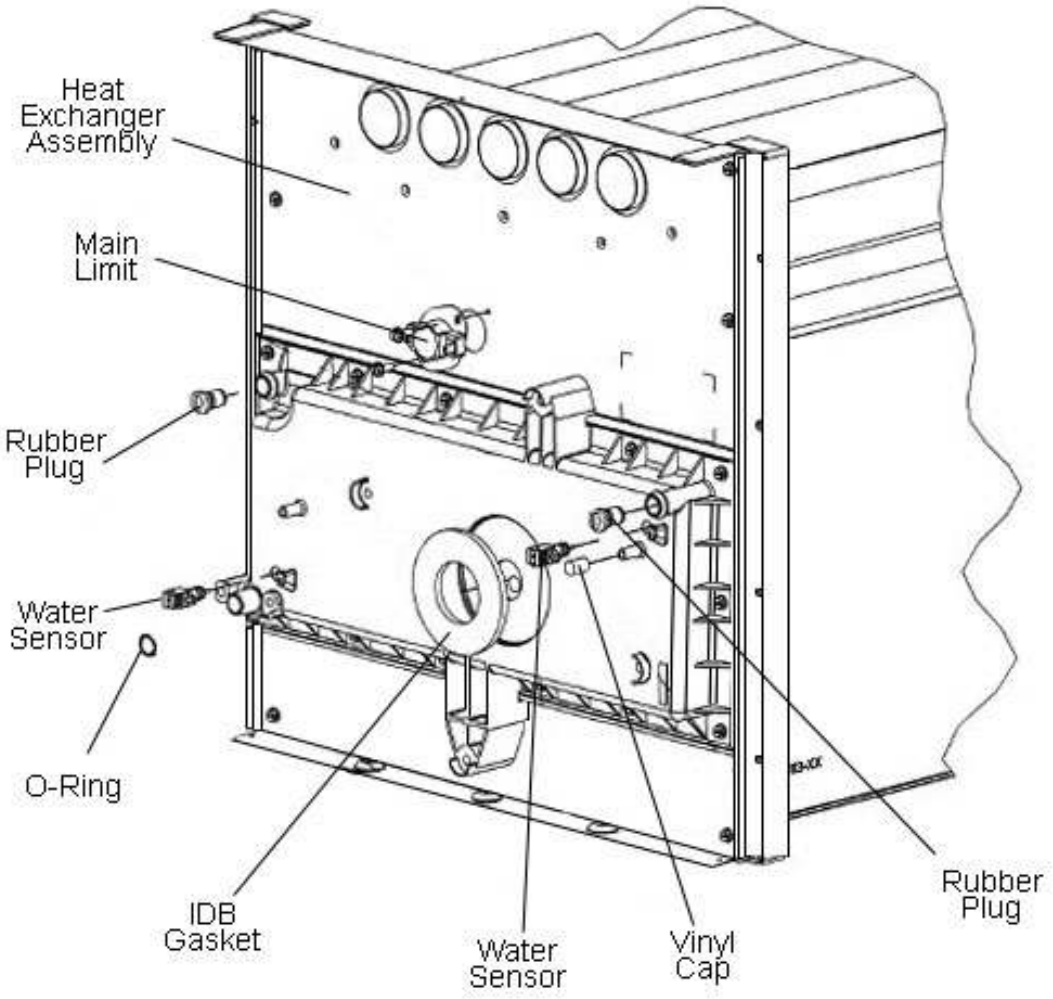

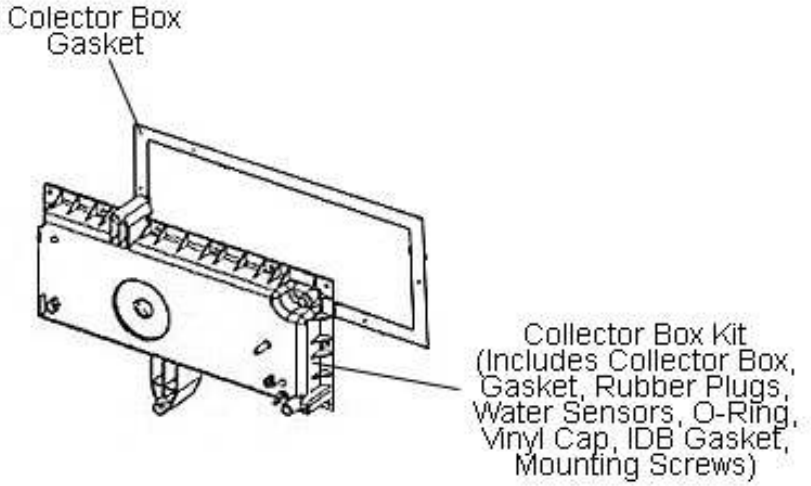

R97MV parts breakdown: Trap - Hose Assembly

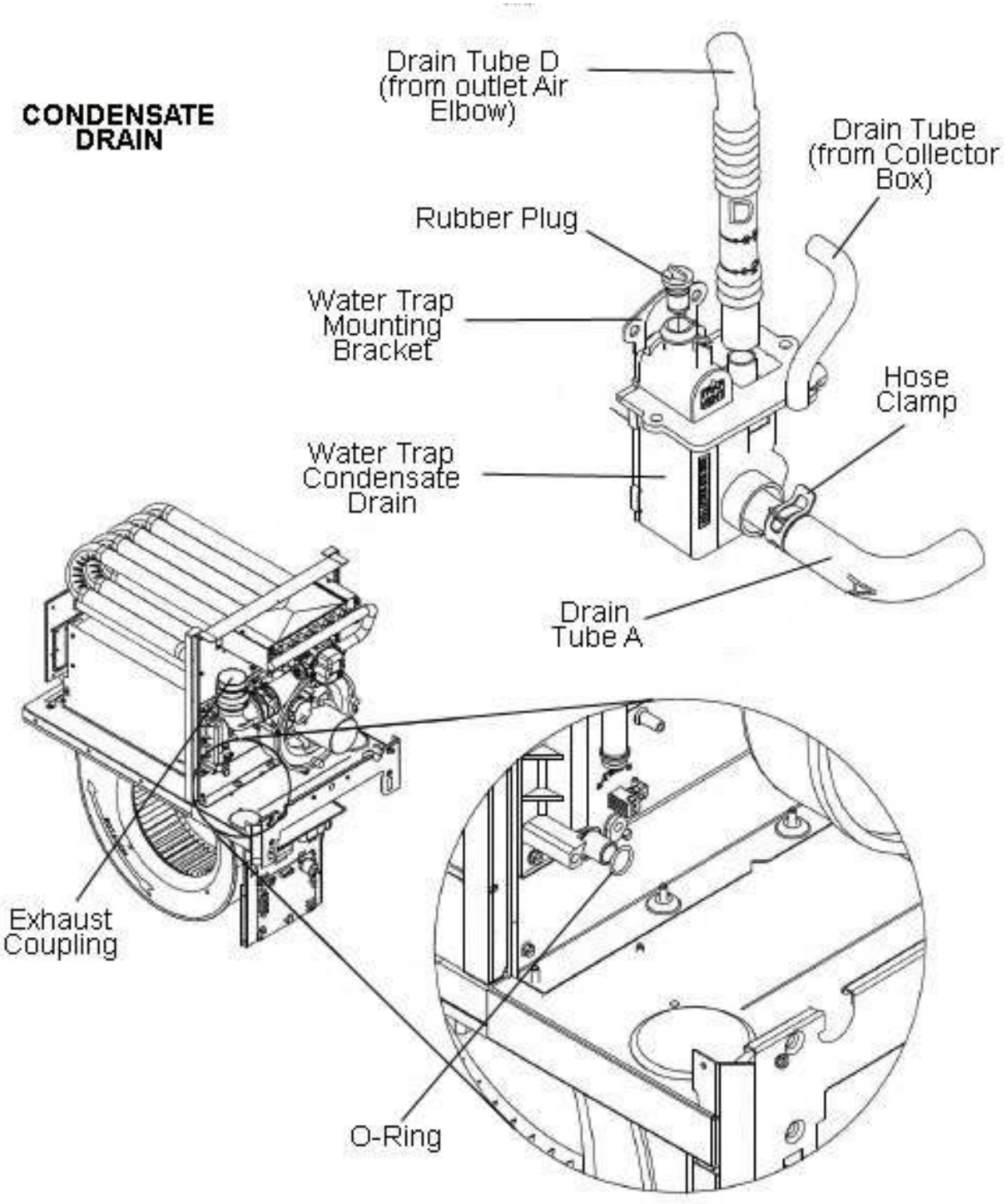

Motors & fans

Part No.	Description	Qty	Replaced By	Fits Models
AS-104532-01	Blower Assembly	1		R97MV0603A17DHSGAP, R97MV0703A17DHSGAP (incl. variants)
AS-104532-02	Blower Assembly	1		R97MV0855A21DHSGAP, R97MV1005A21DHSGAP (incl. variants)
AS-104532-05	Blower Assembly	1		R97MV1155A24DHSGAP (incl. variants)
51-102603-01	Blower Motor, ECM 3.0 3/4hp	1		R97MV0855A21DHSGAP, R97MV1005A21DHSGAP, R97MV1155A24DHSGAP (incl. variants)
70-104182-05	Housing w/Blower Wheel	1		R97MV0603A17DHSGAP, R97MV0703A17DHSGAP (incl. variants)
70-104182-07	Housing w/Blower Wheel	1		R97MV0855A21DHSGAP, R97MV1005A21DHSGAP (incl. variants)
70-104182-09	Housing w/Blower Wheel	1		R97MV1155A24DHSGAP (incl. variants)
70-104157-86	Induced Draft Blower w/Gasket	1		All models
51-104389-01	Motor - PerfectSpeed - 1/2 hp	1		R97MV0603A17DHSGAP, R97MV0703A17DHSGAP (incl. variants)
70-19929-10	Motor Mount Arm w/Grommet	1/2		All models
70-19927-04	Motor Mount Band	1		All models

Electrical

Part No.	Description	Qty	Replaced By	Fits Models
62-105563-05	Integrated Furnace Control (IFC)	1		All models
46-24256-05	Power Factor Choke	1		R97MV0855A21DHSGAP, R97MV1005A21DHSGAP, R97MV1155A24DHSGAP (incl. variants)
46-102856-02K	Transformer Kit - 50VA	1		All models
47-104184-01K	Water Sensor Kit	1		All models
45-24371-58	Wire Assembly	1		All models
45-104317-01	Wire Assembly - ECM Motor Power	1		All models
45-105320-01	Wire Harness Assembly	1		All models
45-104318-01	Wiring Assembly - Jumper	1		R97MV0603A17DHSGAP, R97MV0703A17DHSGAP (incl. variants)
45-102785-01	Wiring Harness	1		All models

Valves & switches

Part No.	Description	Qty	Replaced By	Fits Models
47-105833-02	Limit Control - Manual Reset	1		All models
47-104465-03	Limit Switch - Auto Reset (Flanged Airstream)	1		R97MV0603A17DHSGAP, R97MV0855A21DHSGAP (incl. variants)
47-104465-01K	Limit Switch Kit - Auto Reset (Flanged Airstream)	1		R97MV0703A17DHSGAP (incl. variants)
47-104465-02K	Limit Switch Kit - Auto Reset (Flanged Airstream)	1		R97MV1005A21DHSGAP, R97MV1155A24DHSGAP (incl. variants)
42-106242-01	Pressure Switch (-0.35"/-0.25)	1		R97MV0703A17DHSGAP, R97MV1155A24DHSGAP (incl. variants)
42-106242-03	Pressure Switch (-0.50"/-0.40")	1		R97MV0603A17DHSGAP (incl. variants)
42-106243-01	Pressure Switch (-0.65"/-0.55")	1		R97MV0855A21DHSGAP, R97MV1005A21DHSGAP, R97MV1155A24DHSGAP (incl. variants)
42-106243-02	Pressure Switch (-0.70"/-0.60")	1		R97MV0603A17DHSGAP (incl. variants)
42-106243-03	Pressure Switch (-0.75"/-0.65")	1		R97MV0703A17DHSGAP (incl. variants)
42-106242-04	Pressure Switch (-1.00"/-0.90")	1		R97MV0603A17DHSGAP, R97MV0855A21DHSGAP, R97MV1005A21DHSGAP, R97MV1155A24DHSGAP (incl. variants)
42-106242-05	Pressure Switch (-1.15"/-0.98")	1		R97MV0703A17DHSGAP (incl. variants)
42-106242-02K	Pressure Switch Kit (-0.40"/-0.30")	1		R97MV0855A21DHSGAP, R97MV1005A21DHSGAP (incl. variants)

Gas

Part No.	Description	Qty	Replaced By	Fits Models
75-104227-06	Burner Assembly	1/2		All models
AS-104123-12	Burner Assembly	1		R97MV0603A17DHSGAP (incl. variants)
AS-104123-13	Burner Assembly	1		R97MV0703A17DHSGAP (incl. variants)
AS-104123-14	Burner Assembly	1		R97MV0855A21DHSGAP (incl. variants)
AS-104123-15	Burner Assembly	1		R97MV1005A21DHSGAP (incl. variants)
AS-104123-16	Burner Assembly	1		R97MV1155A24DHSGAP (incl. variants)
62-23543-08K	Flame Sensor Kit	1		All models
60-102787-85	Gas Valve Kit	1		All models
AS-104120-10	Heat Exchanger Assembly	1		R97MV0603A17DHSGAP (incl. variants)
AS-104120-18	Heat Exchanger Assembly	1		R97MV0855A21DHSGAP (incl. variants)
AS-104120-19	Heat Exchanger Assembly	1		R97MV1005A21DHSGAP (incl. variants)
AS-104120-21	Heat Exchanger Assembly	1		R97MV1155A24DHSGAP (incl. variants)
AS-104120-31	Heat Exchanger Assembly	1		R97MV0703A17DHSGAP (incl. variants)
62-24141-05K	Ignitor Kit - Direct Spark Ignition (DSI)	1		All models
62-22175-51	Orifice	1/2		All models

Cabinet & hardware

Part No.	Description	Qty	Replaced By	Fits Models
91-104555-01	Badge Assembly - Rheem	1		All models
63-106763-01	Black Oxide Square Drive Screw, 8-18 x 1/2 in.	1/4		All models
63-106763-02	Black Oxide Square Drive Screw, 8-18 x 1/4 in.	1		All models
AS-104135-01	Blower Shelf Assembly	1		R97MV0603A17DHSGAP, R97MV0703A17DHSGAP (incl. variants)
AS-104135-02	Blower Shelf Assembly	1		R97MV0855A21DHSGAP, R97MV1005A21DHSGAP (incl. variants)
AS-104135-03	Blower Shelf Assembly	1		R97MV1155A24DHSGAP (incl. variants)
63-19919-01	Bolt, 1/4-20 x 1-1/2 in.	1		All models
AS-104314-01	Bottom Plate Assembly	1		R97MV0603A17DHSGAP, R97MV0703A17DHSGAP (incl. variants)
AS-104314-02	Bottom Plate Assembly	1		R97MV0855A21DHSGAP, R97MV1005A21DHSGAP (incl. variants)
AS-104314-03	Bottom Plate Assembly	1		R97MV1155A24DHSGAP (incl. variants)
AE-104332-01	Bracket Door Mounting	1		R97MV0603A17DHSGAP, R97MV0703A17DHSGAP (incl. variants)
AE-104332-02	Bracket Door Mounting	1		R97MV0855A21DHSGAP, R97MV1005A21DHSGAP (incl. variants)
AE-104332-03	Bracket Door Mounting	1		R97MV1155A24DHSGAP (incl. variants)
AE-104121-02	Burner Rack	1		R97MV0603A17DHSGAP (incl. variants)
AE-104121-03	Burner Rack	1		R97MV0703A17DHSGAP (incl. variants)
AE-104121-04	Burner Rack	1		R97MV0855A21DHSGAP (incl. variants)
AE-104121-05	Burner Rack	1		R97MV1005A21DHSGAP (incl. variants)
AE-104121-06	Burner Rack	1		R97MV1155A24DHSGAP (incl. variants)
AE-104122-02	Burner Rack Cover	1		R97MV0603A17DHSGAP (incl. variants)
AE-104122-03	Burner Rack Cover	1		R97MV0703A17DHSGAP (incl. variants)
AE-104122-04	Burner Rack Cover	1		R97MV0855A21DHSGAP (incl. variants)
AE-104122-05	Burner Rack Cover	1		R97MV1005A21DHSGAP (incl. variants)
AE-104122-06	Burner Rack Cover	1		R97MV1155A24DHSGAP (incl. variants)
45-17055-13	Bushing - Strain Relief	1		All models
64-103686-03	Clamp - Wire Hose	1		
68-103546-01	Collector Box Gasket	1		R97MV1155A24DHSGAP (incl. variants)
68-103546-02	Collector Box Gasket	1		R97MV0855A21DHSGAP, R97MV1005A21DHSGAP (incl. variants)
68-103546-03	Collector Box Gasket	1		R97MV0603A17DHSGAP, R97MV0703A17DHSGAP (incl. variants)
68-104111-82	Collector Box Kit	1		R97MV0855A21DHSGAP (incl. variants)
68-104111-83	Collector Box Kit	1		R97MV1155A24DHSGAP (incl. variants)

Part No.	Description	Qty	Replaced By	Fits Models
68-104111-95	Collector Box Kit	1		R97MV0603A17DHSGAP (incl. variants)
68-104111-96	Collector Box Kit	1		R97MV0703A17DHSGAP (incl. variants)
68-104111-98	Collector Box Kit	1		R97MV1005A21DHSGAP (incl. variants)
AE-103589-01	Control Board Mounting Plate	1		All models
AS-104040-01	Door Assembly - Upper	1		R97MV0603A17DHSGAP, R97MV0703A17DHSGAP
AS-104040-31	Door Assembly - Upper	1		R97MV0603A17DHSGAP, R97MV0703A17DHSGAP (incl. variants)
AS-104040-32	Door Assembly - Upper	1		R97MV0855A21DHSGAP, R97MV1005A21DHSGAP (incl. variants)
AS-104040-33	Door Assembly - Upper	1		R97MV1155A24DHSGAP (incl. variants)
68-104374-31	Door Filler (Gray) - 17.5 in.	1		R97MV0603A17DHSGAP, R97MV0703A17DHSGAP (incl. variants)
68-104374-32	Door Filler (Gray) - 21.0 in.	1		R97MV0855A21DHSGAP, R97MV1005A21DHSGAP (incl. variants)
68-104374-33	Door Filler (Gray) - 24.5 in.	1		R97MV1155A24DHSGAP (incl. variants)
79-104393-01	Drain Tube	1		
79-104394-01	Drain Tube	1		
79-107210-01	EPDM Rubber Tubing (Bulk - Non-Salable)	1		All models
68-104413-01	Gasket - 25 ft.	3		All models
68-104382-01	Gasket - Blower Shelf (17.5 in.)	1		R97MV0603A17DHSGAP, R97MV0703A17DHSGAP (incl. variants)
68-104382-02	Gasket - Blower Shelf (21 in.)	1		R97MV0855A21DHSGAP, R97MV1005A21DHSGAP (incl. variants)
68-104382-03	Gasket - Blower Shelf (24.5 in.)	1		R97MV1155A24DHSGAP (incl. variants)
68-104151-01	Gasket - Condensate Trap	1		
AE-61951-54	Gasket - Door (17.5 in.)	1		R97MV0603A17DHSGAP, R97MV0703A17DHSGAP (incl. variants)
AE-61951-55	Gasket - Door (21 in.)	1		R97MV0855A21DHSGAP, R97MV1005A21DHSGAP (incl. variants)
AE-61951-56	Gasket - Door (24.5 in.)	1		R97MV1155A24DHSGAP (incl. variants)
68-104152-01	Gasket - Induced Draft Blower	1		All models
68-22079-03	Gasket - Neoprene (1/16 in. x 3/4 in.)	1	OBSOLETE	All models
68-22079-85	Gasket - Neoprene (1/8 in. x 3/4 in.) - 100 ft. Roll	2		All models
56-22114-06	Grommet - Gas Pipe	1		All models
63-17189-03	Hex Nut, 1/4-20, w/External Tooth Lock Washer	1		All models
10-61885-03	Ignitor Bracket	1		All models
10-61913-04	Ignitor Bracket	1		All models
68-103536-01	Insulation - Foil Back	1		R97MV0603A17DHSGAP, R97MV0703A17DHSGAP (incl. variants)
68-103536-02	Insulation - Foil Back	1		R97MV0855A21DHSGAP, R97MV1005A21DHSGAP (incl. variants)
68-103536-03	Insulation - Foil Back	1		R97MV1155A24DHSGAP (incl. variants)
68-103537-01	Insulation - Sound	1		R97MV0603A17DHSGAP, R97MV0703A17DHSGAP (incl. variants)
68-103537-02	Insulation - Sound	1		R97MV0855A21DHSGAP, R97MV1005A21DHSGAP (incl. variants)
68-103537-03	Insulation - Sound	1		R97MV1155A24DHSGAP (incl. variants)
AE-67925-01	Insulation Retainer	1		All models
AE-61475-03	Junction Box	1		All models
AE-61476-03	Juncton Box Cover	1		All models
PD644035	Latch & Handle Kit - Gas Furnace (Gray)	1		
64-104352-01	Latch Cam	1		All models
64-104351-03	Latch Handle/Stud (Gray)	1		All models
AE-104192-01	Left Jacket Baffle	1		R97MV0703A17DHSGAP, R97MV1005A21DHSGAP (incl. variants)
AE-104192-03	Left Jacket Baffle	1		R97MV0603A17DHSGAP (incl. variants)
AE-104192-04	Left Jacket Baffle	1		R97MV0855A21DHSGAP (incl. variants)

Part No.	Description	Qty	Replaced By	Fits Models
AE-104192-06	Left Jacket Baffle	1		R97MV1155A24DHSGAP (incl. variants)
AS-104041-02X	Lower Door/Label Kit	1		R97MV0855A21DHSGAP, R97MV1005A21DHSGAP (incl. variants)
63-101978-01	Machine Screw, 1/4-20 x 1 in.	1/2		All models
81-104116-12	Manifold	1		R97MV0603A17DHSGAP (incl. variants)
81-104116-13	Manifold	1		R97MV0703A17DHSGAP (incl. variants)
81-104116-14	Manifold	1		R97MV0855A21DHSGAP (incl. variants)
81-104116-15	Manifold	1		R97MV1005A21DHSGAP (incl. variants)
81-104116-16	Manifold	1		R97MV1155A24DHSGAP (incl. variants)
AS-104528-12	Manifold/Orifice Assembly (4 Burner)	1		R97MV0603A17DHSGAP (incl. variants)
47-104778-13	Model Data Memory Card	1		R97MV0603A17DHSGAP (incl. variants)
47-104778-14	Model Data Memory Card	1		R97MV0703A17DHSGAP (incl. variants)
47-104778-15	Model Data Memory Card	1		R97MV0855A21DHSGAP (incl. variants)
47-104778-16	Model Data Memory Card	1		R97MV1005A21DHSGAP (incl. variants)
47-104778-17	Model Data Memory Card	1		R97MV1155A24DHSGAP (incl. variants)
91-105037-01	Nameplate - 17.5 in. 90+ Prestige W/Econet	1		R97MV0603A17DHSGAP, R97MV0703A17DHSGAP (incl. variants)
91-105037-02	Nameplate - 21 in. 90+ Prestige W/Econet	1		R97MV0855A21DHSGAP, R97MV1005A21DHSGAP (incl. variants)
91-105037-03	Nameplate - 24.5 in. 90+ Prestige W/Econet	1		R97MV1155A24DHSGAP (incl. variants)
AS-104040-03X	Panel/Label Kit	1		R97MV1155A24DHSGAP
AS-104041-01X	Panel/Label Kit	1		R97MV0603A17DHSGAP, R97MV0703A17DHSGAP (incl. variants)
AS-104041-03X	Panel/Label Kit	1		R97MV1155A24DHSGAP (incl. variants)
68-104446-01	Parts Bag	1		All models
68-106221-01	Parts Bag	1		All models
AE-104190-01	Rear Jacket Baffle	1		R97MV0603A17DHSGAP, R97MV0703A17DHSGAP (incl. variants)
AE-104190-02	Rear Jacket Baffle	1		R97MV0855A21DHSGAP, R97MV1005A21DHSGAP (incl. variants)
AE-104190-03	Rear Jacket Baffle	1		R97MV1155A24DHSGAP (incl. variants)
45-104315-01	Rectangular Flush Mount Plug	1		All models
AE-104191-01	Right Jacket Baffle	1		R97MV0703A17DHSGAP, R97MV1005A21DHSGAP (incl. variants)
AE-104191-03	Right Jacket Baffle	1		R97MV0603A17DHSGAP (incl. variants)
AE-104191-04	Right Jacket Baffle	1		R97MV0855A21DHSGAP (incl. variants)
AE-104191-06	Right Jacket Baffle	1		R97MV1155A24DHSGAP (incl. variants)
45-103596-01	Round Flush Mount Plug	1		All models
45-103596-03	Round Flush Mount Plug	1		All models
45-103596-04	Round Flush Mount Plug	1		All models
45-103596-06	Round Flush Mount Plug	1		All models
63-103934-02	Screw - Plastic Threading Hex Head (8-18 x .375)	1		All models
63-104523-01	Screw - Sheet Metal - 8-32 x 1/2 in.	7/8/10		All models
63-104375-01	Screw - Sheet Metal - 8-32 x 3.3 in.	1		All models
63-22153-11	Screws - Sheet Metal. 8-18 x 3/4 in.	3/4		All models
67-24036-01	Sealant	1		All models
63-106762-01	Sheet Metal Screw - Jacket Trim Head Thread Point	2		All models
63-22338-02	Sheet Metal Screw, 6-20 x 1/4 in.	1		All models
63-22153-05	Sheet Metal Screw, 8-18 x 3/8 in.	3/4		All models
63-24368-03	Sheet Metal Screw, 8-18 x 1/2 in.	1/4		All models
63-24368-01	Sheet Metal Screw, 8-18 x 1/4 in.	1/2/3		All models
68-21893-04	Sight Glass	1		All models
45-18515-01	Snap-In Bushing - Conductor Protection	1		All models

Part No.	Description	Qty	Replaced By	Fits Models
63-22429-01	Stainless Steel Sheet Metal Screw, 8-18 x 1/2 in.	1/2/4/5		All models
AE-61951-51	Stripping - Cut Length	1		All models
AE-104127-01	Support - Heat Exchanger	1		R97MV0603A17DHSGAP, R97MV0703A17DHSGAP (incl. variants)
AE-104127-02	Support - Heat Exchanger	1		R97MV0855A21DHSGAP, R97MV1005A21DHSGAP (incl. variants)
AE-104127-03	Support - Heat Exchanger	1		R97MV1155A24DHSGAP (incl. variants)
42-22692-13	Switch - Push Button	1		All models
79-22461-02	Tee - 3/16 in. x 3/16 in. x 3/16 in.	1		All models
AS-104134-01	Top Plate Assembly	1		R97MV0603A17DHSGAP, R97MV0703A17DHSGAP (incl. variants)
AS-104134-02	Top Plate Assembly	1		R97MV0855A21DHSGAP, R97MV1005A21DHSGAP (incl. variants)
AS-104134-03	Top Plate Assembly	1		R97MV1155A24DHSGAP (incl. variants)
68-24022-03	Transition - Gasket	1		All models
68-104133-02	Transition - Outlet Air	1		All models
68-104145-03	Transition - Outlet Air Elbow	1		All models
AS-104040-02X	Upper Door/Label Kit	1		R97MV0855A21DHSGAP, R97MV1005A21DHSGAP
56-103685-01	Vinyl Cap	1		All models
56-103685-02	Vinyl Cap - .490 in.	1		All models
63-26198-02	Washer - Flat (Fender)	1/2		All models
68-104346-02	Water Trap - Condensate Drain	1		
64-17606-01	Wire & Cable Tie - Nylon Black - 8 in.	1		All models