Rheem RACBYB Package Unit Replacement Parts List

Parts list RP-RHM-RACBYB | Updated Nov 2026 | 152 parts | 11 model numbers

Genuine Rheem OEM part numbers for the models listed below, compiled from Rheem Manufacturing's service parts catalog. Quantities are per unit. Where Rheem has replaced a part number, the current number is shown under Replaced By. Always confirm the full model and serial number of the unit before ordering.

Models covered

RACBYB024AJT000NA, RACBYB030ACT000NA, RACBYB030AJT000NA, RACBYB036ACT000NA, RACBYB036AJT000NA, RACBYB042ACT000NA, RACBYB042AJT000NA, RACBYB048ACT000NA, RACBYB048AJT000NA, RACBYB060ACT000NA, RACBYB060AJT000NA

RACBYB parts breakdown: ADS-105128-18B 10 Compressor Area 2 2C2.5 2C3.5 Ton Parts Lists

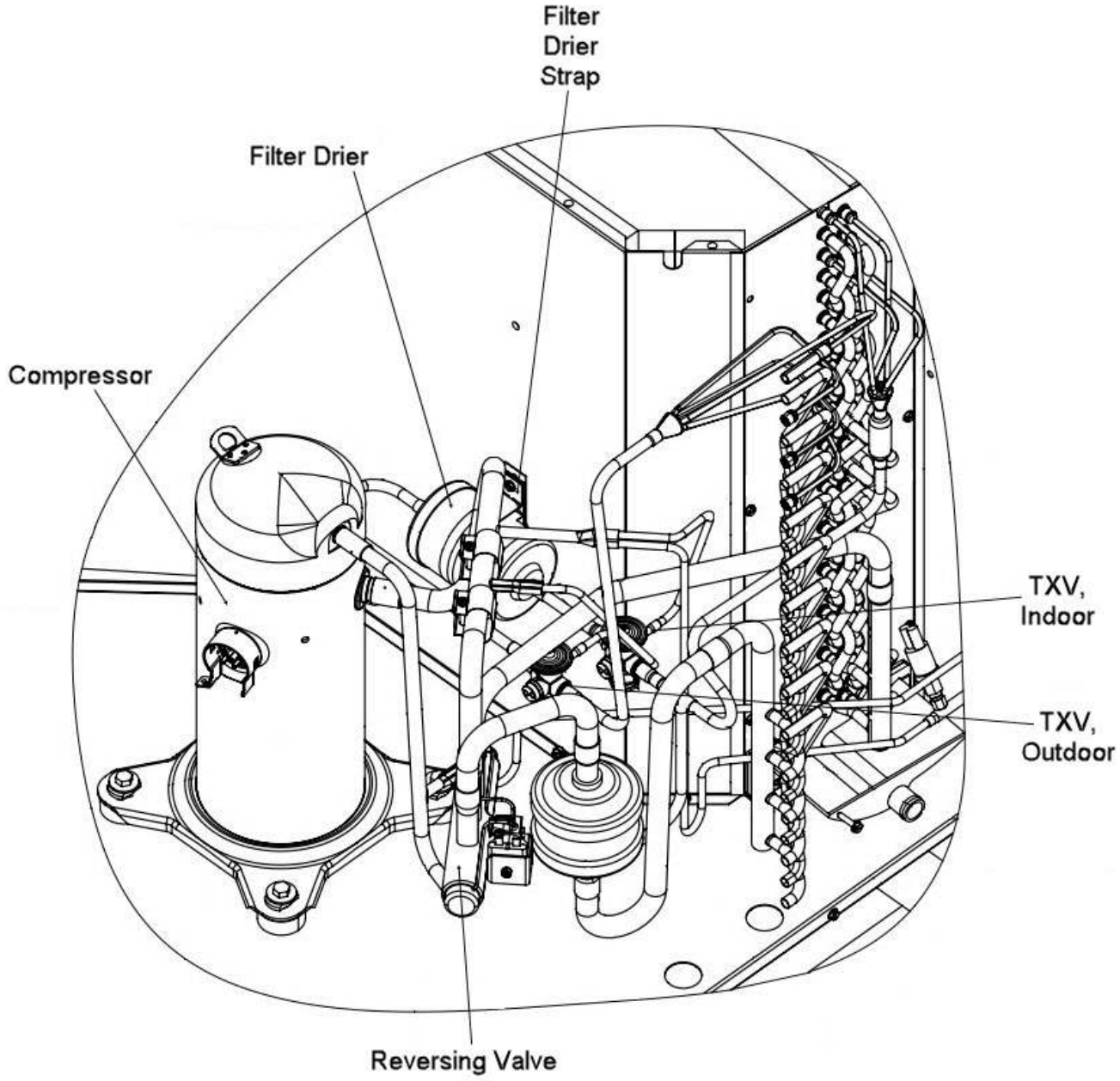

RACBYB parts breakdown: ADS-105128-18B 11 Compressor Area 3 2C4 2C5 Ton Parts Lists

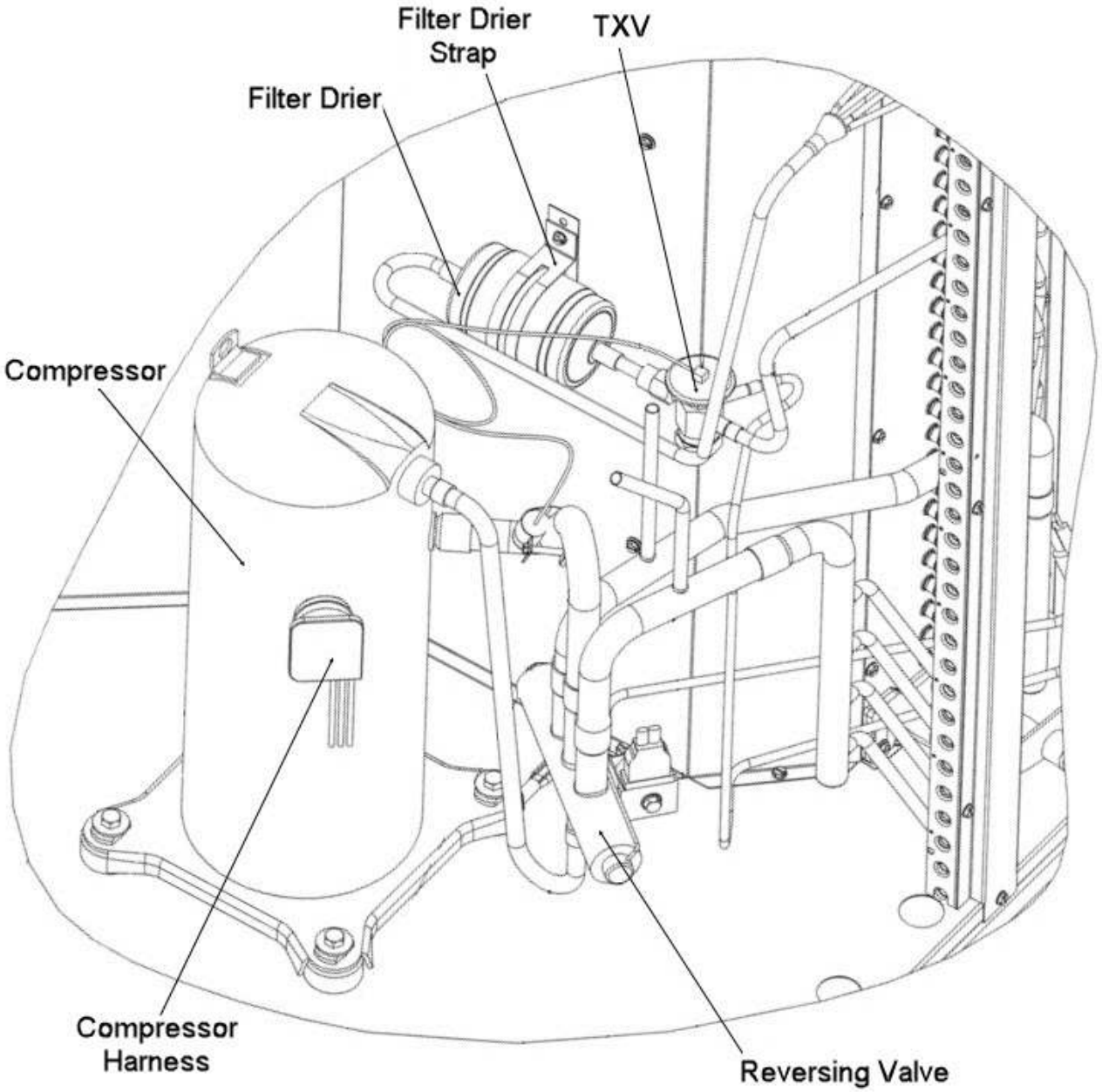

RACBYB parts breakdown: ADS-105128-18B 1 Exterior Cabinet

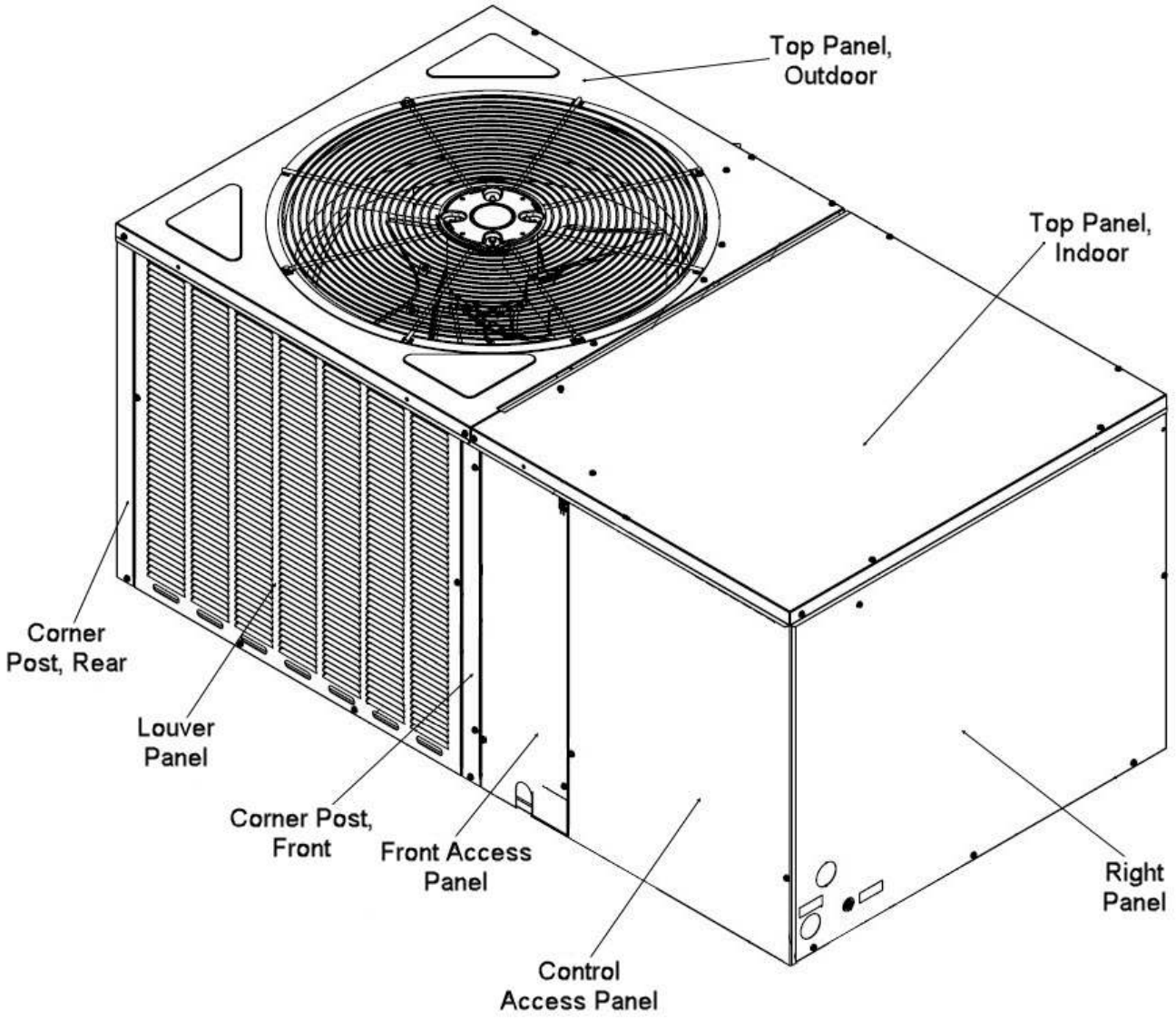

RACBYB parts breakdown: ADS-105128-18B 2 Exterior Cabinet 282 29

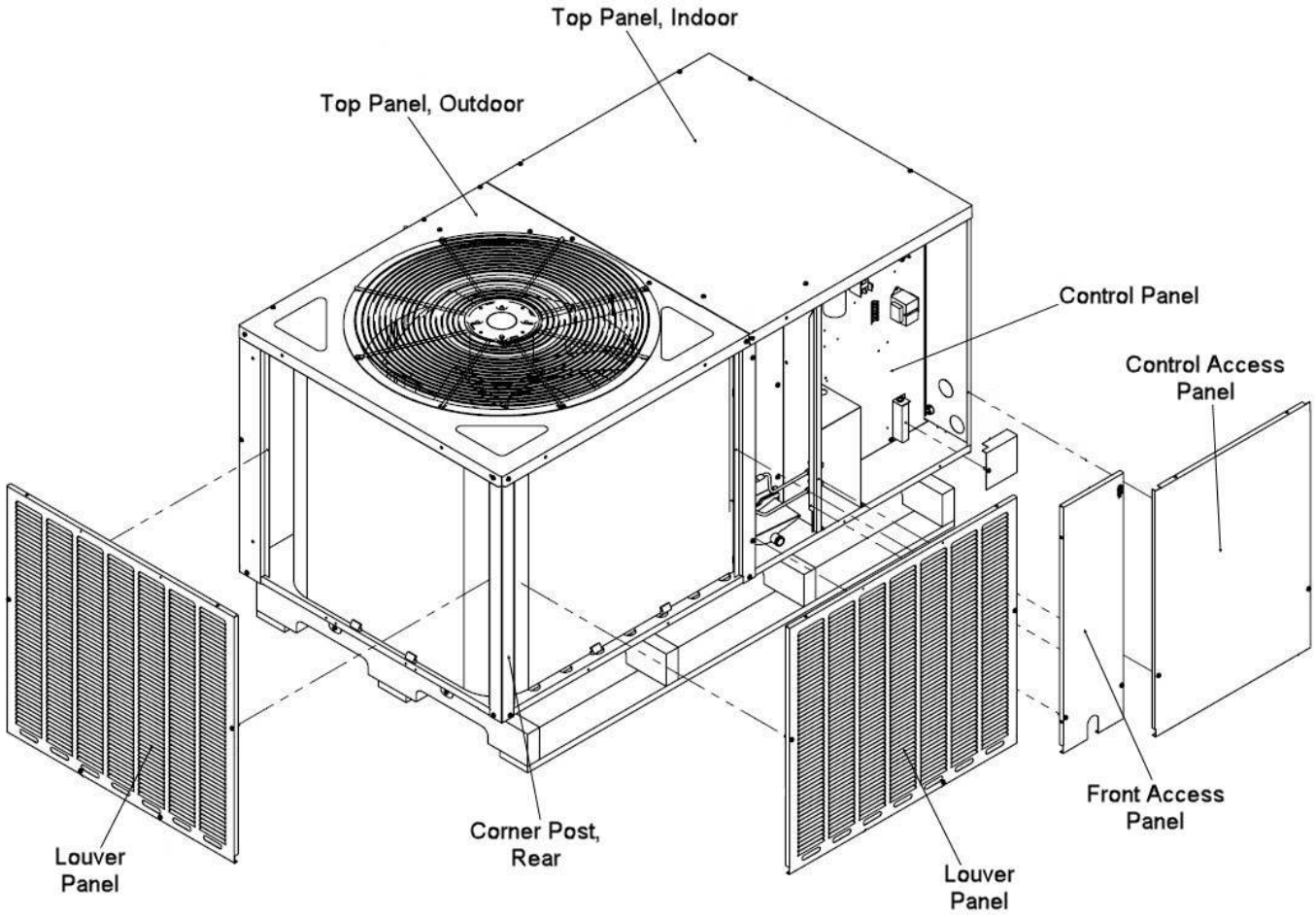

RACBYB parts breakdown: ADS-105128-18B 3 Outdoor Fan

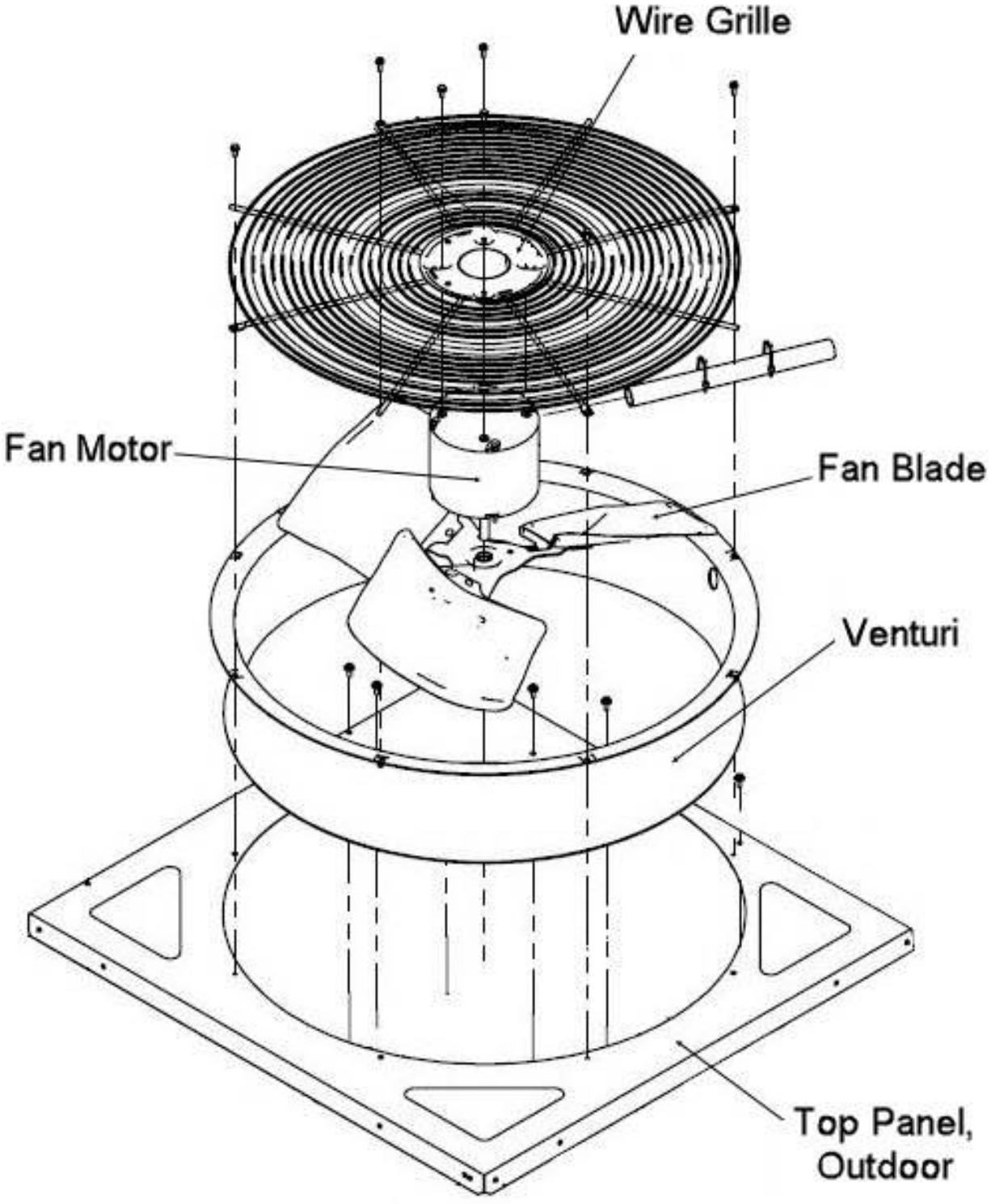

RACBYB parts breakdown: ADS-105128-18B 4 Internal Cabinet 281 29

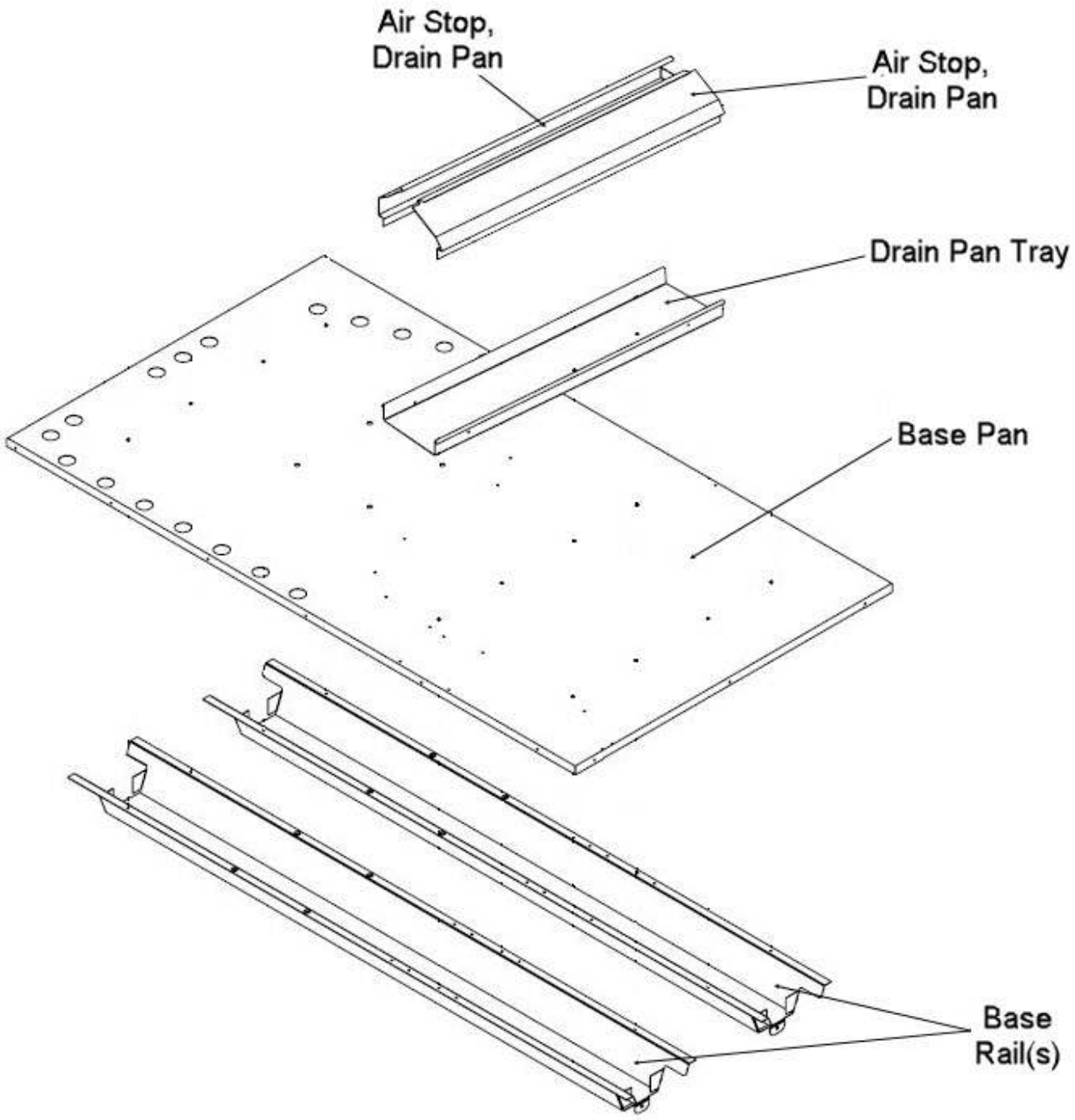

RACBYB parts breakdown: ADS-105128-18B 5 Internal Cabinet 282 29

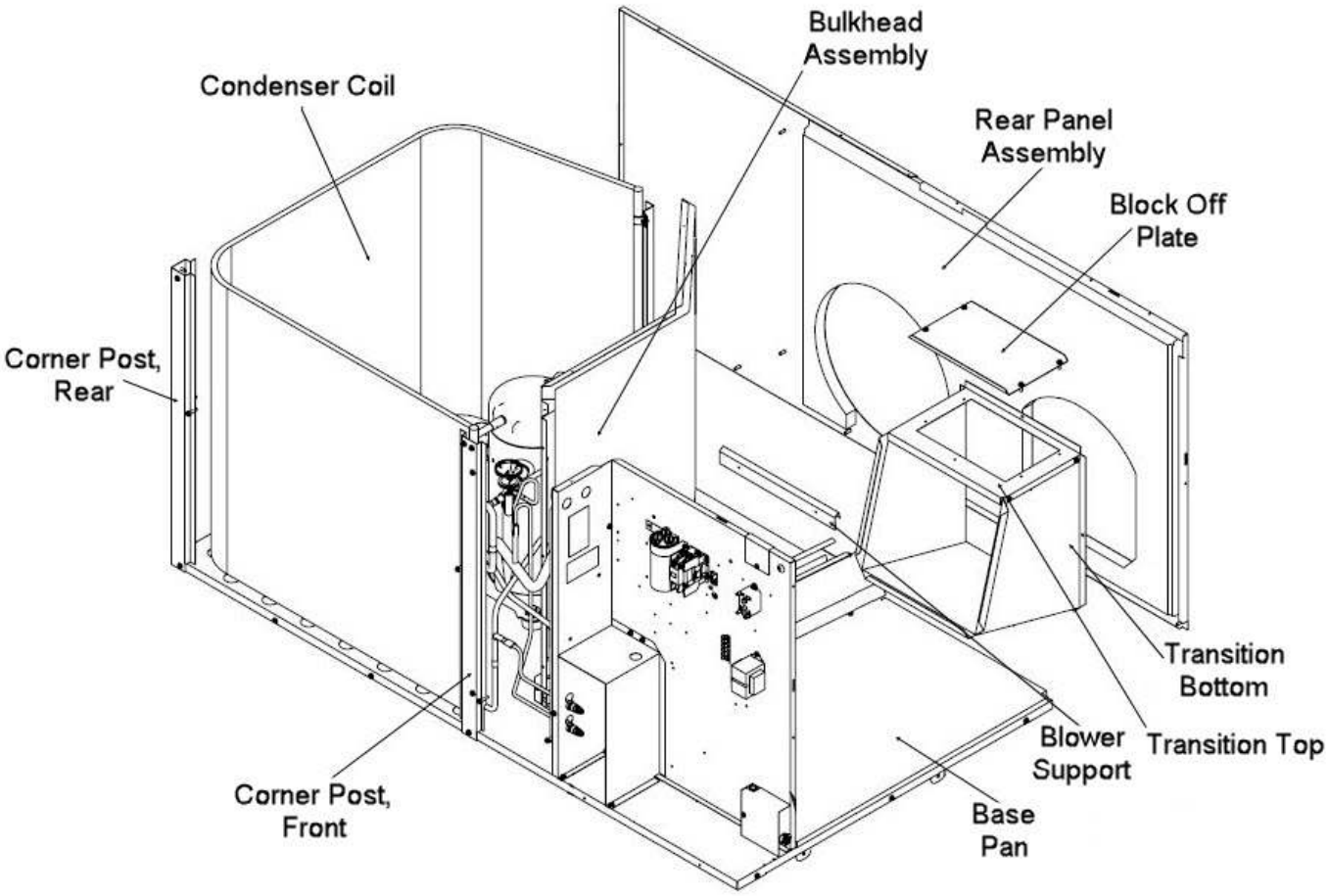

RACBYB parts breakdown: ADS-105128-18B 6 Internal Cabinet 283 29

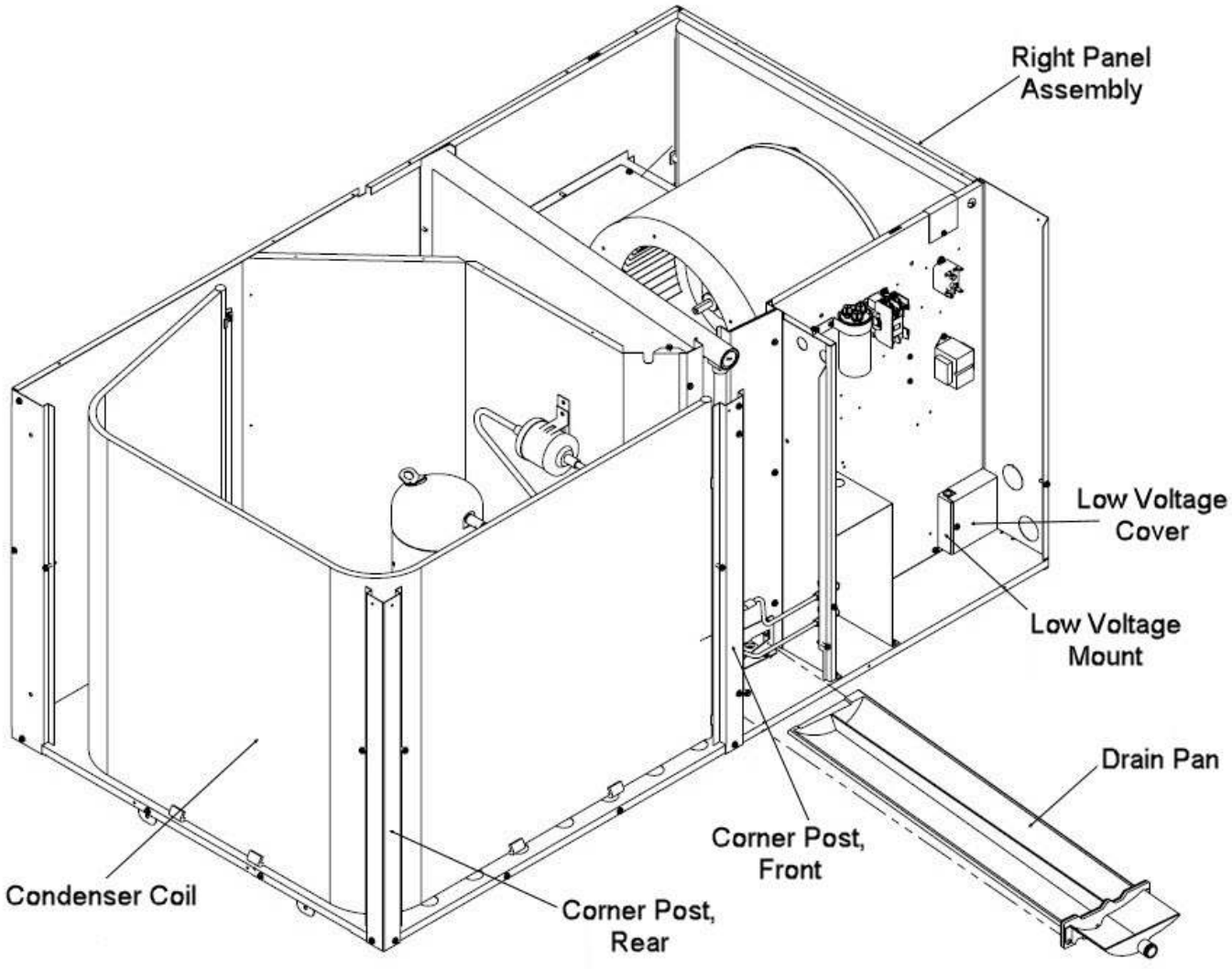

RACBYB parts breakdown: ADS-105128-18B 7 Internal Cabinet 284 29

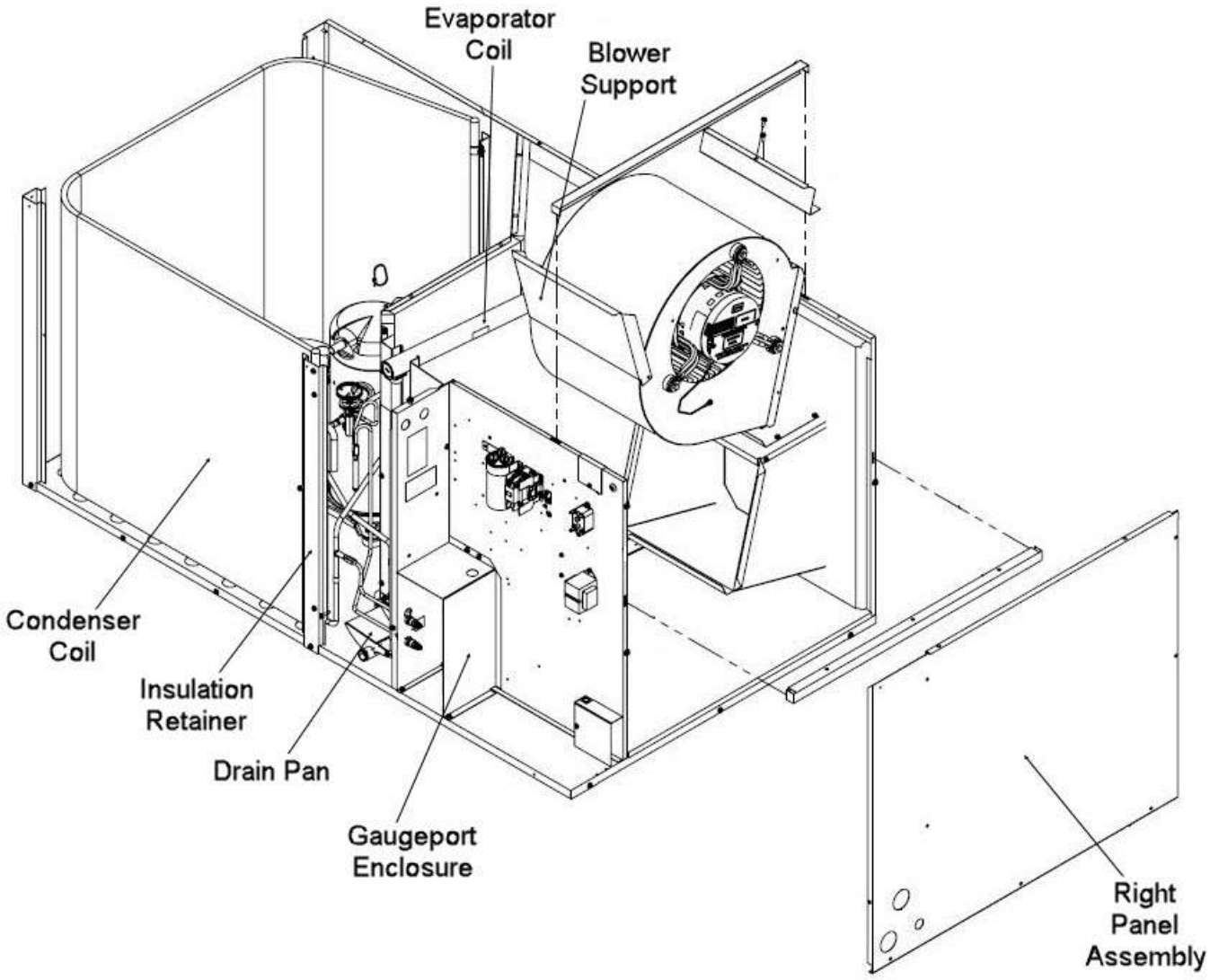

RACBYB parts breakdown: ADS-105128-18B 8 Control Panel

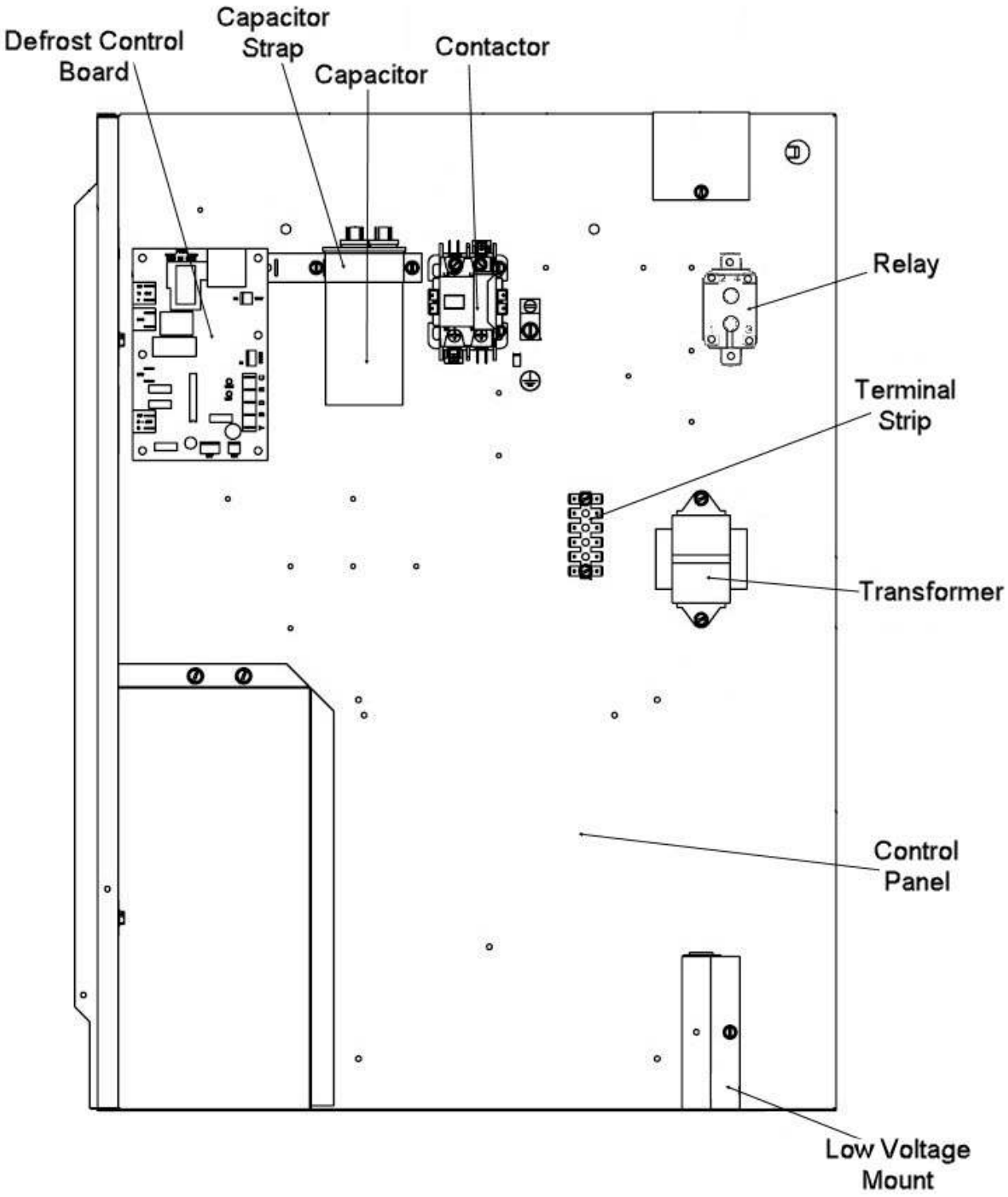

RACBYB parts breakdown: ADS-105128-18B 9 Blower Assembly

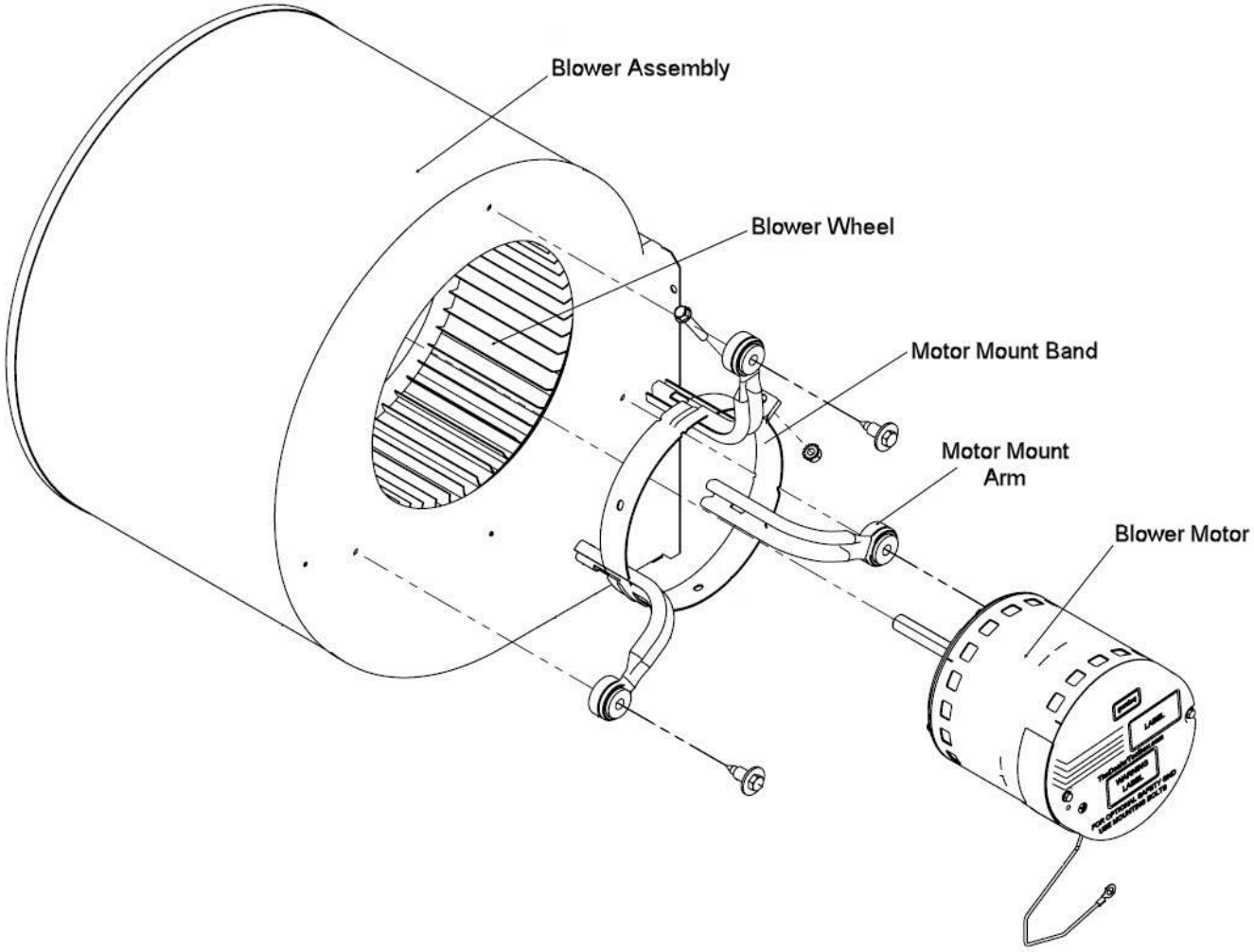

Compressor

Part No.	Description	Qty	Replaced By	Fits Models
55-107225-250	Compressor	1		RACBYB030AJT000NA
55-107225-252	Compressor	1		RACBYB036AJT000NA
55-107225-254	Compressor	1		RACBYB042AJT000NA
55-107225-271	Compressor	1		RACBYB036ACT000NA
55-107225-273	Compressor	1		RACBYB042ACT000NA
55-107225-274	Compressor	1		RACBYB048ACT000NA
55-107225-275	Compressor	1		RACBYB060ACT000NA
55-109517-52	Compressor	1		RACBYB024AJT000NA
55-107225-283	Compressor - LG	1		RACBYB030ACT000NA
55-107225-256	Compressor - YBH042KAA - LG	1		RACBYB048AJT000NA
55-107225-258	Compressor - YBH051KAA - LG	1		RACBYB060AJT000NA
63-20072-03	Compressor Mounting Screw (1-1/2 in. long)	1		All models
45-107231-02K	Compressor Plug Assembly Kit - LG	1		RACBYB030ACT000NA, RACBYB030AJT000NA, RACBYB036ACT000NA, RACBYB036AJT000NA, RACBYB042ACT000NA, RACBYB042AJT000NA, RACBYB048ACT000NA, RACBYB048AJT000NA, RACBYB060ACT000NA, RACBYB060AJT000NA
45-100834-80	Copeland Molded Plug Wiring Harness	1		RACBYB024AJT000NA
56-18518-06	Mounting Grommet - Compressor	1		All models

Motors & fans

Part No.	Description	Qty	Replaced By	Fits Models
70-100840-01	Blower Assembly	1		RACBYB024AJT000NA, RACBYB030ACT000NA, RACBYB030AJT000NA, RACBYB036ACT000NA, RACBYB036AJT000NA
70-100840-02	Blower Assembly-Housing and Wheel only	1		RACBYB042ACT000NA, RACBYB042AJT000NA, RACBYB048ACT000NA, RACBYB048AJT000NA, RACBYB060ACT000NA, RACBYB060AJT000NA
51-100998-38	Condenser Motor - 1/2 hp 208-230/1/50-60 (1075 rpm/1 speed)	1		RACBYB048ACT000NA, RACBYB048AJT000NA, RACBYB060ACT000NA, RACBYB060AJT000NA
51-102500-10	Condenser Motor - 1/3 hp 208-230/1/60 (825 rpm/1 speed)	1		RACBYB024AJT000NA, RACBYB030ACT000NA, RACBYB030AJT000NA, RACBYB036ACT000NA, RACBYB036AJT000NA, RACBYB042ACT000NA, RACBYB042AJT000NA
70-101323-69	Fan Blade	1		RACBYB024AJT000NA, RACBYB030ACT000NA, RACBYB030AJT000NA, RACBYB036ACT000NA, RACBYB036AJT000NA, RACBYB042ACT000NA, RACBYB042AJT000NA
70-101323-77	Fan Blade - 23.95 in. - 21 degree Pitch	1		RACBYB048ACT000NA, RACBYB048AJT000NA, RACBYB060ACT000NA, RACBYB060AJT000NA
51-108728-136	Motor - Ensite Air (208-230V - 1/2 hp)	1		RACBYB030ACT000NA, RACBYB030AJT000NA
51-108730-123	Motor - Ensite Air (230V - 1 hp)	1		RACBYB060ACT000NA, RACBYB060AJT000NA
51-108728-134	Motor - Ensite Air (230V - 1/2 hp)	1		RACBYB024AJT000NA
51-108728-138	Motor - Ensite Air (230V - 1/2 hp)	1		RACBYB036ACT000NA, RACBYB036AJT000NA
51-106547-00	Motor - SelecTech Gen 3 (230V - 1 hp) - BLANK	1		RACBYB060ACT000NA, RACBYB060AJT000NA
51-106545-00	Motor - SelecTech Gen 3 (230V - 1/2 hp) - BLANK	1		RACBYB024AJT000NA, RACBYB030ACT000NA, RACBYB030AJT000NA, RACBYB036ACT000NA, RACBYB036AJT000NA
51-106546-59	Motor - SelecTech Gen 3 (230V - 3/4 hp)	1		RACBYB042ACT000NA, RACBYB042AJT000NA, RACBYB048ACT000NA, RACBYB048AJT000NA
51-106546-00	Motor - SelecTech Gen 3 (230V - 3/4 hp) - BLANK	1		RACBYB042ACT000NA, RACBYB042AJT000NA, RACBYB048ACT000NA, RACBYB048AJT000NA
70-19929-09	Motor Mount Arm w/Grommet	1		All models
70-19927-03	Motor Mount Band	1		All models

Electrical

Part No.	Description	Qty	Replaced By	Fits Models
43-25136-08	Capacitor - 15/370 Single Round	1		RACBYB048ACT000NA, RACBYB060ACT000NA

Part No.	Description	Qty	Replaced By	Fits Models
43-25133-21	Capacitor - 30/5/370 Dual Round	1		RACBYB024AJT000NA
43-25133-44	Capacitor - 40/5/370 Dual Round	1		RACBYB030AJT000NA
43-25133-06	Capacitor - 45/5/370 Dual Round	1		RACBYB036AJT000NA
43-25133-16	Capacitor - 45/5/440 Dual Round	1		RACBYB042AJT000NA
43-101666-59	Capacitor - 5/370 Single Round	1		RACBYB030ACT000NA, RACBYB036ACT000NA, RACBYB042ACT000NA
43-101665-64	Capacitor - 70/15/370 Dual Round	1		RACBYB048AJT000NA
43-101665-67	Capacitor - 70/15/440 Dual Round	1		RACBYB060AJT000NA
42-109499-06K	Contactor 32A XMC0-321 1P 1PH A2L	1		RACBYB024AJT000NA, RACBYB030AJT000NA, RACBYB036AJT000NA, RACBYB042AJT000NA, RACBYB048AJT000NA
42-109499-08K	Contactor 32A XMC0-323 3P 3PH A2L	1		RACBYB030ACT000NA, RACBYB036ACT000NA, RACBYB042ACT000NA, RACBYB048ACT000NA, RACBYB060ACT000NA
42-109499-10K	Contactor 40A XMC0-401 1P 1PH A2L	1		RACBYB060AJT000NA
45-19000-01	Ground Lug	1		All models
45-18058-07	Ivory Twist-On Wire Connector - 24-16 AWG	1		All models
47-109642-01	Sensor A2L (Sensirion)	1		RACBYB048ACT000NA, RACBYB048AJT000NA, RACBYB060ACT000NA, RACBYB060AJT000NA
45-23591-01	Terminal Strip	1		All models
46-100836-05	Transformer	1		All models
45-104222-03	Wiring Harness	1		All models
45-109867-13	Wiring Harness Assembly - RDS	1		RACBYB048ACT000NA, RACBYB048AJT000NA, RACBYB060ACT000NA, RACBYB060AJT000NA

Valves & switches

Part No.	Description	Qty	Replaced By	Fits Models
61-101821-02	Bulkhead Valve Assembly	1		All models
47-102290-01K	High Pressure Limit Kit - Auto Reset	1		All models
61-18551-01	Valve Core	1		All models

Coil & refrigeration

Part No.	Description	Qty	Replaced By	Fits Models
82-101358-01	Beaded Tube Distributor - 3/8 in. x 1/4 in. x 1/4 in.	1		All models
AS-107995-01	Bent Condenser Coil Assembly	1		RACBYB030ACT000NA, RACBYB030AJT000NA, RACBYB036ACT000NA, RACBYB036AJT000NA, RACBYB042ACT000NA, RACBYB042AJT000NA
AS-107994-01	Coil Assembly	1		RACBYB024AJT000NA
AS-107997-01	Coil Assembly	1		RACBYB048ACT000NA, RACBYB048AJT000NA
61-110265-01	Expansion Valve (TXV)	1		RACBYB030ACT000NA, RACBYB030AJT000NA
61-110265-02	Expansion Valve (TXV)	1		RACBYB042ACT000NA, RACBYB042AJT000NA
61-110265-03	Expansion Valve (TXV)	1		RACBYB048ACT000NA, RACBYB048AJT000NA
61-110265-04	Expansion Valve (TXV)	1		RACBYB060ACT000NA, RACBYB060AJT000NA
AS-107138-01	Micro Channel Coil - Bent Assembly	1		RACBYB060ACT000NA, RACBYB060AJT000NA
AS-110266-01	Micro Channel Evaporator Assembly 20MM	1		RACBYB024AJT000NA, RACBYB030ACT000NA, RACBYB030AJT000NA
AS-110266-03	Micro Channel Evaporator Assembly 25MM	1		RACBYB036ACT000NA, RACBYB036AJT000NA
AS-110266-05	Micro Channel Evaporator Assembly 25MM	1		RACBYB048ACT000NA, RACBYB048AJT000NA
AS-110266-04	Micro Channel Evaporator Assembly 32MM	1		RACBYB042ACT000NA, RACBYB042AJT000NA
AS-110266-06	Micro Channel Evaporator Assembly 32MM	1		RACBYB060ACT000NA, RACBYB060AJT000NA
83-25151-41	PROTECH Liquid Line Filter Drier (Uni-directional)	1		All models
82-40832-03	Reducer (1/2 to 3/8)	1		RACBYB060ACT000NA, RACBYB060AJT000NA
61-110300-03	Thermostatic Expansion Valve (TXV) - HXCE Series	1		RACBYB036ACT000NA, RACBYB036AJT000NA
61-110300-05	Thermostatic Expansion Valve (TXV) - Indoor (Cooling)	1		RACBYB024AJT000NA

Part No.	Description	Qty	Replaced By	Fits Models
64-21106-02	TXV Bulb Strap Mounting Kit	1		All models

Cabinet & hardware

Part No.	Description	Qty	Replaced By	Fits Models
83-100635-04	Access Valve Cap	1		All models
68-100801-24	Adhesive Insulation Stripping - 1-1/2 in. x 18 in. x 1/4 in.	1		RACBYB030ACT000NA, RACBYB030AJT000NA, RACBYB036ACT000NA, RACBYB036AJT000NA, RACBYB042ACT000NA, RACBYB042AJT000NA, RACBYB048ACT000NA, RACBYB048AJT000NA, RACBYB060ACT000NA, RACBYB060AJT000NA
68-100801-23	Adhesive Insulation Stripping - 1-1/2 in. x 30 in. x 1/4 in.	1		All models
10-100810-02	Air Stop - Rear	1		RACBYB048ACT000NA, RACBYB048AJT000NA
AE-107955-01	Air Stop - Rear	1		RACBYB048ACT000NA, RACBYB048AJT000NA, RACBYB060ACT000NA, RACBYB060AJT000NA
AE-107955-02	Air Stop - Rear	1		RACBYB024AJT000NA, RACBYB030ACT000NA, RACBYB030AJT000NA, RACBYB036ACT000NA, RACBYB036AJT000NA, RACBYB042ACT000NA, RACBYB042AJT000NA
AE-100825-03	Air Stop Drain Pan	1		All models
10-102792-01	Base Rail	1		All models
AE-107958-01H	Basepan	1		All models
AE-100818-01	Blower Support	1		All models
AE-100818-02	Blower Support	1		All models
63-19919-01	Bolt, 1/4-20 x 1-1/2 in.	1		All models
AS-107952-01	Bulkhead Assembly	1		RACBYB048ACT000NA, RACBYB048AJT000NA, RACBYB060ACT000NA, RACBYB060AJT000NA
AS-107952-02	Bulkhead Assembly	1		RACBYB024AJT000NA, RACBYB030ACT000NA, RACBYB030AJT000NA, RACBYB036ACT000NA, RACBYB036AJT000NA, RACBYB042ACT000NA, RACBYB042AJT000NA
45-17055-03	Bushing - Strain Relief	1		RACBYB048ACT000NA, RACBYB048AJT000NA, RACBYB060ACT000NA, RACBYB060AJT000NA
45-17055-06	Bushing - Strain Relief	1		All models
45-17055-07	Bushing - Strain Relief	1	OBSOLETE	All models
45-17055-13	Bushing - Strain Relief	1		All models
64-101148-06	Cable Tie - Double Loop, 7.6"	1		All models
AE-50892-81	Capacitor Strap	1		All models
AS-108009-01	Control Panel Insulation Assembly	1		RACBYB048ACT000NA, RACBYB048AJT000NA, RACBYB060ACT000NA, RACBYB060AJT000NA
AS-108009-02	Control Panel Insulation Assembly	1		RACBYB024AJT000NA, RACBYB030ACT000NA, RACBYB030AJT000NA, RACBYB036ACT000NA, RACBYB036AJT000NA, RACBYB042ACT000NA, RACBYB042AJT000NA
AE-100839-02	Cover - Low Voltage	1		All models
68-100808-02	Drain Pan	1		All models
68-100846-02	Drain Trap Assembly	1		All models
AE-100809-02H	Drainpan Tray	1		RACBYB024AJT000NA, RACBYB030ACT000NA, RACBYB030AJT000NA, RACBYB042ACT000NA, RACBYB042AJT000NA, RACBYB048ACT000NA, RACBYB048AJT000NA, RACBYB060ACT000NA, RACBYB060AJT000NA
58-100850-01	Duct Ring - 14 in.	1		All models
AE-101352-01	Enclosure - Gauge Port	1		All models
AE-102132-01	Filter Drier Strap	1		All models
68-42246-01	Gasket - 1,250 ft. long x 1/8 in. thick x 1/2 in. wide	1		All models
68-22079-06	Gasket - Neoprene (1/4 in. x 1/2 in.)	1		All models
63-22368-01	Hex Lock Nut, 7/16 x 20	1		All models
63-17189-03	Hex Nut, 1/4-20, w/External Tooth Lock Washer	1		All models
AE-100831-01	Insulation Retainer	1	OBSOLETE	All models

Part No.	Description	Qty	Replaced By	Fits Models
AE-100831-02	Insulation Retainer	1		RACBYB024AJT000NA, RACBYB030ACT000NA, RACBYB030AJT000NA, RACBYB036ACT000NA, RACBYB036AJT000NA, RACBYB042ACT000NA, RACBYB042AJT000NA
AE-100831-03	Insulation Retainer	1		RACBYB048ACT000NA, RACBYB048AJT000NA, RACBYB060ACT000NA, RACBYB060AJT000NA
AE-100831-05	Insulation Retainer Bulkhead	1		RACBYB024AJT000NA, RACBYB030ACT000NA, RACBYB030AJT000NA, RACBYB036ACT000NA, RACBYB036AJT000NA, RACBYB042ACT000NA, RACBYB042AJT000NA
68-106510-01	Insulation Wrap -1-5/8 I.D. x 1/2 in. Wall Thickness x 4-1/2 in.	1		All models
AE-100839-01	Mount - Low Voltage	1		All models
45-22926-03	Nylon Plug	1		RACBYB024AJT000NA, RACBYB030ACT000NA, RACBYB030AJT000NA, RACBYB036ACT000NA, RACBYB036AJT000NA, RACBYB042ACT000NA, RACBYB042AJT000NA
AS-100820-02H	Panel	1		RACBYB048ACT000NA, RACBYB048AJT000NA, RACBYB060ACT000NA, RACBYB060AJT000NA
AS-100823-01H	Panel - Access	1		RACBYB024AJT000NA, RACBYB030ACT000NA, RACBYB030AJT000NA, RACBYB036ACT000NA, RACBYB036AJT000NA, RACBYB042ACT000NA, RACBYB042AJT000NA
AE-100824-01H	Panel - Access Controls	1		RACBYB024AJT000NA, RACBYB030ACT000NA, RACBYB030AJT000NA, RACBYB036ACT000NA, RACBYB036AJT000NA, RACBYB042ACT000NA, RACBYB042AJT000NA
AE-100824-02H	Panel - Access Controls	1		RACBYB048ACT000NA, RACBYB048AJT000NA, RACBYB060ACT000NA, RACBYB060AJT000NA
AE-100823-02H	Panel - Access Front	1		RACBYB048ACT000NA, RACBYB048AJT000NA, RACBYB060ACT000NA, RACBYB060AJT000NA
AE-100830-01H	Panel - Louver	1		RACBYB024AJT000NA, RACBYB030ACT000NA, RACBYB030AJT000NA, RACBYB036ACT000NA, RACBYB036AJT000NA, RACBYB042ACT000NA, RACBYB042AJT000NA
AS-100830-03H	Panel - Louver	1		RACBYB048ACT000NA, RACBYB048AJT000NA, RACBYB060ACT000NA, RACBYB060AJT000NA
AE-100816-01	Plate - Block-Off	1		All models
AE-100842-01	Plate Heater Kit Delete	1		All models
AE-106773-01H	Post - Corner	1		RACBYB048ACT000NA, RACBYB048AJT000NA, RACBYB060ACT000NA, RACBYB060AJT000NA
AE-100821-03H	Post - Front	1		RACBYB048ACT000NA, RACBYB048AJT000NA, RACBYB060ACT000NA, RACBYB060AJT000NA
AE-107946-02H	Post - Front Corner	1		RACBYB024AJT000NA, RACBYB030ACT000NA, RACBYB030AJT000NA, RACBYB036ACT000NA, RACBYB036AJT000NA, RACBYB042ACT000NA, RACBYB042AJT000NA
AE-107945-01H	Post - Rear Corner	1		RACBYB048ACT000NA, RACBYB048AJT000NA, RACBYB060ACT000NA, RACBYB060AJT000NA
AE-107945-02H	Post - Rear Corner	1		RACBYB024AJT000NA, RACBYB030ACT000NA, RACBYB030AJT000NA, RACBYB036ACT000NA, RACBYB036AJT000NA, RACBYB042ACT000NA, RACBYB042AJT000NA
AS-107943-01H	Rear Panel Assembly	1		RACBYB048ACT000NA, RACBYB048AJT000NA, RACBYB060ACT000NA, RACBYB060AJT000NA
AS-107943-02H	Rear Panel Assembly	1		RACBYB024AJT000NA, RACBYB030ACT000NA, RACBYB030AJT000NA, RACBYB036ACT000NA, RACBYB036AJT000NA, RACBYB042ACT000NA, RACBYB042AJT000NA
AS-100820-01H	Right Panel	1		RACBYB024AJT000NA, RACBYB030ACT000NA, RACBYB030AJT000NA, RACBYB036ACT000NA, RACBYB036AJT000NA, RACBYB042ACT000NA, RACBYB042AJT000NA
63-20072-05	Screw	1		All models
63-22338-06	Screw	1		All models
63-22153-11	Screws - Sheet Metal. 8-18 x 3/4 in.	1		RACBYB048ACT000NA, RACBYB060ACT000NA

Part No.	Description	Qty	Replaced By	Fits Models
63-42112-03	Sheet Metal Screw w/Sealing Washer, 10-16 x 5/8 in.	3		All models
63-42109-06	Sheet Metal Screw, 10-16 x 1-1/4 in.	1		All models
63-22338-11	Sheet Metal Screw, 10-16 x 3/8 in.	1		All models
63-42109-01	Sheet Metal Screw, 10-16 x 3/8 in.	1		All models
63-42109-03	Sheet Metal Screw, 10-16 x 5/8 in.	1/2/8		All models
63-22153-05	Sheet Metal Screw, 8-18 x 3/8 in.	1		All models
45-17057-02	Snap-In Bushing - Conductor Protection	1	OBSOLETE	All models
45-17057-11	Snap-In Bushing - Conductor Protection	1		All models
45-18515-01	Snap-In Bushing - Conductor Protection	1		All models
63-22429-01	Stainless Steel Sheet Metal Screw, 8-18 x 1/2 in.	1/2		All models
68-23618-81	Stripping - 40 ft. Roll	1		All models
63-100404-06	Thread-Forming Screw (black), 10-32 x 7/16 in.	1		All models
63-22487-01	Thread-Forming Screw, 10-32 x 1/2 in.	1		All models
63-100404-02	Thread-Forming Screw, 12-24 x 7/16 in.	1		All models
AS-107950-01H	Top Panel - Indoor	1		All models
AS-107948-01H	Top Panel - Outdoor	1		All models
AE-107960-01	Transition - Top	1		All models
68-104464-10	Venturi	1		All models
64-17606-04	Wire & Cable Tie - Nylon Black - 11-1/2 in.	1		All models
64-101354-01	Wire Clip - Snap In	1		All models
95-105939-02	Wire Grille	1		All models