Rheem RCFY Evaporator Coil Replacement Parts List

Parts list RP-RHM-RCFY | Updated Nov 2026 | 121 parts | 89 model numbers

Genuine Rheem OEM part numbers for the models listed below, compiled from Rheem Manufacturing's service parts catalog. Quantities are per unit. Where Rheem has replaced a part number, the current number is shown under Replaced By. Always confirm the full model and serial number of the unit before ordering.

Models covered

RCFY2414STAAMC, RCFY2414STAAMCL, RCFY2414STAAVU, RCFY2417MTANMC, RCFY2417MTANMCL, RCFY2417MTANVU, RCFY2417SEANMC, RCFY2417SEANMCL, RCFY2417SEANVU, RCFY2417STANMC, RCFY2417STANMCL, RCFY2417STANVU, RCFY2421HEAAMC, RCFY2421HEAAMCL, RCFY2421HEAAVU, RCFY2421HEANMC, RCFY2421HEANMCL, RCFY2421HEANVU, RCFY2421HTANMC, RCFY2421HTANMCL, RCFY2421HTANVU, RCFY2421MEANMC, RCFY2421MEANVU, RCFY2421MTANMC, RCFY2421MTANMCL, RCFY2421MTANVU, RCFY3617STANMC, RCFY3617STANMCL, RCFY3617STANVU, RCFY3621HTAAMC, RCFY3621HTAAMCL, RCFY3621HTAAVU, RCFY3621MEAAMC, RCFY3621MEAAMCL, RCFY3621MEAAVU, RCFY3621MEANMC, RCFY3621MEANMCL, RCFY3621MEANVU, RCFY3621MTAAMC, RCFY3621MTAAMCL, RCFY3621MTAAVU, RCFY3621MTANMC, RCFY3621MTANMCL, RCFY3621MTANVU, RCFY3621STANMC, RCFY3621STANMCL, RCFY3621STANVU, RCFY3624MTANMC, RCFY3624MTANMCL, RCFY3624MTANVU, RCFY4221HTAAMC, RCFY4221HTAAMCL, RCFY4221HTAAVU, RCFY4221STAAMC, RCFY4221STAAMCL, RCFY4221STAAVU, RCFY4821HTAAMC, RCFY4821HTAAMCL, RCFY4821HTAAVU, RCFY4821SEAAMC, RCFY4821SEAAMCL, RCFY4821SEAAVU, RCFY4821STAAMC, RCFY4821STAAMCL, RCFY4821STAAVU, RCFY4821STANMC, RCFY4821STANMCL, RCFY4821STANVU, RCFY4824MTANMC, RCFY4824MTANMCL, RCFY4824MTANVU, RCFY4824STANMC, RCFY4824STANMCL, RCFY4824STANVU, RCFY6021SEAAMC, RCFY6021SEAAMCL, RCFY6021SEAAVU, RCFY6021STAAMC, RCFY6021STAAMCL, RCFY6021STAAVU, RCFY6024HTANMC, RCFY6024HTANMCL, RCFY6024HTANVU, RCFY6024SEANMC, RCFY6024SEANMCL, RCFY6024SEANVU, RCFY6024STANMC, RCFY6024STANMCL, RCFY6024STANVU

RCFY parts breakdown: N-Coil-TXV

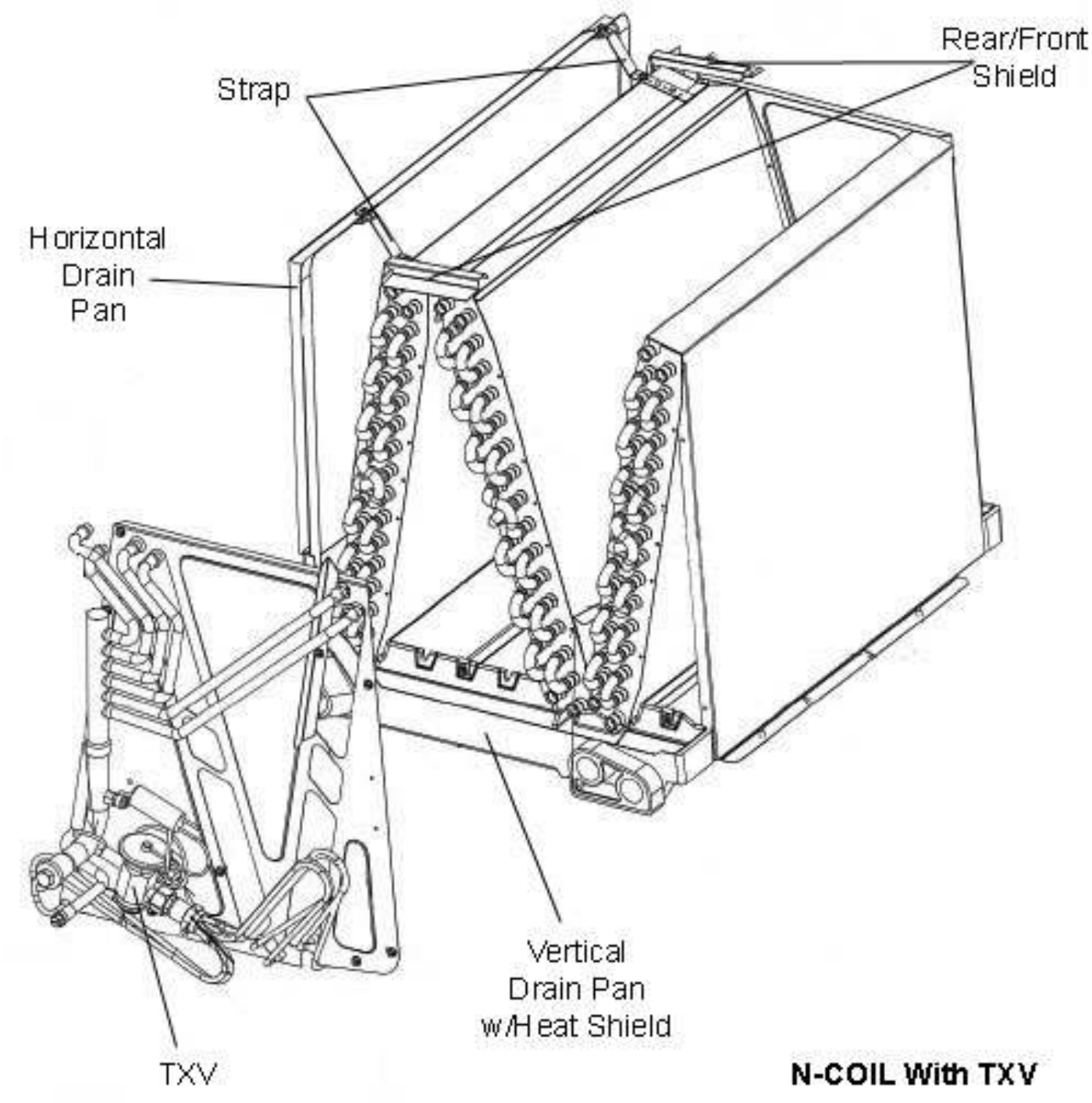

RCFY parts breakdown: A-Coil-TXV

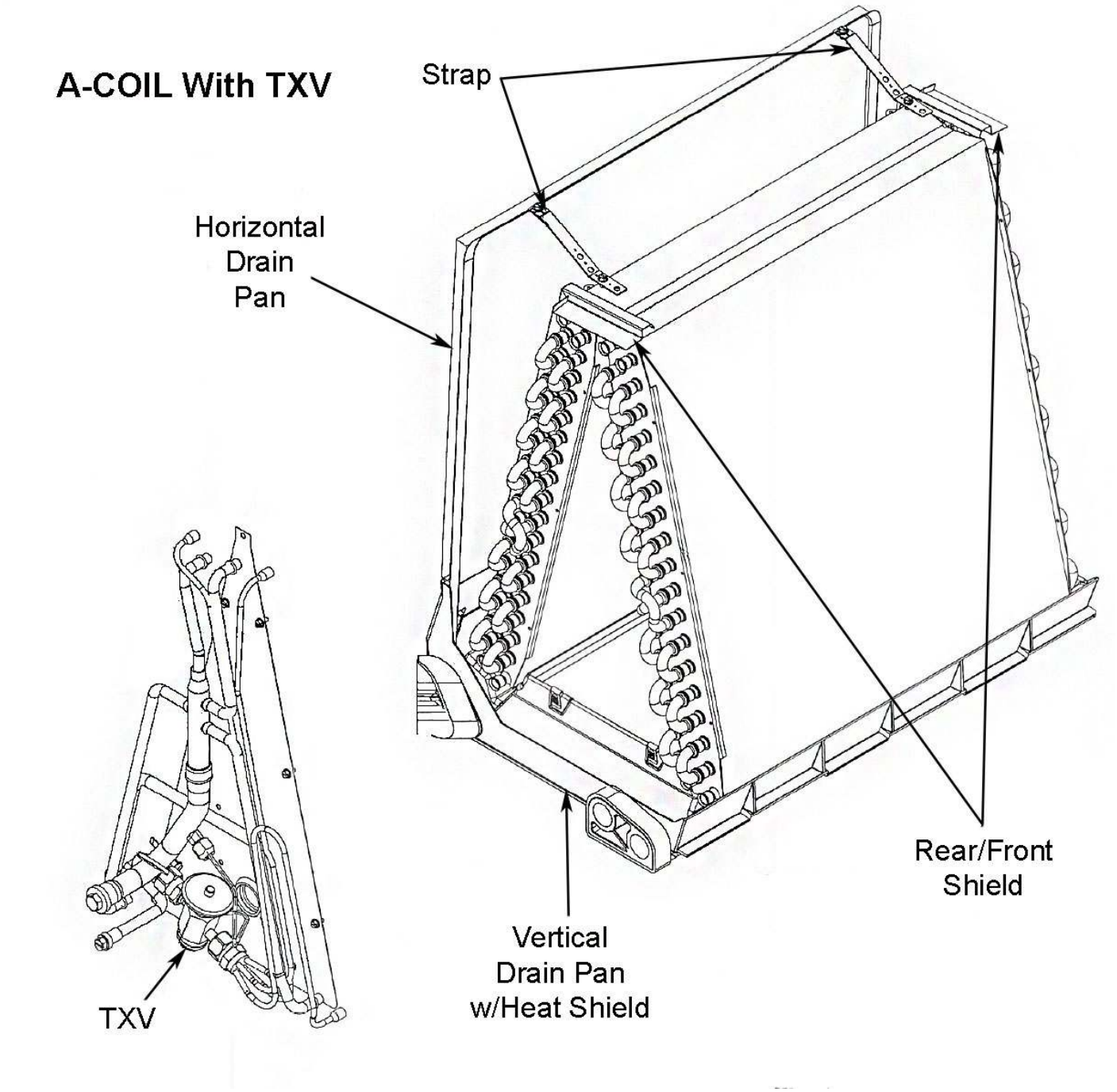

RCFY parts breakdown: N-Coil-EEV

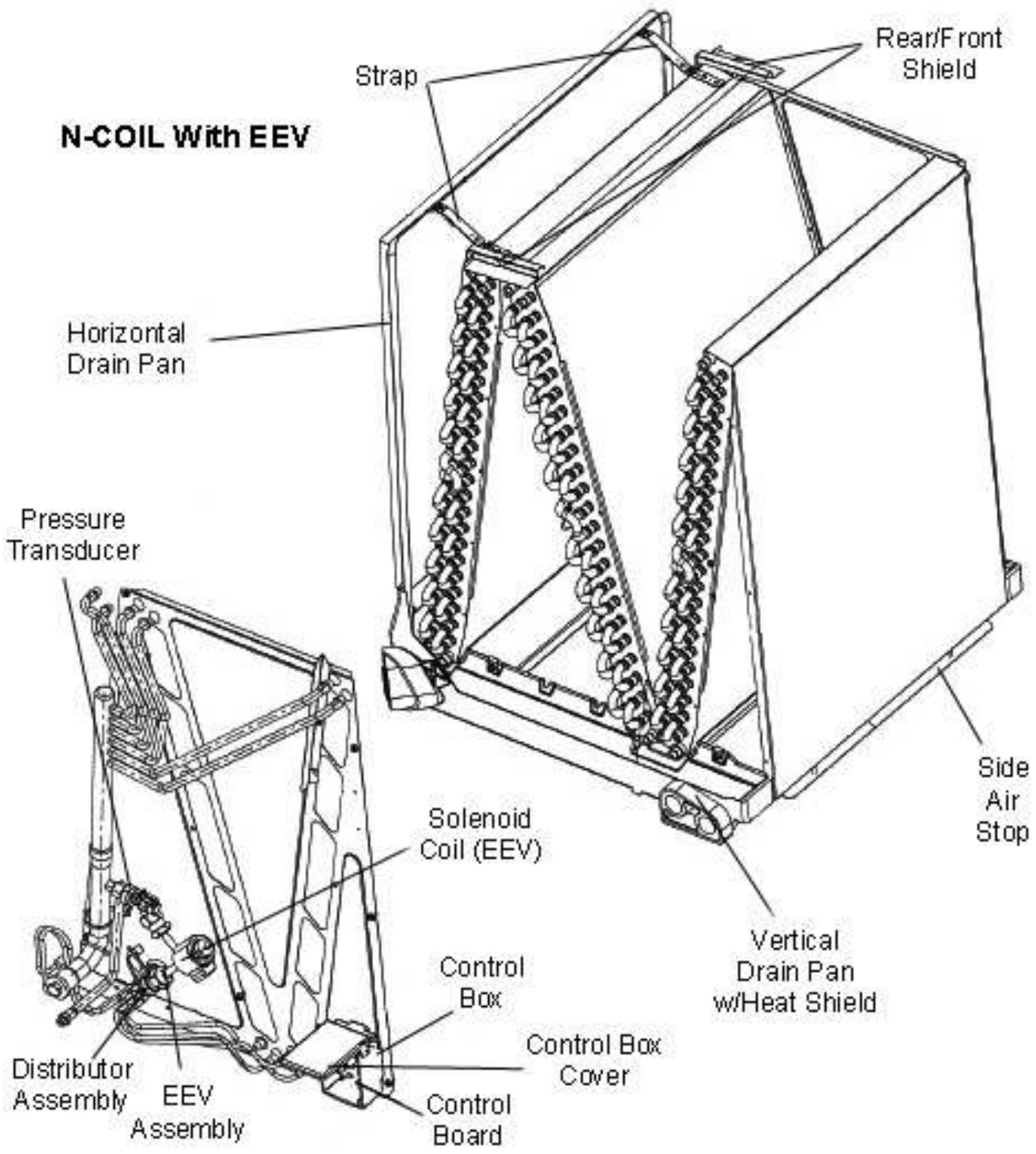

RCFY parts breakdown: A-Coil-EEV

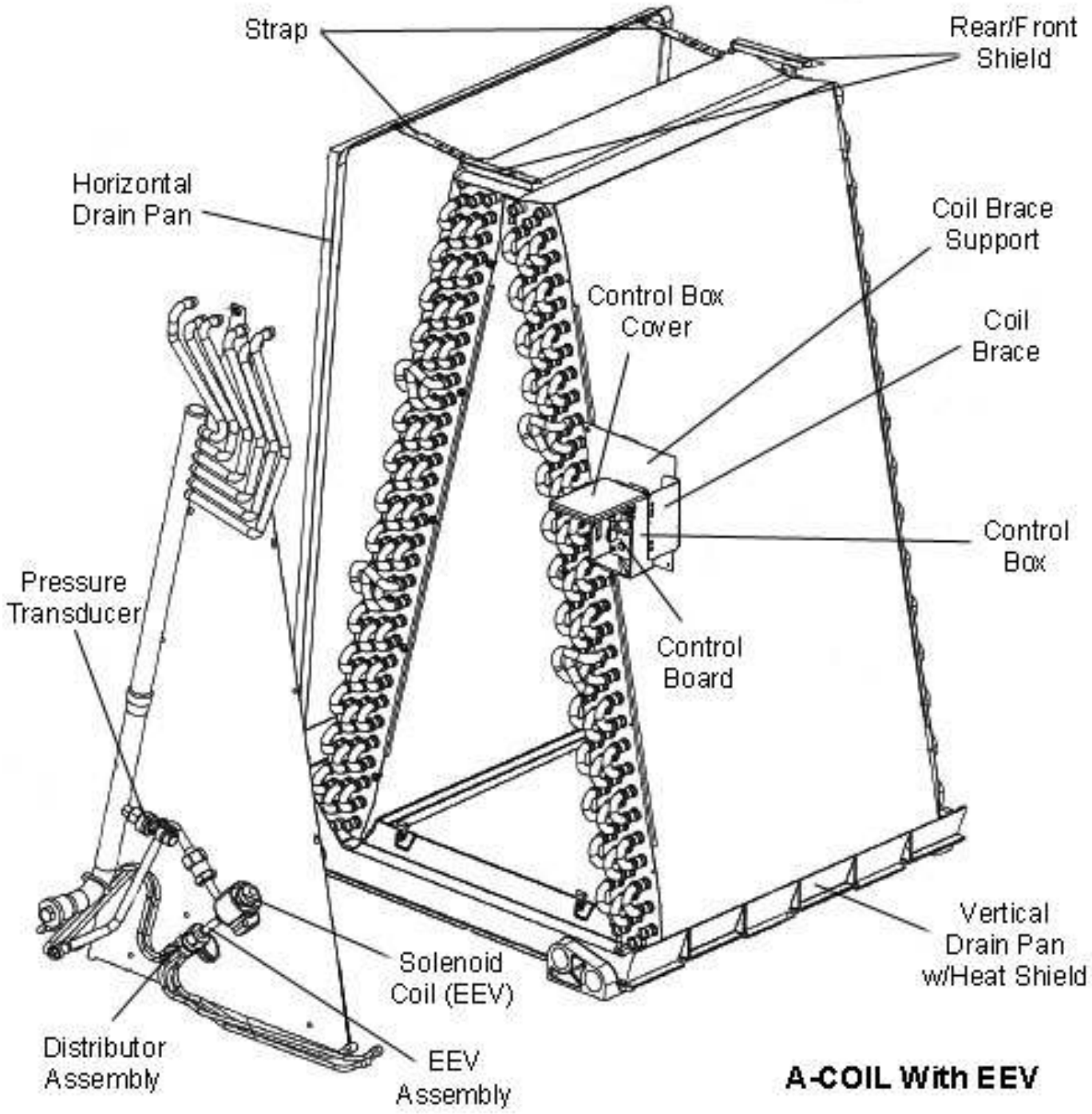

RCFY parts breakdown: Coil Case

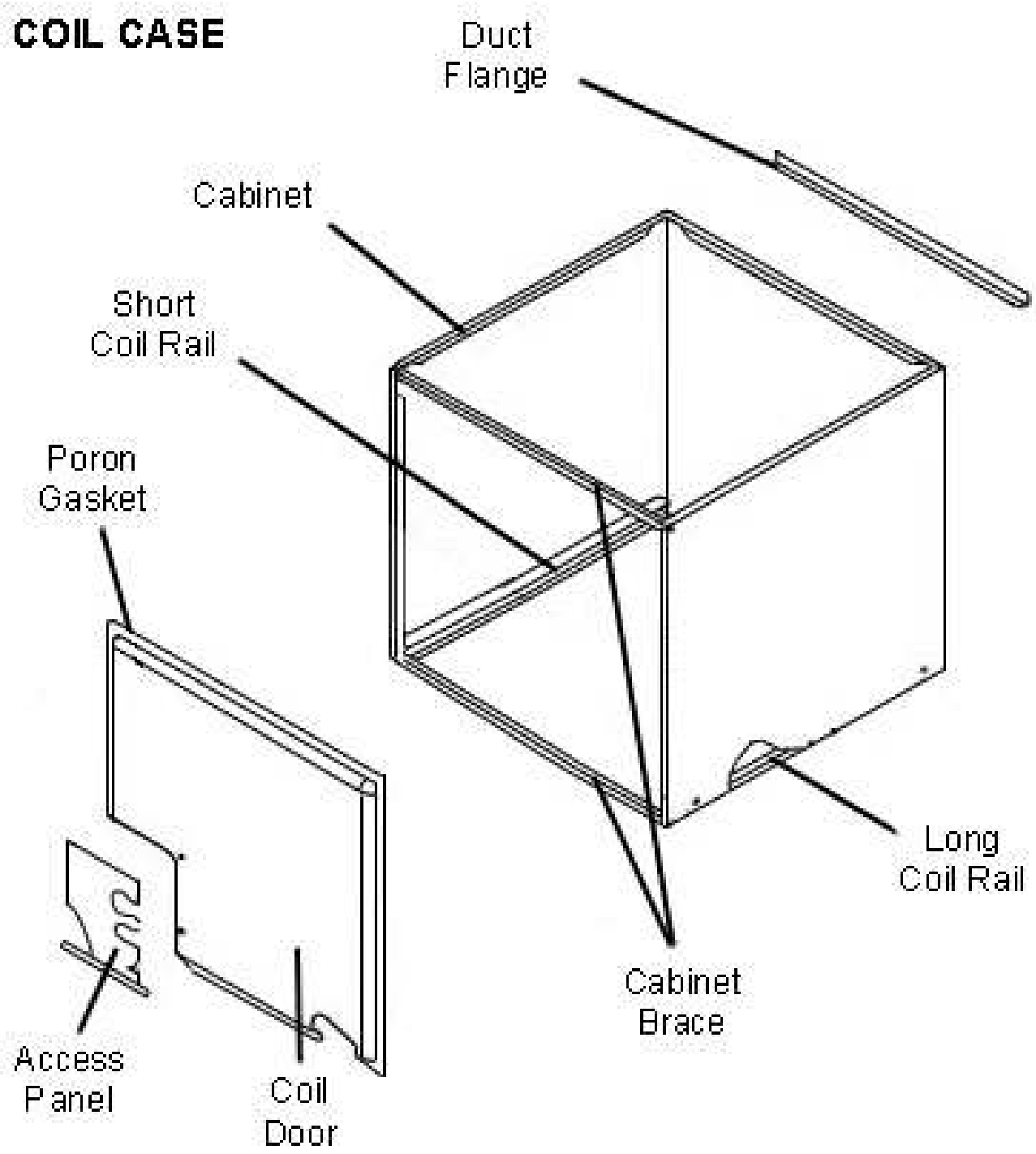

Electrical

Part No.	Description	Qty	Replaced By	Fits Models
42-109850-01	Blower Relay	1		RCFY2414STAAMC, RCFY2417MTANMC, RCFY2417SEANMC, RCFY2417STANMC, RCFY2421HEAAMC, RCFY2421HEANMC, RCFY2421HTANMC, RCFY2421MEANMC, RCFY2421MTANMC, RCFY3617STANMC, RCFY3621HTAAMC, RCFY3621MEAAMC, RCFY3621MEANMC, RCFY3621MTAAMC, RCFY3621MTANMC, RCFY3621STANMC, RCFY3624MTANMC, RCFY4221HTAAMC, RCFY4221STAAMC, RCFY4821HTAAMC, RCFY4821SEAAMC, RCFY4821STAAMC, RCFY4821STANMC, RCFY4824MTANMC, RCFY4824STANMC, RCFY6021SEAAMC, RCFY6021STAAMC, RCFY6024HTANMC, RCFY6024SEANMC, RCFY6024STANMC
45-109886-01	Blower Wire Extension A2L	1		RCFY2414STAAMC, RCFY2417MTANMC, RCFY2417STANMC, RCFY2421HTANMC, RCFY2421MTANMC, RCFY3617STANMC, RCFY3621HTAAMC, RCFY3621MTAAMC, RCFY3621MTANMC, RCFY3621STANMC, RCFY3624MTANMC, RCFY4221HTAAMC, RCFY4221STAAMC, RCFY4821HTAAMC, RCFY4821STAAMC, RCFY4821STANMC, RCFY4824MTANMC, RCFY4824STANMC, RCFY6021STAAMC, RCFY6024HTANMC, RCFY6024STANMC
45-109519-01	Plug Housing Assembly A2L RDS Cased Coil	1		RCFY2414STAAMC, RCFY2417MTANMC, RCFY2417SEANMC, RCFY2417STANMC, RCFY2421HEAAMC, RCFY2421HEANMC, RCFY2421HTANMC, RCFY2421MEANMC, RCFY2421MTANMC, RCFY3617STANMC, RCFY3621HTAAMC, RCFY3621MEAAMC, RCFY3621MEANMC, RCFY3621MTAAMC, RCFY3621MTANMC, RCFY3621STANMC, RCFY3624MTANMC, RCFY4221HTAAMC, RCFY4221STAAMC, RCFY4821HTAAMC, RCFY4821SEAAMC, RCFY4821STAAMC, RCFY4821STANMC, RCFY4824MTANMC, RCFY4824STANMC, RCFY6021SEAAMC, RCFY6021STAAMC, RCFY6024HTANMC, RCFY6024SEANMC, RCFY6024STANMC
47-103454-05	Pressure Transducer - Suction (SPT)	1		RCFY2417SEANMC, RCFY2417SEANMCL, RCFY2417SEANVU, RCFY2421HEAAMC, RCFY2421HEAAMCL, RCFY2421HEAAVU, RCFY2421HEANMC, RCFY2421HEANMCL, RCFY2421HEANVU, RCFY2421MEANMC, RCFY2421MEANVU, RCFY3621MEAAMC, RCFY3621MEAAMCL, RCFY3621MEAAVU, RCFY3621MEANMC, RCFY3621MEANMCL, RCFY3621MEANVU, RCFY4821SEAAMC, RCFY4821SEAAMCL, RCFY4821SEAAVU, RCFY6021SEAAMC, RCFY6021SEAAMCL, RCFY6021SEAAVU, RCFY6024SEANMC, RCFY6024SEANMCL, RCFY6024SEANVU
47-109708-01	Sensor A2L (Cubic)	1		RCFY2421HEAAMC, RCFY2421HEANMC, RCFY2421HTANMC, RCFY2421MEANMC, RCFY2421MTANMC, RCFY3621HTAAMC, RCFY3621MEAAMC, RCFY3621MEANMC, RCFY3621MTAAMC, RCFY3621MTANMC, RCFY3621STANMC, RCFY3624MTANMC, RCFY4221HTAAMC, RCFY4221STAAMC, RCFY4821HTAAMC, RCFY4821SEAAMC, RCFY4821STAAMC, RCFY4821STANMC, RCFY4824MTANMC, RCFY4824STANMC, RCFY6021SEAAMC, RCFY6021STAAMC, RCFY6024HTANMC, RCFY6024SEANMC, RCFY6024STANMC
47-109642-01	Sensor A2L (Sensirion)	1		RCFY2414STAAMC, RCFY2417MTANMC, RCFY2417SEANMC, RCFY2417STANMC, RCFY3617STANMC

Part No.	Description	Qty	Replaced By	Fits Models
47-109144-01	Sensor/Clip Assembly	1		RCFY2417SEANMC, RCFY2417SEANMCL, RCFY2421HEAAMC, RCFY2421HEAAMCL, RCFY2421HEANMC, RCFY2421HEANMCL, RCFY2421MEANMC, RCFY3621MEAAMC, RCFY3621MEAAMCL, RCFY3621MEANMC, RCFY3621MEANMCL, RCFY4821SEAAMC, RCFY4821SEAAMCL, RCFY6021SEAAMC, RCFY6021SEAAMCL, RCFY6024SEANMC, RCFY6024SEANMCL
45-50205-35-AJ-YTS	Wire Assembly	1		RCFY2414STAAMC, RCFY2417MTANMC, RCFY2417SEANMC, RCFY2417STANMC, RCFY2421HEAAMC, RCFY2421HEANMC, RCFY2421HTANMC, RCFY2421MEANMC, RCFY2421MTANMC, RCFY3617STANMC, RCFY3621HTAAMC, RCFY3621MEAAMC, RCFY3621MEANMC, RCFY3621MTAAMC, RCFY3621MTANMC, RCFY3621STANMC, RCFY3624MTANMC, RCFY4221HTAAMC, RCFY4221STAAMC, RCFY4821HTAAMC, RCFY4821SEAAMC, RCFY4821STAAMC, RCFY4821STANMC, RCFY4824MTANMC, RCFY4824STANMC, RCFY6021SEAAMC, RCFY6021STAAMC, RCFY6024HTANMC, RCFY6024SEANMC, RCFY6024STANMC
45-52880-35-AJ-YID	Wire Assembly	1		RCFY2414STAAMC, RCFY2417MTANMC, RCFY2417SEANMC, RCFY2417STANMC, RCFY2421HEAAMC, RCFY2421HEANMC, RCFY2421HTANMC, RCFY2421MEANMC, RCFY2421MTANMC, RCFY3617STANMC, RCFY3621HTAAMC, RCFY3621MEAAMC, RCFY3621MEANMC, RCFY3621MTAAMC, RCFY3621MTANMC, RCFY3621STANMC, RCFY3624MTANMC, RCFY4221HTAAMC, RCFY4221STAAMC, RCFY4821HTAAMC, RCFY4821SEAAMC, RCFY4821STAAMC, RCFY4821STANMC, RCFY4824MTANMC, RCFY4824STANMC, RCFY6021SEAAMC, RCFY6021STAAMC, RCFY6024HTANMC, RCFY6024SEANMC, RCFY6024STANMC
45-104130-03	Wire Harness - Pressure Transducer, Suction	1		RCFY2417SEANMC, RCFY2417SEANMCL, RCFY2421HEAAMC, RCFY2421HEAAMCL, RCFY2421HEANMC, RCFY2421HEANMCL, RCFY2421MEANMC, RCFY3621MEAAMC, RCFY3621MEAAMCL, RCFY3621MEANMC, RCFY3621MEANMCL, RCFY4821SEAAMC, RCFY4821SEAAMCL, RCFY6021SEAAMC, RCFY6021SEAAMCL, RCFY6024SEANMC, RCFY6024SEANMCL

Valves & switches

Part No.	Description	Qty	Replaced By	Fits Models
61-18551-01	Valve Core	1		RCFY2417SEANMC, RCFY2417SEANMCL, RCFY2417SEANVU, RCFY2421HEAAMC, RCFY2421HEAAMCL, RCFY2421HEAAVU, RCFY2421HEANMC, RCFY2421HEANMCL, RCFY2421HEANVU, RCFY2421MEANMC, RCFY2421MEANVU, RCFY3621MEAAMC, RCFY3621MEAAMCL, RCFY3621MEAAVU, RCFY3621MEANMC, RCFY3621MEANMCL, RCFY3621MEANVU, RCFY4821SEAAMC, RCFY4821SEAAMCL, RCFY4821SEAAVU, RCFY6021SEAAMC, RCFY6021SEAAMCL, RCFY6021SEAAVU, RCFY6024SEANMC, RCFY6024SEANMCL, RCFY6024SEANVU

Coil & refrigeration

Part No.	Description	Qty	Replaced By	Fits Models
83-104030-05	Distributor Assembly	1		RCFY6024SEANVU

Part No.	Description	Qty	Replaced By	Fits Models
61-103151-14	EEV (Electronic Expansion Valve) - Coil	1		RCFY2417SEANMC, RCFY2417SEANMCL, RCFY2417SEANVU, RCFY2421HEAAMC, RCFY2421HEAAMCL, RCFY2421HEAAVU, RCFY2421HEANMC, RCFY2421HEANMCL, RCFY2421HEANVU, RCFY2421MEANMC, RCFY2421MEANVU, RCFY3621MEAAMC, RCFY3621MEAAMCL, RCFY3621MEAAVU, RCFY3621MEANMC, RCFY3621MEANMCL, RCFY3621MEANVU, RCFY4821SEAAMC, RCFY4821SEAAMCL, RCFY4821SEAAVU, RCFY6021SEAAMC, RCFY6021SEAAMCL, RCFY6021SEAAVU, RCFY6024SEANMC, RCFY6024SEANMCL, RCFY6024SEANVU
61-109537-02V	Expansion Valve (TXV) - Valve Only	1		RCFY2417MTANMC, RCFY2417MTANMCL, RCFY2417MTANVU, RCFY2417STANVU, RCFY2421MTANMC, RCFY2421MTANMCL, RCFY2421MTANVU
61-109537-04V	Expansion Valve (TXV) - Valve Only	1		RCFY3617STANVU, RCFY3621MTANVU, RCFY3621STANVU, RCFY3624MTANMC, RCFY3624MTANMCL, RCFY3624MTANVU
61-109537-06V	Expansion Valve (TXV) - Valve Only	1		RCFY4821STANVU, RCFY4824MTANMC, RCFY4824MTANMCL, RCFY4824MTANVU, RCFY4824STANMC, RCFY4824STANMCL, RCFY4824STANVU
61-109537-07V	Expansion Valve (TXV) - Valve Only	1		RCFY6024HTANMC, RCFY6024HTANMCL, RCFY6024HTANVU, RCFY6024STANMC, RCFY6024STANMCL, RCFY6024STANVU
61-109537-14V	Expansion Valve (TXV) - Valve Only	1		RCFY6021STAAMC, RCFY6021STAAMCL, RCFY6021STAAVU
61-109537-20V	Expansion Valve (TXV) - Valve Only	1		RCFY2421HTANMC, RCFY2421HTANMCL, RCFY2421HTANVU
61-109537-21V	Expansion Valve (TXV) - Valve Only	1		RCFY3621HTAAMC, RCFY3621HTAAMCL, RCFY3621HTAAVU, RCFY3621MTAAMC, RCFY3621MTAAMCL, RCFY3621MTAAVU
61-109633-02	Expansion Valve (TXV) Assembly w/Distributor & Liquid Line	1		RCFY2417STANMC, RCFY2417STANMCL
61-109633-04	Expansion Valve (TXV) Assembly w/Distributor & Liquid Line	1		RCFY3617STANMC, RCFY3617STANMCL, RCFY3621MTANMC, RCFY3621MTANMCL, RCFY3621STANMC, RCFY3621STANMCL
61-109633-06	Expansion Valve (TXV) Assembly w/Distributor & Liquid Line	1		RCFY4821STANMC, RCFY4821STANMCL
64-21106-02	TXV Bulb Strap Mounting Kit	1		RCFY2414STAAMC, RCFY2414STAAMCL, RCFY2414STAAVU, RCFY2417MTANMC, RCFY2417MTANMCL, RCFY2417MTANVU, RCFY2417STANMC, RCFY2417STANMCL, RCFY2417STANVU, RCFY2421HTANMC, RCFY2421HTANMCL, RCFY2421HTANVU, RCFY2421MTANMC, RCFY2421MTANMCL, RCFY2421MTANVU, RCFY3617STANMC, RCFY3617STANMCL, RCFY3617STANVU, RCFY3621HTAAMC, RCFY3621HTAAMCL, RCFY3621HTAAVU, RCFY3621MTAAMC, RCFY3621MTAAMCL, RCFY3621MTAAVU, RCFY3621MTANMC, RCFY3621MTANMCL, RCFY3621MTANVU, RCFY3621STANMC, RCFY3621STANMCL, RCFY3621STANVU, RCFY3624MTANMC, RCFY3624MTANMCL, RCFY3624MTANVU, RCFY4221HTAAMC, RCFY4221HTAAMCL, RCFY4221HTAAVU, RCFY4221STAAMC, RCFY4221STAAMCL, RCFY4221STAAVU, RCFY4821HTAAMC, RCFY4821HTAAMCL, RCFY4821HTAAVU, RCFY4821STAAMC, RCFY4821STAAMCL, RCFY4821STAAVU, RCFY4821STANMC, RCFY4821STANMCL, RCFY4821STANVU, RCFY4824MTANMC, RCFY4824MTANMCL, RCFY4824MTANVU, RCFY4824STANMC, RCFY4824STANMCL, RCFY4824STANVU, RCFY6021STAAMC, RCFY6021STAAMCL, RCFY6021STAAVU, RCFY6024HTANMC, RCFY6024HTANMCL, RCFY6024HTANVU, RCFY6024STANMC, RCFY6024STANMCL, RCFY6024STANVU

Gas

Part No.	Description	Qty	Replaced By	Fits Models
10-109039-01	Heat Shield	1		RCFY2417MTANMC, RCFY2417MTANMCL, RCFY2417MTANVU, RCFY2417SEANMC, RCFY2417SEANMCL, RCFY2417SEANVU, RCFY2417STANMC, RCFY2417STANMCL, RCFY2417STANVU, RCFY3617STANMC, RCFY3617STANMCL, RCFY3617STANVU
10-109039-02	Heat Shield	1		RCFY2421HEANMC, RCFY2421HEANMCL, RCFY2421HEANVU, RCFY2421HTANMC, RCFY2421HTANMCL, RCFY2421HTANVU, RCFY2421MEANMC, RCFY2421MEANVU, RCFY2421MTANMC, RCFY2421MTANMCL, RCFY2421MTANVU, RCFY3621MEANMC, RCFY3621MEANMCL, RCFY3621MEANVU, RCFY3621MTANMC, RCFY3621MTANMCL, RCFY3621MTANVU, RCFY3621STANMC, RCFY3621STANMCL, RCFY3621STANVU, RCFY4821STANMC, RCFY4821STANMCL, RCFY4821STANVU
10-109039-03	Heat Shield	1		RCFY3624MTANMC, RCFY3624MTANMCL, RCFY3624MTANVU, RCFY4824MTANMC, RCFY4824MTANMCL, RCFY4824MTANVU, RCFY4824STANMC, RCFY4824STANMCL, RCFY4824STANVU, RCFY6024HTANMC, RCFY6024HTANMCL, RCFY6024HTANVU, RCFY6024SEANMC, RCFY6024SEANMCL, RCFY6024SEANVU, RCFY6024STANMC, RCFY6024STANMCL, RCFY6024STANVU
10-109039-06	Heat Shield	1		RCFY2414STAAMC, RCFY2414STAAMCL, RCFY2414STAAVU
10-109039-07	Heat Shield	1		RCFY2421HEAAMC, RCFY2421HEAAMCL, RCFY2421HEAAVU, RCFY3621HTAAMC, RCFY3621HTAAMCL, RCFY3621HTAAVU, RCFY3621MEAAMC, RCFY3621MEAAMCL, RCFY3621MEAAVU, RCFY3621MTAAMC, RCFY3621MTAAMCL, RCFY3621MTAAVU, RCFY4221HTAAMC, RCFY4221HTAAMCL, RCFY4221HTAAVU, RCFY4221STAAMC, RCFY4221STAAMCL, RCFY4221STAAVU, RCFY4821HTAAMC, RCFY4821HTAAMCL, RCFY4821HTAAVU, RCFY4821SEAAMC, RCFY4821SEAAMCL, RCFY4821SEAAVU, RCFY4821STAAMC, RCFY4821STAAMCL, RCFY4821STAAVU, RCFY6021SEAAMC, RCFY6021SEAAMCL, RCFY6021SEAAVU, RCFY6021STAAMC, RCFY6021STAAMCL, RCFY6021STAAVU

Cabinet & hardware

Part No.	Description	Qty	Replaced By	Fits Models
AE-101132-31	Access Panel	1		RCFY2414STAAMC, RCFY2414STAAMCL, RCFY2417MTANMC, RCFY2417MTANMCL, RCFY2417SEANMC, RCFY2417SEANMCL, RCFY2417STANMC, RCFY2417STANMCL, RCFY2421HEAAMC, RCFY2421HEAAMCL, RCFY2421HEANMC, RCFY2421HEANMCL, RCFY2421HTANMC, RCFY2421HTANMCL, RCFY2421MEANMC, RCFY2421MTANMC, RCFY2421MTANMCL, RCFY3617STANMC, RCFY3617STANMCL, RCFY3621HTAAMC, RCFY3621HTAAMCL, RCFY3621MEAAMC, RCFY3621MEAAMCL, RCFY3621MEANMC, RCFY3621MEANMCL, RCFY3621MTAAMC, RCFY3621MTAAMCL, RCFY3621MTANMC, RCFY3621MTANMCL, RCFY3621STANMC, RCFY3621STANMCL, RCFY3624MTANMC, RCFY3624MTANMCL, RCFY4221HTAAMC, RCFY4221HTAAMCL, RCFY4221STAAMC, RCFY4221STAAMCL, RCFY4821HTAAMC, RCFY4821HTAAMCL, RCFY4821SEAAMC, RCFY4821SEAAMCL, RCFY4821STAAMC, RCFY4821STAAMCL, RCFY4821STANMC, RCFY4821STANMCL, RCFY4824MTANMC, RCFY4824MTANMCL, RCFY4824STANMC, RCFY4824STANMCL, RCFY6021SEAAMC, RCFY6021SEAAMCL, RCFY6021STAAMC, RCFY6021STAAMCL, RCFY6024HTANMC, RCFY6024HTANMCL, RCFY6024SEANMC, RCFY6024SEANMCL, RCFY6024STANMC, RCFY6024STANMCL
AE-103988-02	Air Stop - Side	1		RCFY2417SEANMC, RCFY2417SEANMCL, RCFY2417SEANVU, RCFY2417STANMC, RCFY2417STANMCL, RCFY2417STANVU
AE-103988-03	Air Stop - Side	1		RCFY2417MTANMC, RCFY2417MTANMCL, RCFY2417MTANVU, RCFY3617STANMC, RCFY3617STANMCL, RCFY3617STANVU
AE-103988-04	Air Stop - Side	1		RCFY2421MEANMC, RCFY2421MEANVU, RCFY2421MTANMC, RCFY2421MTANMCL, RCFY2421MTANVU, RCFY3621STANMC, RCFY3621STANMCL, RCFY3621STANVU
AE-103988-06	Air Stop - Side	1		RCFY2421HEANMC, RCFY2421HEANMCL, RCFY2421HEANVU, RCFY2421HTANMC, RCFY2421HTANMCL, RCFY2421HTANVU, RCFY3621MEANMC, RCFY3621MEANMCL, RCFY3621MEANVU, RCFY3621MTANMC, RCFY3621MTANMCL, RCFY3621MTANVU, RCFY3624MTANMC, RCFY3624MTANMCL, RCFY3624MTANVU, RCFY4821STANMC, RCFY4821STANMCL, RCFY4821STANVU, RCFY4824STANMC, RCFY4824STANMCL, RCFY4824STANVU
AE-103988-07	Air Stop - Side	1		RCFY4824MTANMC, RCFY4824MTANMCL, RCFY4824MTANVU, RCFY6024HTANMC, RCFY6024HTANMCL, RCFY6024HTANVU, RCFY6024SEANMC, RCFY6024SEANMCL, RCFY6024SEANVU, RCFY6024STANMC, RCFY6024STANMCL, RCFY6024STANVU
10-101737-02	Brace - Coil Support	1		RCFY2421HEAAMC, RCFY2421HEAAMCL, RCFY3621HTAAMC, RCFY3621HTAAMCL, RCFY3621MEAAMC, RCFY3621MEAAMCL, RCFY3621MTAAMC, RCFY3621MTAAMCL, RCFY4221HTAAMC, RCFY4221HTAAMCL, RCFY4221STAAMC, RCFY4221STAAMCL, RCFY4821HTAAMC, RCFY4821HTAAMCL, RCFY4821SEAAMC, RCFY4821SEAAMCL, RCFY4821STAAMC, RCFY4821STAAMCL, RCFY6021SEAAMC, RCFY6021SEAAMCL, RCFY6021STAAMC, RCFY6021STAAMCL
AE-101134-02	Brace 17	1		RCFY2417MTANMC, RCFY2417MTANMCL, RCFY2417SEANMC, RCFY2417SEANMCL, RCFY2417STANMC, RCFY2417STANMCL, RCFY3617STANMC, RCFY3617STANMCL

Part No.	Description	Qty	Replaced By	Fits Models
AE-101134-03	Brace 21	1		RCFY2421HEAAMC, RCFY2421HEAAMCL, RCFY2421HEANMC, RCFY2421HEANMCL, RCFY2421HTANMC, RCFY2421HTANMCL, RCFY2421MEANMC, RCFY2421MTANMC, RCFY2421MTANMCL, RCFY3621HTAAMC, RCFY3621HTAAMCL, RCFY3621MEAAMC, RCFY3621MEAAMCL, RCFY3621MEANMC, RCFY3621MEANMCL, RCFY3621MTAAMC, RCFY3621MTAAMCL, RCFY3621MTANMC, RCFY3621MTANMCL, RCFY3621STANMC, RCFY3621STANMCL, RCFY4221HTAAMC, RCFY4221HTAAMCL, RCFY4221STAAMC, RCFY4221STAAMCL, RCFY4821HTAAMC, RCFY4821HTAAMCL, RCFY4821SEAAMC, RCFY4821SEAAMCL, RCFY4821STAAMC, RCFY4821STAAMCL, RCFY4821STANMC, RCFY4821STANMCL, RCFY6021SEAAMC, RCFY6021SEAAMCL, RCFY6021STAAMC, RCFY6021STAAMCL
AE-101134-04	Brace 24	1		RCFY3624MTANMC, RCFY3624MTANMCL, RCFY4824MTANMC, RCFY4824MTANMCL, RCFY4824STANMC, RCFY4824STANMCL, RCFY6024HTANMC, RCFY6024HTANMCL, RCFY6024SEANMC, RCFY6024SEANMCL, RCFY6024STANMC, RCFY6024STANMCL
AE-109597-01	Bracket - A2L Sensor	1		RCFY2414STAAMC, RCFY2417MTANMC, RCFY2417SEANMC, RCFY2417STANMC, RCFY2421HEAAMC, RCFY2421HEANMC, RCFY2421HTANMC, RCFY2421MEANMC, RCFY2421MTANMC, RCFY3617STANMC, RCFY3621HTAAMC, RCFY3621MEAAMC, RCFY3621MEANMC, RCFY3621MTAAMC, RCFY3621MTANMC, RCFY3621STANMC, RCFY3624MTANMC, RCFY4221HTAAMC, RCFY4221STAAMC, RCFY4821HTAAMC, RCFY4821SEAAMC, RCFY4821STAAMC, RCFY4821STANMC, RCFY4824MTANMC, RCFY4824STANMC, RCFY6021SEAAMC, RCFY6021STAAMC, RCFY6024HTANMC, RCFY6024SEANMC, RCFY6024STANMC
AE-110038-01	Bracket - A2L Sensor Standoff	1		RCFY2414STAAMC, RCFY2417MTANMC, RCFY2417STANMC, RCFY3617STANMC
45-17055-07	Bushing - Strain Relief	1	OBSOLETE	RCFY2414STAAMC, RCFY2417SEANMC, RCFY2417SEANMCL, RCFY2421HEAAMC, RCFY2421HEAAMCL, RCFY2421HEANMC, RCFY2421HEANMCL, RCFY2421HTANMC, RCFY2421MEANMC, RCFY3621HTAAMC, RCFY3621MEAAMC, RCFY3621MEAAMCL, RCFY3621MEANMC, RCFY3621MEANMCL, RCFY3621MTAAMC, RCFY4221HTAAMC, RCFY4221STAAMC, RCFY4821HTAAMC, RCFY4821SEAAMC, RCFY4821SEAAMCL, RCFY4821STAAMC, RCFY6021SEAAMC, RCFY6021SEAAMCL, RCFY6024HTANMC, RCFY6024SEANMC, RCFY6024SEANMCL
45-22980-10	Button Plug with Recessed Head	1		All models
AE-101126-31	Cabinet - Coil - 14 in.	1		RCFY2414STAAMC, RCFY2414STAAMCL
AE-101126-32	Cabinet - Coil - 17 in.	1		RCFY2417MTANMC, RCFY2417MTANMCL, RCFY2417SEANMC, RCFY2417SEANMCL, RCFY2417STANMC, RCFY2417STANMCL, RCFY3617STANMC, RCFY3617STANMCL
AE-101126-33	Cabinet - Coil - 21 in.	1		RCFY2421MEANMC, RCFY2421MTANMC, RCFY2421MTANMCL, RCFY3621STANMC, RCFY3621STANMCL
AE-101126-34	Cabinet - Coil - 21 in.	1		RCFY2421HEANMC, RCFY2421HEANMCL, RCFY2421HTANMC, RCFY2421HTANMCL, RCFY3621MEANMC, RCFY3621MEANMCL, RCFY3621MTANMC, RCFY3621MTANMCL, RCFY4821STANMC, RCFY4821STANMCL

Part No.	Description	Qty	Replaced By	Fits Models
AE-101126-39	Cabinet - Coil - 21 in.	1		RCFY2421HEAAMC, RCFY2421HEAAMCL, RCFY3621HTAAMC, RCFY3621HTAAMCL, RCFY3621MEAAMC, RCFY3621MEAAMCL, RCFY3621MTAAMC, RCFY3621MTAAMCL, RCFY4221HTAAMC, RCFY4221HTAAMCL, RCFY4221STAAMC, RCFY4221STAAMCL, RCFY4821HTAAMC, RCFY4821HTAAMCL, RCFY4821SEAAMC, RCFY4821SEAAMCL, RCFY4821STAAMC, RCFY4821STAAMCL, RCFY6021SEAAMC, RCFY6021SEAAMCL, RCFY6021STAAMC, RCFY6021STAAMCL
AE-101126-36	Cabinet - Coil - 24 in.	1		RCFY3624MTANMC, RCFY3624MTANMCL, RCFY4824MTANMC, RCFY4824MTANMCL, RCFY4824STANMC, RCFY4824STANMCL, RCFY6024HTANMC, RCFY6024HTANMCL, RCFY6024SEANMC, RCFY6024SEANMCL, RCFY6024STANMC, RCFY6024STANMCL
AE-101134-01	Cabinet Brace	1		RCFY2414STAAMC, RCFY2414STAAMCL
64-101148-09	Cable Tie - Double Loop	1		RCFY2414STAAMC, RCFY2414STAAMCL, RCFY2417MTANMC, RCFY2417MTANMCL, RCFY2417STANMC, RCFY2417STANMCL, RCFY2421HTANMC, RCFY2421HTANMCL, RCFY2421MTANMC, RCFY2421MTANMCL, RCFY3617STANMC, RCFY3617STANMCL, RCFY3621HTAAMC, RCFY3621HTAAMCL, RCFY3621MTAAMC, RCFY3621MTAAMCL, RCFY3621MTANMC, RCFY3621MTANMCL, RCFY3621STANMC, RCFY3621STANMCL, RCFY3624MTANMC, RCFY3624MTANMCL, RCFY4221HTAAMC, RCFY4221HTAAMCL, RCFY4221STAAMC, RCFY4221STAAMCL, RCFY4821HTAAMC, RCFY4821HTAAMCL, RCFY4821STAAMC, RCFY4821STAAMCL, RCFY4821STANMC, RCFY4821STANMCL, RCFY4824MTANMC, RCFY4824MTANMCL, RCFY4824STANMC, RCFY4824STANMCL, RCFY6021STAAMC, RCFY6021STAAMCL, RCFY6024HTANMC, RCFY6024HTANMCL, RCFY6024STANMC, RCFY6024STANMCL
82-105078-02	Chatleff Body (3/4 in. ID)	1		RCFY6024SEANVU
82-105078-03	Chatleff Fitting	1		RCFY6024SEANVU
82-105078-04	Chatleff Fitting	1		RCFY6024SEANVU
AE-101737-01	Coil Brace	1		RCFY2421HEAAMC, RCFY2421HEAAMCL, RCFY3621HTAAMC, RCFY3621HTAAMCL, RCFY3621MEAAMC, RCFY3621MEAAMCL, RCFY3621MTAAMC, RCFY3621MTAAMCL, RCFY4221HTAAMC, RCFY4221HTAAMCL, RCFY4221STAAMC, RCFY4221STAAMCL, RCFY4821HTAAMC, RCFY4821HTAAMCL, RCFY4821SEAAMC, RCFY4821SEAAMCL, RCFY4821STAAMC, RCFY4821STAAMCL, RCFY4824MTANMC, RCFY4824MTANMCL, RCFY4824MTANVU, RCFY6021SEAAMC, RCFY6021SEAAMCL, RCFY6021STAAMC, RCFY6021STAAMCL, RCFY6024HTANMC, RCFY6024HTANMCL, RCFY6024HTANVU, RCFY6024SEANMC, RCFY6024SEANMCL, RCFY6024SEANVU, RCFY6024STANMC, RCFY6024STANMCL, RCFY6024STANVU
AE-101707-38	Door - Coil	1		RCFY2421HEAAMC, RCFY2421HEAAMCL, RCFY3621HTAAMC, RCFY3621HTAAMCL, RCFY3621MEAAMC, RCFY3621MEAAMCL, RCFY3621MTAAMC, RCFY3621MTAAMCL, RCFY4221HTAAMC, RCFY4221HTAAMCL, RCFY4221STAAMC, RCFY4221STAAMCL, RCFY4821HTAAMC, RCFY4821HTAAMCL, RCFY4821SEAAMC, RCFY4821SEAAMCL, RCFY4821STAAMC, RCFY4821STAAMCL, RCFY6021SEAAMC, RCFY6021SEAAMCL, RCFY6021STAAMC, RCFY6021STAAMCL
AE-101707-31	Door - Coil - 14 in.	1		RCFY2414STAAMC, RCFY2414STAAMCL

Part No.	Description	Qty	Replaced By	Fits Models
AE-101707-32	Door - Coil - 17 in.	1		RCFY2417MTANMC, RCFY2417MTANMCL, RCFY2417SEANMC, RCFY2417SEANMCL, RCFY2417STANMC, RCFY2417STANMCL, RCFY3617STANMC, RCFY3617STANMCL
AE-101707-33	Door - Coil - 21 in.	1		RCFY2421MEANMC, RCFY2421MTANMC, RCFY2421MTANMCL, RCFY3621STANMC, RCFY3621STANMCL
AE-101707-34	Door - Coil - 21 in.	1		RCFY2421HEANMC, RCFY2421HEANMCL, RCFY2421HTANMC, RCFY2421HTANMCL, RCFY3621MEANMC, RCFY3621MEANMCL, RCFY3621MTANMC, RCFY3621MTANMCL, RCFY4821STANMC, RCFY4821STANMCL
AE-101707-36	Door - Coil - 24 in.	1		RCFY3624MTANMC, RCFY3624MTANMCL, RCFY4824MTANMC, RCFY4824MTANMCL, RCFY4824STANMC, RCFY4824STANMCL, RCFY6024HTANMC, RCFY6024HTANMCL, RCFY6024SEANMC, RCFY6024SEANMCL, RCFY6024STANMC, RCFY6024STANMCL
68-104835-03	Drain Pan - 21 in. Vertical	1		RCFY2421HEANMC, RCFY2421HEANMCL, RCFY2421HEANVU, RCFY2421HTANMC, RCFY2421HTANMCL, RCFY2421HTANVU, RCFY2421MEANMC, RCFY2421MEANVU, RCFY2421MTANMC, RCFY2421MTANMCL, RCFY2421MTANVU, RCFY3621MEANMC, RCFY3621MEANMCL, RCFY3621MEANVU, RCFY3621MTANMC, RCFY3621MTANMCL, RCFY3621MTANVU, RCFY3621STANMC, RCFY3621STANMCL, RCFY3621STANVU, RCFY4821STANMC, RCFY4821STANMCL, RCFY4821STANVU
AS-109040-01	Drain Pan - Heat Shield Kit	1		RCFY2417MTANMC, RCFY2417MTANMCL, RCFY2417MTANVU, RCFY2417SEANMC, RCFY2417SEANMCL, RCFY2417SEANVU, RCFY2417STANMC, RCFY2417STANMCL, RCFY2417STANVU, RCFY3617STANMC, RCFY3617STANMCL, RCFY3617STANVU
AS-109040-03	Drain Pan - Heat Shield Kit	1		RCFY3624MTANMC, RCFY3624MTANMCL, RCFY3624MTANVU, RCFY4824MTANMC, RCFY4824MTANMCL, RCFY4824MTANVU, RCFY4824STANMC, RCFY4824STANMCL, RCFY4824STANVU, RCFY6024HTANMC, RCFY6024HTANMCL, RCFY6024HTANVU, RCFY6024SEANMC, RCFY6024SEANMCL, RCFY6024SEANVU, RCFY6024STANMC, RCFY6024STANMCL, RCFY6024STANVU
AS-109040-05	Drain Pan - Heat Shield Kit	1		RCFY2414STAAMC, RCFY2414STAAMCL, RCFY2414STAAVU
AS-109040-06	Drain Pan - Heat Shield Kit	1		RCFY2421HEAAMC, RCFY2421HEAAMCL, RCFY2421HEAAVU, RCFY3621HTAAMC, RCFY3621HTAAMCL, RCFY3621HTAAVU, RCFY3621MEAAMC, RCFY3621MEAAMCL, RCFY3621MEAAVU, RCFY3621MTAAMC, RCFY3621MTAAMCL, RCFY3621MTAAVU, RCFY4221HTAAMC, RCFY4221HTAAMCL, RCFY4221HTAAVU, RCFY4221STAAMC, RCFY4221STAAMCL, RCFY4221STAAVU, RCFY4821HTAAMC, RCFY4821HTAAMCL, RCFY4821HTAAVU, RCFY4821SEAAMC, RCFY4821SEAAMCL, RCFY4821SEAAVU, RCFY4821STAAMC, RCFY4821STAAMCL, RCFY4821STAAVU, RCFY6021SEAAMC, RCFY6021SEAAMCL, RCFY6021SEAAVU, RCFY6021STAAMC, RCFY6021STAAMCL, RCFY6021STAAVU
AS-101128-31H	Drain Pan - Horizontal	1		RCFY2417MTANMC, RCFY2417MTANMCL, RCFY2421MEANMC, RCFY2421MTANMC, RCFY2421MTANMCL, RCFY3617STANMC, RCFY3617STANMCL, RCFY3621STANMC, RCFY3621STANMCL

Part No.	Description	Qty	Replaced By	Fits Models
AS-101128-32H	Drain Pan - Horizontal	1		RCFY2421HEANMC, RCFY2421HEANMCL, RCFY2421HTANMC, RCFY2421HTANMCL, RCFY3621MEANMC, RCFY3621MEANMCL, RCFY3621MTANMC, RCFY3621MTANMCL, RCFY3624MTANMC, RCFY3624MTANMCL, RCFY4821STANMC, RCFY4821STANMCL, RCFY4824STANMC, RCFY4824STANMCL
AS-101128-33H	Drain Pan - Horizontal	1		RCFY4824MTANMC, RCFY4824MTANMCL, RCFY6024HTANMC, RCFY6024HTANMCL, RCFY6024SEANMC, RCFY6024SEANMCL, RCFY6024STANMC, RCFY6024STANMCL
AS-101128-34H	Drain Pan - Horizontal	1		RCFY2417SEANMC, RCFY2417SEANMCL, RCFY2417STANMC, RCFY2417STANMCL
AS-101128-35H	Drain Pan - Horizontal	1		RCFY2414STAAMC, RCFY2414STAAMCL
AS-101128-36H	Drain Pan - Horizontal	1		RCFY2421HEAAMC, RCFY2421HEAAMCL, RCFY3621HTAAMC, RCFY3621HTAAMCL, RCFY3621MEAAMC, RCFY3621MEAAMCL, RCFY3621MTAAMC, RCFY3621MTAAMCL, RCFY4221HTAAMC, RCFY4221HTAAMCL, RCFY4221STAAMC, RCFY4221STAAMCL, RCFY4821HTAAMC, RCFY4821HTAAMCL, RCFY4821SEAAMC, RCFY4821SEAAMCL, RCFY4821STAAMC, RCFY4821STAAMCL, RCFY6021SEAAMC, RCFY6021SEAAMCL, RCFY6021STAAMC, RCFY6021STAAMCL
68-100070-01	Drain Plug (3/4 in. NPT)	1		All models
63-22159-01	Drill-Tip Sheet Metal Screw, 8-18 x 1/2 in.	1		RCFY2417SEANMC, RCFY2417SEANMCL, RCFY2421HEAAMC, RCFY2421HEAAMCL, RCFY2421HEANMC, RCFY2421HEANMCL, RCFY2421MEANMC, RCFY3621MEAAMC, RCFY3621MEAAMCL, RCFY3621MEANMC, RCFY3621MEANMCL, RCFY4821SEAAMC, RCFY4821SEAAMCL, RCFY6021SEAAMC, RCFY6021SEAAMCL, RCFY6024SEANMC, RCFY6024SEANMCL
AE-101048-08	Duct Flange - 23-3/8 in.	1		RCFY2414STAAMC, RCFY2414STAAMCL, RCFY2417MTANMC, RCFY2417MTANMCL, RCFY2417SEANMC, RCFY2417SEANMCL, RCFY2417STANMC, RCFY2417STANMCL, RCFY2421HEAAMC, RCFY2421HEAAMCL, RCFY2421HEANMC, RCFY2421HEANMCL, RCFY2421HTANMC, RCFY2421HTANMCL, RCFY2421MEANMC, RCFY2421MTANMC, RCFY2421MTANMCL, RCFY3617STANMC, RCFY3617STANMCL, RCFY3621HTAAMC, RCFY3621HTAAMCL, RCFY3621MEAAMC, RCFY3621MEAAMCL, RCFY3621MEANMC, RCFY3621MEANMCL, RCFY3621MTAAMC, RCFY3621MTAAMCL, RCFY3621MTANMC, RCFY3621MTANMCL, RCFY3621STANMC, RCFY3621STANMCL, RCFY3624MTANMC, RCFY3624MTANMCL, RCFY4221HTAAMC, RCFY4221HTAAMCL, RCFY4221STAAMC, RCFY4221STAAMCL, RCFY4821HTAAMC, RCFY4821HTAAMCL, RCFY4821SEAAMC, RCFY4821SEAAMCL, RCFY4821STAAMC, RCFY4821STAAMCL, RCFY4821STANMC, RCFY4821STANMCL, RCFY4824MTANMC, RCFY4824MTANMCL, RCFY4824STANMC, RCFY4824STANMCL, RCFY6021SEAAMC, RCFY6021SEAAMCL, RCFY6021STAAMC, RCFY6021STAAMCL, RCFY6024HTANMC, RCFY6024HTANMCL, RCFY6024SEANMC, RCFY6024SEANMCL, RCFY6024STANMC, RCFY6024STANMCL
AS-105287-01H	Front Coil Shield	1		RCFY2414STAAVU
AS-105287-06H	Front Coil Shield	1		RCFY3624MTANVU, RCFY4824STANVU

Part No.	Description	Qty	Replaced By	Fits Models
68-42246-83	Gasket - 16 ft. long x 1/16 in. thick x 1/2 in. wide	1		RCFY2414STAAMC, RCFY2414STAAMCL, RCFY2417MTANMC, RCFY2417MTANMCL, RCFY2417SEANMC, RCFY2417SEANMCL, RCFY2417STANMC, RCFY2417STANMCL, RCFY2421HEAAMC, RCFY2421HEAAMCL, RCFY2421HEANMC, RCFY2421HEANMCL, RCFY2421HTANMC, RCFY2421HTANMCL, RCFY2421MEANMC, RCFY2421MTANMC, RCFY2421MTANMCL, RCFY3617STANMC, RCFY3617STANMCL, RCFY3621HTAAMC, RCFY3621HTAAMCL, RCFY3621MEAAMC, RCFY3621MEAAMCL, RCFY3621MEANMC, RCFY3621MEANMCL, RCFY3621MTAAMC, RCFY3621MTAAMCL, RCFY3621MTANMC, RCFY3621MTANMCL, RCFY3621STANMC, RCFY3621STANMCL, RCFY3624MTANMC, RCFY3624MTANMCL, RCFY4221HTAAMC, RCFY4221HTAAMCL, RCFY4221STAAMC, RCFY4221STAAMCL, RCFY4821HTAAMC, RCFY4821HTAAMCL, RCFY4821SEAAMC, RCFY4821SEAAMCL, RCFY4821STAAMC, RCFY4821STAAMCL, RCFY4821STANMC, RCFY4821STANMCL, RCFY4824MTANMC, RCFY4824MTANMCL, RCFY4824STANMC, RCFY4824STANMCL, RCFY6021SEAAMC, RCFY6021SEAAMCL, RCFY6021STAAMC, RCFY6021STAAMCL, RCFY6024HTANMC, RCFY6024HTANMCL, RCFY6024SEANMC, RCFY6024SEANMCL, RCFY6024STANMC, RCFY6024STANMCL
68-23635-27	Insulation	1		All models
68-101644-02	Insulation - Access Door	1		RCFY2414STAAMC, RCFY2414STAAMCL, RCFY2417MTANMC, RCFY2417MTANMCL, RCFY2417SEANMC, RCFY2417SEANMCL, RCFY2417STANMC, RCFY2417STANMCL, RCFY2421HEAAMC, RCFY2421HEAAMCL, RCFY2421HEANMC, RCFY2421HEANMCL, RCFY2421HTANMC, RCFY2421HTANMCL, RCFY2421MEANMC, RCFY2421MTANMC, RCFY2421MTANMCL, RCFY3617STANMC, RCFY3617STANMCL, RCFY3621HTAAMC, RCFY3621HTAAMCL, RCFY3621MEAAMC, RCFY3621MEAAMCL, RCFY3621MEANMC, RCFY3621MEANMCL, RCFY3621MTAAMC, RCFY3621MTAAMCL, RCFY3621MTANMC, RCFY3621MTANMCL, RCFY3621STANMC, RCFY3621STANMCL, RCFY3624MTANMC, RCFY3624MTANMCL, RCFY4221HTAAMC, RCFY4221HTAAMCL, RCFY4221STAAMC, RCFY4221STAAMCL, RCFY4821HTAAMC, RCFY4821HTAAMCL, RCFY4821SEAAMC, RCFY4821SEAAMCL, RCFY4821STAAMC, RCFY4821STAAMCL, RCFY4821STANMC, RCFY4821STANMCL, RCFY4824MTANMC, RCFY4824MTANMCL, RCFY4824STANMC, RCFY4824STANMCL, RCFY6021SEAAMC, RCFY6021SEAAMCL, RCFY6021STAAMC, RCFY6021STAAMCL, RCFY6024HTANMC, RCFY6024HTANMCL, RCFY6024SEANMC, RCFY6024SEANMCL, RCFY6024STANMC, RCFY6024STANMCL

Part No.	Description	Qty	Replaced By	Fits Models
68-101975-01	Insulation - Black 1/4 in.	1		RCFY2414STAAMC, RCFY2414STAAMCL, RCFY2417MTANMC, RCFY2417MTANMCL, RCFY2417SEANMC, RCFY2417SEANMCL, RCFY2417STANMC, RCFY2417STANMCL, RCFY2421HEAAMC, RCFY2421HEAAMCL, RCFY2421HEANMC, RCFY2421HEANMCL, RCFY2421HTANMC, RCFY2421HTANMCL, RCFY2421MEANMC, RCFY2421MTANMC, RCFY2421MTANMCL, RCFY3617STANMC, RCFY3617STANMCL, RCFY3621HTAAMC, RCFY3621HTAAMCL, RCFY3621MEAAMC, RCFY3621MEAAMCL, RCFY3621MEANMC, RCFY3621MEANMCL, RCFY3621MTAAMC, RCFY3621MTAAMCL, RCFY3621MTANMC, RCFY3621MTANMCL, RCFY3621STANMC, RCFY3621STANMCL, RCFY3624MTANMC, RCFY3624MTANMCL, RCFY4221HTAAMC, RCFY4221HTAAMCL, RCFY4221STAAMC, RCFY4221STAAMCL, RCFY4821HTAAMC, RCFY4821HTAAMCL, RCFY4821SEAAMC, RCFY4821SEAAMCL, RCFY4821STAAMC, RCFY4821STAAMCL, RCFY4821STANMC, RCFY4821STANMCL, RCFY4824MTANMC, RCFY4824MTANMCL, RCFY4824STANMC, RCFY4824STANMCL, RCFY6021SEAAMC, RCFY6021SEAAMCL, RCFY6021STAAMC, RCFY6021STAAMCL, RCFY6024HTANMC, RCFY6024HTANMCL, RCFY6024SEANMC, RCFY6024SEANMCL, RCFY6024STANMC, RCFY6024STANMCL
68-101121-05	Insulation - Cabinet	1		RCFY2414STAAMC, RCFY2414STAAMCL
68-101121-06	Insulation - Cabinet	1		RCFY2417MTANMC, RCFY2417MTANMCL, RCFY2417SEANMC, RCFY2417SEANMCL, RCFY2417STANMC, RCFY2417STANMCL, RCFY3617STANMC, RCFY3617STANMCL
68-101121-07	Insulation - Cabinet	1		RCFY2421MEANMC, RCFY2421MTANMC, RCFY2421MTANMCL, RCFY3621STANMC, RCFY3621STANMCL
68-101121-08	Insulation - Cabinet	1		RCFY2421HEANMC, RCFY2421HEANMCL, RCFY2421HTANMC, RCFY2421HTANMCL, RCFY3621MEANMC, RCFY3621MEANMCL, RCFY3621MTANMC, RCFY3621MTANMCL, RCFY4821STANMC, RCFY4821STANMCL
68-101121-09	Insulation - Cabinet	1		RCFY3624MTANMC, RCFY3624MTANMCL, RCFY4824MTANMC, RCFY4824MTANMCL, RCFY4824STANMC, RCFY4824STANMCL, RCFY6024HTANMC, RCFY6024HTANMCL, RCFY6024SEANMC, RCFY6024SEANMCL, RCFY6024STANMC, RCFY6024STANMCL
68-101577-01	Insulation - Coil Door	1		RCFY2414STAAMC, RCFY2414STAAMCL
68-101577-02	Insulation - Coil Door	1		RCFY2417MTANMC, RCFY2417MTANMCL, RCFY2417SEANMC, RCFY2417SEANMCL, RCFY2417STANMC, RCFY2417STANMCL, RCFY3617STANMC, RCFY3617STANMCL
68-101577-03	Insulation - Coil Door	1		RCFY2421MEANMC, RCFY2421MTANMC, RCFY2421MTANMCL, RCFY3621STANMC, RCFY3621STANMCL
68-101577-04	Insulation - Coil Door	1		RCFY2421HEANMC, RCFY2421HEANMCL, RCFY2421HTANMC, RCFY2421HTANMCL, RCFY3621MEANMC, RCFY3621MEANMCL, RCFY3621MTANMC, RCFY3621MTANMCL, RCFY4821STANMC, RCFY4821STANMCL
68-101577-05	Insulation - Coil Door	1		RCFY3624MTANMC, RCFY3624MTANMCL, RCFY4824MTANMC, RCFY4824MTANMCL, RCFY4824STANMC, RCFY4824STANMCL, RCFY6024HTANMC, RCFY6024HTANMCL, RCFY6024SEANMC, RCFY6024SEANMCL, RCFY6024STANMC, RCFY6024STANMCL

Part No.	Description	Qty	Replaced By	Fits Models
68-100528-06	Insulation - Drain Pan - Horizontal	1		RCFY2421HEAAMC, RCFY2421HEAAMCL, RCFY3621HTAAMC, RCFY3621HTAAMCL, RCFY3621MEAAMC, RCFY3621MEAAMCL, RCFY3621MTAAMC, RCFY3621MTAAMCL, RCFY4221HTAAMC, RCFY4221HTAAMCL, RCFY4221STAAMC, RCFY4221STAAMCL, RCFY4821HTAAMC, RCFY4821HTAAMCL, RCFY4821SEAAMC, RCFY4821SEAAMCL, RCFY4821STAAMC, RCFY4821STAAMCL, RCFY6021SEAAMC, RCFY6021SEAAMCL, RCFY6021STAAMC, RCFY6021STAAMCL
68-100528-01	Insulation - Horizontal Drain Pan	1		RCFY2417MTANMC, RCFY2417MTANMCL, RCFY2421MEANMC, RCFY2421MTANMC, RCFY2421MTANMCL, RCFY3617STANMC, RCFY3617STANMCL, RCFY3621STANMC, RCFY3621STANMCL
68-100528-02	Insulation - Horizontal Drain Pan	1		RCFY2421HEANMC, RCFY2421HEANMCL, RCFY2421HTANMC, RCFY2421HTANMCL, RCFY3621MEANMC, RCFY3621MEANMCL, RCFY3621MTANMC, RCFY3621MTANMCL, RCFY3624MTANMC, RCFY3624MTANMCL, RCFY4821STANMC, RCFY4821STANMCL, RCFY4824STANMC, RCFY4824STANMCL
68-100528-03	Insulation - Horizontal Drain Pan	1		RCFY4824MTANMC, RCFY4824MTANMCL, RCFY6024HTANMC, RCFY6024HTANMCL, RCFY6024SEANMC, RCFY6024SEANMCL, RCFY6024STANMC, RCFY6024STANMCL
68-100528-04	Insulation - Horizontal Drain Pan	1		RCFY2417SEANMC, RCFY2417SEANMCL, RCFY2417STANMC, RCFY2417STANMCL
68-100528-05	Insulation - Horizontal Drain Pan	1		RCFY2414STAAMC, RCFY2414STAAMCL
64-25340-02	Locking Wing Push Mount Tie	1		All models
64-101148-06	Loop Cable Tie	1		RCFY2417SEANMC, RCFY2417SEANMCL, RCFY2417SEANVU, RCFY2421HEAAMC, RCFY2421HEAAMCL, RCFY2421HEAAVU, RCFY2421HEANMC, RCFY2421HEANMCL, RCFY2421HEANVU, RCFY2421MEANMC, RCFY2421MEANVU, RCFY3621MEAAMC, RCFY3621MEAAMCL, RCFY3621MEAAVU, RCFY3621MEANMC, RCFY3621MEANMCL, RCFY3621MEANVU, RCFY4821SEAAMC, RCFY4821SEAAMCL, RCFY4821SEAAVU, RCFY6021SEAAMC, RCFY6021SEAAMCL, RCFY6021SEAAVU, RCFY6024SEANMC, RCFY6024SEANMCL, RCFY6024SEANVU
10-101127-03	Rail - Coil	1		RCFY2421HEAAMC, RCFY2421HEAAMCL, RCFY3621HTAAMC, RCFY3621HTAAMCL, RCFY3621MEAAMC, RCFY3621MEAAMCL, RCFY3621MTAAMC, RCFY3621MTAAMCL, RCFY4221HTAAMC, RCFY4221HTAAMCL, RCFY4221STAAMC, RCFY4221STAAMCL, RCFY4821HTAAMC, RCFY4821HTAAMCL, RCFY4821SEAAMC, RCFY4821SEAAMCL, RCFY4821STAAMC, RCFY4821STAAMCL, RCFY6021SEAAMC, RCFY6021SEAAMCL, RCFY6021STAAMC, RCFY6021STAAMCL

Part No.	Description	Qty	Replaced By	Fits Models
AE-101127-01	Rail - Coil	1		RCFY2414STAAMC, RCFY2414STAAMCL, RCFY2417MTANMC, RCFY2417MTANMCL, RCFY2417SEANMC, RCFY2417SEANMCL, RCFY2417STANMC, RCFY2417STANMCL, RCFY2421HEAAMC, RCFY2421HEAAMCL, RCFY2421HEANMC, RCFY2421HEANMCL, RCFY2421HTANMC, RCFY2421HTANMCL, RCFY2421MEANMC, RCFY2421MTANMC, RCFY2421MTANMCL, RCFY3617STANMC, RCFY3617STANMCL, RCFY3621HTAAMC, RCFY3621HTAAMCL, RCFY3621MEAAMC, RCFY3621MEAAMCL, RCFY3621MEANMC, RCFY3621MEANMCL, RCFY3621MTAAMC, RCFY3621MTAAMCL, RCFY3621MTANMC, RCFY3621MTANMCL, RCFY3621STANMC, RCFY3621STANMCL, RCFY3624MTANMC, RCFY3624MTANMCL, RCFY4221HTAAMC, RCFY4221HTAAMCL, RCFY4221STAAMC, RCFY4221STAAMCL, RCFY4821HTAAMC, RCFY4821HTAAMCL, RCFY4821SEAAMC, RCFY4821SEAAMCL, RCFY4821STAAMC, RCFY4821STAAMCL, RCFY4821STANMC, RCFY4821STANMCL, RCFY4824MTANMC, RCFY4824MTANMCL, RCFY4824STANMC, RCFY4824STANMCL, RCFY6021SEAAMC, RCFY6021SEAAMCL, RCFY6021STAAMC, RCFY6021STAAMCL, RCFY6024HTANMC, RCFY6024HTANMCL, RCFY6024SEANMC, RCFY6024SEANMCL, RCFY6024STANMC, RCFY6024STANMCL
AE-101127-02	Rail - Coil	1		RCFY2414STAAMC, RCFY2414STAAMCL
AE-101550-01	Rail - Coil Top	1		RCFY2417MTANMC, RCFY2417MTANMCL, RCFY2417SEANMC, RCFY2417SEANMCL, RCFY2417STANMC, RCFY2417STANMCL, RCFY2421HEANMC, RCFY2421HEANMCL, RCFY2421HTANMC, RCFY2421HTANMCL, RCFY2421MEANMC, RCFY2421MTANMC, RCFY2421MTANMCL, RCFY3617STANMC, RCFY3617STANMCL, RCFY3621MEANMC, RCFY3621MEANMCL, RCFY3621MTANMC, RCFY3621MTANMCL, RCFY3621STANMC, RCFY3621STANMCL, RCFY3624MTANMC, RCFY3624MTANMCL, RCFY4821STANMC, RCFY4821STANMCL, RCFY4824MTANMC, RCFY4824MTANMCL, RCFY4824STANMC, RCFY4824STANMCL, RCFY6024HTANMC, RCFY6024HTANMCL, RCFY6024SEANMC, RCFY6024SEANMCL, RCFY6024STANMC, RCFY6024STANMCL

Part No.	Description	Qty	Replaced By	Fits Models
AE-101136-07	Rear/Front Shield	1		RCFY2414STAAMC, RCFY2414STAAMCL, RCFY2417MTANMC, RCFY2417MTANMCL, RCFY2417SEANMC, RCFY2417SEANMCL, RCFY2417STANMC, RCFY2417STANMCL, RCFY2421HEAAMC, RCFY2421HEAAMCL, RCFY2421HEANMC, RCFY2421HEANMCL, RCFY2421HTANMC, RCFY2421HTANMCL, RCFY2421MEANMC, RCFY2421MTANMC, RCFY2421MTANMCL, RCFY3617STANMC, RCFY3617STANMCL, RCFY3621HTAAMC, RCFY3621HTAAMCL, RCFY3621MEAAMC, RCFY3621MEAAMCL, RCFY3621MEANMC, RCFY3621MEANMCL, RCFY3621MTAAMC, RCFY3621MTAAMCL, RCFY3621MTANMC, RCFY3621MTANMCL, RCFY3621STANMC, RCFY3621STANMCL, RCFY3624MTANMC, RCFY3624MTANMCL, RCFY4221HTAAMC, RCFY4221HTAAMCL, RCFY4221STAAMC, RCFY4221STAAMCL, RCFY4821HTAAMC, RCFY4821HTAAMCL, RCFY4821SEAAMC, RCFY4821SEAAMCL, RCFY4821STAAMC, RCFY4821STAAMCL, RCFY4821STANMC, RCFY4821STANMCL, RCFY4824MTANMC, RCFY4824MTANMCL, RCFY4824STANMC, RCFY4824STANMCL, RCFY6021SEAAMC, RCFY6021SEAAMCL, RCFY6021STAAMC, RCFY6021STAAMCL, RCFY6024HTANMC, RCFY6024HTANMCL, RCFY6024SEANMC, RCFY6024SEANMCL, RCFY6024STANMC, RCFY6024STANMCL
45-103596-06	Round Flush Mount Plug	1		RCFY2414STAAMCL, RCFY2417MTANMCL, RCFY2417SEANMC, RCFY2417SEANMCL, RCFY2417SEANVU, RCFY2417STANMCL, RCFY2421HEAAMC, RCFY2421HEAAMCL, RCFY2421HEAAVU, RCFY2421HEANMC, RCFY2421HEANMCL, RCFY2421HEANVU, RCFY2421HTANMCL, RCFY2421MEANMC, RCFY2421MEANVU, RCFY2421MTANMCL, RCFY3617STANMCL, RCFY3621HTAAMCL, RCFY3621MEAAMC, RCFY3621MEAAMCL, RCFY3621MEAAVU, RCFY3621MEANMC, RCFY3621MEANMCL, RCFY3621MEANVU, RCFY3621MTAAMCL, RCFY3621MTANMCL, RCFY3621STANMCL, RCFY3624MTANMCL, RCFY4221HTAAMCL, RCFY4221STAAMCL, RCFY4821HTAAMCL, RCFY4821SEAAMC, RCFY4821SEAAMCL, RCFY4821SEAAVU, RCFY4821STAAMCL, RCFY4821STANMCL, RCFY4824MTANMCL, RCFY4824STANMCL, RCFY6021SEAAMC, RCFY6021SEAAMCL, RCFY6021SEAAVU, RCFY6021STAAMCL, RCFY6024HTANMCL, RCFY6024SEANMC, RCFY6024SEANMCL, RCFY6024SEANVU, RCFY6024STANMCL
63-22153-12	Sheet Metal Screw, 6-20 x 3/8 in.	1		RCFY2414STAAMC, RCFY2417MTANMC, RCFY2417SEANMC, RCFY2417STANMC, RCFY2421HEAAMC, RCFY2421HEANMC, RCFY2421HTANMC, RCFY2421MEANMC, RCFY2421MTANMC, RCFY3617STANMC, RCFY3621HTAAMC, RCFY3621MEAAMC, RCFY3621MEANMC, RCFY3621MTAAMC, RCFY3621MTANMC, RCFY3621STANMC, RCFY3624MTANMC, RCFY4221HTAAMC, RCFY4221STAAMC, RCFY4821HTAAMC, RCFY4821SEAAMC, RCFY4821STAAMC, RCFY4821STANMC, RCFY4824MTANMC, RCFY4824STANMC, RCFY6021SEAAMC, RCFY6021STAAMC, RCFY6024HTANMC, RCFY6024SEANMC, RCFY6024STANMC
63-22153-05	Sheet Metal Screw, 8-18 x 3/8 in.	1/2		All models
63-22153-01	Sheet Metal Screw, 8-18 x 1/2 in.	1		All models

Part No.	Description	Qty	Replaced By	Fits Models
63-24368-01	Sheet Metal Screw, 8-18 x 1/4 in.	1		RCFY2414STAAMC, RCFY2417MTANMC, RCFY2417SEANMC, RCFY2417STANMC, RCFY2421HEAAMC, RCFY2421HEANMC, RCFY2421HTANMC, RCFY2421MEANMC, RCFY2421MTANMC, RCFY3617STANMC, RCFY3621HTAAMC, RCFY3621MEAAMC, RCFY3621MEANMC, RCFY3621MTAAMC, RCFY3621MTANMC, RCFY3621STANMC, RCFY3624MTANMC, RCFY4221HTAAMC, RCFY4221STAAMC, RCFY4821HTAAMC, RCFY4821SEAAMC, RCFY4821STAAMC, RCFY4821STANMC, RCFY4824MTANMC, RCFY4824STANMC, RCFY6021SEAAMC, RCFY6021STAAMC, RCFY6024HTANMC, RCFY6024SEANMC, RCFY6024STANMC
AE-100530-07	Strap	1		RCFY2414STAAMC, RCFY2414STAAMCL, RCFY2417MTANMC, RCFY2417MTANMCL, RCFY2417SEANMC, RCFY2417SEANMCL, RCFY2417STANMC, RCFY2417STANMCL, RCFY2421HEAAMC, RCFY2421HEAAMCL, RCFY2421HEANMC, RCFY2421HEANMCL, RCFY2421HTANMC, RCFY2421HTANMCL, RCFY2421MEANMC, RCFY2421MTANMC, RCFY2421MTANMCL, RCFY3617STANMC, RCFY3617STANMCL, RCFY3621HTAAMC, RCFY3621HTAAMCL, RCFY3621MEAAMC, RCFY3621MEAAMCL, RCFY3621MEANMC, RCFY3621MEANMCL, RCFY3621MTAAMC, RCFY3621MTAAMCL, RCFY3621MTANMC, RCFY3621MTANMCL, RCFY3621STANMC, RCFY3621STANMCL, RCFY3624MTANMC, RCFY3624MTANMCL, RCFY4221HTAAMC, RCFY4221HTAAMCL, RCFY4221STAAMC, RCFY4221STAAMCL, RCFY4821HTAAMC, RCFY4821HTAAMCL, RCFY4821SEAAMC, RCFY4821SEAAMCL, RCFY4821STAAMC, RCFY4821STAAMCL, RCFY4821STANMC, RCFY4821STANMCL, RCFY4824MTANMC, RCFY4824MTANMCL, RCFY4824STANMC, RCFY4824STANMCL, RCFY6021SEAAMC, RCFY6021SEAAMCL, RCFY6021STAAMC, RCFY6021STAAMCL, RCFY6024HTANMC, RCFY6024HTANMCL, RCFY6024SEANMC, RCFY6024SEANMCL, RCFY6024STANMC, RCFY6024STANMCL
68-23534-05	Street Elbow - 45 degree	1		All models
68-23618-81	Stripping - 40 ft. Roll	1		All models
68-25024-01	Teflon Gasket	1		RCFY2417SEANMC, RCFY2417SEANMCL, RCFY2417SEANVU, RCFY2421HEAAMC, RCFY2421HEAAMCL, RCFY2421HEAAVU, RCFY2421HEANMC, RCFY2421HEANMCL, RCFY2421HEANVU, RCFY2421MEANMC, RCFY2421MEANVU, RCFY3621MEAAMC, RCFY3621MEAAMCL, RCFY3621MEAAVU, RCFY3621MEANMC, RCFY3621MEANMCL, RCFY3621MEANVU, RCFY4821SEAAMC, RCFY4821SEAAMCL, RCFY4821SEAAVU, RCFY6021SEAAMC, RCFY6021SEAAMCL, RCFY6021SEAAVU, RCFY6024SEANMC, RCFY6024SEANMCL, RCFY6024SEANVU
56-19008-02	Tube Plug	1	OBSOLETE	All models
56-19008-04	Tube Plug	1	OBSOLETE	RCFY2414STAAMC, RCFY2414STAAMCL, RCFY2414STAAVU, RCFY2417MTANMC, RCFY2417MTANMCL, RCFY2417MTANVU, RCFY2417SEANMC, RCFY2417SEANMCL, RCFY2417SEANVU, RCFY2417STANMC, RCFY2417STANMCL, RCFY2417STANVU, RCFY2421MEANMC, RCFY2421MEANVU, RCFY2421MTANMC, RCFY2421MTANMCL, RCFY2421MTANVU, RCFY3617STANMC, RCFY3617STANMCL, RCFY3617STANVU, RCFY3621STANMC, RCFY3621STANMCL, RCFY3621STANVU

Part No.	Description	Qty	Replaced By	Fits Models
56-19008-05	Tube Plug	1	OBSOLETE	RCFY2421HEAAMC, RCFY2421HEAAMCL, RCFY2421HEAAVU, RCFY2421HEANMC, RCFY2421HEANMCL, RCFY2421HEANVU, RCFY2421HTANMC, RCFY2421HTANMCL, RCFY2421HTANVU, RCFY3621HTAAMC, RCFY3621HTAAMCL, RCFY3621HTAAVU, RCFY3621MEAAMC, RCFY3621MEAAMCL, RCFY3621MEAAVU, RCFY3621MEANMC, RCFY3621MEANMCL, RCFY3621MEANVU, RCFY3621MTAAMC, RCFY3621MTAAMCL, RCFY3621MTAAVU, RCFY3621MTANMC, RCFY3621MTANMCL, RCFY3621MTANVU, RCFY3624MTANMC, RCFY3624MTANMCL, RCFY3624MTANVU, RCFY4221HTAAMC, RCFY4221HTAAMCL, RCFY4221HTAAVU, RCFY4221STAAMC, RCFY4221STAAMCL, RCFY4221STAAVU, RCFY4821HTAAMC, RCFY4821HTAAMCL, RCFY4821HTAAVU, RCFY4821SEAAMC, RCFY4821SEAAMCL, RCFY4821SEAAVU, RCFY4821STAAMC, RCFY4821STAAMCL, RCFY4821STAAVU, RCFY4821STANMC, RCFY4821STANMCL, RCFY4821STANVU, RCFY4824MTANMC, RCFY4824MTANMCL, RCFY4824MTANVU, RCFY4824STANMC, RCFY4824STANMCL, RCFY4824STANVU, RCFY6021SEAAMC, RCFY6021SEAAMCL, RCFY6021SEAAVU, RCFY6021STAAMC, RCFY6021STAAMCL, RCFY6021STAAVU, RCFY6024HTANMC, RCFY6024HTANMCL, RCFY6024HTANVU, RCFY6024SEANMC, RCFY6024SEANMCL, RCFY6024SEANVU, RCFY6024STANMC, RCFY6024STANMCL, RCFY6024STANVU
63-18604-06	Washer	1		RCFY2414STAAMC, RCFY2414STAAMCL, RCFY2414STAAVU, RCFY2417MTANMC, RCFY2417MTANMCL, RCFY2417MTANVU, RCFY2417SEANMC, RCFY2417SEANMCL, RCFY2417SEANVU, RCFY2417STANMC, RCFY2417STANMCL, RCFY2417STANVU, RCFY2421MEANMC, RCFY2421MEANVU, RCFY2421MTANMC, RCFY2421MTANMCL, RCFY2421MTANVU, RCFY3617STANMC, RCFY3617STANMCL, RCFY3617STANVU, RCFY3621STANMC, RCFY3621STANMCL, RCFY3621STANVU

Part No.	Description	Qty	Replaced By	Fits Models
63-18604-07	Washer	1		RCFY2421HEAAMC, RCFY2421HEAAMCL, RCFY2421HEAAVU, RCFY2421HEANMC, RCFY2421HEANMCL, RCFY2421HEANVU, RCFY2421HTANMC, RCFY2421HTANMCL, RCFY2421HTANVU, RCFY3621HTAAMC, RCFY3621HTAAMCL, RCFY3621HTAAVU, RCFY3621MEAAMC, RCFY3621MEAAMCL, RCFY3621MEAAVU, RCFY3621MEANMC, RCFY3621MEANMCL, RCFY3621MEANVU, RCFY3621MTAAMC, RCFY3621MTAAMCL, RCFY3621MTAAVU, RCFY3621MTANMC, RCFY3621MTANMCL, RCFY3621MTANVU, RCFY3624MTANMC, RCFY3624MTANMCL, RCFY3624MTANVU, RCFY4221HTAAMC, RCFY4221HTAAMCL, RCFY4221HTAAVU, RCFY4221STAAMC, RCFY4221STAAMCL, RCFY4221STAAVU, RCFY4821HTAAMC, RCFY4821HTAAMCL, RCFY4821HTAAVU, RCFY4821SEAAMC, RCFY4821SEAAMCL, RCFY4821SEAAVU, RCFY4821STAAMC, RCFY4821STAAMCL, RCFY4821STAAVU, RCFY4821STANMC, RCFY4821STANMCL, RCFY4821STANVU, RCFY4824MTANMC, RCFY4824MTANMCL, RCFY4824MTANVU, RCFY4824STANMC, RCFY4824STANMCL, RCFY4824STANVU, RCFY6021SEAAMC, RCFY6021SEAAMCL, RCFY6021SEAAVU, RCFY6021STAAMC, RCFY6021STAAMCL, RCFY6021STAAVU, RCFY6024HTANMC, RCFY6024HTANMCL, RCFY6024HTANVU, RCFY6024SEANMC, RCFY6024SEANMCL, RCFY6024SEANVU, RCFY6024STANMC, RCFY6024STANMCL, RCFY6024STANVU
AS-102277-04	Water Diverter/Channel/Top Air Stop Assembly	1		RCFY2414STAAMC, RCFY2414STAAMCL, RCFY2414STAAVU, RCFY2417MTANMC, RCFY2417MTANMCL, RCFY2417MTANVU, RCFY2417SEANMC, RCFY2417SEANMCL, RCFY2417SEANVU, RCFY2417STANMC, RCFY2417STANMCL, RCFY2417STANVU, RCFY2421HEANMC, RCFY2421HEANMCL, RCFY2421HEANVU, RCFY2421HTANMC, RCFY2421HTANMCL, RCFY2421HTANVU, RCFY2421MEANMC, RCFY2421MEANVU, RCFY2421MTANMC, RCFY2421MTANMCL, RCFY2421MTANVU, RCFY3617STANMC, RCFY3617STANMCL, RCFY3617STANVU, RCFY3621MEANMC, RCFY3621MEANMCL, RCFY3621MEANVU, RCFY3621MTANMC, RCFY3621MTANMCL, RCFY3621MTANVU, RCFY3621STANMC, RCFY3621STANMCL, RCFY3621STANVU, RCFY3624MTANMC, RCFY3624MTANMCL, RCFY3624MTANVU, RCFY4821STANMC, RCFY4821STANMCL, RCFY4821STANVU, RCFY4824STANMC, RCFY4824STANMCL, RCFY4824STANVU
64-17606-06	Wire & Cable Tie - Nylon Black - 7-1/2 in.	1		RCFY2414STAAVU, RCFY2417SEANMC, RCFY2417SEANMCL, RCFY2421HEAAMC, RCFY2421HEAAMCL, RCFY2421HEANMC, RCFY2421HEANMCL, RCFY2421MEANMC, RCFY3621MEAAMC, RCFY3621MEAAMCL, RCFY3621MEANMC, RCFY3621MEANMCL, RCFY4821SEAAMC, RCFY4821SEAAMCL, RCFY6021SEAAMC, RCFY6021SEAAMCL, RCFY6024SEANMC, RCFY6024SEANMCL
64-17606-01	Wire & Cable Tie - Nylon Black - 8 in.	1		All models