Rheem RF2TY Air Handler Replacement Parts List

Parts list RP-RHM-RF2TY | Updated Nov 2026 | 96 parts | 40 model numbers

Genuine Rheem OEM part numbers for the models listed below, compiled from Rheem Manufacturing's service parts catalog. Quantities are per unit. Where Rheem has replaced a part number, the current number is shown under Replaced By. Always confirm the full model and serial number of the unit before ordering.

Models covered

RF2TY2421STANSJB03, RF2TY2421STANSJB03417, RF2TY2421STANSJB0341L, RF2TY2421STANSJB03L, RF2TY2421STANSJB05, RF2TY2421STANSJB05417, RF2TY2421STANSJB0541L, RF2TY2421STANSJB05L, RF2TY2421STANSJB08, RF2TY2421STANSJB08417, RF2TY2421STANSJB0841L, RF2TY2421STANSJB08L, RF2TY2421STANSJB10, RF2TY2421STANSJB10417, RF2TY2421STANSJB1041L, RF2TY2421STANSJB10L, RF2TY2421STANSJN00, RF2TY2421STANSJN00417, RF2TY2421STANSJN0041L, RF2TY2421STANSJN00L, RF2TY3624STANSJB03, RF2TY3624STANSJB03417, RF2TY3624STANSJB0341L, RF2TY3624STANSJB03L, RF2TY3624STANSJB05, RF2TY3624STANSJB05417, RF2TY3624STANSJB0541L, RF2TY3624STANSJB05L, RF2TY3624STANSJB08, RF2TY3624STANSJB08417, RF2TY3624STANSJB0841L, RF2TY3624STANSJB08L, RF2TY3624STANSJB10, RF2TY3624STANSJB10417, RF2TY3624STANSJB1041L, RF2TY3624STANSJB10L, RF2TY3624STANSJN00, RF2TY3624STANSJN00417, RF2TY3624STANSJN0041L, RF2TY3624STANSJN00L

RF2TY parts breakdown: ADS-105108-02T 1 Exploded View 24

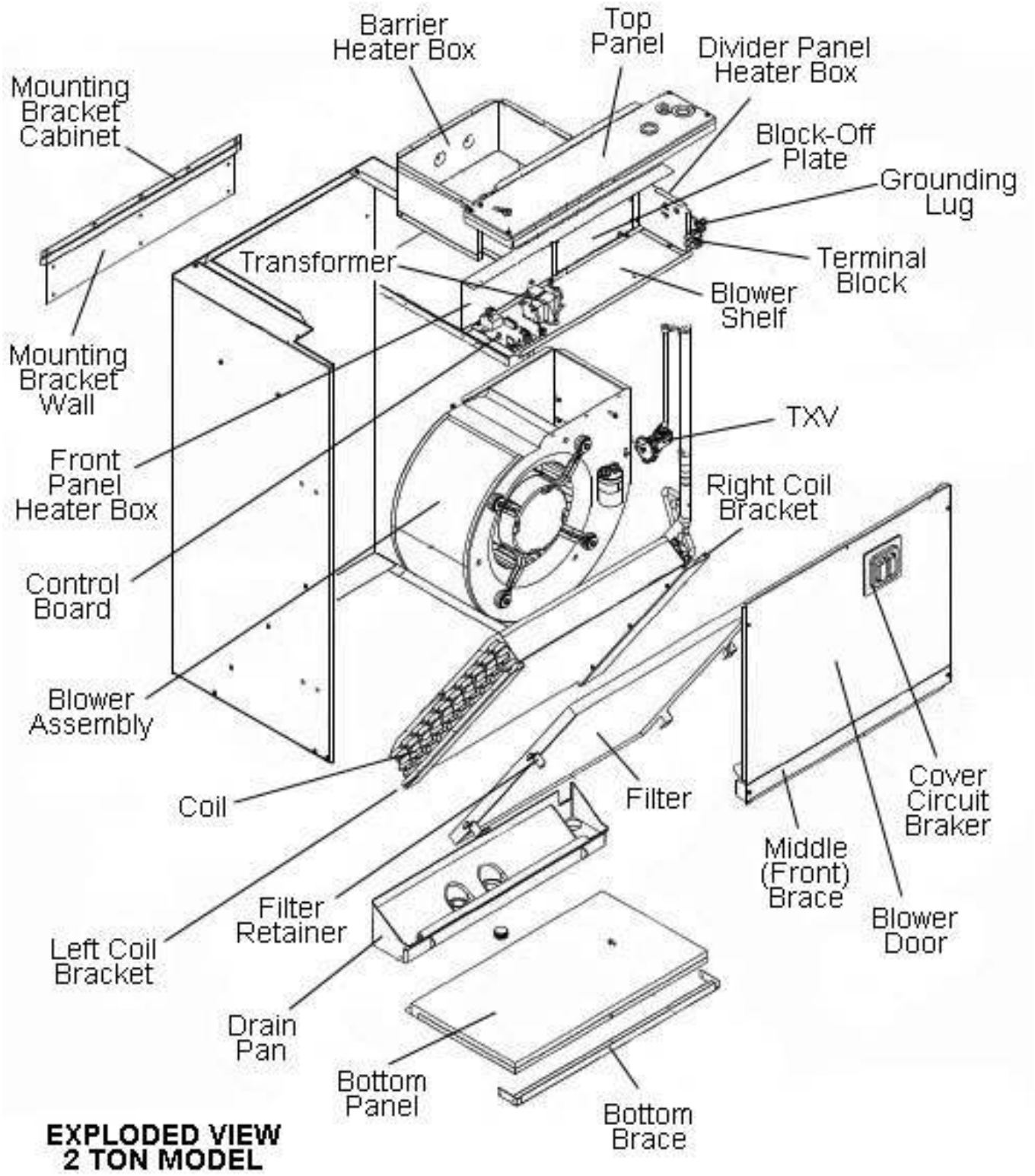

RF2TY parts breakdown: ADS-105108-02T 2 Exploded View 36

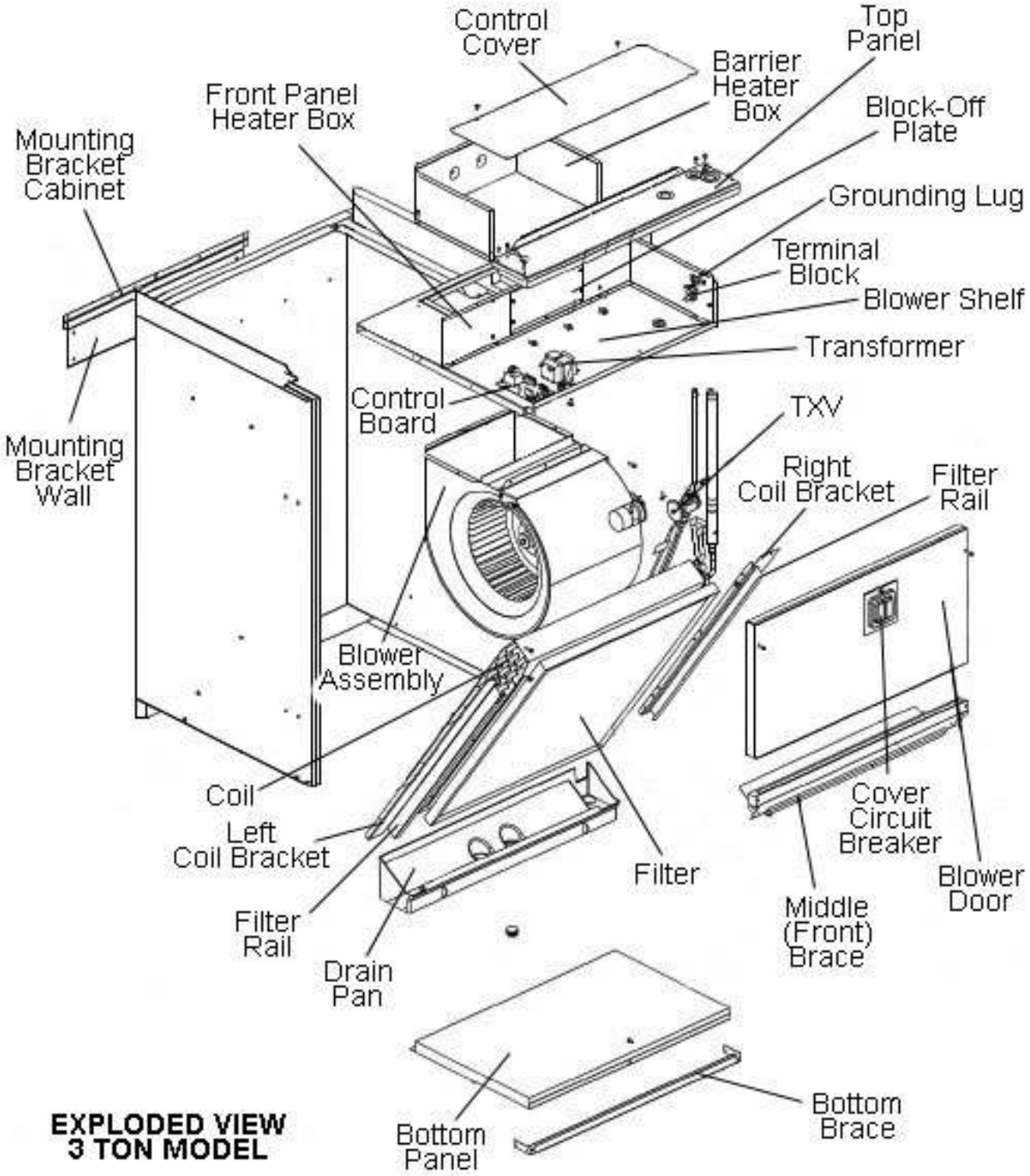

RF2TY parts breakdown: ADS-105108-09T 3 Blower Assembly

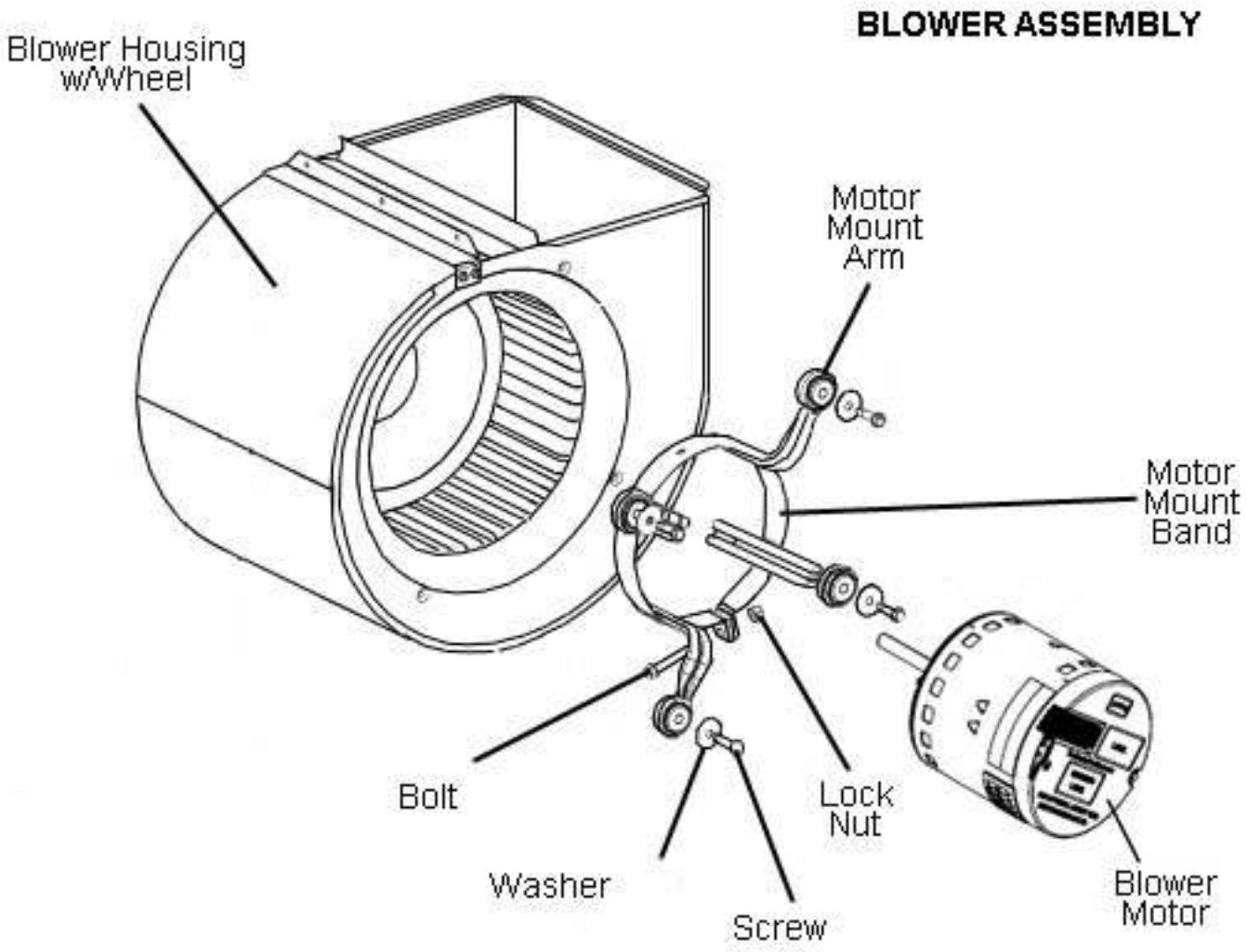

Motors & fans

Part No.	Description	Qty	Replaced By	Fits Models
AS-103222-19	Blower Assembly (2 Ton)	1		RF2TY2421STANSJB03417, RF2TY2421STANSJB0341L, RF2TY2421STANSJB03L, RF2TY2421STANSJB05417, RF2TY2421STANSJB0541L, RF2TY2421STANSJB05L, RF2TY2421STANSJB08417, RF2TY2421STANSJB0841L, RF2TY2421STANSJB08L, RF2TY2421STANSJB10417, RF2TY2421STANSJB1041L, RF2TY2421STANSJB10L, RF2TY2421STANSJN00417, RF2TY2421STANSJN0041L, RF2TY2421STANSJN00L
AS-103222-20	Blower Assembly (3 Ton)	1		RF2TY3624STANSJB03417, RF2TY3624STANSJB0341L, RF2TY3624STANSJB03L, RF2TY3624STANSJB05417, RF2TY3624STANSJB0541L, RF2TY3624STANSJB05L, RF2TY3624STANSJB08417, RF2TY3624STANSJB0841L, RF2TY3624STANSJB08L, RF2TY3624STANSJB10417, RF2TY3624STANSJB1041L, RF2TY3624STANSJB10L, RF2TY3624STANSJN00417, RF2TY3624STANSJN0041L, RF2TY3624STANSJN00L
70-104803-01	Blower Housing w/Wheel	1		RF2TY3624STANSJB03417, RF2TY3624STANSJB0341L, RF2TY3624STANSJB03L, RF2TY3624STANSJB05417, RF2TY3624STANSJB0541L, RF2TY3624STANSJB05L, RF2TY3624STANSJB08417, RF2TY3624STANSJB0841L, RF2TY3624STANSJB08L, RF2TY3624STANSJB10417, RF2TY3624STANSJB1041L, RF2TY3624STANSJB10L, RF2TY3624STANSJN00417, RF2TY3624STANSJN0041L, RF2TY3624STANSJN00L
70-104803-02	Blower Housing w/Wheel	1		RF2TY2421STANSJB03417, RF2TY2421STANSJB0341L, RF2TY2421STANSJB03L, RF2TY2421STANSJB05417, RF2TY2421STANSJB0541L, RF2TY2421STANSJB05L, RF2TY2421STANSJB08417, RF2TY2421STANSJB0841L, RF2TY2421STANSJB08L, RF2TY2421STANSJB10417, RF2TY2421STANSJB1041L, RF2TY2421STANSJB10L, RF2TY2421STANSJN00417, RF2TY2421STANSJN0041L, RF2TY2421STANSJN00L
51-108783-00	Motor - Broad Ocean (208/230 V - 1/2 hp) - BLANK	1		RF2TY3624STANSJB03417, RF2TY3624STANSJB0341L, RF2TY3624STANSJB03L, RF2TY3624STANSJB05417, RF2TY3624STANSJB0541L, RF2TY3624STANSJB05L, RF2TY3624STANSJB08417, RF2TY3624STANSJB0841L, RF2TY3624STANSJB08L, RF2TY3624STANSJB10417, RF2TY3624STANSJB1041L, RF2TY3624STANSJB10L, RF2TY3624STANSJN00417, RF2TY3624STANSJN0041L, RF2TY3624STANSJN00L
51-108782-05	Motor - Broad Ocean (208/230 V - 1/3 hp) 1 PH	1		RF2TY2421STANSJB03417, RF2TY2421STANSJB0341L, RF2TY2421STANSJB03L, RF2TY2421STANSJB05417, RF2TY2421STANSJB0541L, RF2TY2421STANSJB05L, RF2TY2421STANSJB08417, RF2TY2421STANSJB0841L, RF2TY2421STANSJB08L, RF2TY2421STANSJB10417, RF2TY2421STANSJB1041L, RF2TY2421STANSJB10L, RF2TY2421STANSJN00417, RF2TY2421STANSJN0041L, RF2TY2421STANSJN00L
51-108782-00	Motor - Broad Ocean (208/230 V - 1/3 hp) 1 PH-BLANK	1		RF2TY2421STANSJB03417, RF2TY2421STANSJB0341L, RF2TY2421STANSJB03L, RF2TY2421STANSJB05417, RF2TY2421STANSJB0541L, RF2TY2421STANSJB05L, RF2TY2421STANSJB08417, RF2TY2421STANSJB0841L, RF2TY2421STANSJB08L, RF2TY2421STANSJB10417, RF2TY2421STANSJB1041L, RF2TY2421STANSJB10L, RF2TY2421STANSJN00417, RF2TY2421STANSJN0041L, RF2TY2421STANSJN00L

Part No.	Description	Qty	Replaced By	Fits Models
70-19929-10	Motor Mount Arm w/Grommet	2		RF2TY2421STANSJB03417, RF2TY2421STANSJB0341L, RF2TY2421STANSJB03L, RF2TY2421STANSJB05417, RF2TY2421STANSJB0541L, RF2TY2421STANSJB05L, RF2TY2421STANSJB08417, RF2TY2421STANSJB0841L, RF2TY2421STANSJB08L, RF2TY2421STANSJB10417, RF2TY2421STANSJB1041L, RF2TY2421STANSJB10L, RF2TY2421STANSJN00417, RF2TY2421STANSJN0041L, RF2TY2421STANSJN00L
70-19929-11	Motor Mount Arm w/Grommet	2		RF2TY3624STANSJB03417, RF2TY3624STANSJB0341L, RF2TY3624STANSJB03L, RF2TY3624STANSJB05417, RF2TY3624STANSJB0541L, RF2TY3624STANSJB05L, RF2TY3624STANSJB08417, RF2TY3624STANSJB0841L, RF2TY3624STANSJB08L, RF2TY3624STANSJB10417, RF2TY3624STANSJB1041L, RF2TY3624STANSJB10L, RF2TY3624STANSJN00417, RF2TY3624STANSJN0041L, RF2TY3624STANSJN00L
70-19927-04	Motor Mount Band	1		All models

Electrical

Part No.	Description	Qty	Replaced By	Fits Models
47-100436-09	Control Board	1		All models
45-19000-01	Ground Lug	1		All models
45-18058-07	Ivory Twist-On Wire Connector - 24-16 AWG	1		RF2TY2421STANSJB03417, RF2TY2421STANSJB0341L, RF2TY2421STANSJB05417, RF2TY2421STANSJB0541L, RF2TY2421STANSJB08417, RF2TY2421STANSJB0841L, RF2TY2421STANSJB10417, RF2TY2421STANSJB1041L, RF2TY2421STANSJN00417, RF2TY2421STANSJN0041L, RF2TY3624STANSJB03417, RF2TY3624STANSJB0341L, RF2TY3624STANSJB05417, RF2TY3624STANSJB0541L, RF2TY3624STANSJB08417, RF2TY3624STANSJB0841L, RF2TY3624STANSJB10417, RF2TY3624STANSJB1041L, RF2TY3624STANSJN00417, RF2TY3624STANSJN0041L
45-101891-12	Plug Housing Assembly	1		RF2TY2421STANSJB0341L, RF2TY2421STANSJB03L, RF2TY2421STANSJB0541L, RF2TY2421STANSJB05L, RF2TY2421STANSJB0841L, RF2TY2421STANSJB08L, RF2TY2421STANSJB1041L, RF2TY2421STANSJB10L, RF2TY2421STANSJN0041L, RF2TY2421STANSJN00L, RF2TY3624STANSJB0341L, RF2TY3624STANSJB03L, RF2TY3624STANSJB0541L, RF2TY3624STANSJB05L, RF2TY3624STANSJB0841L, RF2TY3624STANSJB08L, RF2TY3624STANSJB1041L, RF2TY3624STANSJB10L, RF2TY3624STANSJN0041L, RF2TY3624STANSJN00L
45-109519-12	Plug Housing Assembly A2L Air Handler	1		RF2TY2421STANSJB03417, RF2TY2421STANSJB05417, RF2TY2421STANSJB08417, RF2TY2421STANSJB10417, RF2TY2421STANSJN00417, RF2TY3624STANSJB03417, RF2TY3624STANSJB05417, RF2TY3624STANSJB08417, RF2TY3624STANSJB10417, RF2TY3624STANSJN00417

Part No.	Description	Qty	Replaced By	Fits Models
45-109872-05	Plug Housing Assembly A2L T-Stat	1		RF2TY2421STANSJB03417, RF2TY2421STANSJB05417, RF2TY2421STANSJB08417, RF2TY2421STANSJB10417, RF2TY2421STANSJN00417, RF2TY3624STANSJB03417, RF2TY3624STANSJB05417, RF2TY3624STANSJB08417, RF2TY3624STANSJB10417, RF2TY3624STANSJN00417
45-21684-02	Quick Connect Terminal	1		All models
47-109642-01	Sensor A2L (Sensirion)	1		RF2TY2421STANSJB03417, RF2TY2421STANSJB05417, RF2TY2421STANSJB08417, RF2TY2421STANSJB10417, RF2TY2421STANSJN00417, RF2TY3624STANSJB03417, RF2TY3624STANSJB05417, RF2TY3624STANSJB08417, RF2TY3624STANSJB10417, RF2TY3624STANSJN00417
45-23222-02	Terminal Block	1		All models
46-101905-01	Transformer	1		All models
45-102868-06	Wire Insulation Retainer	1		RF2TY2421STANSJB03417, RF2TY2421STANSJB0341L, RF2TY2421STANSJB03L, RF2TY2421STANSJB05417, RF2TY2421STANSJB0541L, RF2TY2421STANSJB05L, RF2TY2421STANSJB08417, RF2TY2421STANSJB0841L, RF2TY2421STANSJB08L, RF2TY2421STANSJB10417, RF2TY2421STANSJB1041L, RF2TY2421STANSJB10L, RF2TY2421STANSJN00417, RF2TY2421STANSJN0041L, RF2TY2421STANSJN00L
45-102868-07	Wire Insulation Retainer	1		RF2TY3624STANSJB03417, RF2TY3624STANSJB0341L, RF2TY3624STANSJB03L, RF2TY3624STANSJB05417, RF2TY3624STANSJB0541L, RF2TY3624STANSJB05L, RF2TY3624STANSJB08417, RF2TY3624STANSJB0841L, RF2TY3624STANSJB08L, RF2TY3624STANSJB10417, RF2TY3624STANSJB1041L, RF2TY3624STANSJB10L, RF2TY3624STANSJN00417, RF2TY3624STANSJN0041L, RF2TY3624STANSJN00L
45-24371-57	Wiring Harness	1		All models

Coil & refrigeration

Part No.	Description	Qty	Replaced By	Fits Models
AS-105027-02	Circuited Coil Assembly R/00	1		RF2TY3624STANSJB03417, RF2TY3624STANSJB0341L, RF2TY3624STANSJB03L, RF2TY3624STANSJB05417, RF2TY3624STANSJB0541L, RF2TY3624STANSJB05L, RF2TY3624STANSJB08417, RF2TY3624STANSJB0841L, RF2TY3624STANSJB08L, RF2TY3624STANSJB10417, RF2TY3624STANSJB1041L, RF2TY3624STANSJB10L, RF2TY3624STANSJN00417, RF2TY3624STANSJN0041L, RF2TY3624STANSJN00L
61-109959-01V	Expansion Valve (TXV) - Valve Only	1		RF2TY2421STANSJB03417, RF2TY2421STANSJB0341L, RF2TY2421STANSJB03L, RF2TY2421STANSJB05417, RF2TY2421STANSJB0541L, RF2TY2421STANSJB05L, RF2TY2421STANSJB08417, RF2TY2421STANSJB0841L, RF2TY2421STANSJB08L, RF2TY2421STANSJB10417, RF2TY2421STANSJB1041L, RF2TY2421STANSJB10L, RF2TY2421STANSJN00417, RF2TY2421STANSJN0041L, RF2TY2421STANSJN00L

Part No.	Description	Qty	Replaced By	Fits Models
61-109959-02V	Expansion Valve (TXV) - Valve Only	1		RF2TY3624STANSJB03417, RF2TY3624STANSJB0341L, RF2TY3624STANSJB03L, RF2TY3624STANSJB05417, RF2TY3624STANSJB0541L, RF2TY3624STANSJB05L, RF2TY3624STANSJB08417, RF2TY3624STANSJB0841L, RF2TY3624STANSJB08L, RF2TY3624STANSJB10417, RF2TY3624STANSJB1041L, RF2TY3624STANSJB10L, RF2TY3624STANSJN00417, RF2TY3624STANSJN0041L, RF2TY3624STANSJN00L
82-105029-01	Header Assembly	1		RF2TY2421STANSJB03417, RF2TY2421STANSJB0341L, RF2TY2421STANSJB03L, RF2TY2421STANSJB05417, RF2TY2421STANSJB0541L, RF2TY2421STANSJB05L, RF2TY2421STANSJB08417, RF2TY2421STANSJB0841L, RF2TY2421STANSJB08L, RF2TY2421STANSJB10417, RF2TY2421STANSJB1041L, RF2TY2421STANSJB10L, RF2TY2421STANSJN00417, RF2TY2421STANSJN0041L, RF2TY2421STANSJN00L
82-105029-02	Header Assembly	1		RF2TY3624STANSJB03417, RF2TY3624STANSJB0341L, RF2TY3624STANSJB03L, RF2TY3624STANSJB05417, RF2TY3624STANSJB0541L, RF2TY3624STANSJB05L, RF2TY3624STANSJB08417, RF2TY3624STANSJB0841L, RF2TY3624STANSJB08L, RF2TY3624STANSJB10417, RF2TY3624STANSJB1041L, RF2TY3624STANSJB10L, RF2TY3624STANSJN00417, RF2TY3624STANSJN0041L, RF2TY3624STANSJN00L
RCHY3624STASVU	RCHY3624STASVU R-454B TXV S-Coil Vertical Only Uncased	1		
64-21106-02	TXV Bulb Strap Mounting Kit	1		All models

Cabinet & hardware

Part No.	Description	Qty	Replaced By	Fits Models
AE-103093-11	Blower Door	1		RF2TY2421STANSJB03417, RF2TY2421STANSJB0341L, RF2TY2421STANSJB03L, RF2TY2421STANSJB05417, RF2TY2421STANSJB0541L, RF2TY2421STANSJB05L, RF2TY2421STANSJB08417, RF2TY2421STANSJB0841L, RF2TY2421STANSJB08L, RF2TY2421STANSJB10417, RF2TY2421STANSJB1041L, RF2TY2421STANSJB10L
AE-103093-14	Blower Door	1		RF2TY3624STANSJB03417, RF2TY3624STANSJB0341L, RF2TY3624STANSJB03L, RF2TY3624STANSJB05417, RF2TY3624STANSJB0541L, RF2TY3624STANSJB05L, RF2TY3624STANSJB08417, RF2TY3624STANSJB0841L, RF2TY3624STANSJB08L, RF2TY3624STANSJB10417, RF2TY3624STANSJB1041L, RF2TY3624STANSJB10L
AE-103093-17	Blower Door	1		RF2TY2421STANSJN00417, RF2TY2421STANSJN0041L, RF2TY2421STANSJN00L
AE-103093-18	Blower Door	1		RF2TY3624STANSJN00417, RF2TY3624STANSJN0041L, RF2TY3624STANSJN00L
AE-103096-15	Blower Shelf	1		RF2TY2421STANSJB03417, RF2TY2421STANSJB0341L, RF2TY2421STANSJB03L, RF2TY2421STANSJB05417, RF2TY2421STANSJB0541L, RF2TY2421STANSJB05L, RF2TY2421STANSJB08417, RF2TY2421STANSJB0841L, RF2TY2421STANSJB08L, RF2TY2421STANSJB10417, RF2TY2421STANSJB1041L, RF2TY2421STANSJB10L, RF2TY2421STANSJN00417, RF2TY2421STANSJN0041L, RF2TY2421STANSJN00L
63-19919-01	Bolt, 1/4-20 x 1-1/2 in.	1		All models

Part No.	Description	Qty	Replaced By	Fits Models
AE-103100-01	Bottom Brace	1		RF2TY2421STANSJB03417, RF2TY2421STANSJB0341L, RF2TY2421STANSJB03L, RF2TY2421STANSJB05417, RF2TY2421STANSJB0541L, RF2TY2421STANSJB05L, RF2TY2421STANSJB08417, RF2TY2421STANSJB0841L, RF2TY2421STANSJB08L, RF2TY2421STANSJB10417, RF2TY2421STANSJB1041L, RF2TY2421STANSJB10L, RF2TY2421STANSJN00417, RF2TY2421STANSJN0041L, RF2TY2421STANSJN00L
AE-103098-03	Bottom Plate	1		RF2TY2421STANSJB03417, RF2TY2421STANSJB0341L, RF2TY2421STANSJB03L, RF2TY2421STANSJB05417, RF2TY2421STANSJB0541L, RF2TY2421STANSJB05L, RF2TY2421STANSJB08417, RF2TY2421STANSJB0841L, RF2TY2421STANSJB08L, RF2TY2421STANSJB10417, RF2TY2421STANSJB1041L, RF2TY2421STANSJB10L, RF2TY2421STANSJN00417, RF2TY2421STANSJN0041L, RF2TY2421STANSJN00L
AE-109597-01	Bracket - A2L Sensor	1		All models
45-17055-11	Bushing - Strain Relief	1		All models
45-17055-19	Bushing - Strain Relief	1		All models
AE-103092-12	Cabinet Front Return Air Handler	1		RF2TY2421STANSJB03417, RF2TY2421STANSJB0341L, RF2TY2421STANSJB03L, RF2TY2421STANSJB05417, RF2TY2421STANSJB0541L, RF2TY2421STANSJB05L, RF2TY2421STANSJB08417, RF2TY2421STANSJB0841L, RF2TY2421STANSJB08L, RF2TY2421STANSJB10417, RF2TY2421STANSJB1041L, RF2TY2421STANSJB10L, RF2TY2421STANSJN00417, RF2TY2421STANSJN0041L, RF2TY2421STANSJN00L
AE-103092-13	Cabinet Front Return Air Handler	1		RF2TY3624STANSJB03417, RF2TY3624STANSJB0341L, RF2TY3624STANSJB03L, RF2TY3624STANSJB05417, RF2TY3624STANSJB0541L, RF2TY3624STANSJB05L, RF2TY3624STANSJB08417, RF2TY3624STANSJB0841L, RF2TY3624STANSJB08L, RF2TY3624STANSJB10417, RF2TY3624STANSJB1041L, RF2TY3624STANSJB10L, RF2TY3624STANSJN00417, RF2TY3624STANSJN0041L, RF2TY3624STANSJN00L
64-101148-06	Cable Tie - Double Loop, 7.6"	1		All models
68-103316-01	Circuit Breaker Cover	1		RF2TY2421STANSJB03417, RF2TY2421STANSJB0341L, RF2TY2421STANSJB03L, RF2TY2421STANSJB05417, RF2TY2421STANSJB0541L, RF2TY2421STANSJB05L, RF2TY2421STANSJB08417, RF2TY2421STANSJB0841L, RF2TY2421STANSJB08L, RF2TY2421STANSJB10417, RF2TY2421STANSJB1041L, RF2TY2421STANSJB10L, RF2TY3624STANSJB03417, RF2TY3624STANSJB0341L, RF2TY3624STANSJB03L, RF2TY3624STANSJB05417, RF2TY3624STANSJB0541L, RF2TY3624STANSJB05L, RF2TY3624STANSJB08417, RF2TY3624STANSJB0841L, RF2TY3624STANSJB08L, RF2TY3624STANSJB10417, RF2TY3624STANSJB1041L, RF2TY3624STANSJB10L
10-103106-08	Coil Bracket - Left	1		RF2TY3624STANSJB03417, RF2TY3624STANSJB0341L, RF2TY3624STANSJB03L, RF2TY3624STANSJB05417, RF2TY3624STANSJB0541L, RF2TY3624STANSJB05L, RF2TY3624STANSJB08417, RF2TY3624STANSJB0841L, RF2TY3624STANSJB08L, RF2TY3624STANSJB10417, RF2TY3624STANSJB1041L, RF2TY3624STANSJB10L, RF2TY3624STANSJN00417, RF2TY3624STANSJN0041L, RF2TY3624STANSJN00L

Part No.	Description	Qty	Replaced By	Fits Models
10-103106-11	Coil Bracket - Left	1		RF2TY2421STANSJB03417, RF2TY2421STANSJB0341L, RF2TY2421STANSJB03L, RF2TY2421STANSJB05417, RF2TY2421STANSJB0541L, RF2TY2421STANSJB05L, RF2TY2421STANSJB08417, RF2TY2421STANSJB0841L, RF2TY2421STANSJB08L, RF2TY2421STANSJB10417, RF2TY2421STANSJB1041L, RF2TY2421STANSJB10L, RF2TY2421STANSJN00417, RF2TY2421STANSJN0041L, RF2TY2421STANSJN00L
10-103106-09	Coil Bracket - Right	1		RF2TY3624STANSJB03417, RF2TY3624STANSJB0341L, RF2TY3624STANSJB03L, RF2TY3624STANSJB05417, RF2TY3624STANSJB0541L, RF2TY3624STANSJB05L, RF2TY3624STANSJB08417, RF2TY3624STANSJB0841L, RF2TY3624STANSJB08L, RF2TY3624STANSJB10417, RF2TY3624STANSJB1041L, RF2TY3624STANSJB10L, RF2TY3624STANSJN00417, RF2TY3624STANSJN0041L, RF2TY3624STANSJN00L
10-103106-12	Coil Bracket - Right	1		RF2TY2421STANSJB03417, RF2TY2421STANSJB0341L, RF2TY2421STANSJB03L, RF2TY2421STANSJB05417, RF2TY2421STANSJB0541L, RF2TY2421STANSJB05L, RF2TY2421STANSJB08417, RF2TY2421STANSJB0841L, RF2TY2421STANSJB08L, RF2TY2421STANSJB10417, RF2TY2421STANSJB1041L, RF2TY2421STANSJB10L, RF2TY2421STANSJN00417, RF2TY2421STANSJN0041L, RF2TY2421STANSJN00L
68-103682-03	Coil Seal	1		RF2TY2421STANSJB03417, RF2TY2421STANSJB0341L, RF2TY2421STANSJB03L, RF2TY2421STANSJB05417, RF2TY2421STANSJB0541L, RF2TY2421STANSJB05L, RF2TY2421STANSJB08417, RF2TY2421STANSJB0841L, RF2TY2421STANSJB08L, RF2TY2421STANSJB10417, RF2TY2421STANSJB1041L, RF2TY2421STANSJB10L, RF2TY2421STANSJN00417, RF2TY2421STANSJN0041L, RF2TY2421STANSJN00L
68-103682-04	Coil Seal	1		RF2TY3624STANSJB03417, RF2TY3624STANSJB0341L, RF2TY3624STANSJB03L, RF2TY3624STANSJB05417, RF2TY3624STANSJB0541L, RF2TY3624STANSJB05L, RF2TY3624STANSJB08417, RF2TY3624STANSJB0841L, RF2TY3624STANSJB08L, RF2TY3624STANSJB10417, RF2TY3624STANSJB1041L, RF2TY3624STANSJB10L, RF2TY3624STANSJN00417, RF2TY3624STANSJN0041L, RF2TY3624STANSJN00L
AE-103328-01	Control Cover	1		RF2TY3624STANSJB03417, RF2TY3624STANSJB0341L, RF2TY3624STANSJB03L, RF2TY3624STANSJB05417, RF2TY3624STANSJB0541L, RF2TY3624STANSJB05L, RF2TY3624STANSJB08417, RF2TY3624STANSJB0841L, RF2TY3624STANSJB08L, RF2TY3624STANSJB10417, RF2TY3624STANSJB1041L, RF2TY3624STANSJB10L, RF2TY3624STANSJN00417, RF2TY3624STANSJN0041L, RF2TY3624STANSJN00L
68-103104-01	Drain Pan	1		RF2TY2421STANSJB03417, RF2TY2421STANSJB0341L, RF2TY2421STANSJB03L, RF2TY2421STANSJB05417, RF2TY2421STANSJB0541L, RF2TY2421STANSJB05L, RF2TY2421STANSJB08417, RF2TY2421STANSJB0841L, RF2TY2421STANSJB08L, RF2TY2421STANSJB10417, RF2TY2421STANSJB1041L, RF2TY2421STANSJB10L, RF2TY2421STANSJN00417, RF2TY2421STANSJN0041L, RF2TY2421STANSJN00L

Part No.	Description	Qty	Replaced By	Fits Models
68-103104-02	Drain Pan	1		RF2TY3624STANSJB03417, RF2TY3624STANSJB0341L, RF2TY3624STANSJB03L, RF2TY3624STANSJB05417, RF2TY3624STANSJB0541L, RF2TY3624STANSJB05L, RF2TY3624STANSJB08417, RF2TY3624STANSJB0841L, RF2TY3624STANSJB08L, RF2TY3624STANSJB10417, RF2TY3624STANSJB1041L, RF2TY3624STANSJB10L, RF2TY3624STANSJN00417, RF2TY3624STANSJN0041L, RF2TY3624STANSJN00L
42-103356-02	Drain Pan Overflow Protection Switch	1		RF2TY2421STANSJB03417, RF2TY2421STANSJB0341L, RF2TY2421STANSJB05417, RF2TY2421STANSJB0541L, RF2TY2421STANSJB08417, RF2TY2421STANSJB0841L, RF2TY2421STANSJB10417, RF2TY2421STANSJB1041L, RF2TY2421STANSJN00417, RF2TY2421STANSJN0041L, RF2TY3624STANSJB03417, RF2TY3624STANSJB0341L, RF2TY3624STANSJB05417, RF2TY3624STANSJB0541L, RF2TY3624STANSJB08417, RF2TY3624STANSJB0841L, RF2TY3624STANSJB10417, RF2TY3624STANSJB1041L, RF2TY3624STANSJN00417, RF2TY3624STANSJN0041L
68-100070-02	Drain Plug	1		All models
54-17531-04	Filter - Disposable Fiberglass	1		RF2TY2421STANSJB03417, RF2TY2421STANSJB0341L, RF2TY2421STANSJB03L, RF2TY2421STANSJB05417, RF2TY2421STANSJB0541L, RF2TY2421STANSJB05L, RF2TY2421STANSJB08417, RF2TY2421STANSJB0841L, RF2TY2421STANSJB08L, RF2TY2421STANSJB10417, RF2TY2421STANSJB1041L, RF2TY2421STANSJB10L, RF2TY2421STANSJN00417, RF2TY2421STANSJN0041L, RF2TY2421STANSJN00L
54-17531-06	Filter - Disposable Fiberglass	1		RF2TY3624STANSJB03417, RF2TY3624STANSJB0341L, RF2TY3624STANSJB03L, RF2TY3624STANSJB05417, RF2TY3624STANSJB0541L, RF2TY3624STANSJB05L, RF2TY3624STANSJB08417, RF2TY3624STANSJB0841L, RF2TY3624STANSJB08L, RF2TY3624STANSJB10417, RF2TY3624STANSJB1041L, RF2TY3624STANSJB10L, RF2TY3624STANSJN00417, RF2TY3624STANSJN0041L, RF2TY3624STANSJN00L
10-103218-05	Filter Rail	1		RF2TY3624STANSJB03417, RF2TY3624STANSJB0341L, RF2TY3624STANSJB03L, RF2TY3624STANSJB05417, RF2TY3624STANSJB0541L, RF2TY3624STANSJB05L, RF2TY3624STANSJB08417, RF2TY3624STANSJB0841L, RF2TY3624STANSJB08L, RF2TY3624STANSJB10417, RF2TY3624STANSJB1041L, RF2TY3624STANSJB10L, RF2TY3624STANSJN00417, RF2TY3624STANSJN0041L, RF2TY3624STANSJN00L
10-103218-01	Filter Retainer	1		RF2TY2421STANSJB03417, RF2TY2421STANSJB0341L, RF2TY2421STANSJB03L, RF2TY2421STANSJB05417, RF2TY2421STANSJB0541L, RF2TY2421STANSJB05L, RF2TY2421STANSJB08417, RF2TY2421STANSJB0841L, RF2TY2421STANSJB08L, RF2TY2421STANSJB10417, RF2TY2421STANSJB1041L, RF2TY2421STANSJB10L, RF2TY2421STANSJN00417, RF2TY2421STANSJN0041L, RF2TY2421STANSJN00L
64-24081-81	Furnace Door Insert/Thumbscrew Kit	1		All models

Part No.	Description	Qty	Replaced By	Fits Models
68-22079-87	Gasket - Neoprene (1/4 in. x 3/4 in.) - 100 ft. Roll	1		RF2TY3624STANSJB03417, RF2TY3624STANSJB0341L, RF2TY3624STANSJB03L, RF2TY3624STANSJB05417, RF2TY3624STANSJB0541L, RF2TY3624STANSJB05L, RF2TY3624STANSJB08417, RF2TY3624STANSJB0841L, RF2TY3624STANSJB08L, RF2TY3624STANSJB10417, RF2TY3624STANSJB1041L, RF2TY3624STANSJB10L, RF2TY3624STANSJN00417, RF2TY3624STANSJN0041L, RF2TY3624STANSJN00L
56-22521-02	Grommet - Drain Tubing	1		All models
56-22521-05	Grommet - Drain Tubing	1		All models
AE-103098-02	Heater Box Barrier	1		RF2TY3624STANSJB03417, RF2TY3624STANSJB0341L, RF2TY3624STANSJB03L, RF2TY3624STANSJB05417, RF2TY3624STANSJB0541L, RF2TY3624STANSJB05L, RF2TY3624STANSJB08417, RF2TY3624STANSJB0841L, RF2TY3624STANSJB08L, RF2TY3624STANSJB10417, RF2TY3624STANSJB1041L, RF2TY3624STANSJB10L, RF2TY3624STANSJN00417, RF2TY3624STANSJN0041L, RF2TY3624STANSJN00L
AE-103098-08	Heater Box Barrier	1		RF2TY2421STANSJB03417, RF2TY2421STANSJB0341L, RF2TY2421STANSJB03L, RF2TY2421STANSJB05417, RF2TY2421STANSJB0541L, RF2TY2421STANSJB05L, RF2TY2421STANSJB08417, RF2TY2421STANSJB0841L, RF2TY2421STANSJB08L, RF2TY2421STANSJB10417, RF2TY2421STANSJB1041L, RF2TY2421STANSJB10L, RF2TY2421STANSJN00417, RF2TY2421STANSJN0041L, RF2TY2421STANSJN00L
AE-103098-10	Heater Box Divider Panel	1		RF2TY2421STANSJB03417, RF2TY2421STANSJB0341L, RF2TY2421STANSJB03L, RF2TY2421STANSJB05417, RF2TY2421STANSJB0541L, RF2TY2421STANSJB05L, RF2TY2421STANSJB08417, RF2TY2421STANSJB0841L, RF2TY2421STANSJB08L, RF2TY2421STANSJB10417, RF2TY2421STANSJB1041L, RF2TY2421STANSJB10L, RF2TY2421STANSJN00417, RF2TY2421STANSJN0041L, RF2TY2421STANSJN00L
AE-103098-09	Heater Box Front Panel	1		RF2TY2421STANSJB03417, RF2TY2421STANSJB0341L, RF2TY2421STANSJB03L, RF2TY2421STANSJB05417, RF2TY2421STANSJB0541L, RF2TY2421STANSJB05L, RF2TY2421STANSJB08417, RF2TY2421STANSJB0841L, RF2TY2421STANSJB08L, RF2TY2421STANSJB10417, RF2TY2421STANSJB1041L, RF2TY2421STANSJB10L, RF2TY2421STANSJN00417, RF2TY2421STANSJN0041L, RF2TY2421STANSJN00L
63-17189-03	Hex Nut, 1/4-20, w/External Tooth Lock Washer	1		All models
68-103240-03	Insulation - Blower Door	1		RF2TY2421STANSJB03417, RF2TY2421STANSJB0341L, RF2TY2421STANSJB03L, RF2TY2421STANSJB05417, RF2TY2421STANSJB0541L, RF2TY2421STANSJB05L, RF2TY2421STANSJB08417, RF2TY2421STANSJB0841L, RF2TY2421STANSJB08L, RF2TY2421STANSJB10417, RF2TY2421STANSJB1041L, RF2TY2421STANSJB10L, RF2TY2421STANSJN00417, RF2TY2421STANSJN0041L, RF2TY2421STANSJN00L
68-103240-13	Insulation - Blower Door	1		RF2TY3624STANSJB03417, RF2TY3624STANSJB0341L, RF2TY3624STANSJB03L, RF2TY3624STANSJB05417, RF2TY3624STANSJB0541L, RF2TY3624STANSJB05L, RF2TY3624STANSJB08417, RF2TY3624STANSJB0841L, RF2TY3624STANSJB08L, RF2TY3624STANSJB10417, RF2TY3624STANSJB1041L, RF2TY3624STANSJB10L, RF2TY3624STANSJN00417, RF2TY3624STANSJN0041L, RF2TY3624STANSJN00L

Part No.	Description	Qty	Replaced By	Fits Models
68-103240-05	Insulation - Bottom Panel	1		RF2TY3624STANSJB03417, RF2TY3624STANSJB0341L, RF2TY3624STANSJB03L, RF2TY3624STANSJB05417, RF2TY3624STANSJB0541L, RF2TY3624STANSJB05L, RF2TY3624STANSJB08417, RF2TY3624STANSJB0841L, RF2TY3624STANSJB08L, RF2TY3624STANSJB10417, RF2TY3624STANSJB1041L, RF2TY3624STANSJB10L, RF2TY3624STANSJN00417, RF2TY3624STANSJN0041L, RF2TY3624STANSJN00L
68-103240-17	Insulation - Bottom Panel	1		RF2TY2421STANSJB03417, RF2TY2421STANSJB0341L, RF2TY2421STANSJB03L, RF2TY2421STANSJB05417, RF2TY2421STANSJB0541L, RF2TY2421STANSJB05L, RF2TY2421STANSJB08417, RF2TY2421STANSJB0841L, RF2TY2421STANSJB08L, RF2TY2421STANSJB10417, RF2TY2421STANSJB1041L, RF2TY2421STANSJB10L, RF2TY2421STANSJN00417, RF2TY2421STANSJN0041L, RF2TY2421STANSJN00L
68-103240-12	Insulation - Front Brace	1		RF2TY3624STANSJB03417, RF2TY3624STANSJB0341L, RF2TY3624STANSJB03L, RF2TY3624STANSJB05417, RF2TY3624STANSJB0541L, RF2TY3624STANSJB05L, RF2TY3624STANSJB08417, RF2TY3624STANSJB0841L, RF2TY3624STANSJB08L, RF2TY3624STANSJB10417, RF2TY3624STANSJB1041L, RF2TY3624STANSJB10L, RF2TY3624STANSJN00417, RF2TY3624STANSJN0041L, RF2TY3624STANSJN00L
68-103240-07	Insulation - Middle Brace	1		RF2TY2421STANSJB03417, RF2TY2421STANSJB0341L, RF2TY2421STANSJB03L, RF2TY2421STANSJB05417, RF2TY2421STANSJB0541L, RF2TY2421STANSJB05L, RF2TY2421STANSJB08417, RF2TY2421STANSJB0841L, RF2TY2421STANSJB08L, RF2TY2421STANSJB10417, RF2TY2421STANSJB1041L, RF2TY2421STANSJB10L, RF2TY2421STANSJN00417, RF2TY2421STANSJN0041L, RF2TY2421STANSJN00L
68-103240-02	Insulation - Top Panel	1		RF2TY3624STANSJB03417, RF2TY3624STANSJB0341L, RF2TY3624STANSJB03L, RF2TY3624STANSJB05417, RF2TY3624STANSJB0541L, RF2TY3624STANSJB05L, RF2TY3624STANSJB08417, RF2TY3624STANSJB0841L, RF2TY3624STANSJB08L, RF2TY3624STANSJB10417, RF2TY3624STANSJB1041L, RF2TY3624STANSJB10L, RF2TY3624STANSJN00417, RF2TY3624STANSJN0041L, RF2TY3624STANSJN00L
68-103240-09	Insulation - Top Panel	1		RF2TY2421STANSJB03417, RF2TY2421STANSJB0341L, RF2TY2421STANSJB03L, RF2TY2421STANSJB05417, RF2TY2421STANSJB0541L, RF2TY2421STANSJB05L, RF2TY2421STANSJB08417, RF2TY2421STANSJB0841L, RF2TY2421STANSJB08L, RF2TY2421STANSJB10417, RF2TY2421STANSJB1041L, RF2TY2421STANSJB10L, RF2TY2421STANSJN00417, RF2TY2421STANSJN0041L, RF2TY2421STANSJN00L
63-101978-01	Machine Screw, 1/4-20 x 1 in.	2		All models
AE-103219-01	Middle Brace Cabinet	1		RF2TY2421STANSJB03417, RF2TY2421STANSJB0341L, RF2TY2421STANSJB03L, RF2TY2421STANSJB05417, RF2TY2421STANSJB0541L, RF2TY2421STANSJB05L, RF2TY2421STANSJB08417, RF2TY2421STANSJB0841L, RF2TY2421STANSJB08L, RF2TY2421STANSJB10417, RF2TY2421STANSJB1041L, RF2TY2421STANSJB10L, RF2TY2421STANSJN00417, RF2TY2421STANSJN0041L, RF2TY2421STANSJN00L
AE-103105-01	Mounting Bracket Cabinet	1		RF2TY2421STANSJB10
AE-103105-02	Mounting Bracket Wall	1		RF2TY2421STANSJB10
RCHY2421STASVU	S-Coil TXV Vertical Only Uncased R-454B	1		

Part No.	Description	Qty	Replaced By	Fits Models
63-22338-05	Screw	1		All models
63-22153-11	Screws - Sheet Metal. 8-18 x 3/4 in.	1		All models
63-22153-05	Sheet Metal Screw, 8-18 x 3/8 in.	1		All models
63-24368-03	Sheet Metal Screw, 8-18 x 1/2 in.	1		RF2TY2421STANSJB03417, RF2TY2421STANSJB0341L, RF2TY2421STANSJB03L, RF2TY2421STANSJB05417, RF2TY2421STANSJB0541L, RF2TY2421STANSJB05L, RF2TY2421STANSJB08417, RF2TY2421STANSJB0841L, RF2TY2421STANSJB08L, RF2TY2421STANSJB10417, RF2TY2421STANSJB1041L, RF2TY2421STANSJB10L, RF2TY3624STANSJB03417, RF2TY3624STANSJB0341L, RF2TY3624STANSJB03L, RF2TY3624STANSJB05417, RF2TY3624STANSJB0541L, RF2TY3624STANSJB05L, RF2TY3624STANSJB08417, RF2TY3624STANSJB0841L, RF2TY3624STANSJB08L, RF2TY3624STANSJB10417, RF2TY3624STANSJB1041L, RF2TY3624STANSJB10L
63-24368-01	Sheet Metal Screw, 8-18 x 1/4 in.	1		RF2TY2421STANSJB03417, RF2TY2421STANSJB05417, RF2TY2421STANSJB08417, RF2TY2421STANSJB10417, RF2TY2421STANSJN00417, RF2TY3624STANSJB03417, RF2TY3624STANSJB05417, RF2TY3624STANSJB08417, RF2TY3624STANSJB10417, RF2TY3624STANSJN00417
10-104877-01	Shield - Drain	1		All models
45-18515-01	Snap-In Bushing - Conductor Protection	1		All models
63-22429-01	Stainless Steel Sheet Metal Screw, 8-18 x 1/2 in.	1/2		All models
63-22487-01	Thread-Forming Screw, 10-32 x 1/2 in.	1		All models
63-100404-02	Thread-Forming Screw, 12-24 x 7/16 in.	1		All models
AE-103095-15	Top Panel	1		RF2TY2421STANSJB03417, RF2TY2421STANSJB0341L, RF2TY2421STANSJB03L, RF2TY2421STANSJB05417, RF2TY2421STANSJB0541L, RF2TY2421STANSJB05L, RF2TY2421STANSJB08417, RF2TY2421STANSJB0841L, RF2TY2421STANSJB08L, RF2TY2421STANSJB10417, RF2TY2421STANSJB1041L, RF2TY2421STANSJB10L, RF2TY2421STANSJN00417, RF2TY2421STANSJN0041L, RF2TY2421STANSJN00L
56-19008-01	Tube Plug	1	OBSOLETE	All models
63-26198-02	Washer - Flat (Fender)	2		All models
64-17606-01	Wire & Cable Tie - Nylon Black - 8 in.	1		All models