# Rheem RGEAYB Package Unit Replacement Parts List

Parts list RP-RHM-RGEAYB | Updated Nov 2026 | 242 parts | 16 model numbers

Genuine Rheem OEM part numbers for the models listed below, compiled from Rheem Manufacturing's service parts catalog. Quantities are per unit. Where Rheem has replaced a part number, the current number is shown under Replaced By. Always confirm the full model and serial number of the unit before ordering.

## Models covered

RGEAYB024AJT06XNA, RGEAYB024AJT06XNAAJA, RGEAYB030AJT06XNA, RGEAYB030AJT06XNAAJA, RGEAYB036AJT06XNA, RGEAYB036AJT06XNAAJA, RGEAYB036AJT08XNA, RGEAYB036AJT08XNAAJA, RGEAYB042AJT08XNA, RGEAYB042AJT08XNAAJA, RGEAYB048AJT08XNA, RGEAYB048AJT08XNAAJA, RGEAYB048AJT10XNA, RGEAYB048AJT10XNAAJA, RGEAYB060AJT10XNA, RGEAYB060AJT10XNAAJA

## RGEAYB parts breakdown: ADS-105127-18A 10 Outdoor Coil 2-2.5 Ton

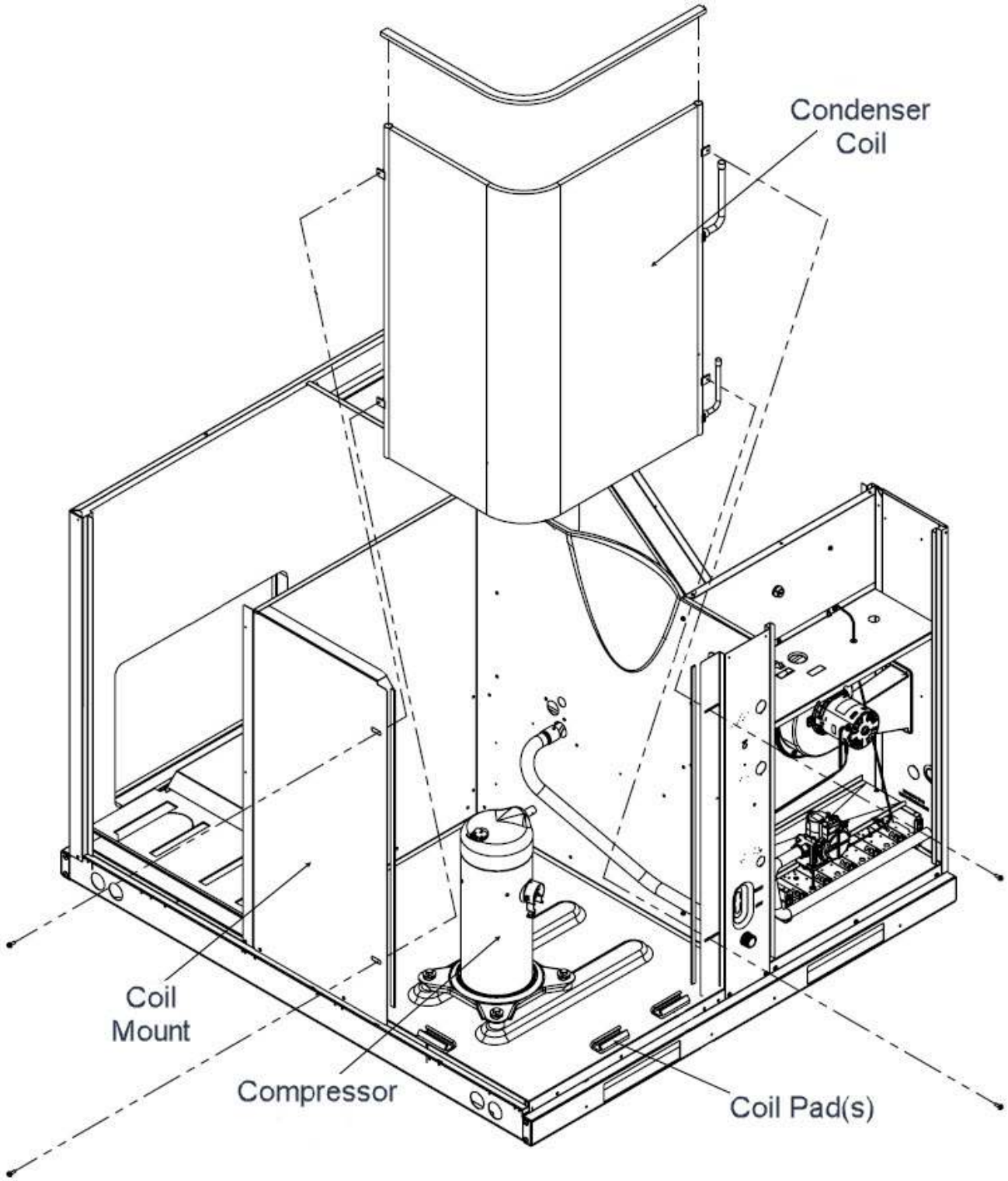

## RGEAYB parts breakdown: ADS-105127-18A 11 Outdoor Coil 3-5 Ton

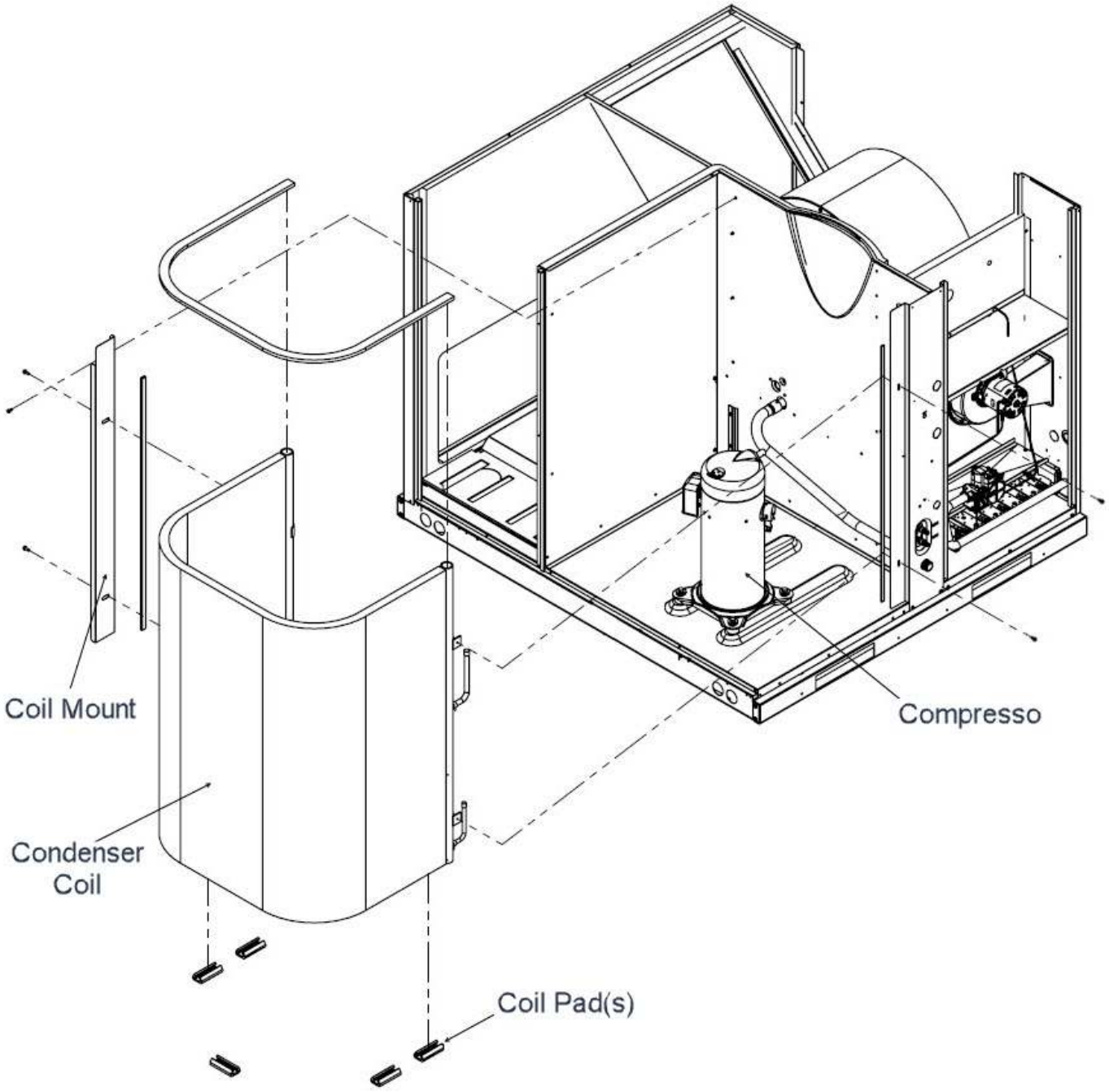

**RGEAYB parts breakdown: ADS-105127-18A 12 Coil Frames 2C Drainpan**

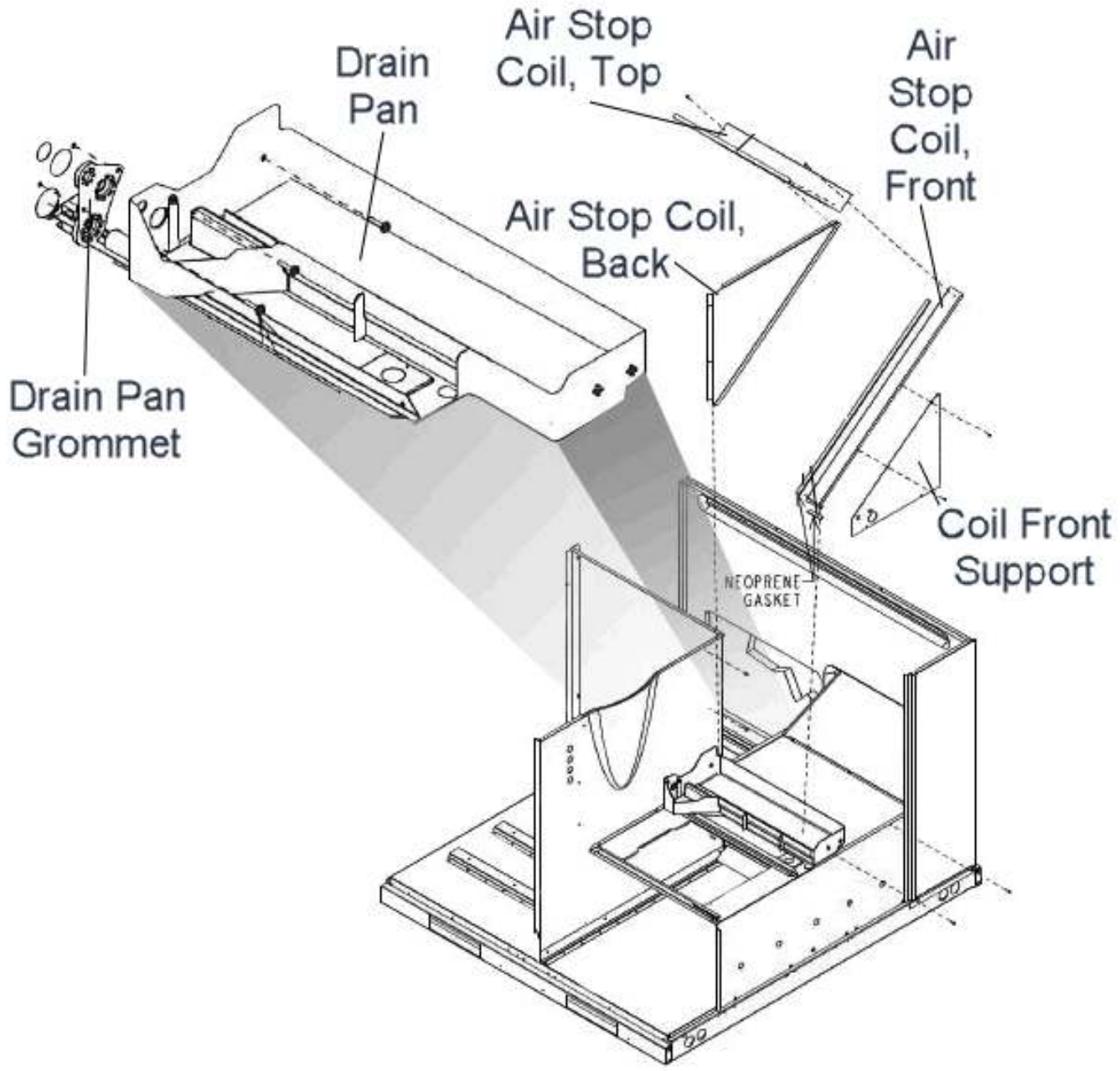

## RGEAYB parts breakdown: ADS-105127-18A 13 Compressor View

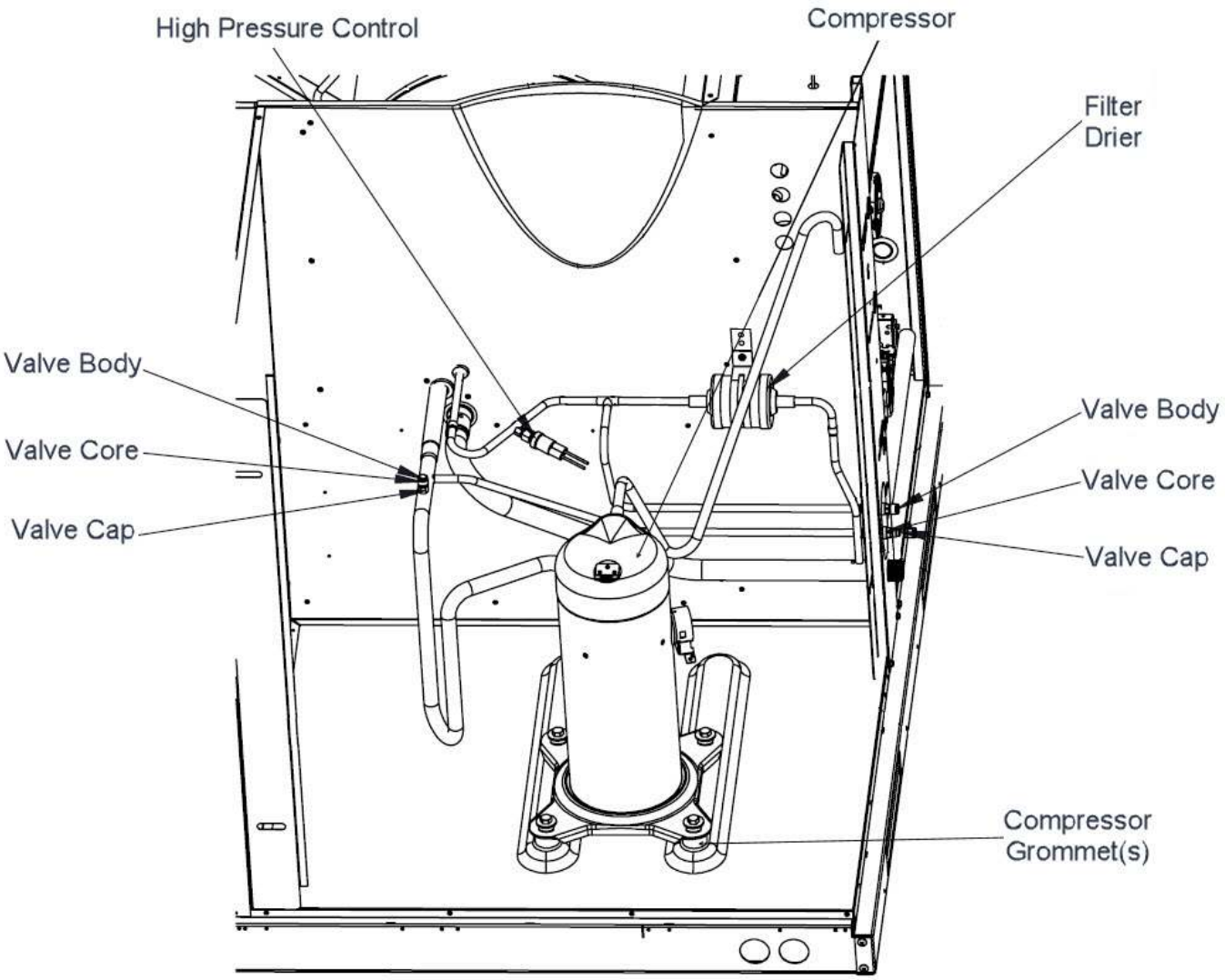

## RGEAYB parts breakdown: ADS-105127-18A 14 Collector Box 2C Heat Exchanger

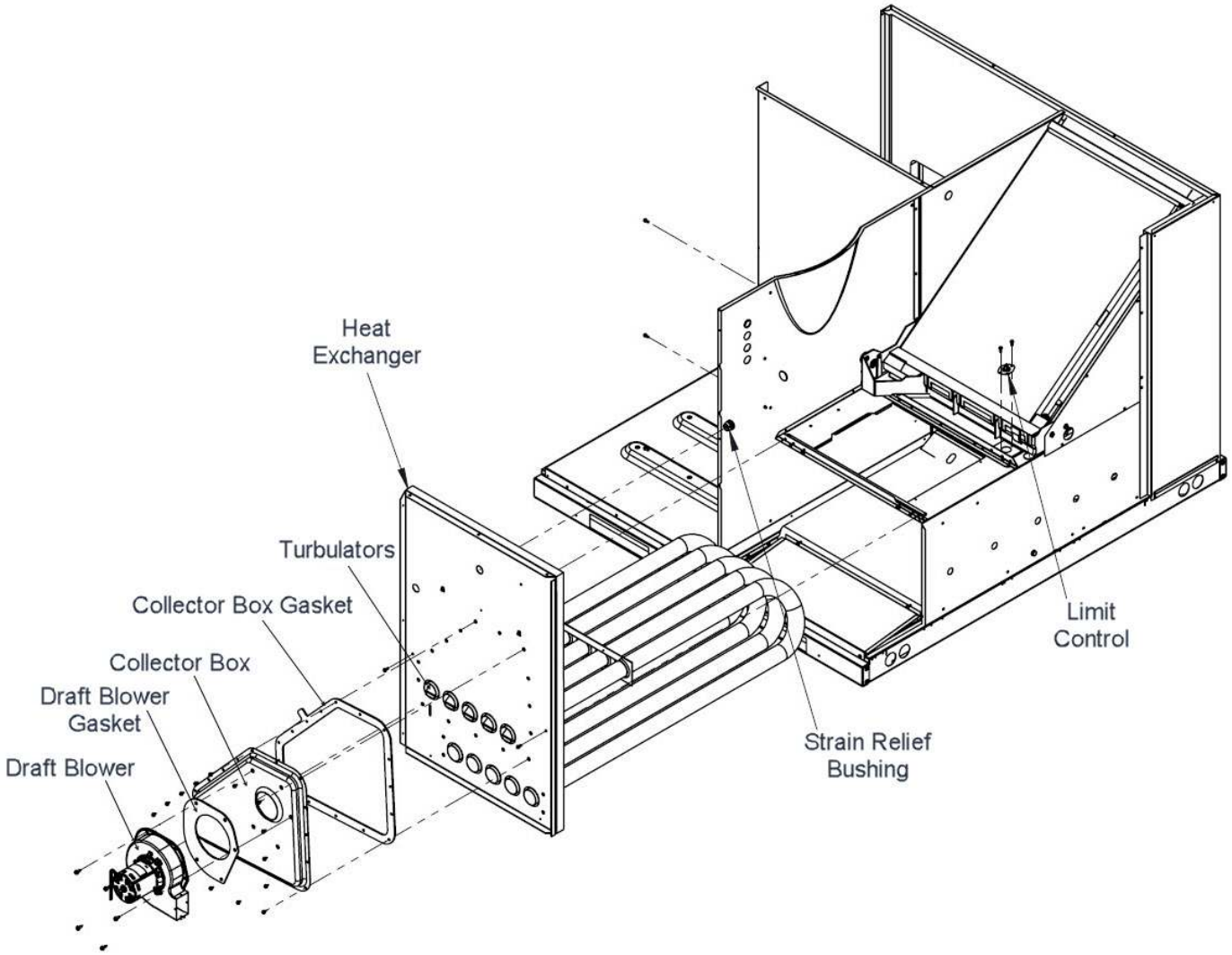

## RGEAYB parts breakdown: ADS-105127-18A 15 Lox Nox Heat Exchanger

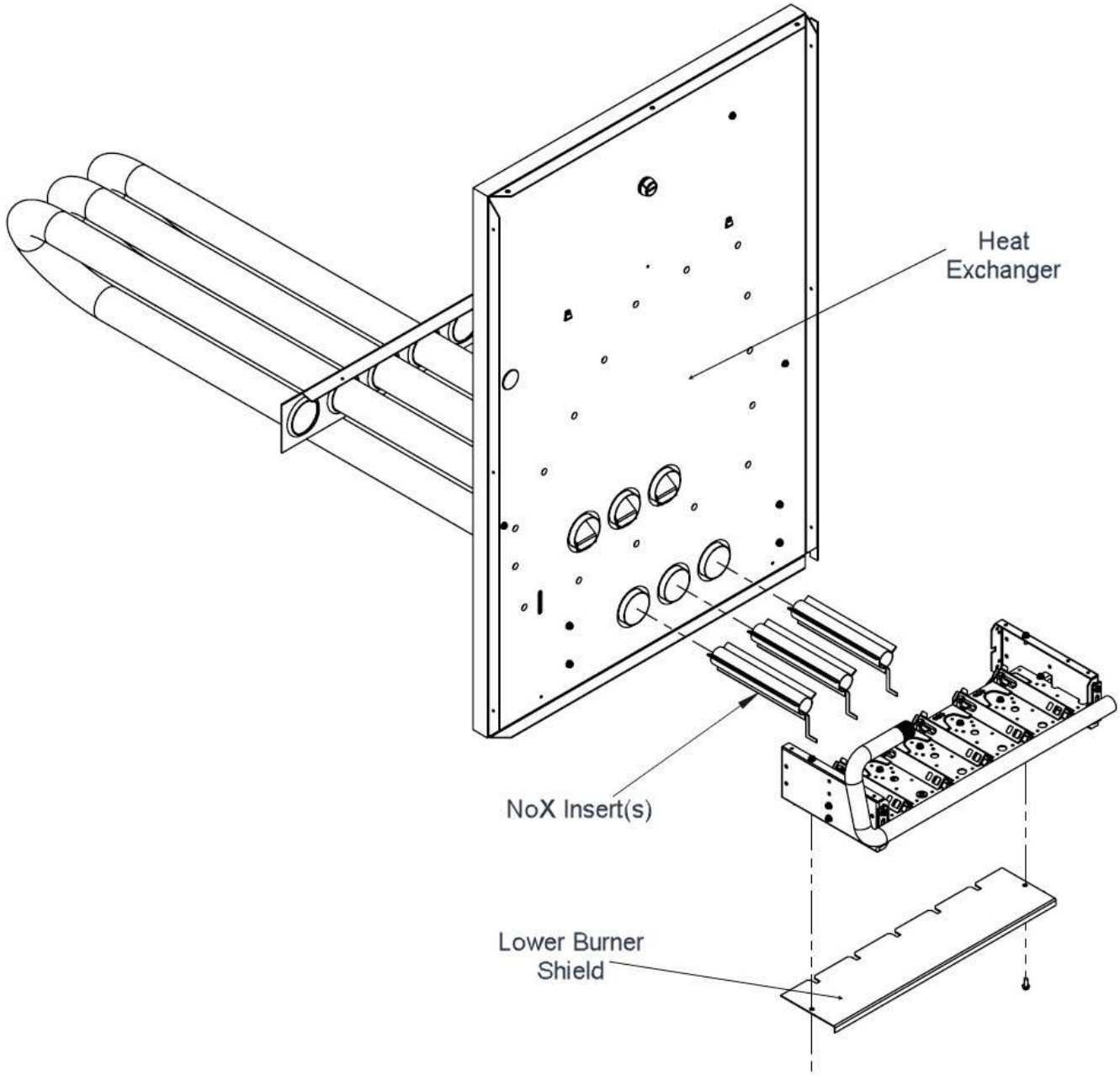

## RGEAYB parts breakdown: ADS-105127-18A 1 Exterior Cabinet 281 29

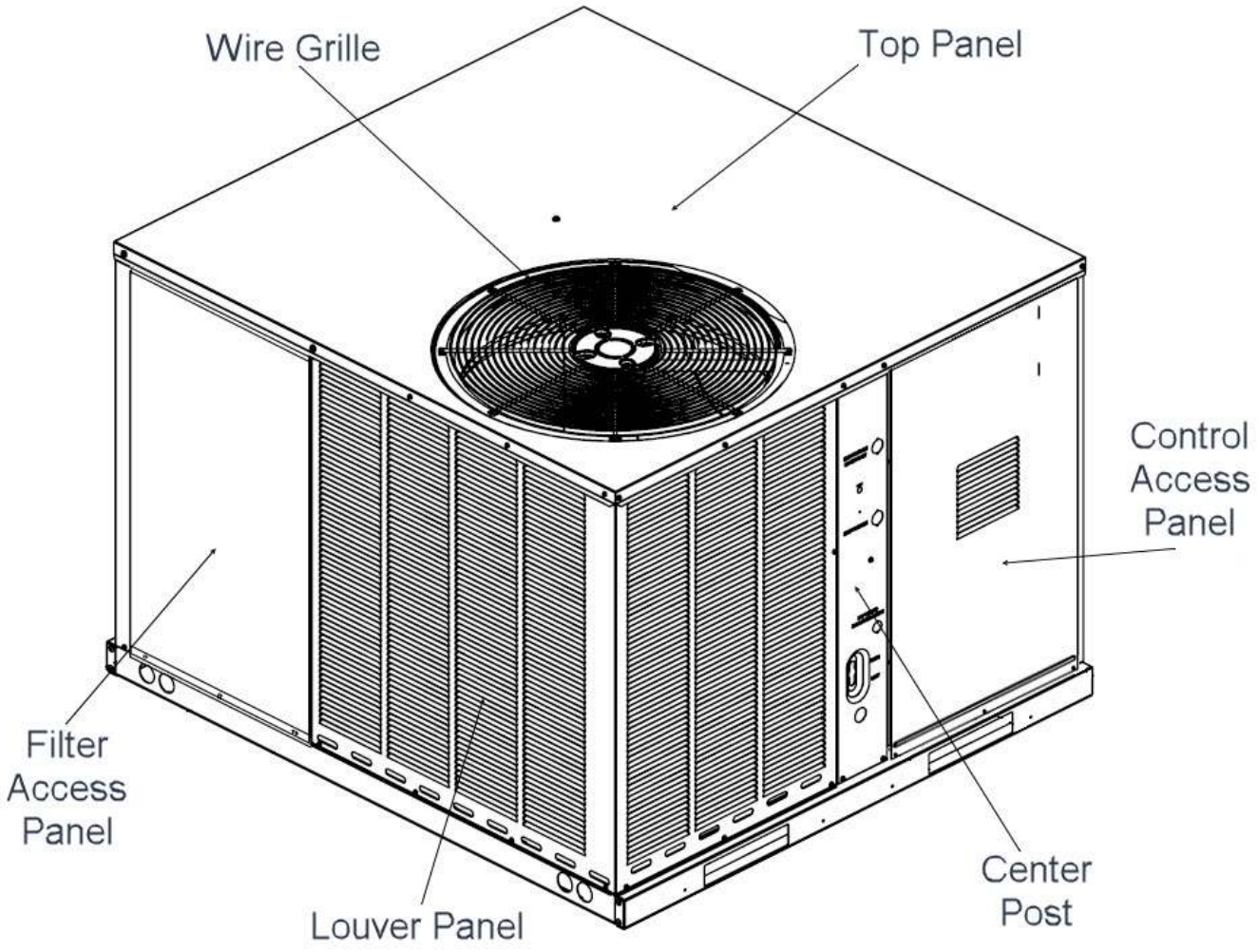

## RGEAYB parts breakdown: ADS-105127-18A 2 Exterior Cabinet 282 29

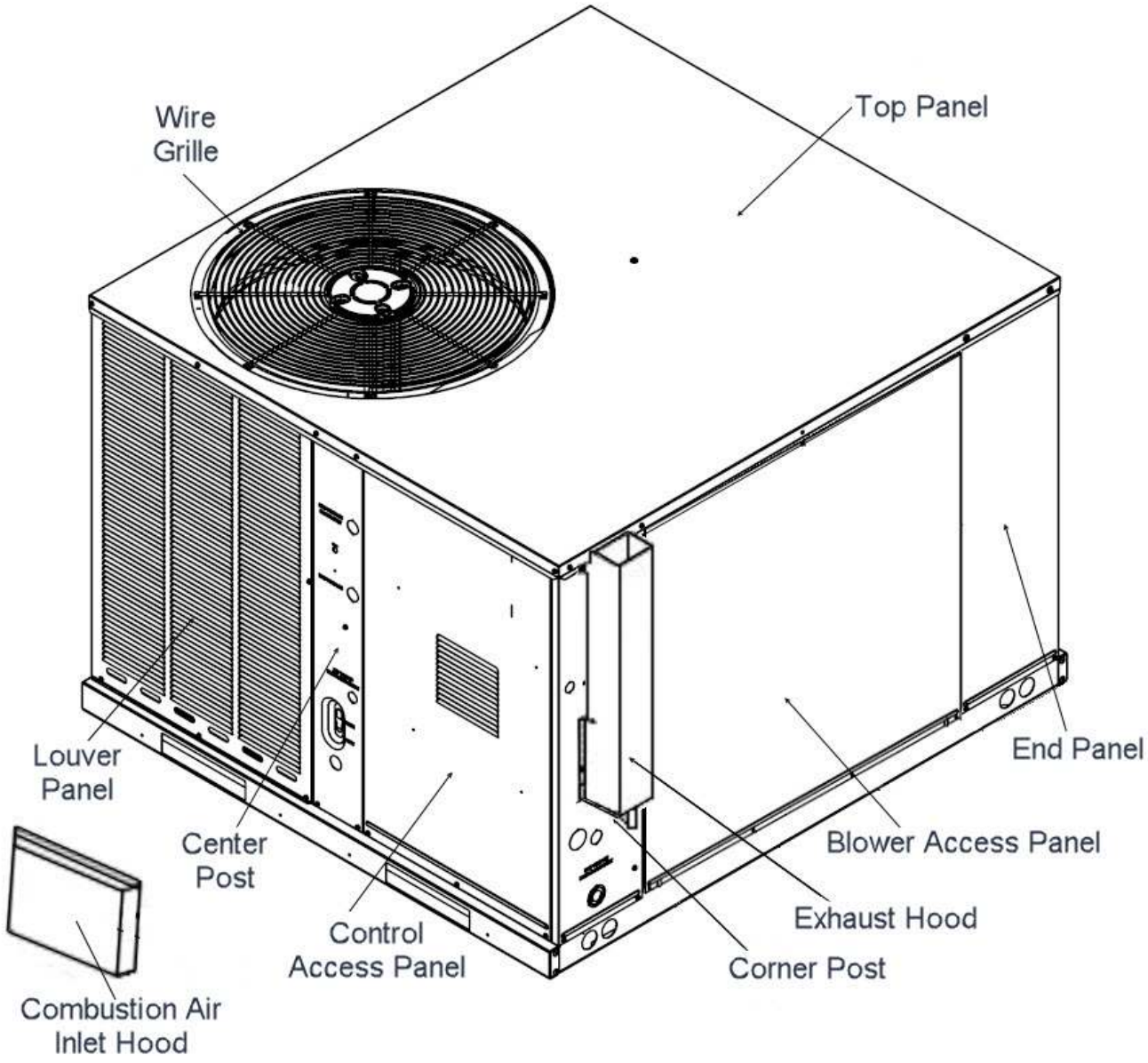

**RGEAYB parts breakdown: ADS-105127-18A 3 Internal View 281 29**

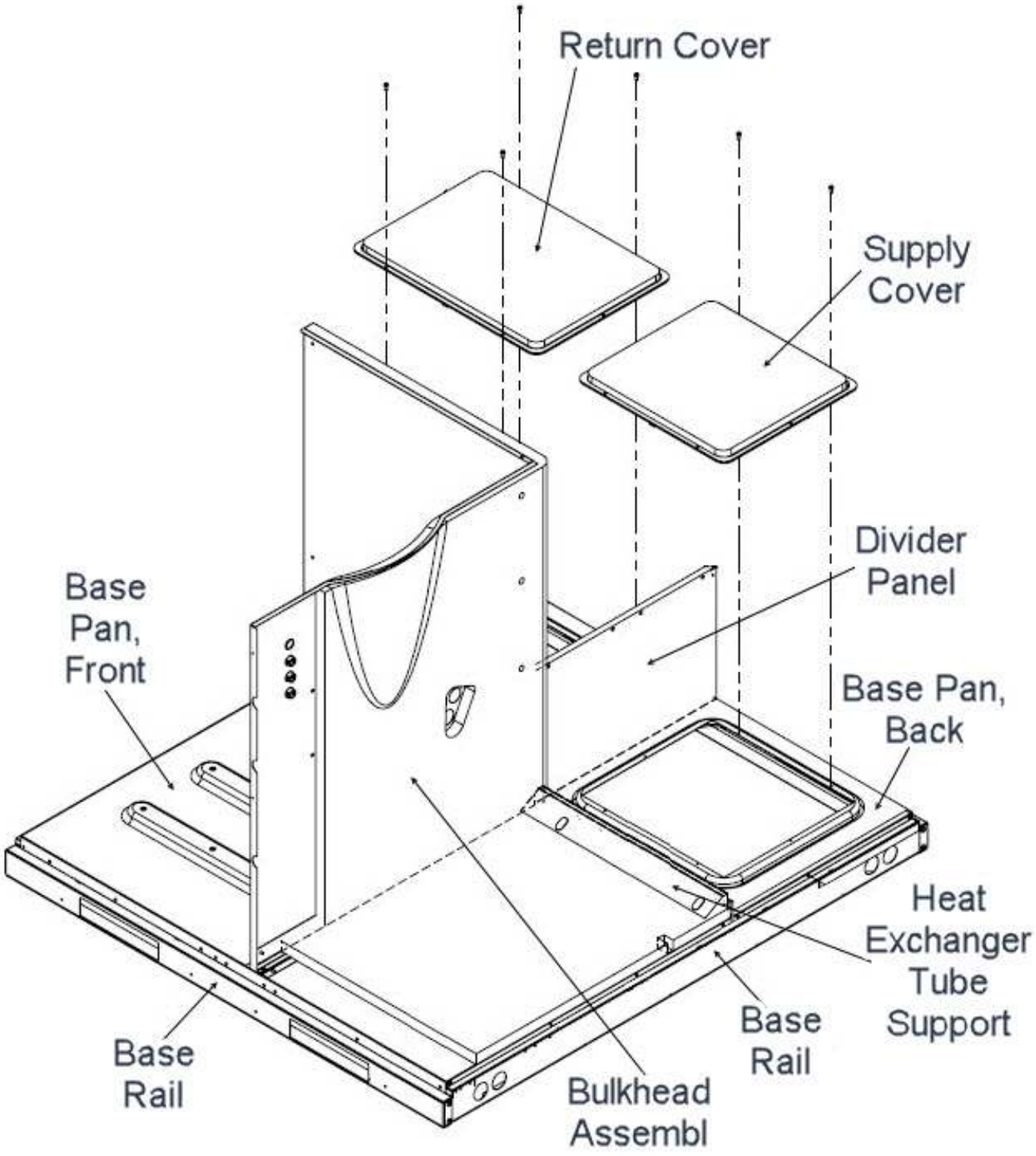

**RGEAYB parts breakdown: ADS-105127-18A 4 Internal View 282 29**

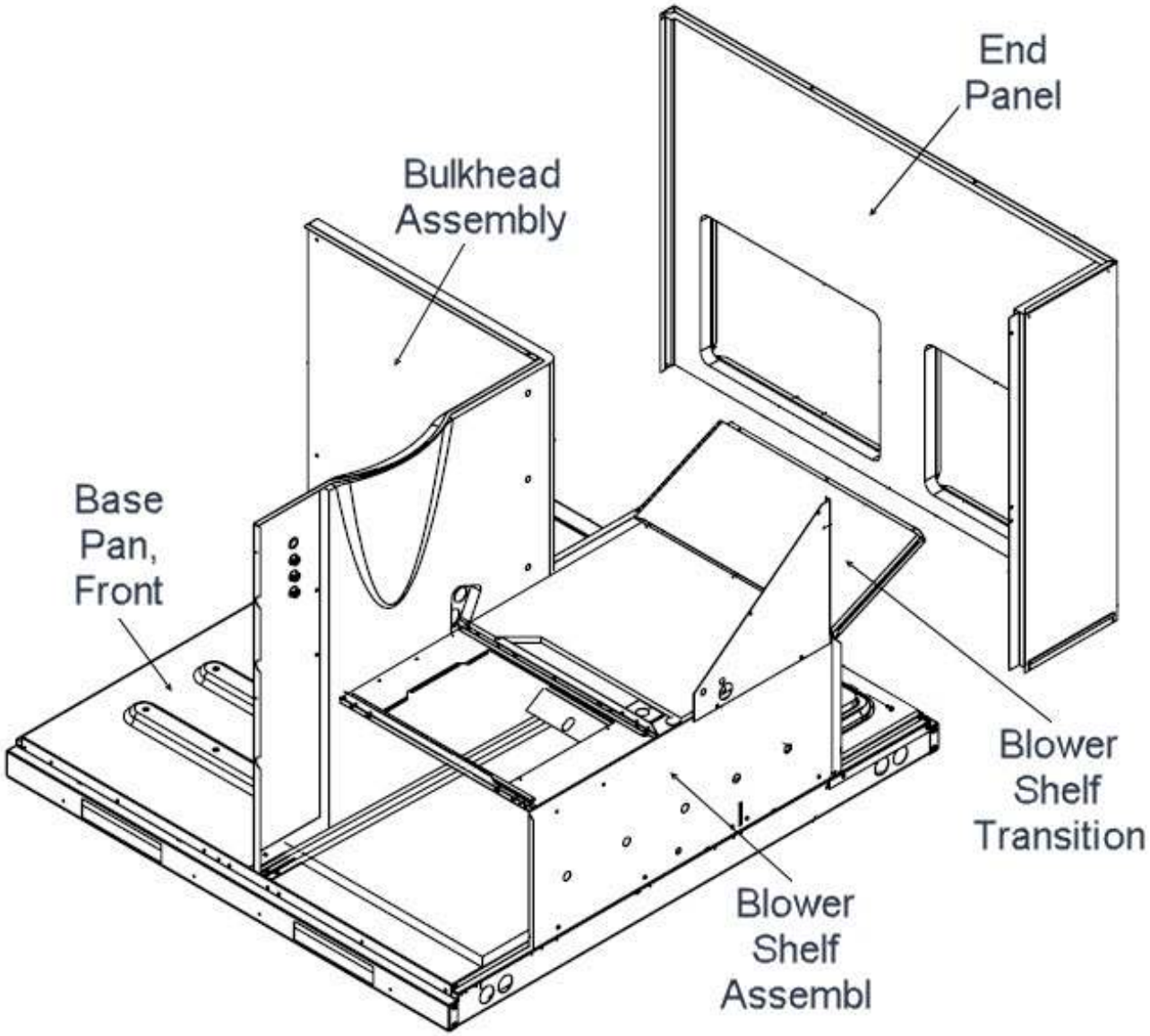

## RGEAYB parts breakdown: ADS-105127-18A 5 Internal View 283 29

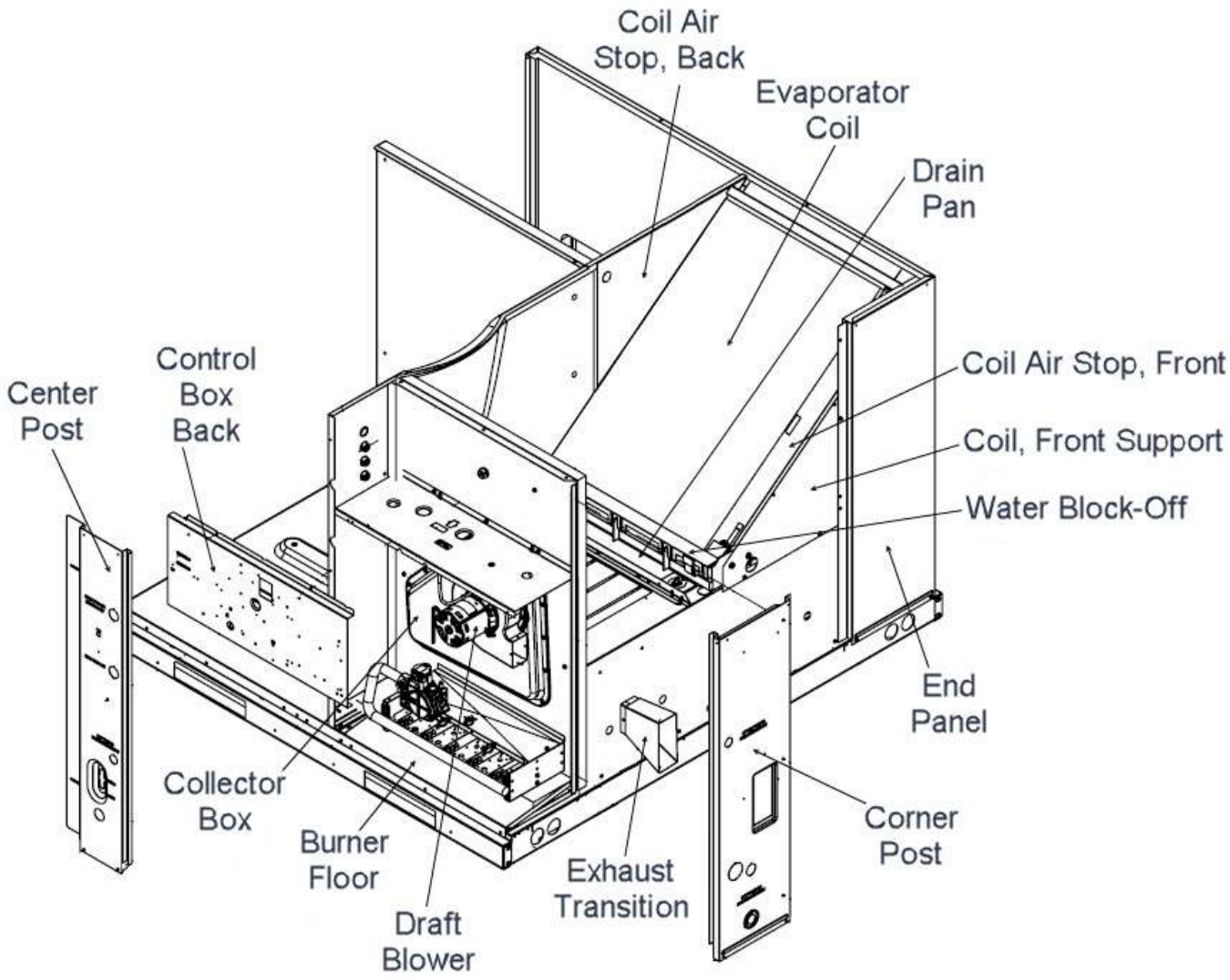

## RGEAYB parts breakdown: ADS-105127-18A 7 Control Panel

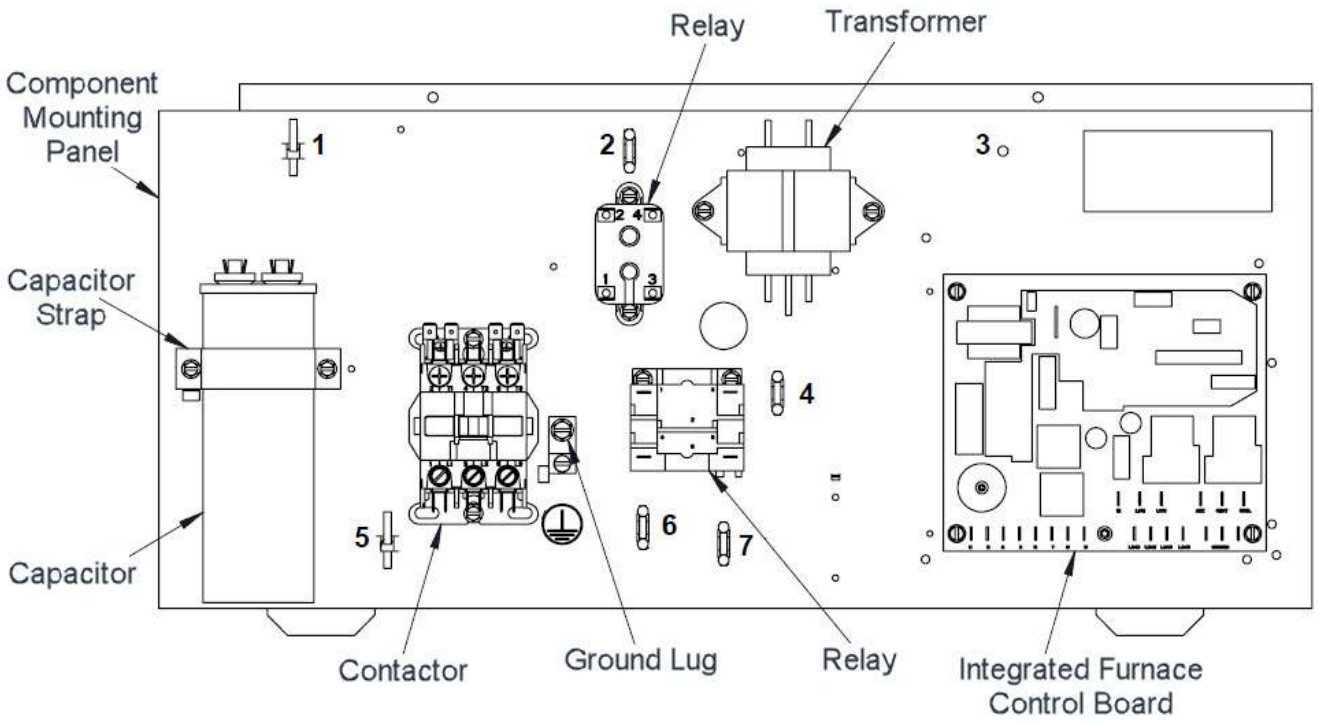

## RGEAYB parts breakdown: ADS-105127-18A 8 Outdoor Fan

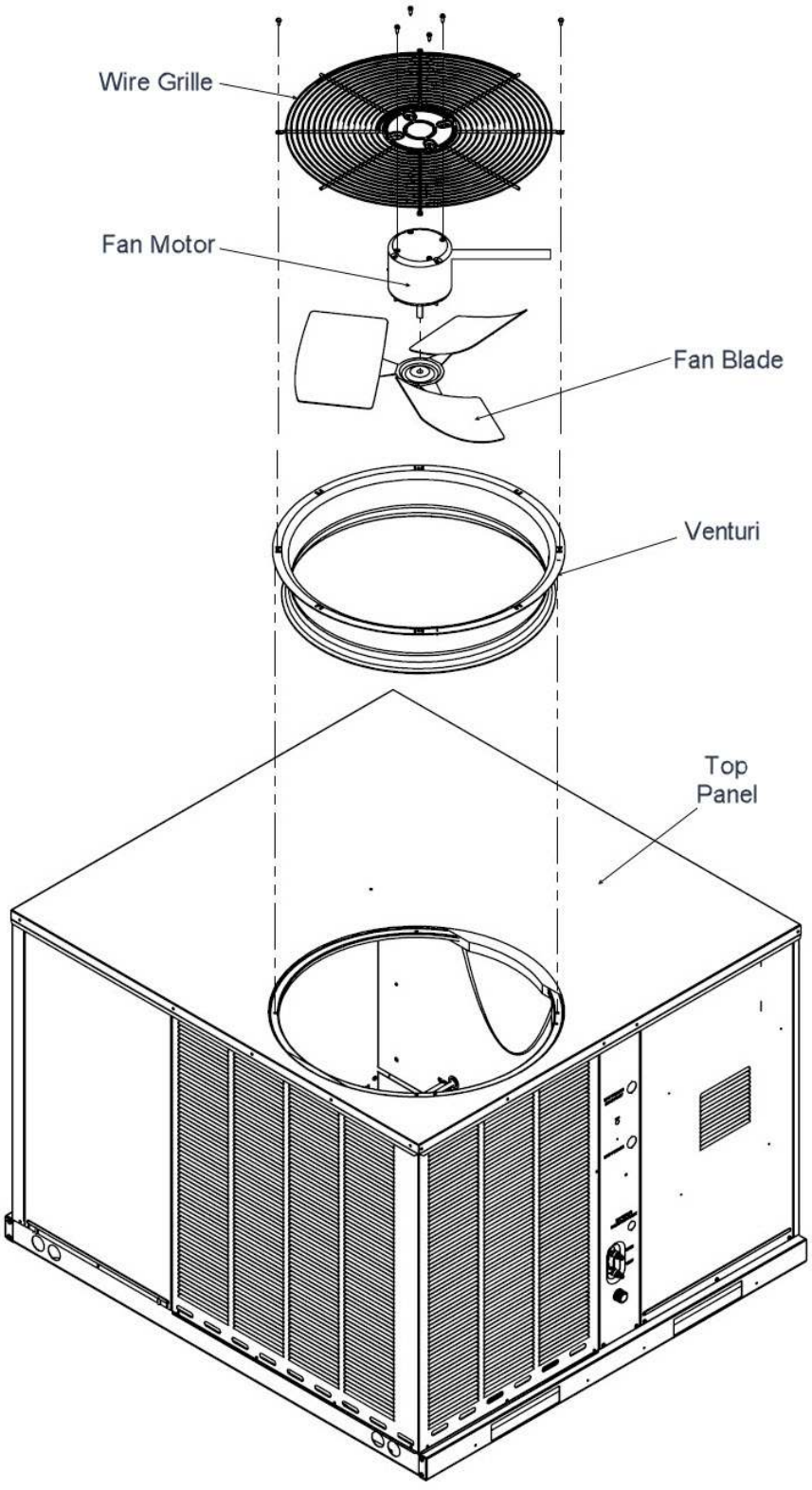

## RGEAYB parts breakdown: ADS-105127-18A 9 Blower Assembly

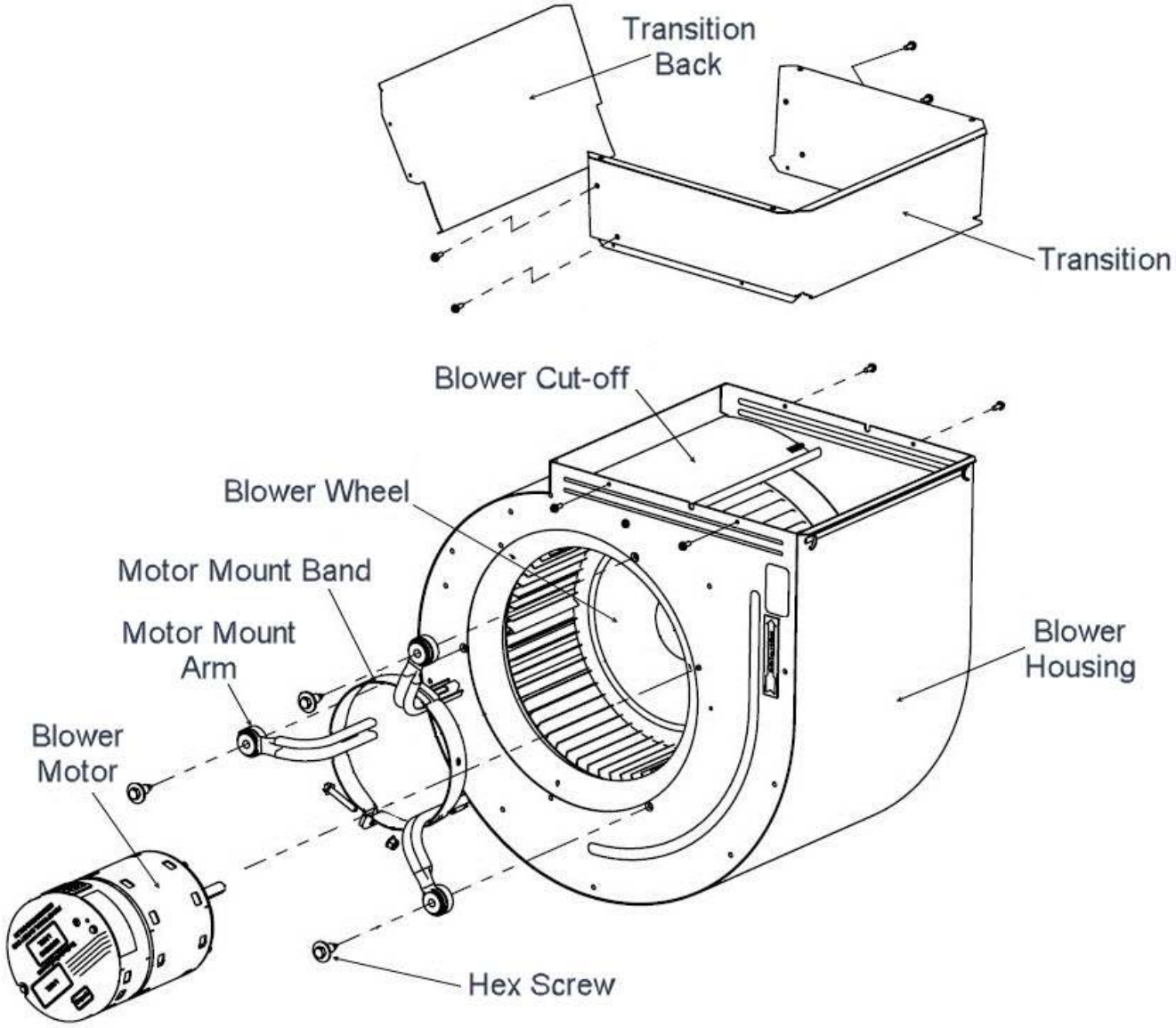

## RGEAYB parts breakdown: ADS-105127-19A 16 Heating Compartment

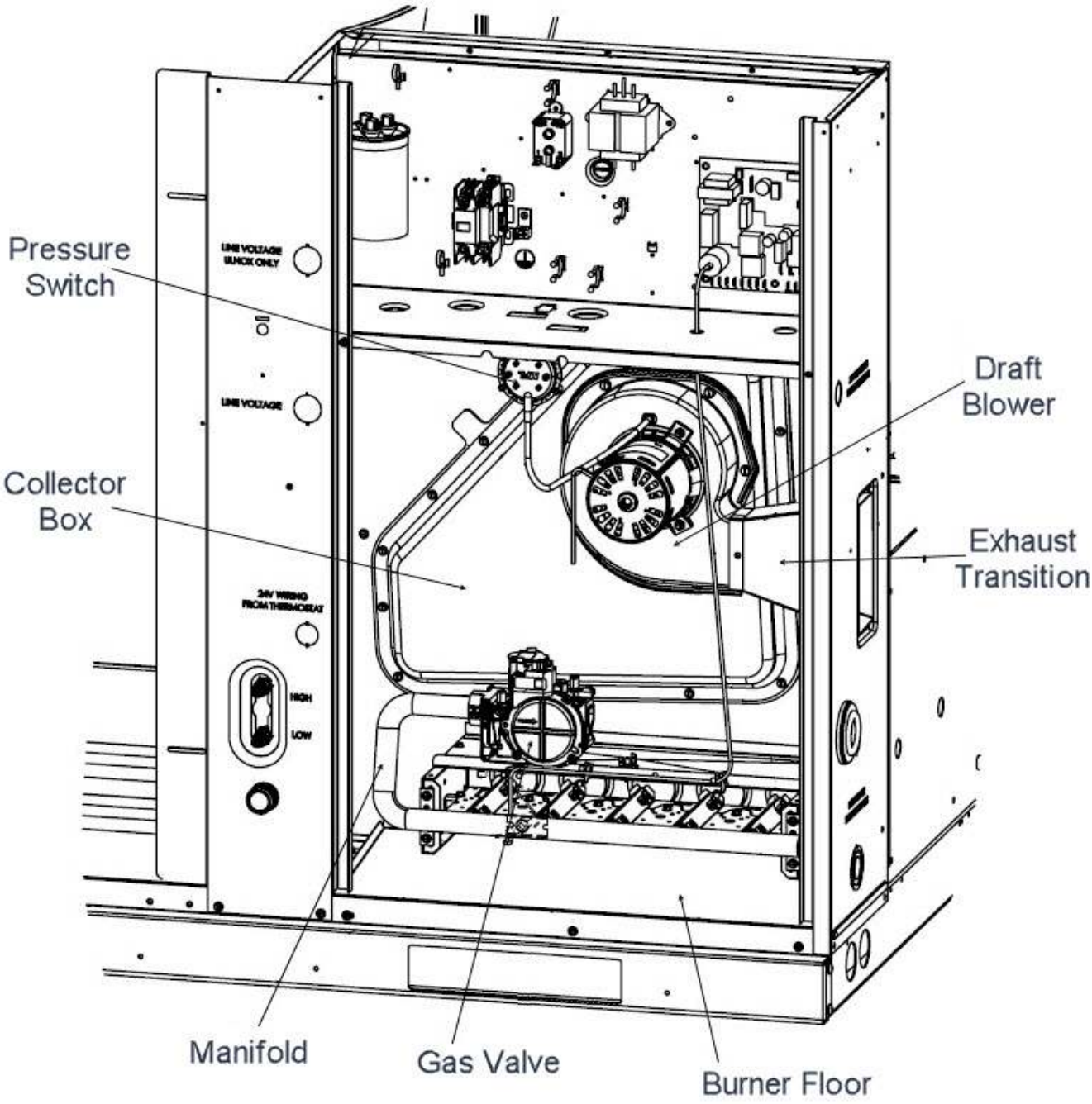

## RGEAYB parts breakdown: ADS-105127-19A 17 Burner Assembly

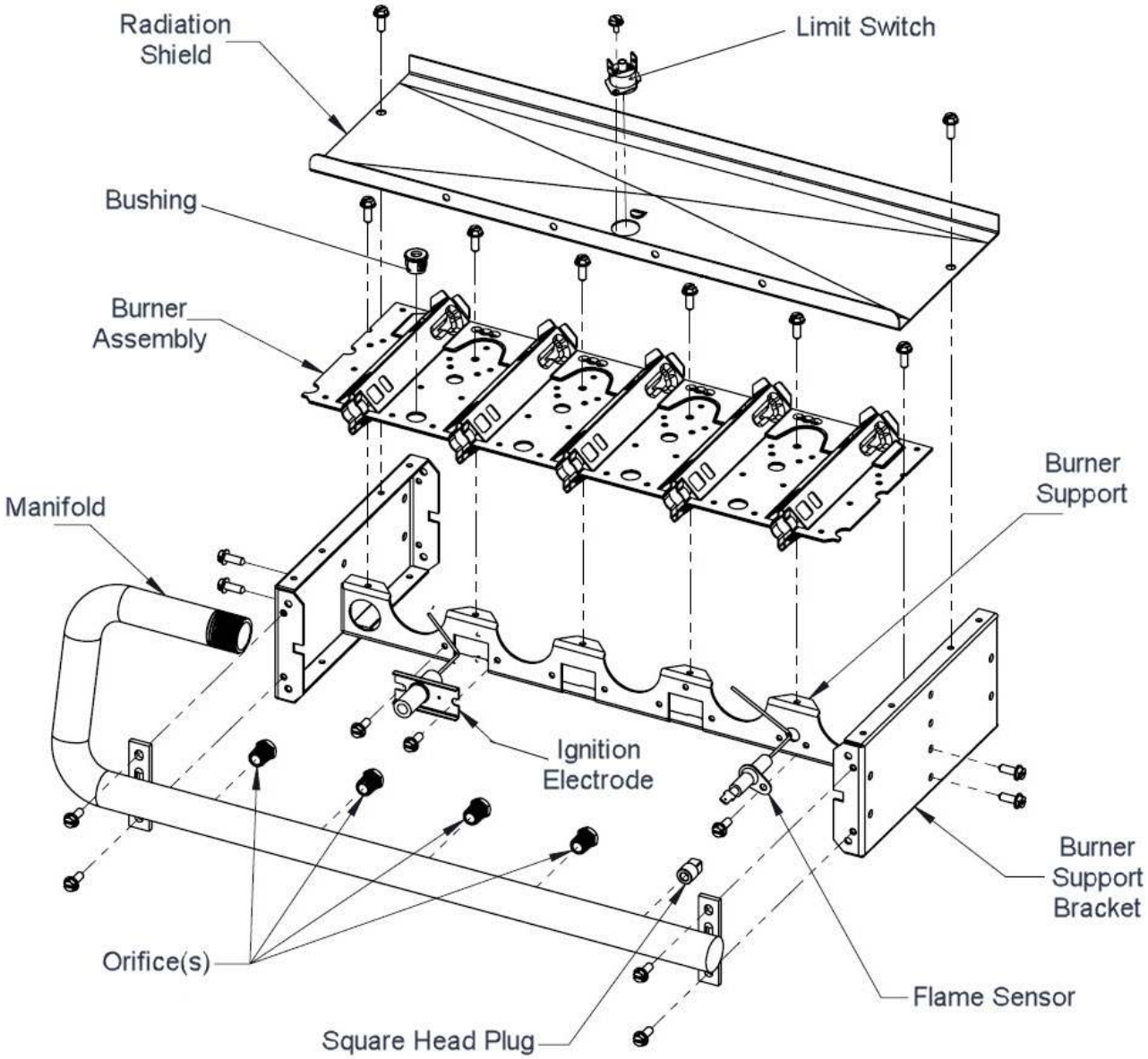

## RGEAYB parts breakdown: ADS-105127-19A 6 Bulkhead Wiring Bushings

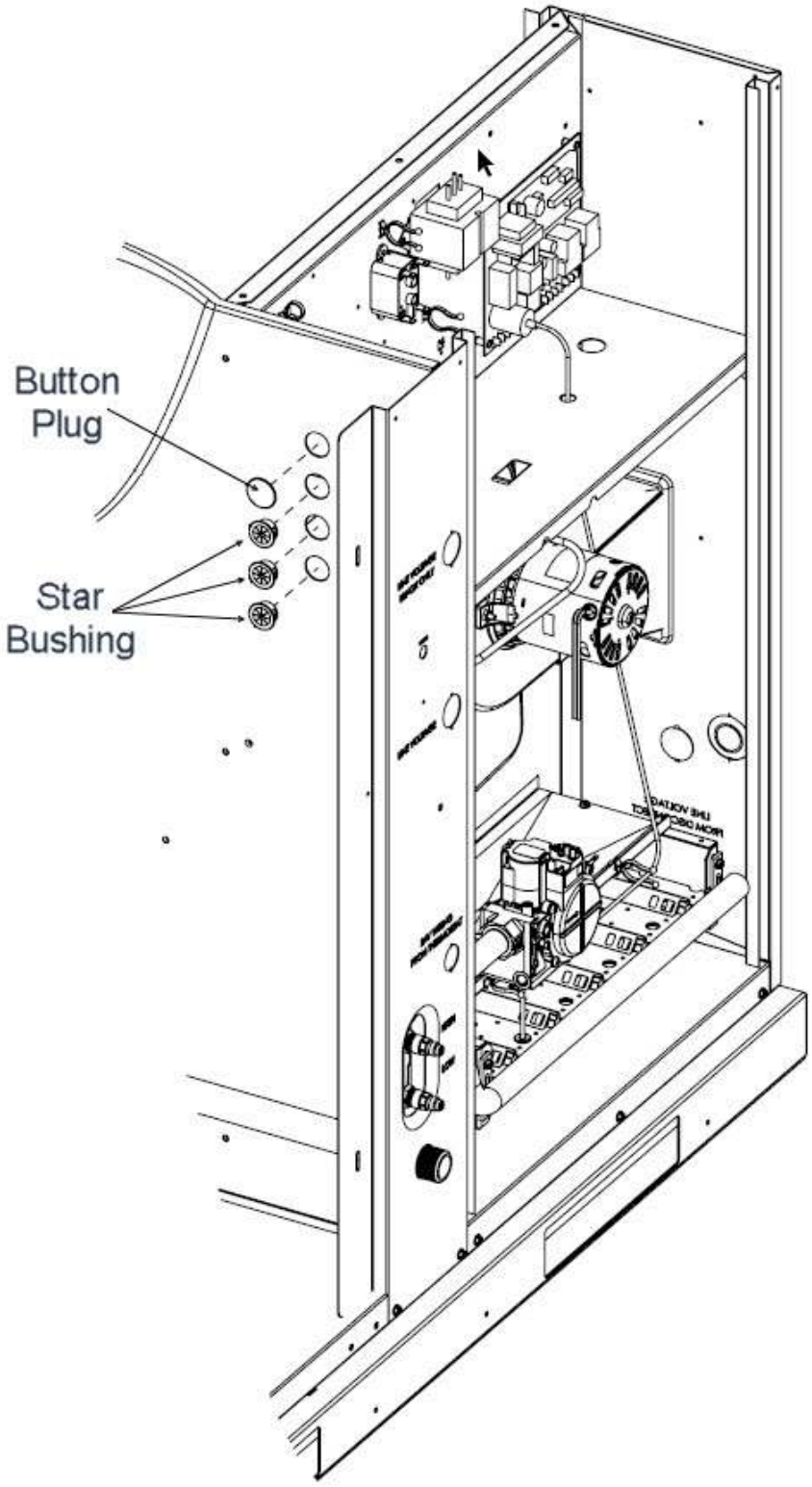

## RGEAYB parts breakdown: ADS-105127-19A 7 Control Panel

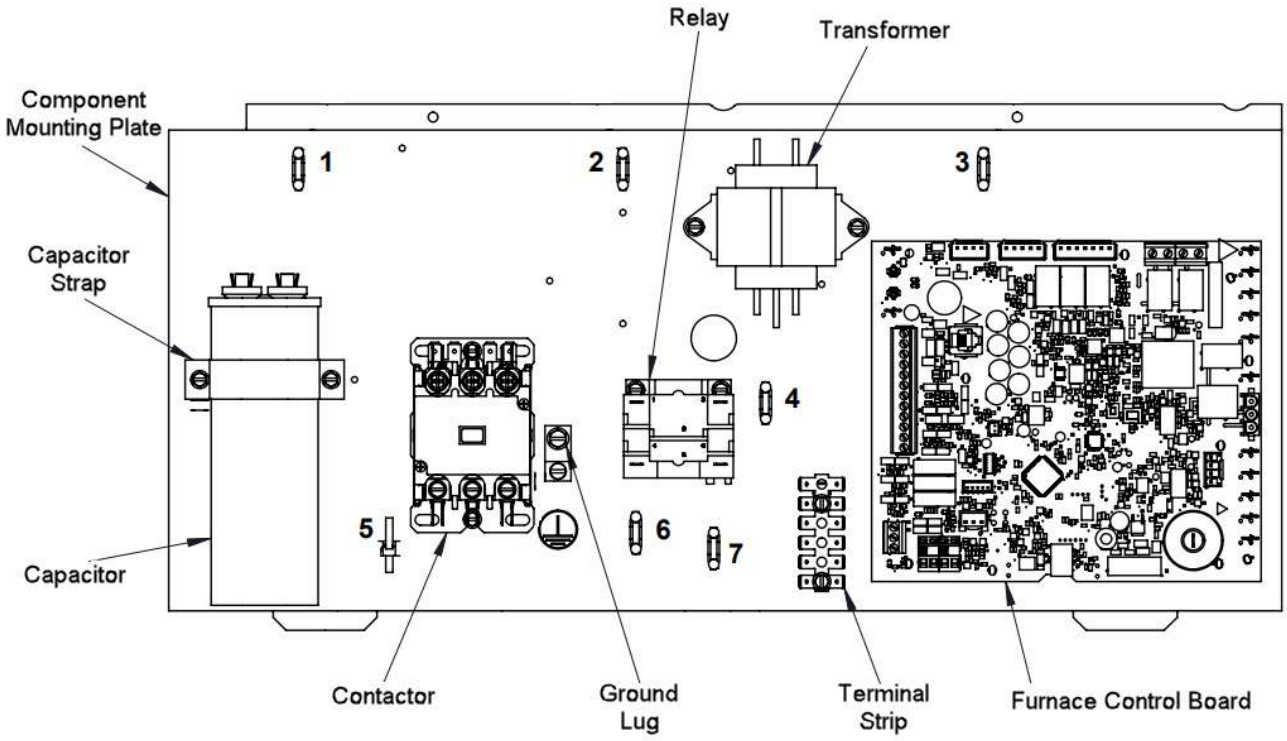

## RGEAYB parts breakdown: ADS-105128-18A 10 Outdoor Coil 2-2.5 Ton

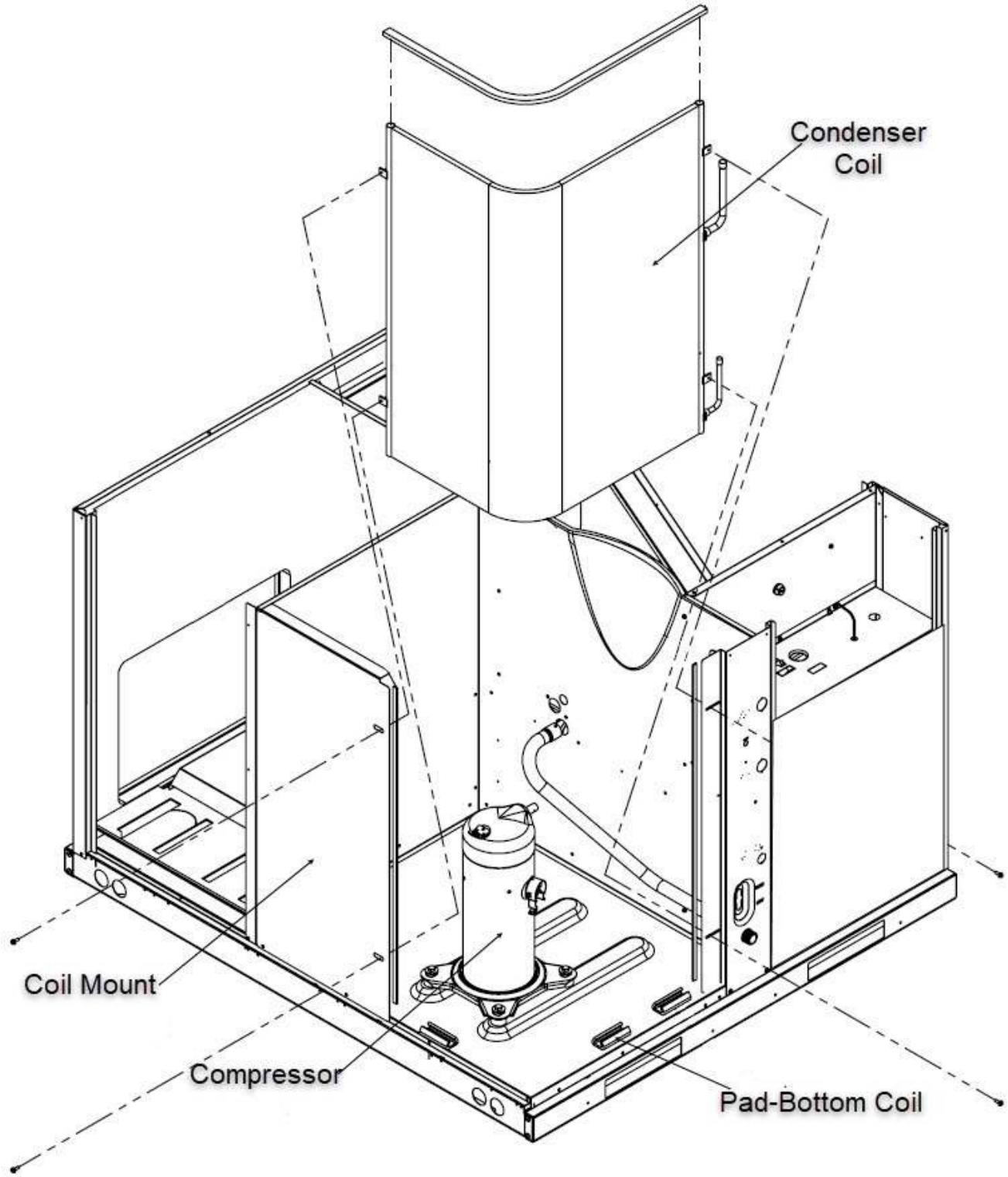

**RGEAYB parts breakdown: ADS-105128-18A 12 Coil Frames Drainpan.**

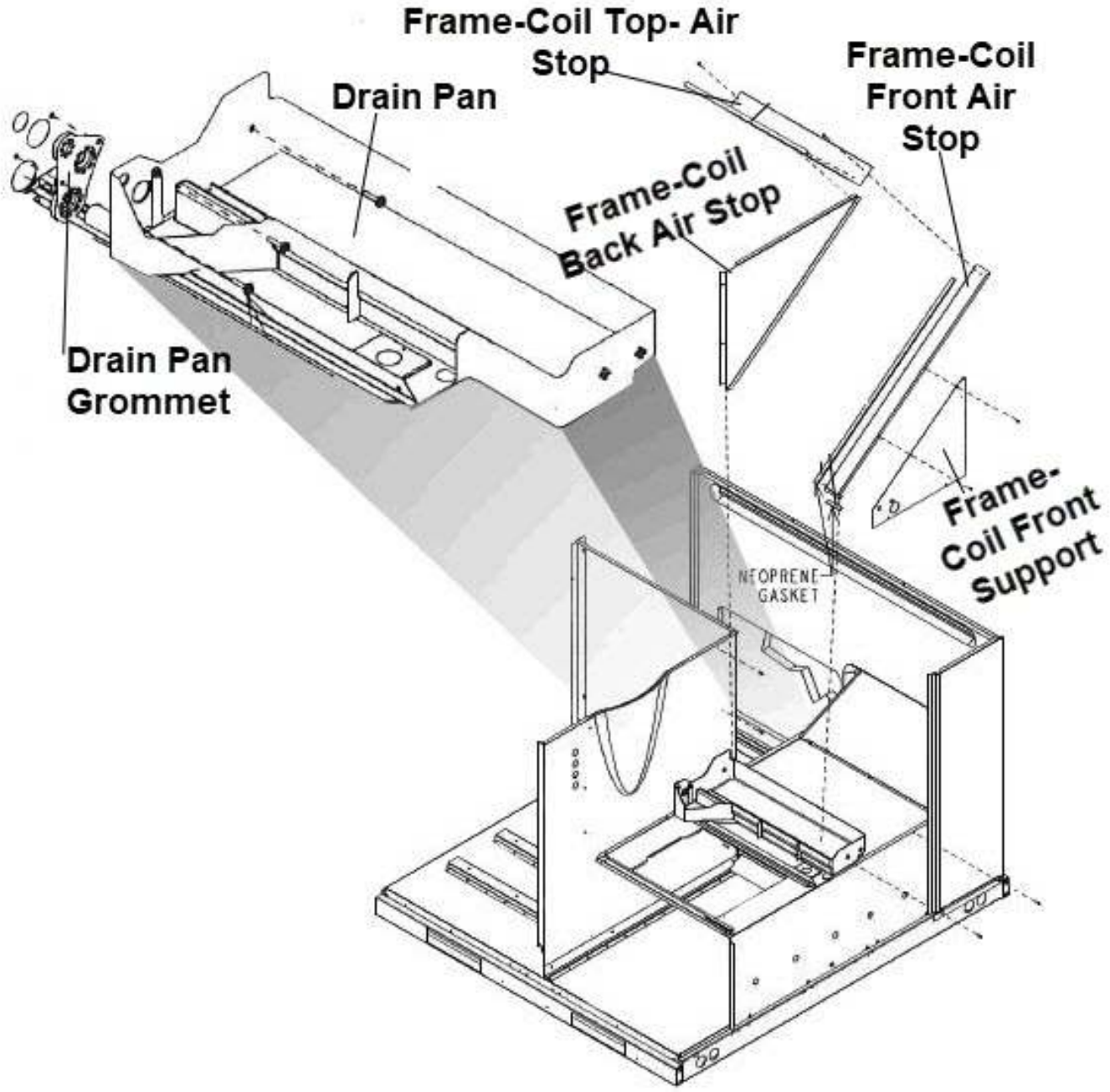

## RGEAYB parts breakdown: ADS-105128-18A 13 Compressor View

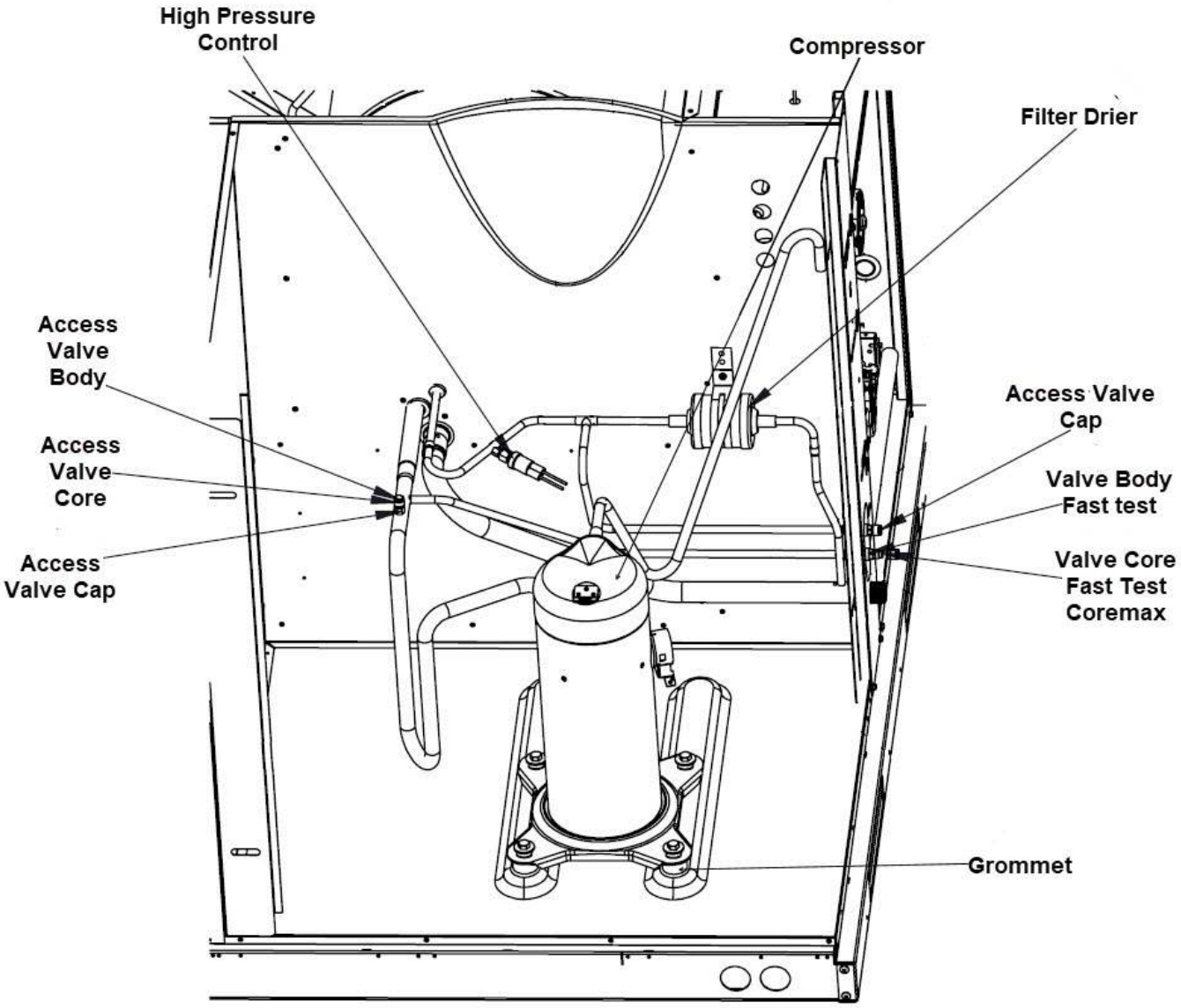

**RGEAYB parts breakdown: ADS-105128-18A 1 Exterior Cabinet**

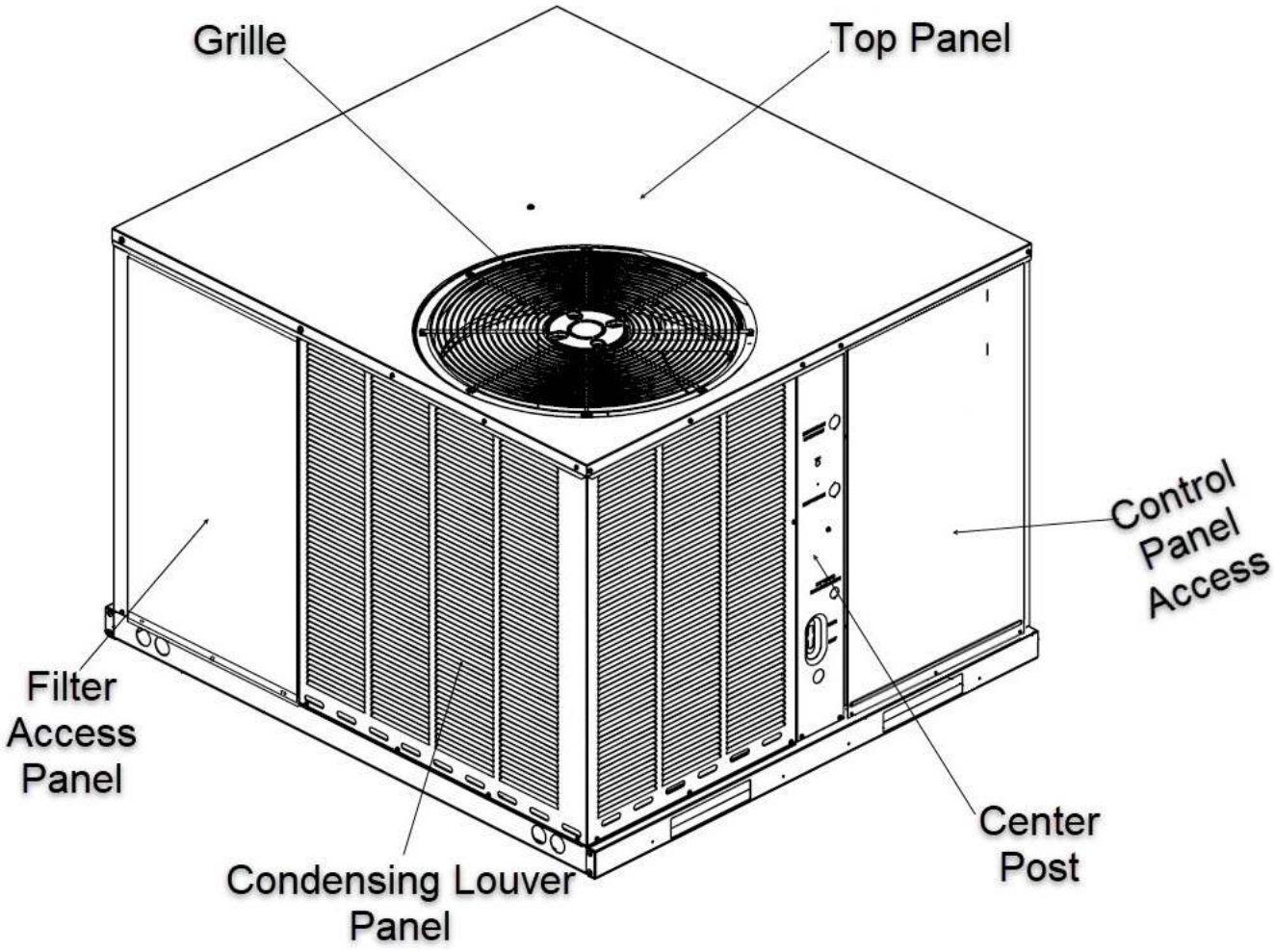

## RGEAYB parts breakdown: ADS-105128-18A 2 Exterior Cabinet

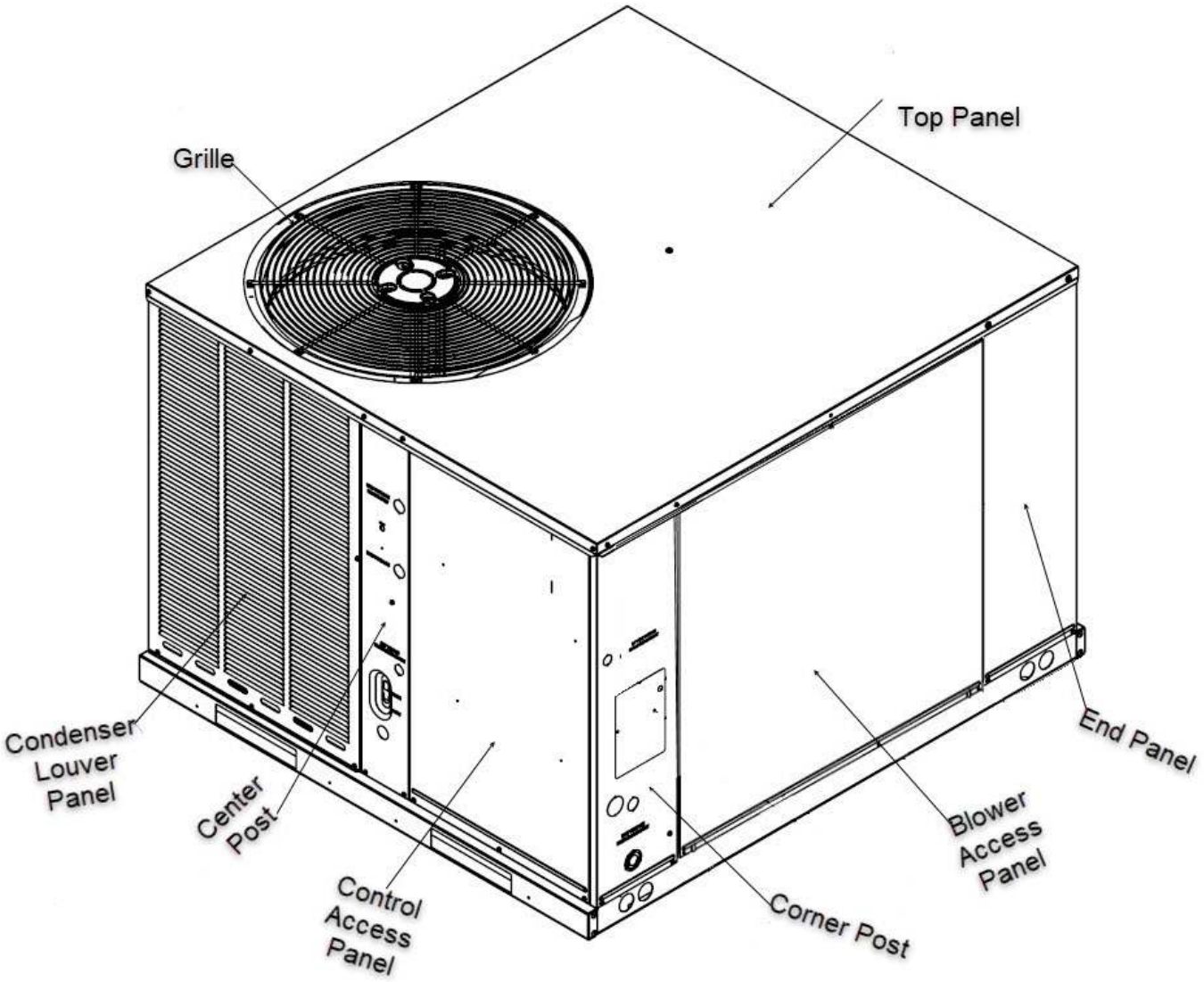

**RGEAYB parts breakdown: ADS-105128-18A 3 Internal View**

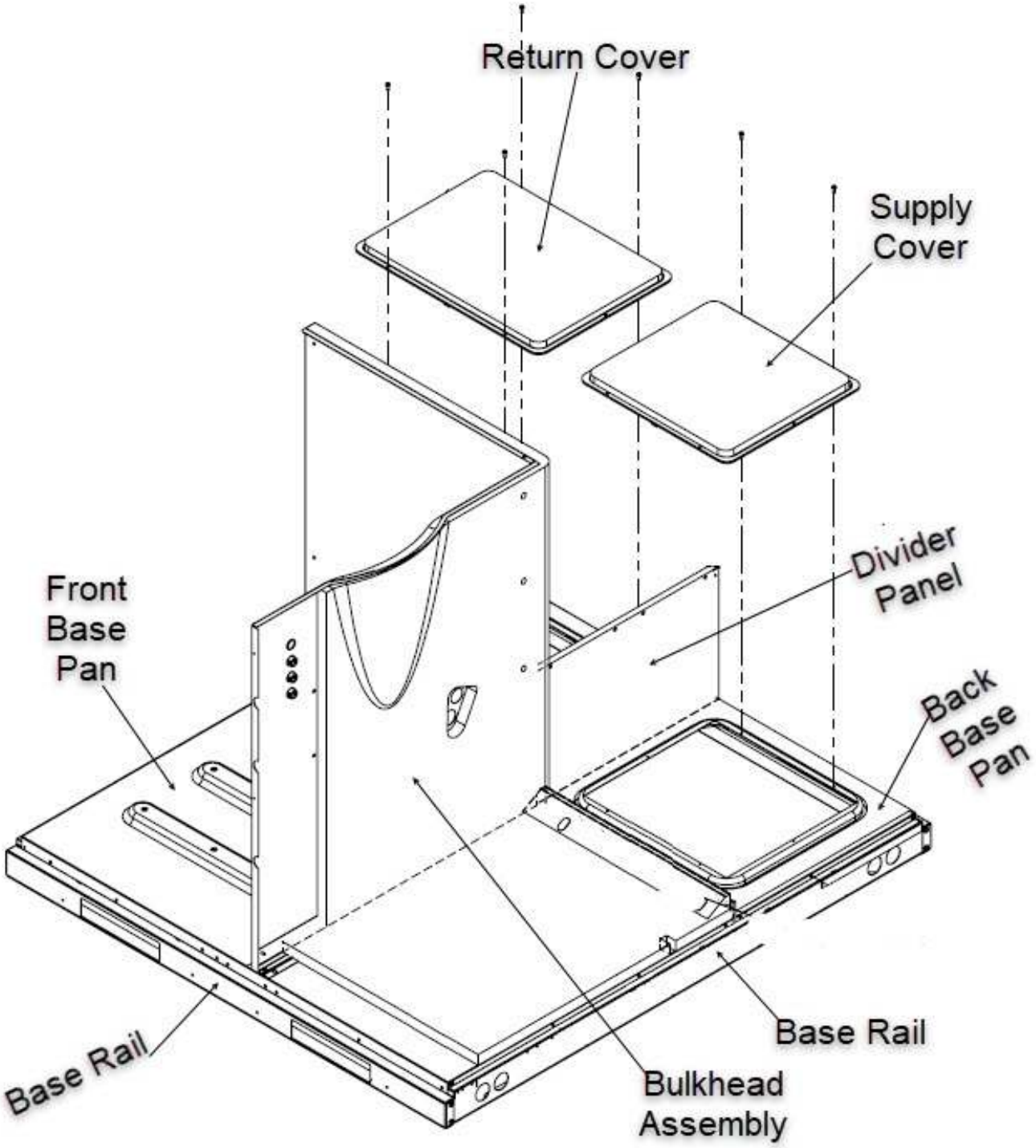

## RGEAYB parts breakdown: ADS-105128-18A 4 Internal View

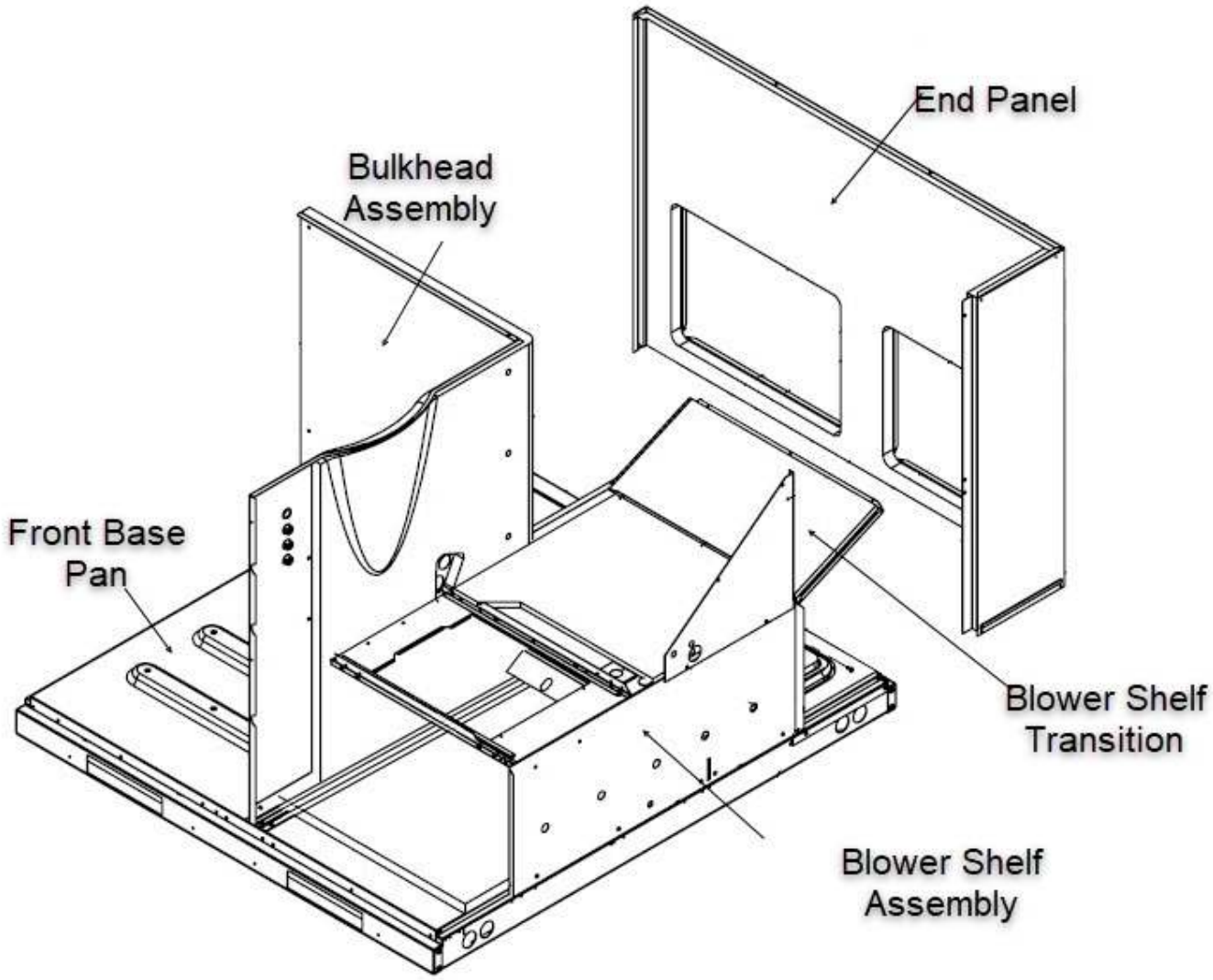

## RGEAYB parts breakdown: ADS-105128-18A 5 Internal View AC

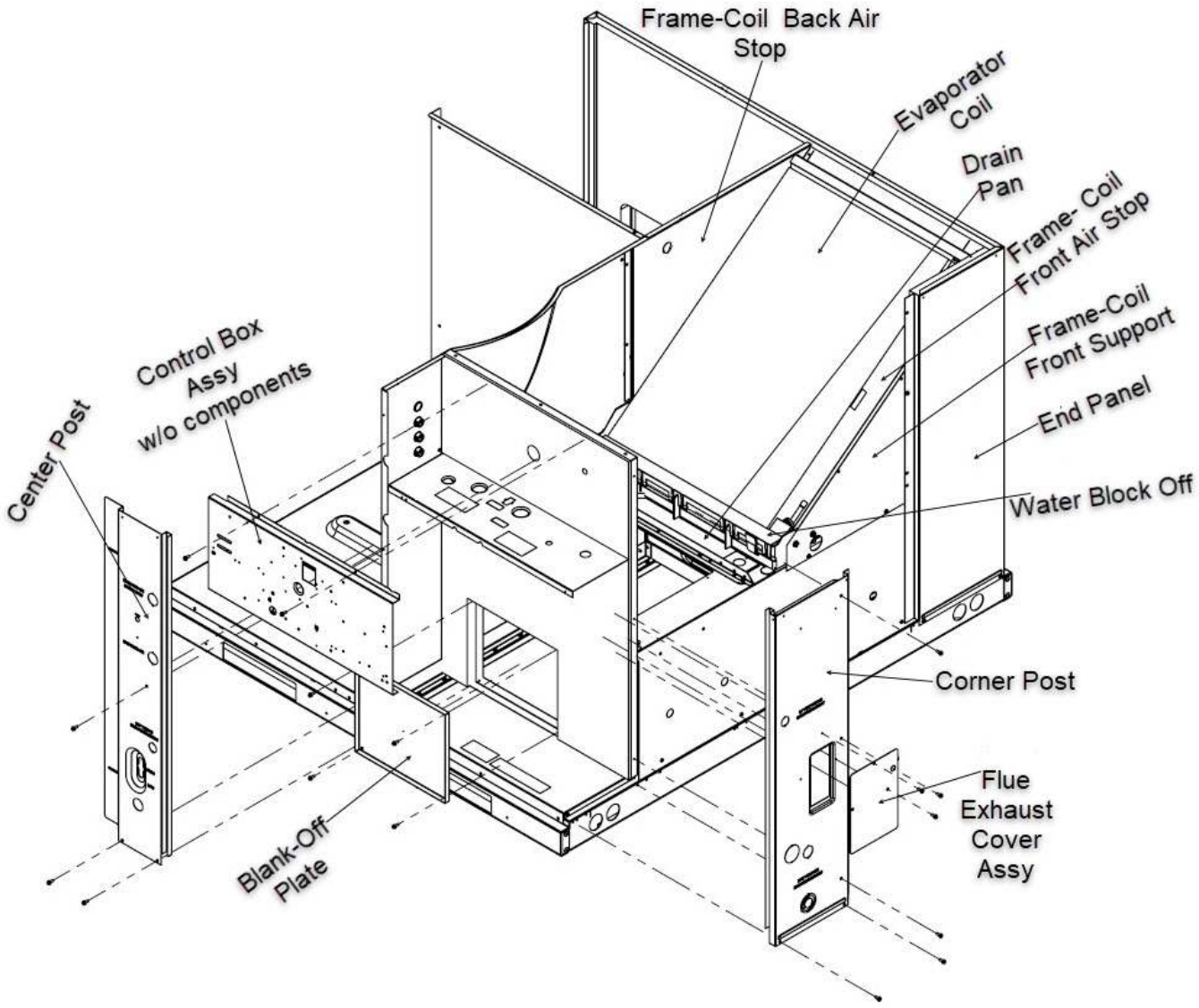

## RGEAYB parts breakdown: ADS-105128-18A 6 Bulkhead Wiring Bushings

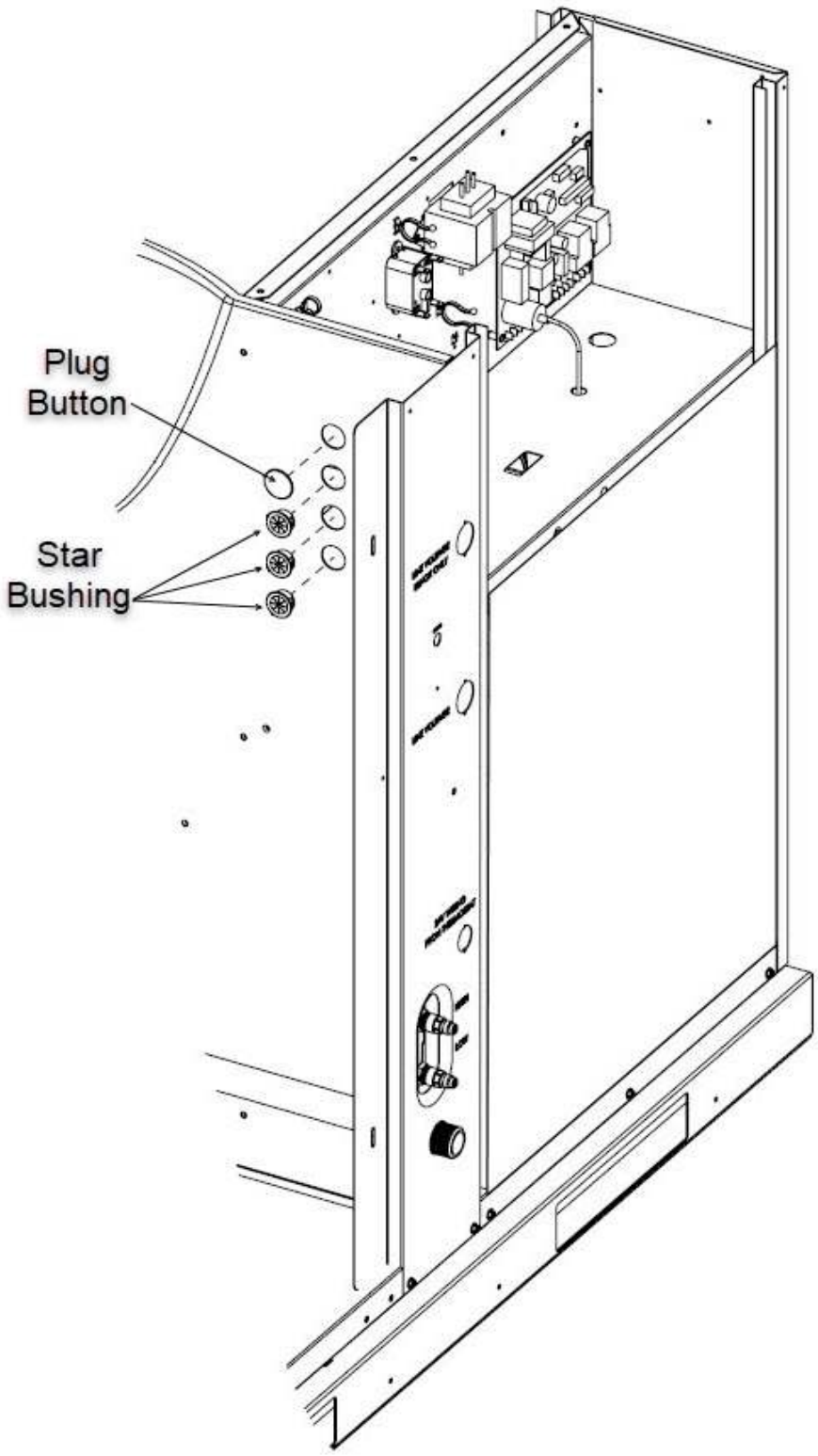

## RGEAYB parts breakdown: ADS-105128-18A 7 Control Panel AC

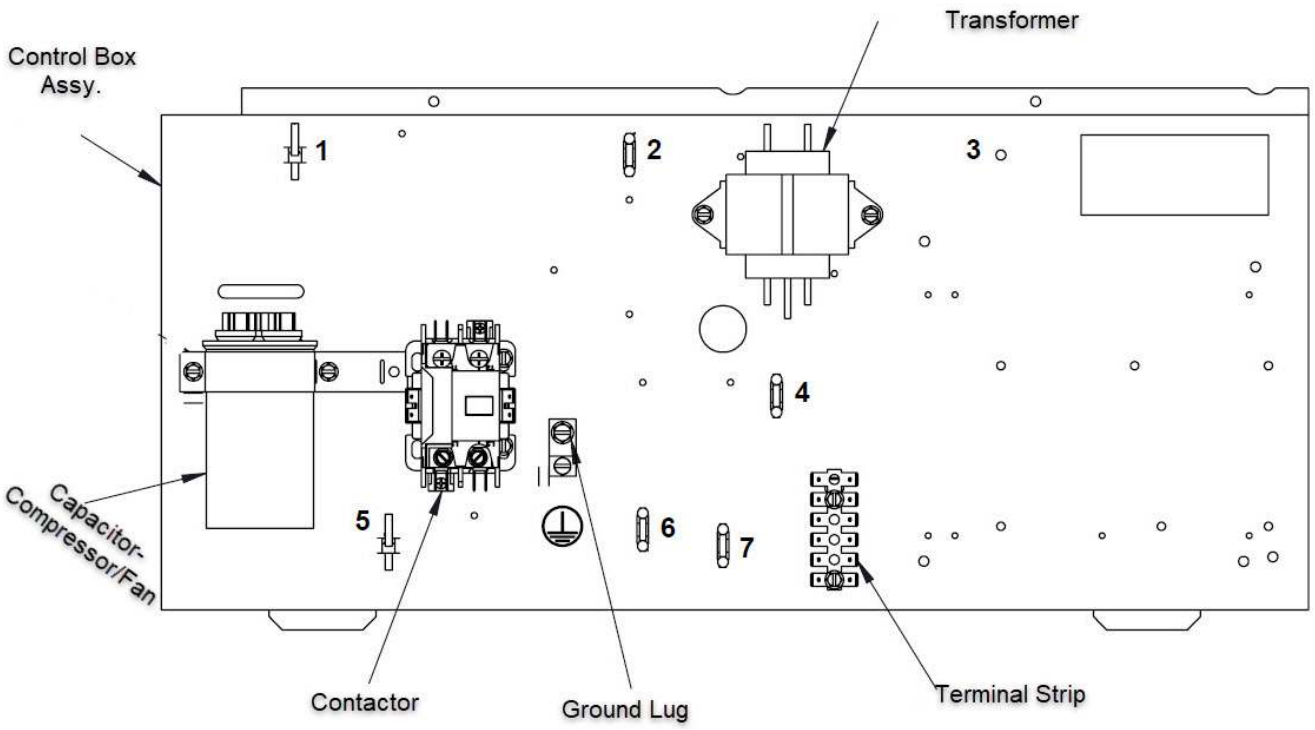

## RGEAYB parts breakdown: ADS-105128-18A 8 Outdoor Fan

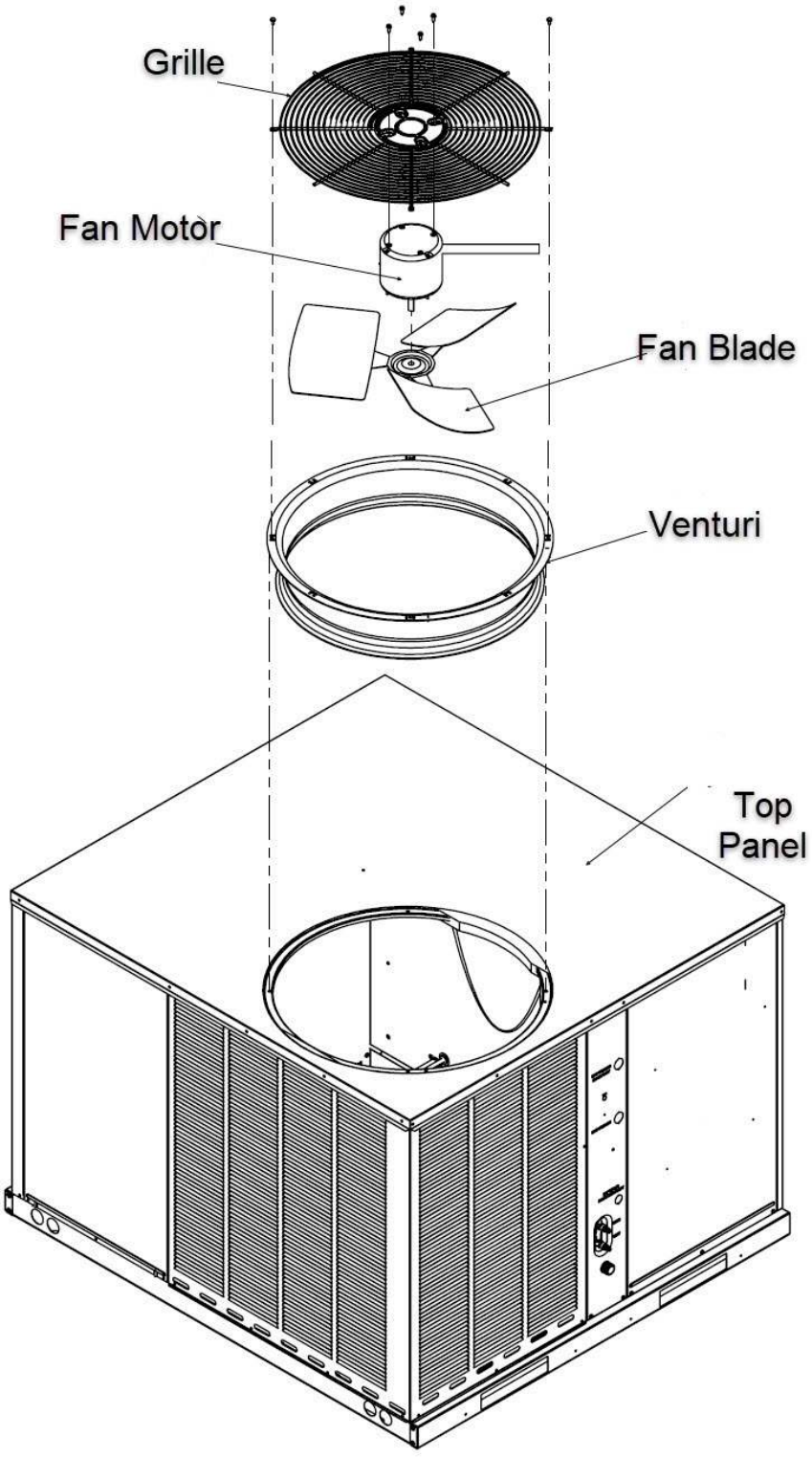

## RGEAYB parts breakdown: ADS-105128-18A 9 Blower Assembly

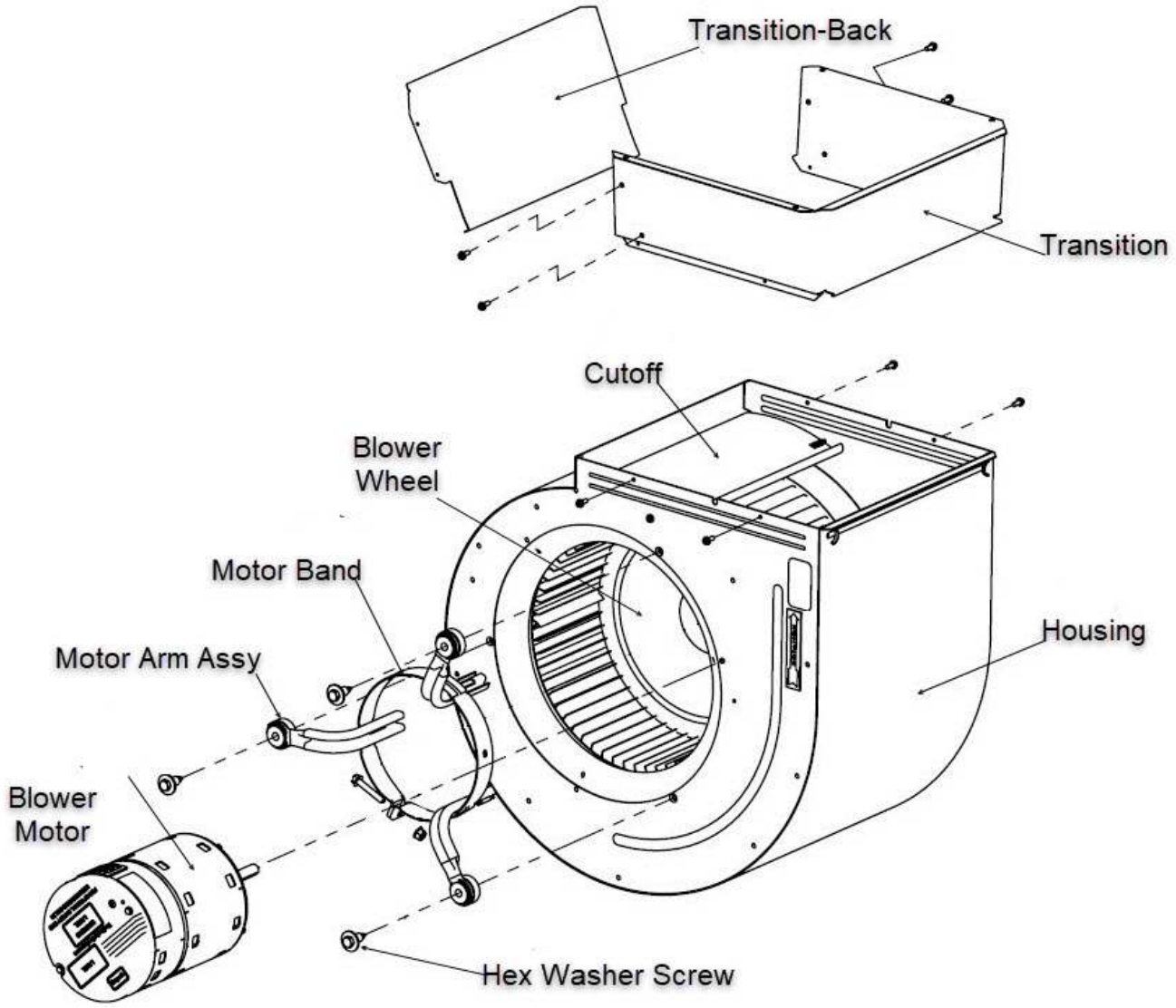

## RGEAYB parts breakdown: ADS-105134-18A 10 Outdoor Coil 2-3 Ton

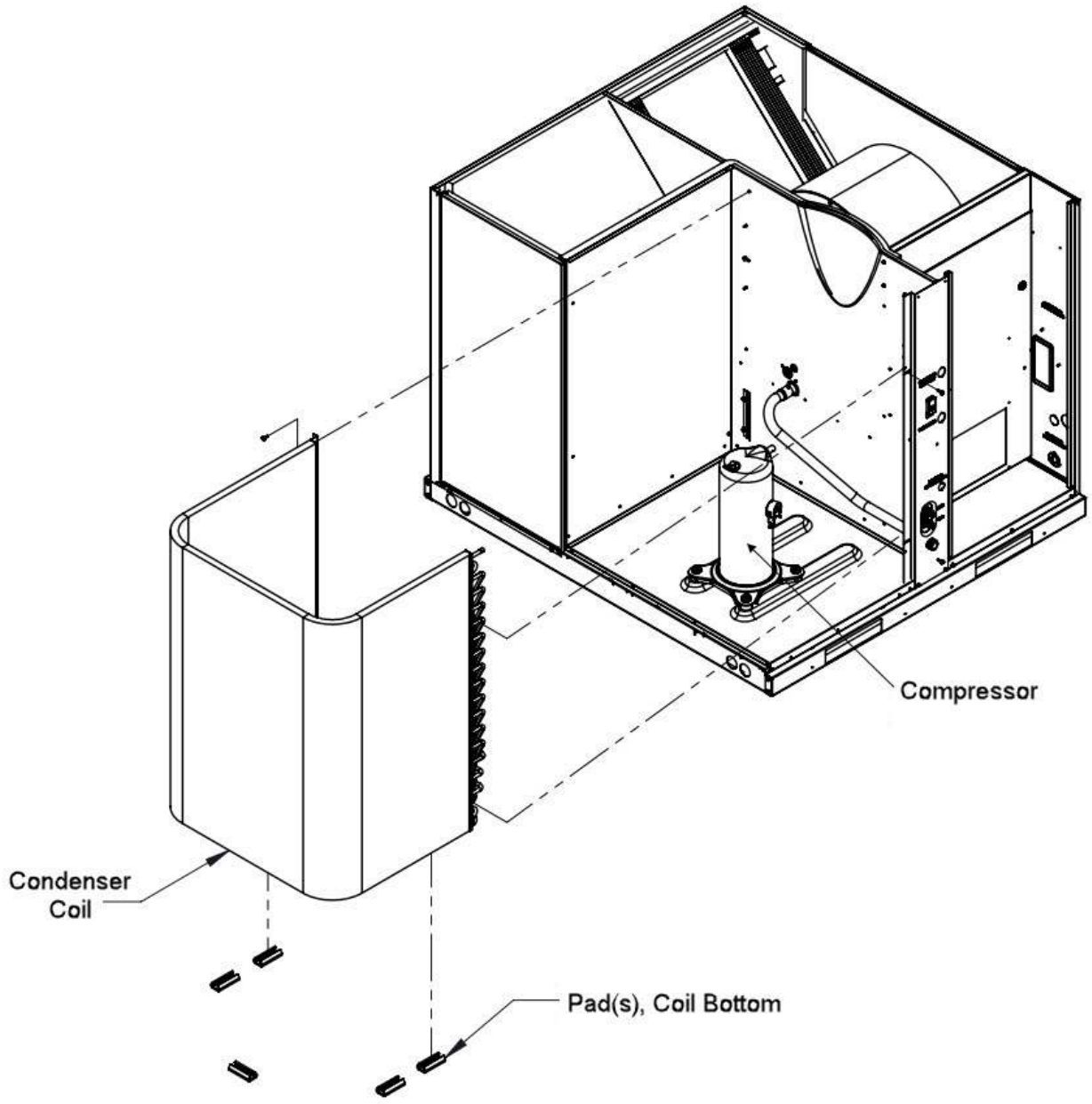

**RGEAYB parts breakdown: ADS-105134-18A 11 Coil Frames 2C Drainpan**

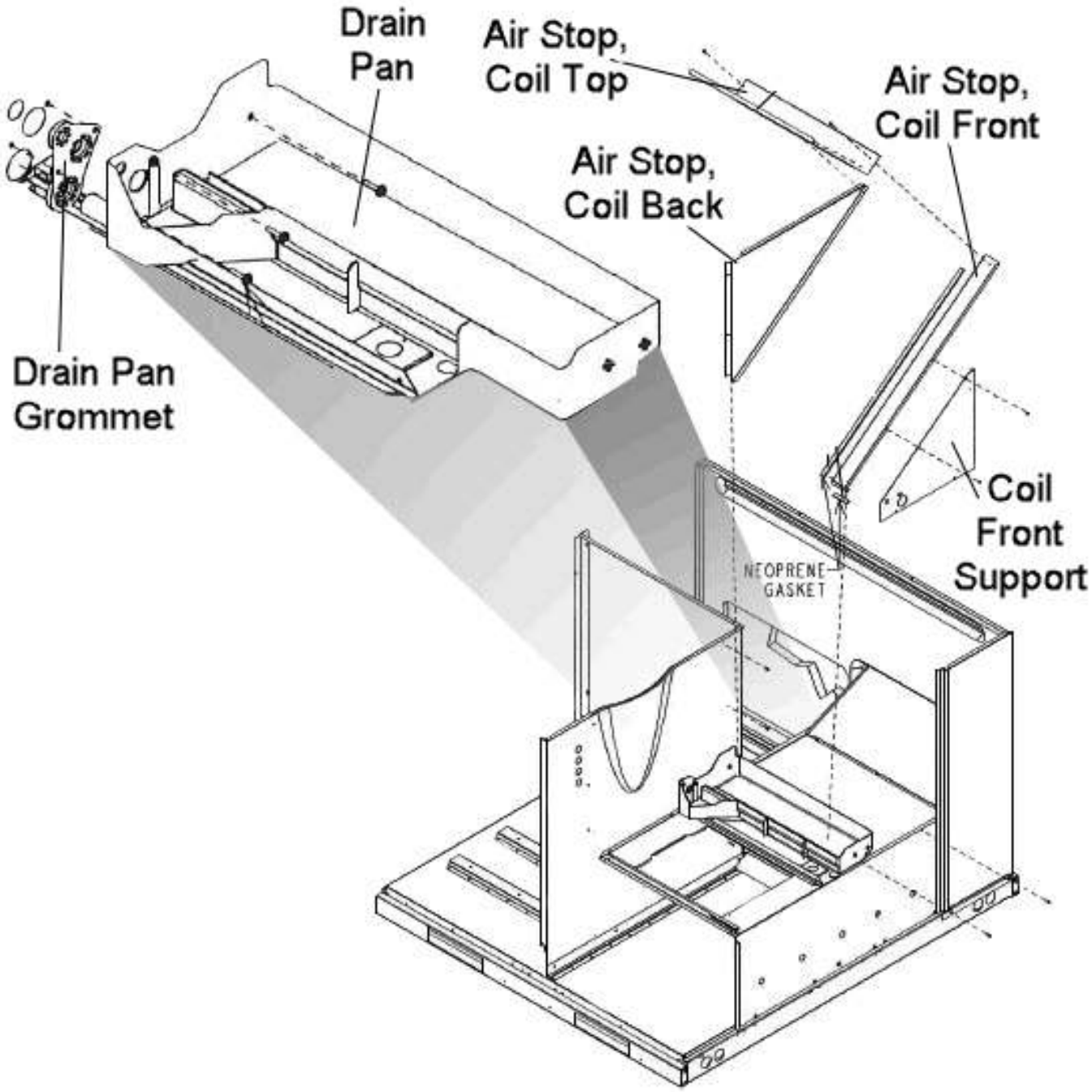

## RGEAYB parts breakdown: ADS-105134-18A 12 Compressor View 024

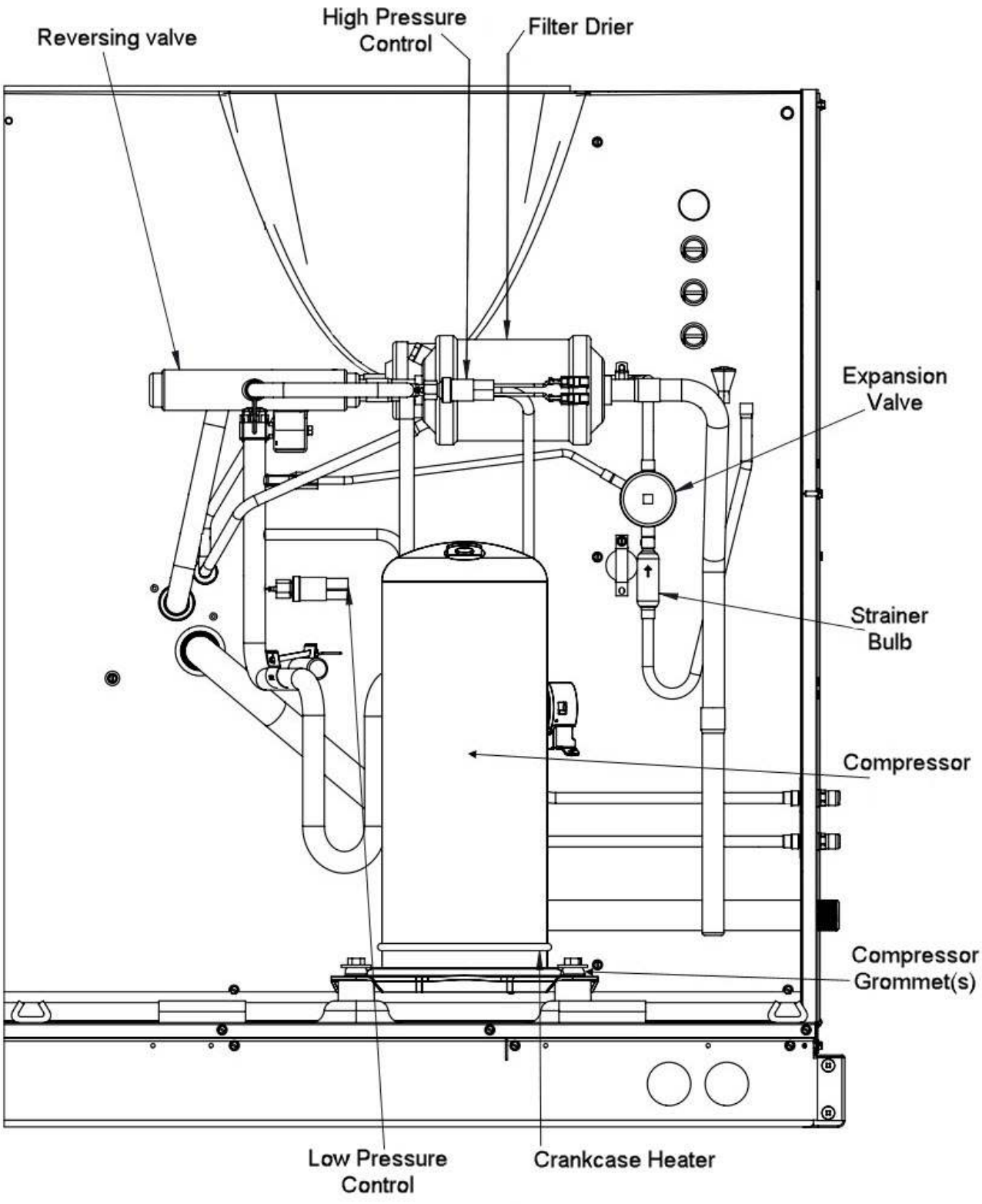

## RGEAYB parts breakdown: ADS-105134-18A 13 Compressor View 030

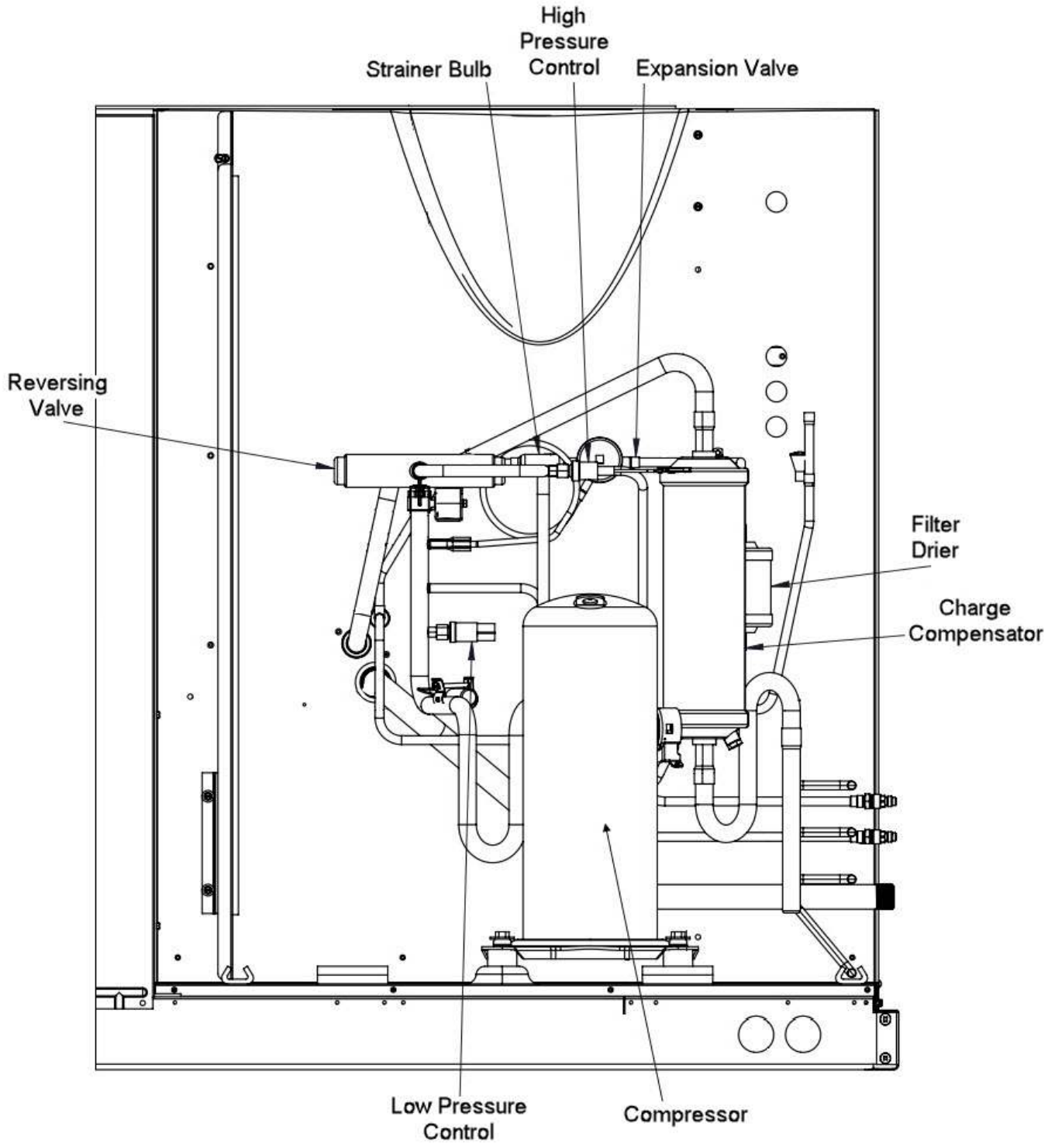

## RGEAYB parts breakdown: ADS-105134-18A 14 Compressor View 036

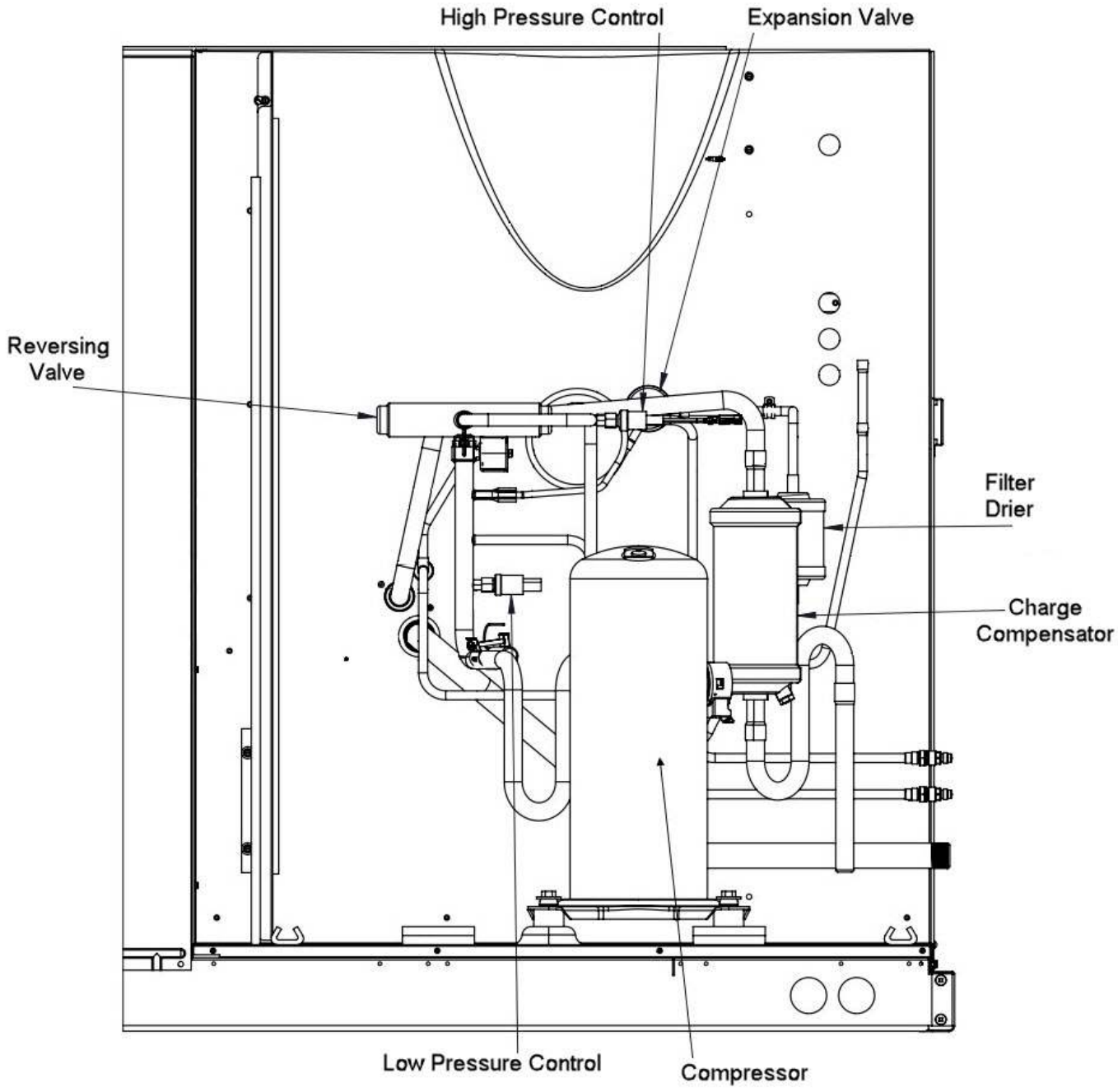

## RGEAYB parts breakdown: ADS-105134-18A 2 Exterior Cabinet 282 29

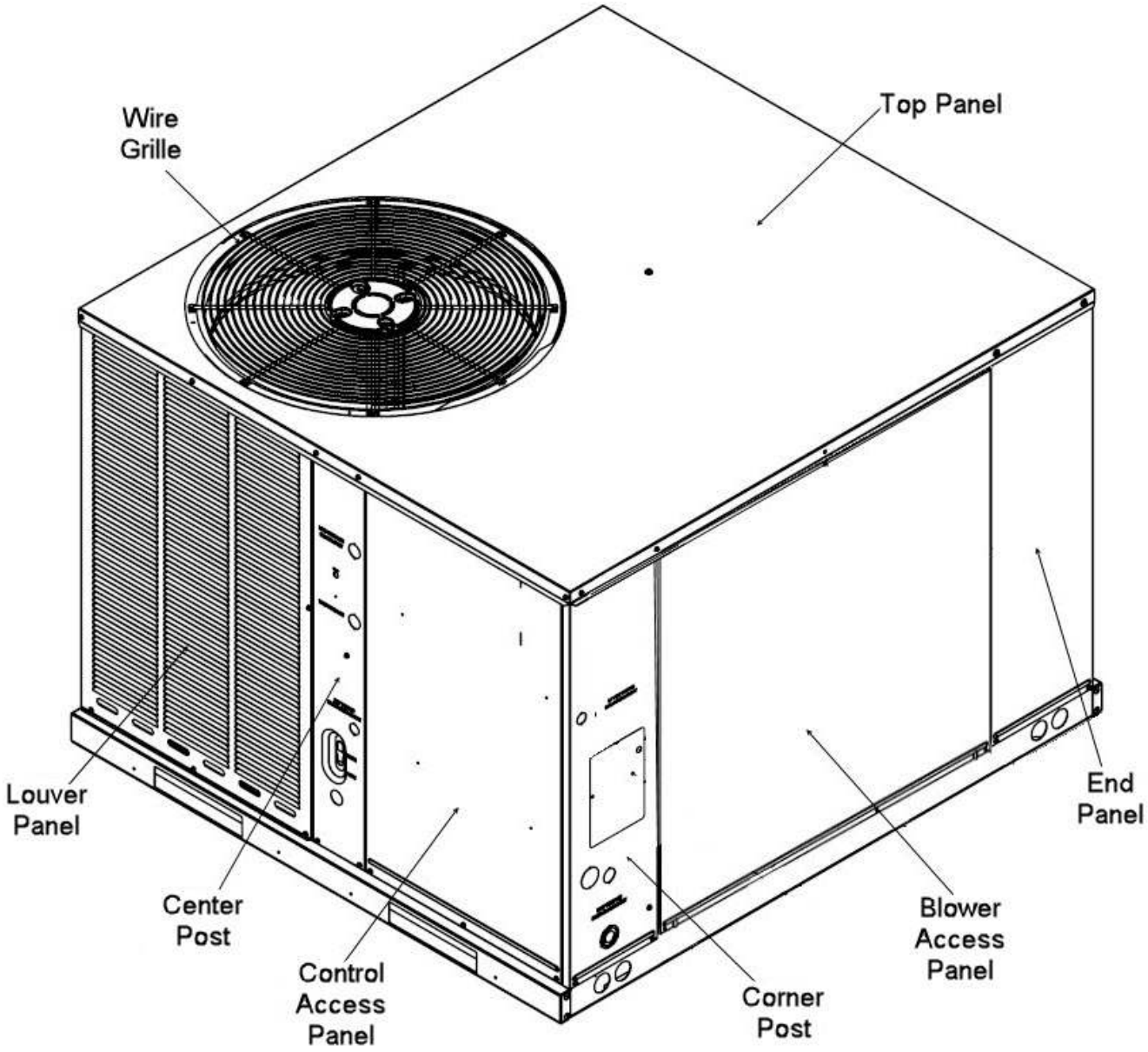

**RGEAYB parts breakdown: ADS-105134-18A 3 Internal View 281 29**

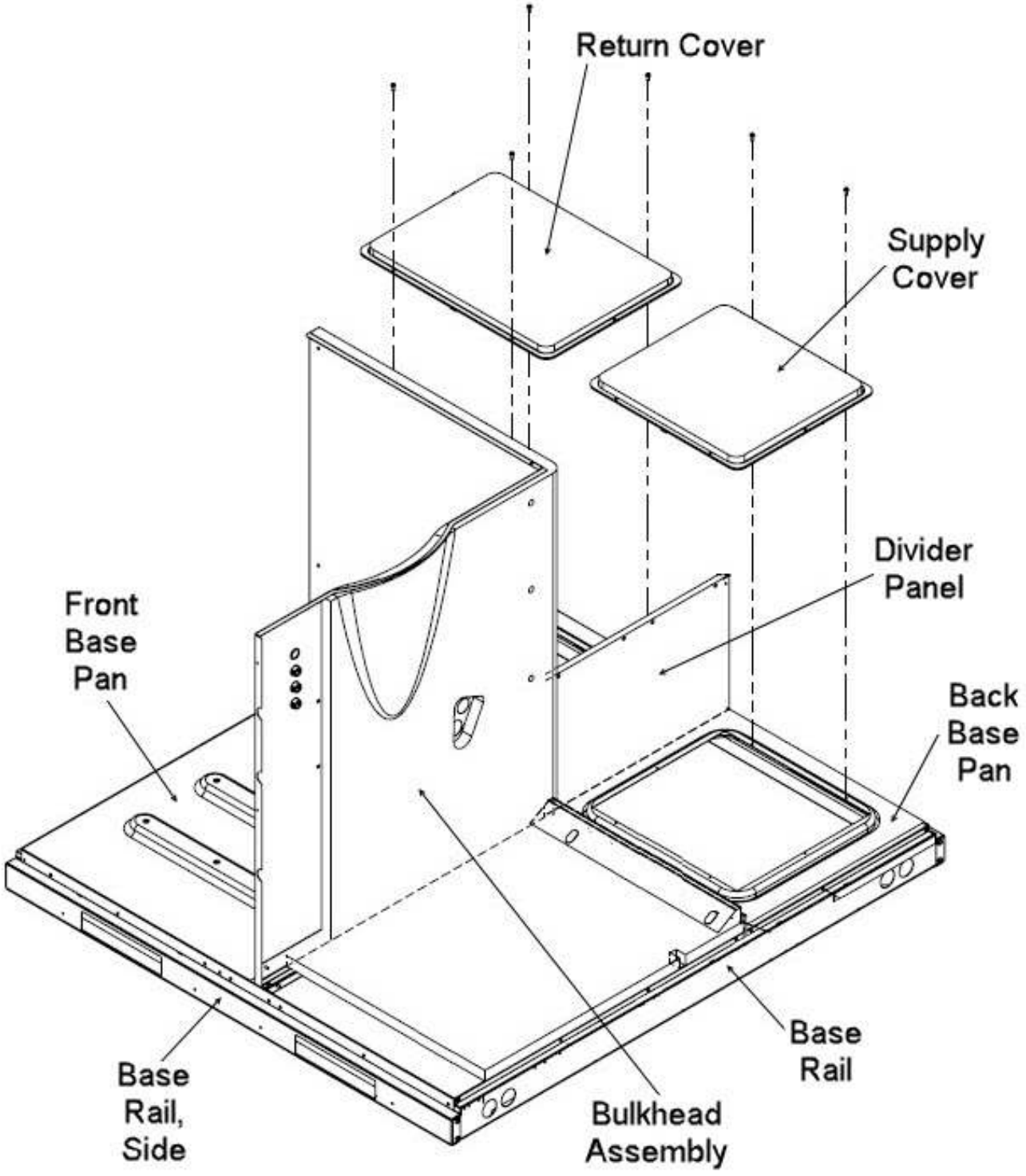

## RGEAYB parts breakdown: ADS-105134-18A 5 Internal View AC 283 29

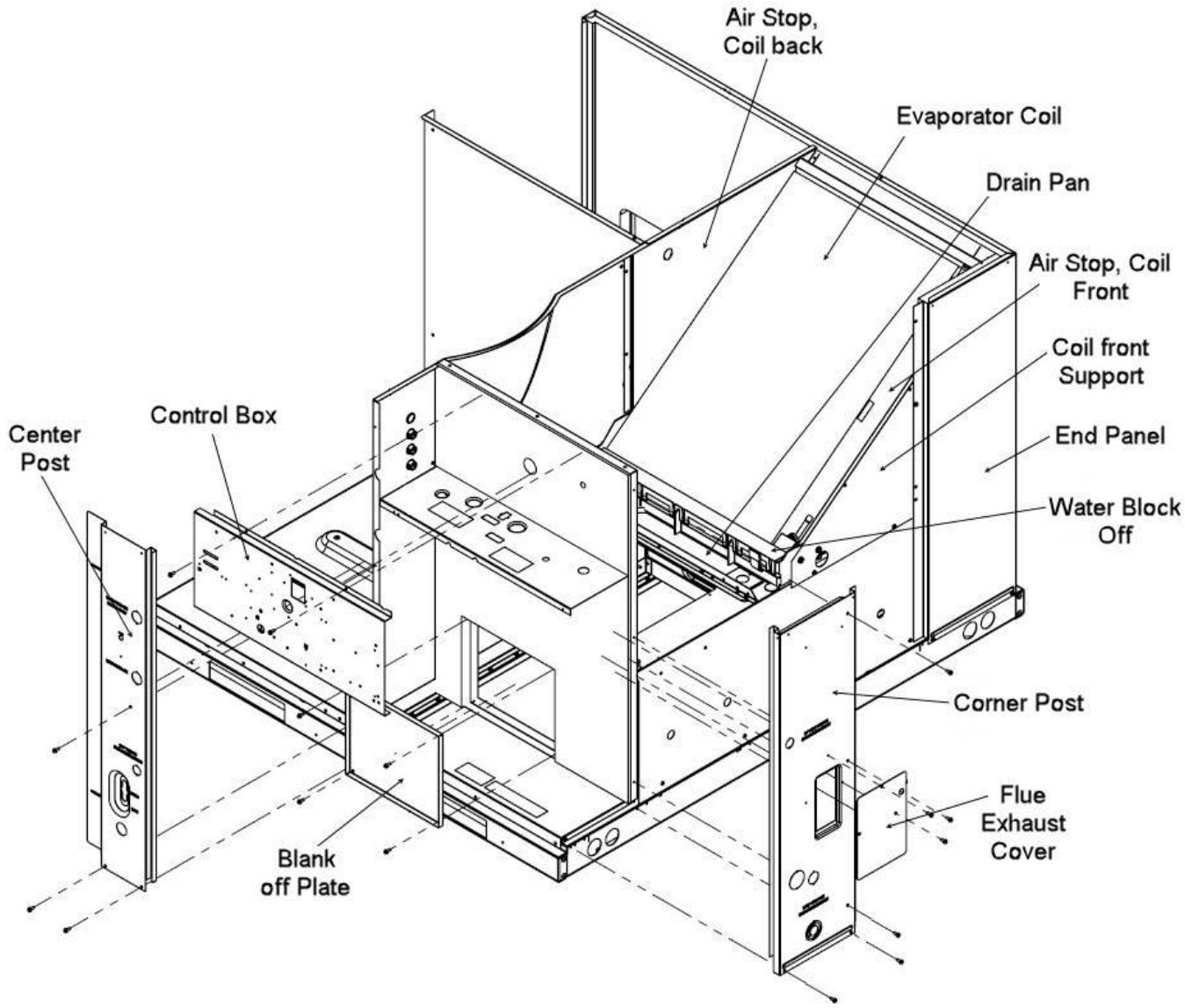

## RGEAYB parts breakdown: ADS-105134-18A 7 Control Panel HP

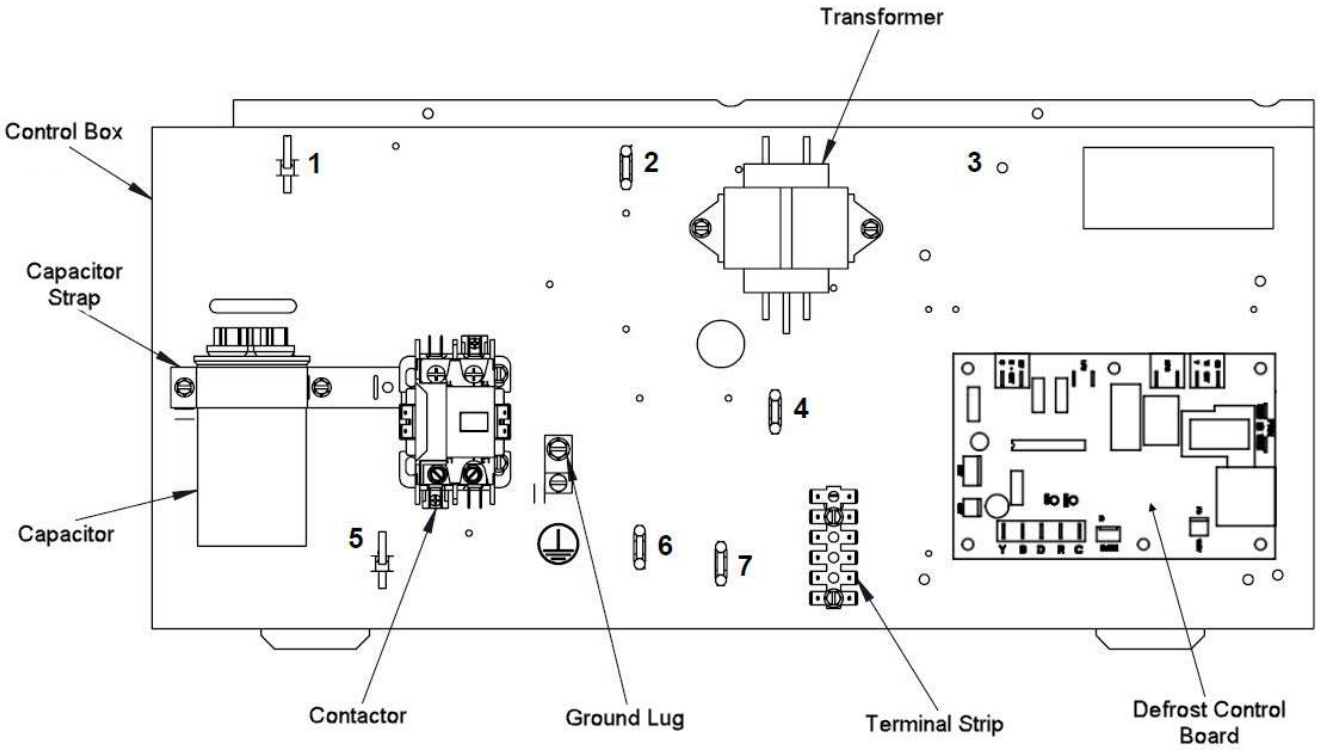

## RGEAYB parts breakdown: ADS-105134-18A 9 Blower Assembly

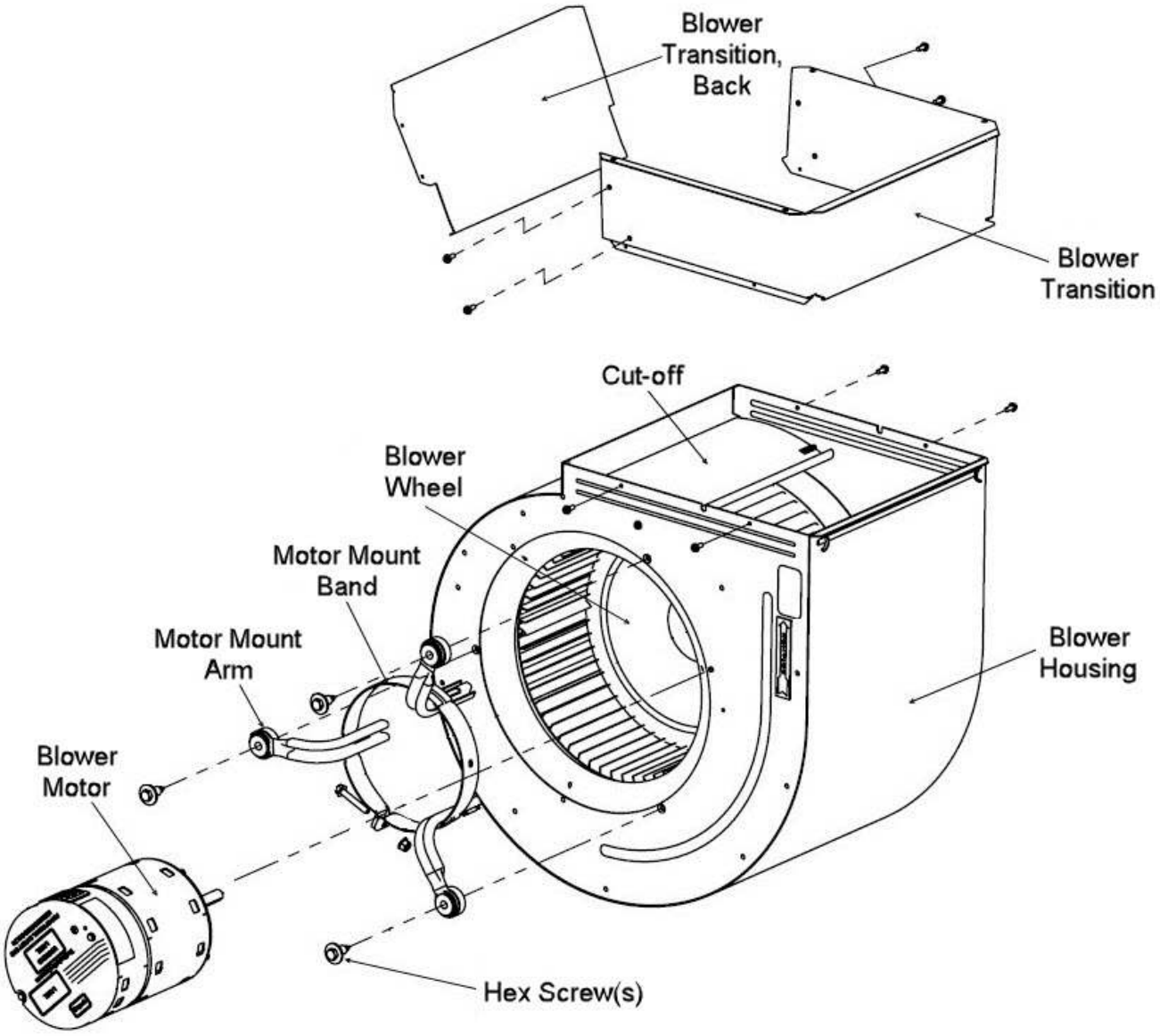

## Compressor

| Part No. | Description | Qty | Replaced By | Fits Models |
|---|---|---|---|---|
| **55-107225-240** | Compressor | 1 | | RGEAYB048AJT08XNAAJA, RGEAYB048AJT10XNAAJA |
| **55-107225-241** | Compressor | 1 | | RGEAYB060AJT10XNAAJA |
| **55-107225-248** | Compressor | 1 | | RGEAYB024AJT06XNAAJA |
| **55-107225-250** | Compressor | 1 | | RGEAYB030AJT06XNAAJA |
| **55-107225-252** | Compressor | 1 | | RGEAYB036AJT06XNAAJA, RGEAYB036AJT08XNAAJA |
| **55-107225-254** | Compressor | 1 | | RGEAYB042AJT08XNAAJA |
| **63-20072-03** | Compressor Mounting Screw (1-1/2 in. long) | 4 | | All models |
| **45-107231-02K** | Compressor Plug Assembly Kit - LG | 1 | | All models |
| **56-18518-16** | Mounting Grommet - Compressor | 4 | | All models |

## Motors & fans

| Part No. | Description | Qty | Replaced By | Fits Models |
|---|---|---|---|---|
| **70-100840-03** | Blower Assembly | 1 | | RGEAYB048AJT08XNAAJA, RGEAYB048AJT10XNAAJA, RGEAYB060AJT10XNAAJA |
| **AS-108843-01** | Blower Assembly | 1 | | RGEAYB024AJT06XNAAJA, RGEAYB030AJT06XNAAJA, RGEAYB036AJT06XNAAJA, RGEAYB036AJT08XNAAJA, RGEAYB042AJT08XNAAJA |
| **AS-108843-02** | Blower Assembly | 1 | | RGEAYB048AJT08XNAAJA, RGEAYB048AJT10XNAAJA, RGEAYB060AJT10XNAAJA |
| **70-100840-02** | Blower Assembly-Housing and Wheel only | 1 | | RGEAYB024AJT06XNAAJA, RGEAYB030AJT06XNAAJA, RGEAYB036AJT06XNAAJA, RGEAYB036AJT08XNAAJA, RGEAYB042AJT08XNAAJA |
| **70-101323-19K** | Fan Blade Kit | 1 | | All models |
| **70-23641-06** | Induced Draft Blower | 1 | | All models |
| **51-110551-03** | Motor - Broad Ocean (208-230V - 1 hp) | 1 | | RGEAYB036AJT08XNAAJA |
| **51-110551-04** | Motor - Broad Ocean (208-230V - 1 hp) | 1 | | RGEAYB036AJT06XNAAJA |
| **51-110551-00** | Motor - Broad Ocean (208-230V - 1 hp) - BLANK | 1 | | RGEAYB036AJT06XNAAJA, RGEAYB036AJT08XNAAJA |
| **51-110424-02** | Motor - Broad Ocean PSC - 1/2 hp, 825 rpm, 60Hz, 1PH, 230V | 1 | | RGEAYB060AJT10XNAAJA |
| **51-110424-08** | Motor - Broad Ocean PSC - 1/3 hp, 825 rpm, 60Hz, 1PH, 208-230V | 1 | | RGEAYB024AJT06XNAAJA, RGEAYB030AJT06XNAAJA, RGEAYB036AJT06XNAAJA, RGEAYB036AJT08XNAAJA |
| **51-110424-03** | Motor - Broad Ocean PSC - 1/3 hp, 825 rpm, 60Hz, 1PH, 230V | 1 | | RGEAYB042AJT08XNAAJA, RGEAYB048AJT10XNAAJA |
| **51-108729-11** | Motor - ENSITE Air (230V - 3/4 hp) | 1 | | RGEAYB042AJT08XNAAJA |
| **51-107105-39** | Motor - SelecTech Gen 3 (230V - 1-1/2 hp) | 1 | | RGEAYB048AJT08XNAAJA |
| **51-107105-40** | Motor - SelecTech Gen 3 (230V - 1-1/2 hp) | 1 | | RGEAYB060AJT10XNAAJA |
| **51-107105-42** | Motor - SelecTech Gen 3 (230V - 1-1/2 hp) | 1 | | RGEAYB048AJT10XNAAJA |
| **51-107105-00** | Motor - SelecTech Gen 3 (230V - 1-1/2 hp) - BLANK | 1 | | RGEAYB048AJT08XNAAJA, RGEAYB048AJT10XNAAJA, RGEAYB060AJT10XNAAJA |
| **51-106546-102** | Motor - SelecTech Gen 3 (230V - 3/4 hp) | 1 | | RGEAYB024AJT06XNAAJA |
| **51-106546-104** | Motor - SelecTech Gen 3 (230V - 3/4 hp) | 1 | | RGEAYB030AJT06XNAAJA |
| **51-106546-00** | Motor - SelecTech Gen 3 (230V - 3/4 hp) - BLANK | 1 | | RGEAYB024AJT06XNAAJA, RGEAYB030AJT06XNAAJA, RGEAYB042AJT08XNAAJA |
| **70-19929-09** | Motor Mount Arm w/Grommet | 3 | | All models |
| **70-19927-03** | Motor Mount Band | 1 | | All models |
| **PD515155** | Motor, 1/3 hp, 1130 RPM, 208/230V | 1 | | RGEAYB048AJT08XNAAJA |

## Electrical

| Part No. | Description | Qty | Replaced By | Fits Models |
|---|---|---|---|---|
| **43-101665-06** | Capacitor - 35/5/440 Dual Round | 1 | | RGEAYB024AJT06XNAAJA |
| **43-25133-14** | Capacitor - 40/5/440 Dual Round | 1 | | RGEAYB030AJT06XNAAJA |
| **43-25133-24** | Capacitor - 45/10/440 Dual Round | 1 | | RGEAYB042AJT08XNAAJA, RGEAYB060AJT10XNAAJA |
| **43-25133-16** | Capacitor - 45/5/440 Dual Round | 1 | | RGEAYB036AJT06XNAAJA, RGEAYB036AJT08XNAAJA |
| **43-101665-70** | Capacitor 35/10/440 Dual Round | 1 | | RGEAYB048AJT08XNAAJA, RGEAYB048AJT10XNAAJA |
| **42-109499-06K** | Contactor 32A XMC0-321 1P 1PH A2L | 1 | | All models |
| **45-19000-01** | Ground Lug | 1 | | All models |
| **62-23599-05** | Integrated Furnace Control Board (IFC) | 1 | | All models |
| **45-105282-06** | Power Supply Harness - Control Panel To Constant Torque Motor | 1 | | All models |
| **42-25106-01** | Relay - DPDT (24VAC coil) | 1 | | RGEAYB042AJT08XNAAJA, RGEAYB048AJT08XNAAJA, RGEAYB048AJT10XNAAJA, RGEAYB060AJT10XNAAJA |
| **42-101208-02K** | Relay Kit - SPST (208/230VAC coil) | 1 | | All models |
| **47-109642-01** | Sensor A2L (Sensirion) | 1 | | RGEAYB042AJT08XNAAJA, RGEAYB048AJT08XNAAJA, RGEAYB048AJT10XNAAJA, RGEAYB060AJT10XNAAJA |
| **45-42548-02** | Terminal Block | 1 | | All models |
| **46-25107-03** | Transformer | 1 | | All models |
| **45-110324-01** | Wiring Harness Assembly - RDS A-CAB | 1 | | RGEAYB042AJT08XNAAJA, RGEAYB048AJT08XNAAJA, RGEAYB048AJT10XNAAJA, RGEAYB060AJT10XNAAJA |
| **45-110324-03** | Wiring Harness Assembly - RDS Legacy GE | 1 | | RGEAYB042AJT08XNAAJA, RGEAYB048AJT08XNAAJA, RGEAYB048AJT10XNAAJA, RGEAYB060AJT10XNAAJA |
| **45-102393-06** | Wiring Harness Assembly 1 Stage Plug | 1 | | All models |

## Valves & switches

| Part No. | Description | Qty | Replaced By | Fits Models |
|---|---|---|---|---|
| **47-102290-10** | High Pressure Coontrol | 1 | | All models |
| **47-102436-06** | Limit Switch - Auto Reset (Flanged Airstream - Low Voltage) | 1 | | RGEAYB036AJT08XNAAJA, RGEAYB042AJT08XNAAJA, RGEAYB048AJT08XNAAJA, RGEAYB048AJT10XNAAJA, RGEAYB060AJT10XNAAJA |
| **47-102436-08** | Limit Switch - Auto Reset (Flanged Airstream - Low Voltage) | 1 | | RGEAYB024AJT06XNAAJA, RGEAYB030AJT06XNAAJA, RGEAYB036AJT06XNAAJA |
| **47-22861-02K** | Limit Switch Kit - Manual Reset (Flanged Airstream) | 1 | | All models |
| **42-105601-21** | Pressure Switch | 1 | | All models |
| **61-18551-01** | Valve Core | 2 | | All models |

## Coil & refrigeration

| Part No. | Description | Qty | Replaced By | Fits Models |
|---|---|---|---|---|
| **82-18419-01** | Copper Tee | 1 | | All models |
| **61-106118-01** | CoreMax Valve Core | 2 | | All models |
| **61-110124-01** | Expansion Valve (TXV) | 1 | | RGEAYB024AJT06XNAAJA |
| **61-110124-02** | Expansion Valve (TXV) | 1 | | RGEAYB030AJT06XNAAJA |
| **61-110124-03** | Expansion Valve (TXV) | 1 | | RGEAYB036AJT06XNAAJA, RGEAYB036AJT08XNAAJA |
| **61-110124-04** | Expansion Valve (TXV) | 1 | | RGEAYB042AJT08XNAAJA |

| Part No. | Description | Qty | Replaced By | Fits Models |
|---|---|---|---|---|
| **61-110124-05** | Expansion Valve (TXV) | 1 | | RGEAYB048AJT08XNAAJA, RGEAYB048AJT10XNAAJA |
| **61-110124-06** | Expansion Valve (TXV) | 1 | | RGEAYB060AJT10XNAAJA |
| **AS-104395-14** | Micro Channel Coil - Bent Assembly | 1 | | RGEAYB042AJT08XNAAJA |
| **AS-104395-16** | Micro Channel Coil - Bent Assembly | 1 | | RGEAYB024AJT06XNAAJA |
| **AS-104395-17** | Micro Channel Coil - Bent Assembly | 1 | | RGEAYB030AJT06XNAAJA |
| **AS-104395-18** | Micro Channel Coil - Bent Assembly | 1 | | RGEAYB036AJT06XNAAJA, RGEAYB036AJT08XNAAJA |
| **AS-104395-19** | Micro Channel Coil - Bent Assembly | 1 | | RGEAYB048AJT08XNAAJA, RGEAYB048AJT10XNAAJA, RGEAYB060AJT10XNAAJA |
| **65-104387-05K** | Micro Channel Evaporator Coil | 1 | | RGEAYB042AJT08XNAAJA, RGEAYB048AJT08XNAAJA, RGEAYB048AJT10XNAAJA |
| **65-104387-09K** | Micro Channel Evaporator Coil | 1 | | RGEAYB060AJT10XNAAJA |
| **AS-104387-09** | Micro Channel Evaporator Coil w/Gasket | 1 | | RGEAYB060AJT10XNAAJA |
| **83-25151-41** | PROTECH Liquid Line Filter Drier (Uni-directional) | 1 | | All models |
| **64-21106-02** | TXV Bulb Strap Mounting Kit | 1 | | All models |

## Gas

| Part No. | Description | Qty | Replaced By | Fits Models |
|---|---|---|---|---|
| **AS-60993-05** | Burner | 1 | | All models |
| **AS-108834-01** | Burner Mounting Frame Assembly | 1 | | All models |
| **62-23543-02K** | Flame Sensor Kit | 1 | | All models |
| **60-105055-01** | Gas Valve | 1 | | All models |
| **AS-108840-07** | Heat Exchanger Assembly - Low Nox | 1 | | RGEAYB036AJT08XNA, RGEAYB042AJT08XNA, RGEAYB048AJT08XNA |
| **AS-108840-08** | Heat Exchanger Assembly - Low Nox | 1 | | RGEAYB048AJT10XNA, RGEAYB060AJT10XNA |
| **AS-108840-06** | Heat Exchanger Assembly - NOX Model | 1 | | RGEAYB024AJT06XNA, RGEAYB030AJT06XNA, RGEAYB036AJT06XNA |
| **AS-108840-22** | Heat Exchanger Assembly - Stainless Steel - NOX Model | 1 | | RGEAYB024AJT06XNAAJA, RGEAYB030AJT06XNAAJA, RGEAYB036AJT06XNAAJA |
| **AS-108840-23** | Heat Exchanger Assembly - Stainless Steel - NOX Model | 1 | | RGEAYB036AJT08XNAAJA, RGEAYB042AJT08XNAAJA, RGEAYB048AJT08XNAAJA |
| **AS-108840-24** | Heat Exchanger Assembly - Stainless Steel - NOX Model | 1 | | RGEAYB048AJT10XNAAJA, RGEAYB060AJT10XNAAJA |
| **62-23556-82** | Ignitor - Direct Spark Ignition (DSI) | 1 | | All models |
| **62-22175-45** | Orifice | 2/3 | | All models |

## Cabinet & hardware

| Part No. | Description | Qty | Replaced By | Fits Models |
|---|---|---|---|---|
| **68-104248-03** | "U" Shaped Coil Pad | 3/4/5 | | All models |
| **AE-58566-01HT** | Access Panel - Blower | 1 | | RGEAYB024AJT06XNAAJA, RGEAYB030AJT06XNAAJA, RGEAYB036AJT06XNAAJA, RGEAYB036AJT08XNAAJA |
| **AE-58566-02HT** | Access Panel - Blower | 1 | | RGEAYB042AJT08XNAAJA, RGEAYB048AJT08XNAAJA, RGEAYB048AJT10XNAAJA, RGEAYB060AJT10XNAAJA |
| **AE-58568-01HT** | Access Panel - Controls | 1 | | RGEAYB024AJT06XNAAJA, RGEAYB030AJT06XNAAJA, RGEAYB036AJT06XNAAJA, RGEAYB036AJT08XNAAJA |
| **AE-58568-03HT** | Access Panel - Controls | 1 | | RGEAYB042AJT08XNAAJA, RGEAYB048AJT08XNAAJA, RGEAYB048AJT10XNAAJA, RGEAYB060AJT10XNAAJA |

| Part No. | Description | Qty | Replaced By | Fits Models |
|---|---|---|---|---|
| **AE-58571-01HT** | Access Panel - Filter | 1 | | RGEAYB024AJT06XNAAJA, RGEAYB030AJT06XNAAJA, RGEAYB036AJT06XNAAJA, RGEAYB036AJT08XNAAJA |
| **AE-58571-02HT** | Access Panel - Filter | 1 | | RGEAYB042AJT08XNAAJA, RGEAYB048AJT08XNAAJA, RGEAYB048AJT10XNAAJA, RGEAYB060AJT10XNAAJA |
| **83-100635-01** | Access Valve Cap | 3 | | All models |
| **83-100635-05** | Access Valve Cap | 3 | | All models |
| **AE-54609-01** | Adapter Plate | 1 | | RGEAYB024AJT06XNAAJA, RGEAYB030AJT06XNAAJA, RGEAYB036AJT06XNAAJA, RGEAYB036AJT08XNAAJA |
| **82-58611-02** | Auxiliary Drain Pipe | 1 | | All models |
| **AS-108823-01** | Back Base Pan Insulation Assembly | 1 | | All models |
| **AE-58564-02** | Base Pan - Back | 1 | | All models |
| **AE-58563-09** | Base Pan - Front | 1 | | All models |
| **AE-58562-06** | Base Rail | 2 | | All models |
| **AE-58562-08** | Base Rail | 2 | | All models |
| **AS-108821-01** | Base Rail Assembly | 1 | | All models |
| **AS-108820-01HT** | Blower Access Assembly (Short) | 1 | | RGEAYB024AJT06XNAAJA, RGEAYB030AJT06XNAAJA, RGEAYB036AJT06XNAAJA, RGEAYB036AJT08XNAAJA |
| **AS-108820-02HT** | Blower Access Assembly (Tall) | 1 | | RGEAYB042AJT08XNAAJA, RGEAYB048AJT08XNAAJA, RGEAYB048AJT10XNAAJA, RGEAYB060AJT10XNAAJA |
| **AS-108825-01** | Blower Shelf Assembly | 1 | | All models |
| **AS-108826-01** | Blower Shelf Transition Assembly | 1 | | All models |
| **63-19919-01** | Bolt, 1/4-20 x 1-1/2 in. | 1 | | All models |
| **AE-58589-01** | Bracket | 1 | | All models |
| **AE-61588-02** | Bracket - Burner | 2 | | All models |
| **AS-108813-07** | Bulkhead/Insulation - Short Assembly | 1 | | RGEAYB024AJT06XNAAJA, RGEAYB030AJT06XNAAJA, RGEAYB036AJT06XNAAJA, RGEAYB036AJT08XNAAJA |
| **AE-109352-01** | Burner Floor - Drip Panel | 1 | | All models |
| **AS-108832-01** | Burner Floor Assembly | 1 | | All models |
| **AE-102438-01** | Burner Support | 1 | | All models |
| **45-17057-19** | Bushing - Nylon Snap | 1 | | All models |
| **45-17055-01** | Bushing - Strain Relief | 1 | | All models |
| **45-17055-11** | Bushing - Strain Relief | 1/2/3 | | All models |
| **45-18232-02** | Button Plug - Metal (Snap-In) | 1/2 | | All models |
| **64-101148-06** | Cable Tie - Double Loop, 7.6" | 1 | | All models |
| **AE-50892-59** | Capacitor Strap | 1 | | RGEAYB042AJT08XNAAJA, RGEAYB048AJT08XNAAJA, RGEAYB048AJT10XNAAJA, RGEAYB060AJT10XNAAJA |
| **AS-108818-01HT** | Center Post Assembly (Short) | 1 | | RGEAYB024AJT06XNAAJA, RGEAYB030AJT06XNAAJA, RGEAYB036AJT06XNAAJA, RGEAYB036AJT08XNAAJA |
| **AS-108818-02HT** | Center Post Assembly (Tall) | 1 | | RGEAYB042AJT08XNAAJA, RGEAYB048AJT08XNAAJA, RGEAYB048AJT10XNAAJA, RGEAYB060AJT10XNAAJA |
| **63-109233-01** | Clip Assembly | 1 | | All models |
| **AE-58588-06** | Collector Box - 3-Ton 80k | 1 | | RGEAYB036AJT08XNAAJA, RGEAYB042AJT08XNAAJA, RGEAYB048AJT08XNAAJA |
| **AE-58599-01HT** | Combustion Air Inlet Hood | 1 | | All models |

| Part No. | Description | Qty | Replaced By | Fits Models |
|---|---|---|---|---|
| **AS-108846-01HT** | Condenser Coil Mount Assembly | 1 | | RGEAYB036AJT06XNAAJA, RGEAYB036AJT08XNAAJA |
| **AS-108846-02HT** | Condenser Coil Mount Assembly | 1 | | RGEAYB042AJT08XNAAJA, RGEAYB048AJT08XNAAJA, RGEAYB048AJT10XNAAJA, RGEAYB060AJT10XNAAJA |
| **AS-108846-03HT** | Condenser Coil Mount Assembly | 1 | | RGEAYB024AJT06XNAAJA, RGEAYB030AJT06XNAAJA |
| **10-58570-10HT** | Condenser Louver Panel | 1 | | RGEAYB024AJT06XNAAJA, RGEAYB030AJT06XNAAJA, RGEAYB036AJT06XNAAJA, RGEAYB036AJT08XNAAJA |
| **AE-107932-01** | Control Box Back Panel | 1 | | All models |
| **AS-108830-01** | Control Box Shelf Assembly | 1 | | All models |
| **AS-108845-01HT** | Control/Gas Access Panel Assembly (Short) | 1 | | RGEAYB024AJT06XNAAJA, RGEAYB030AJT06XNAAJA, RGEAYB036AJT06XNAAJA, RGEAYB036AJT08XNAAJA |
| **AS-108845-02HT** | Control/Gas Access Panel Assembly (Tall) | 1 | | RGEAYB042AJT08XNAAJA, RGEAYB048AJT08XNAAJA, RGEAYB048AJT10XNAAJA, RGEAYB060AJT10XNAAJA |
| **AE-108470-01HT** | Corner Post (Short) | 1 | | RGEAYB024AJT06XNAAJA, RGEAYB030AJT06XNAAJA, RGEAYB036AJT06XNAAJA, RGEAYB036AJT08XNAAJA |
| **AE-108470-02HT** | Corner Post (Tall) | 1 | | RGEAYB042AJT08XNAAJA, RGEAYB048AJT08XNAAJA, RGEAYB048AJT10XNAAJA, RGEAYB060AJT10XNAAJA |
| **AS-108816-01HT** | Corner Post Assembly (Short) | 1 | | RGEAYB024AJT06XNAAJA, RGEAYB030AJT06XNAAJA, RGEAYB036AJT06XNAAJA, RGEAYB036AJT08XNAAJA |
| **AS-108816-02HT** | Corner Post Assembly (Tall) | 1 | | RGEAYB042AJT08XNAAJA, RGEAYB048AJT08XNAAJA, RGEAYB048AJT10XNAAJA, RGEAYB060AJT10XNAAJA |
| **AS-108824-01** | Divider Panel Insulation Assembly | 1 | | All models |
| **68-108460-01** | Drain Pan | 1 | | All models |
| **AS-108827-01** | Drain Pan Assembly | 1 | | All models |
| **56-23601-01** | Drain Pan Fitting | 1 | | All models |
| **63-22159-01** | Drill-Tip Sheet Metal Screw, 8-18 x 1/2 in. | 1 | | All models |
| **AE-58586-01HT** | Duct Cover - Return Air | 1 | | All models |
| **AE-58587-01HT** | Duct Cover - Supply Air | 1 | | All models |
| **AE-58565-01HT** | End Panel | 1 | | RGEAYB024AJT06XNAAJA, RGEAYB030AJT06XNAAJA, RGEAYB036AJT06XNAAJA, RGEAYB036AJT08XNAAJA |
| **AE-58565-02HT** | End Panel | 1 | | RGEAYB042AJT08XNAAJA, RGEAYB048AJT08XNAAJA, RGEAYB048AJT10XNAAJA, RGEAYB060AJT10XNAAJA |
| **AS-108817-01HT** | End Panel Assembly (Short) | 1 | | RGEAYB024AJT06XNAAJA, RGEAYB030AJT06XNAAJA, RGEAYB036AJT06XNAAJA, RGEAYB036AJT08XNAAJA |
| **AS-108817-02HT** | End Panel Assembly (Tall) | 1 | | RGEAYB042AJT08XNAAJA, RGEAYB048AJT08XNAAJA, RGEAYB048AJT10XNAAJA, RGEAYB060AJT10XNAAJA |
| **AS-58728-01** | Exhaust Transition Assembly | 1 | | All models |
| **AS-108814-01** | Extension Panel Insulation Assembly | 1 | | RGEAYB042AJT08XNAAJA, RGEAYB048AJT08XNAAJA, RGEAYB048AJT10XNAAJA, RGEAYB060AJT10XNAAJA |
| **64-23207-02** | EZ Twist Lock Support Fastener | 1/3/6 | | All models |

| Part No. | Description | Qty | Replaced By | Fits Models |
|---|---|---|---|---|
| **95-108200-01** | Fan Grille | 1 | | All models |
| **AS-108829-01** | Fan Grille/Venturi Assembly | 1 | | All models |
| **AS-108819-01HT** | Filter Access Assembly (Short) | 1 | | RGEAYB024AJT06XNAAJA, RGEAYB030AJT06XNAAJA, RGEAYB036AJT06XNAAJA, RGEAYB036AJT08XNAAJA |
| **AS-108819-02HT** | Filter Access Assembly (Tall) | 1 | | RGEAYB042AJT08XNAAJA, RGEAYB048AJT08XNAAJA, RGEAYB048AJT10XNAAJA, RGEAYB060AJT10XNAAJA |
| **AE-102132-01** | Filter Drier Strap | 1 | | All models |
| **AS-108828-01** | Filter Drier Strap Assembly | 1 | | All models |
| **AS-108838-01HT** | Flue Exhaust Hood/Inlet Insert | 1 | | All models |
| **AS-108831-01** | Flue Exhaust Transition Assembly | 1 | | All models |
| **AS-108812-09** | Frame - Coil Back Air Stop Short Assembly | 1 | | RGEAYB024AJT06XNAAJA, RGEAYB030AJT06XNAAJA, RGEAYB036AJT06XNAAJA, RGEAYB036AJT08XNAAJA |
| **AE-104570-01HT** | Frame - Coil Front Air Stop | 1 | | RGEAYB024AJT06XNAAJA, RGEAYB030AJT06XNAAJA, RGEAYB036AJT06XNAAJA, RGEAYB036AJT08XNAAJA |
| **AE-104570-02HT** | Frame - Coil Front Air Stop | 1 | | RGEAYB042AJT08XNAAJA, RGEAYB048AJT08XNAAJA, RGEAYB048AJT10XNAAJA, RGEAYB060AJT10XNAAJA |
| **AS-108812-01** | Frame - Coil Front Air Stop Assembly (Short) | 1 | | RGEAYB024AJT06XNAAJA, RGEAYB030AJT06XNAAJA, RGEAYB036AJT06XNAAJA, RGEAYB036AJT08XNAAJA |
| **AS-108812-04** | Frame - Coil Front Air Stop Assembly (Tall) | 1 | | RGEAYB042AJT08XNAAJA, RGEAYB048AJT08XNAAJA, RGEAYB048AJT10XNAAJA, RGEAYB060AJT10XNAAJA |
| **AE-104572-01** | Frame - Coil Front Support | 1 | | RGEAYB024AJT06XNAAJA, RGEAYB030AJT06XNAAJA, RGEAYB036AJT06XNAAJA, RGEAYB036AJT08XNAAJA |
| **AE-104572-02** | Frame - Coil Front Support | 1 | | RGEAYB042AJT08XNAAJA, RGEAYB048AJT08XNAAJA, RGEAYB048AJT10XNAAJA, RGEAYB060AJT10XNAAJA |
| **AS-108812-02** | Frame - Coil Front Support Assembly (Short) | 1 | | RGEAYB024AJT06XNAAJA, RGEAYB030AJT06XNAAJA, RGEAYB036AJT06XNAAJA, RGEAYB036AJT08XNAAJA |
| **AS-108812-05** | Frame - Coil Front Support Assembly (Tall) | 1 | | RGEAYB042AJT08XNAAJA, RGEAYB048AJT08XNAAJA, RGEAYB048AJT10XNAAJA, RGEAYB060AJT10XNAAJA |
| **AE-104571-01** | Frame - Coil Top Air Stop | 1 | | RGEAYB024AJT06XNAAJA, RGEAYB030AJT06XNAAJA, RGEAYB036AJT06XNAAJA, RGEAYB036AJT08XNAAJA |
| **AE-104571-02** | Frame - Coil Top Air Stop | 1 | | RGEAYB042AJT08XNAAJA, RGEAYB048AJT08XNAAJA, RGEAYB048AJT10XNAAJA, RGEAYB060AJT10XNAAJA |
| **AS-108812-03** | Frame - Coil Top Air Stop Assembly (Short) | 1 | | RGEAYB024AJT06XNAAJA, RGEAYB030AJT06XNAAJA, RGEAYB036AJT06XNAAJA, RGEAYB036AJT08XNAAJA |
| **AS-108812-06** | Frame - Coil Top Air Stop Assembly (Tall) | 1 | | RGEAYB042AJT08XNAAJA, RGEAYB048AJT08XNAAJA, RGEAYB048AJT10XNAAJA, RGEAYB060AJT10XNAAJA |
| **AS-108822-01** | Front Base Pan Insulation Assembly | 1 | | All models |
| **68-23643-01** | Gasket | 1 | | All models |

| Part No. | Description | Qty | Replaced By | Fits Models |
|---|---|---|---|---|
| **68-42246-01** | Gasket - 1,250 ft. long x 1/8 in. thick x 1/2 in. wide | 2/3/4/6/7/8/9 | | All models |
| **68-42246-86** | Gasket - 15 ft. long x 1/8 in. thick x 3/4 in. wide | 6 | | All models |
| **68-23644-01** | Gasket - Collector Box | 1 | | All models |
| **68-23642-01** | Gasket - Fiberglass Rope | 2 | | All models |
| **68-22079-06** | Gasket - Neoprene (1/4 in. x 1/2 in.) | 3/4 | | All models |
| **68-22079-09** | Gasket - Neoprene (1/8 in. x 1 in.) | 2 | | All models |
| **68-22079-84** | Gasket - Neoprene (1/8 in. x 1/2 in.) - 100 ft. Roll | 1/2/5/6 | | All models |
| **68-22079-85** | Gasket - Neoprene (1/8 in. x 3/4 in.) - 100 ft. Roll | 3 | | RGEAYB042AJT08XNAAJA, RGEAYB048AJT08XNAAJA, RGEAYB048AJT10XNAAJA, RGEAYB060AJT10XNAAJA |
| **68-20243-02** | Gasket Stripping - 3/8 in. x 3/4 in. x 36 ft. roll | 3/4/5/6 | | All models |
| **68-20243-03** | Gasket Stripping - 3/8 in. x 3/4 in. x 50 ft. roll | 4 | | All models |
| **56-22114-01** | Grommet - Gas Pipe | 1 | | All models |
| **AE-59433-01** | Heat Exchanger Extension | 1 | OBSOLETE | RGEAYB042AJT08XNAAJA, RGEAYB048AJT08XNAAJA, RGEAYB048AJT10XNAAJA, RGEAYB060AJT10XNAAJA |
| **63-17189-03** | Hex Nut, 1/4-20, w/External Tooth Lock Washer | 1 | | All models |
| **AE-58590-01** | HXC Tube Support | 1 | | All models |
| **68-20185-01** | Insulation | 1 | | All models |
| **68-23635-22** | Insulation - Access Panel | 1 | | RGEAYB024AJT06XNAAJA, RGEAYB030AJT06XNAAJA, RGEAYB036AJT06XNAAJA, RGEAYB036AJT08XNAAJA |
| **68-23635-30** | Insulation - Blower Access Panel | 1 | | RGEAYB042AJT08XNAAJA, RGEAYB048AJT08XNAAJA, RGEAYB048AJT10XNAAJA, RGEAYB060AJT10XNAAJA |
| **68-23635-08** | Insulation - Blower Shelf | 1 | | All models |
| **68-23635-50** | Insulation - Mounting Panel | 1 | | RGEAYB024AJT06XNAAJA, RGEAYB030AJT06XNAAJA, RGEAYB036AJT06XNAAJA |
| **68-23635-51** | Insulation - Mounting Panel | 1 | | RGEAYB036AJT08XNAAJA, RGEAYB042AJT08XNAAJA, RGEAYB048AJT08XNAAJA, RGEAYB048AJT10XNAAJA, RGEAYB060AJT10XNAAJA |
| **68-23635-09** | Insulation - Shelf Transition | 1 | | All models |
| **64-25340-02** | Locking Wing Push Mount Tie | 1 | | All models |
| **AS-108815-01HT** | Louver Panel Assembly (Short) | 1 | | RGEAYB024AJT06XNAAJA, RGEAYB030AJT06XNAAJA, RGEAYB036AJT06XNAAJA, RGEAYB036AJT08XNAAJA |
| **AS-108815-02HT** | Louver Panel Assembly (Tall) | 1 | | RGEAYB042AJT08XNAAJA, RGEAYB048AJT08XNAAJA, RGEAYB048AJT10XNAAJA, RGEAYB060AJT10XNAAJA |
| **81-109239-01** | Manifold Assembly | 1 | | All models |
| **AS-104387-05K** | Micro Channel Evaporator Coil - Gasket Assembly | 1 | | RGEAYB042AJT08XNAAJA, RGEAYB048AJT08XNAAJA, RGEAYB048AJT10XNAAJA |
| **65-104387-04K** | Micro Channel Evaporator Coil Kit | 1 | | RGEAYB024AJT06XNAAJA, RGEAYB030AJT06XNAAJA, RGEAYB036AJT06XNAAJA, RGEAYB036AJT08XNAAJA |
| **75-109244-01** | NOx Insert Assembly | 2/3 | | All models |
| **10-58570-09HT** | Panel | 1 | | RGEAYB042AJT08XNAAJA, RGEAYB048AJT08XNAAJA, RGEAYB048AJT10XNAAJA, RGEAYB060AJT10XNAAJA |

| Part No. | Description | Qty | Replaced By | Fits Models |
|---|---|---|---|---|
| **AE-58570-09** | Panel | 1 | | RGEAYB042AJT08XNAAJA, RGEAYB048AJT08XNAAJA, RGEAYB048AJT10XNAAJA, RGEAYB060AJT10XNAAJA |
| **AE-58574-10** | Panel - HXC Mounting (3 Burner) | 1 | | RGEAYB024AJT06XNAAJA, RGEAYB030AJT06XNAAJA, RGEAYB036AJT06XNAAJA |
| **AE-58574-11** | Panel - HXC Mounting (4 Burner) | 1 | | RGEAYB036AJT08XNAAJA, RGEAYB042AJT08XNAAJA, RGEAYB048AJT08XNAAJA |
| **AE-58574-12** | Panel - HXC Mounting (5 Burner) | 1 | | RGEAYB048AJT10XNAAJA, RGEAYB060AJT10XNAAJA |
| **81-23593-01** | Plug - Pipe Fitting (1/8 in.) | 1 | | RGEAYB024AJT06XNAAJA, RGEAYB030AJT06XNAAJA, RGEAYB036AJT06XNAAJA, RGEAYB036AJT08XNAAJA, RGEAYB042AJT08XNAAJA, RGEAYB048AJT08XNAAJA |
| **68-42246-04** | Poron Gasket 1/8" X 1/2" X 12 Ft Roll | 12 | | All models |
| **68-23603-01** | PVC Trap | 1 | | All models |
| **AS-108836-01HT** | Return Duct Cover Insulation Assembly | 1 | | All models |
| **63-20072-05** | Screw | 3 | | All models |
| **AE-109647-01** | Sensor Mounting Bracket | 1 | | RGEAYB042AJT08XNAAJA, RGEAYB048AJT08XNAAJA, RGEAYB048AJT10XNAAJA, RGEAYB060AJT10XNAAJA |
| **63-42112-09** | Sheet Metal Screw w/ Gasket, 8-18 x 1 in. | 1/2/3/4/5/12 | | All models |
| **63-42112-07** | Sheet Metal Screw w/ Gasket, 8-18 x 5/8 in. | 11/13 | | All models |
| **63-42109-06** | Sheet Metal Screw, 10-16 x 1-1/4 in. | 4 | | All models |
| **63-42109-03** | Sheet Metal Screw, 10-16 x 5/8 in. | 2 | | All models |
| **63-24368-03** | Sheet Metal Screw, 8-18 x 1/2 in. | 1 | | All models |
| **63-24368-01** | Sheet Metal Screw, 8-18 x 1/4 in. | 2 | | RGEAYB042AJT08XNAAJA, RGEAYB048AJT08XNAAJA, RGEAYB048AJT10XNAAJA, RGEAYB060AJT10XNAAJA |
| **63-22153-02** | Sheet Metal Screw, 8-18 x 7/8 in. | 1/2 | | All models |
| **AE-58595-01** | Shield - Radiation | 1 | | All models |
| **79-21491-83** | Silicone Rubber Tubing (18 in. long) | 1 | | All models |
| **79-21491-03** | Silicone Rubber Tubing (Bulk - Non-Salable) | 1 | | All models |
| **45-18515-01** | Snap-In Bushing - Conductor Protection | 1 | | All models |
| **63-22429-05** | Stainless Steel Sheet Metal Screw, 10-16 x 5/8 in. | 5 | | All models |
| **63-22429-01** | Stainless Steel Sheet Metal Screw, 8-18 x 1/2 in. | 1/2/3/4/5/6/8/9/10/15/16/24 | | All models |
| **68-21799-03** | Stripping - 1-3/8 in. x 1 ft. | 4 | | All models |
| **68-23618-81** | Stripping - 40 ft. Roll | 1/2/3 | | All models |
| **AS-108837-01HT** | Supply Duct Cover Insulation Assembly | 1 | | All models |
| **63-100404-06** | Thread-Forming Screw (black), 10-32 x 7/16 in. | 4 | | All models |
| **63-22487-01** | Thread-Forming Screw, 10-32 x 1/2 in. | 1 | | All models |
| **63-100404-03** | Thread-Forming Screw, 12-24 x 3/4 in. | 4 | | All models |
| **AS-108835-01HT** | Top Panel/Insulation Assembly | 1 | | All models |
| **AE-102207-05** | Transition | 1 | | RGEAYB024AJT06XNAAJA, RGEAYB030AJT06XNAAJA, RGEAYB036AJT06XNAAJA, RGEAYB036AJT08XNAAJA, RGEAYB042AJT08XNAAJA |

| Part No. | Description | Qty | Replaced By | Fits Models |
|---|---|---|---|---|
| **AE-102207-06** | Transition | 1 | | RGEAYB024AJT06XNAAJA, RGEAYB030AJT06XNAAJA, RGEAYB036AJT06XNAAJA, RGEAYB036AJT08XNAAJA, RGEAYB042AJT08XNAAJA |
| **AE-102207-13** | Transition | 1 | | RGEAYB048AJT08XNAAJA, RGEAYB048AJT10XNAAJA, RGEAYB060AJT10XNAAJA |
| **AE-102207-14** | Transition - Back | 1 | | RGEAYB048AJT08XNAAJA, RGEAYB048AJT10XNAAJA, RGEAYB060AJT10XNAAJA |
| **AE-58591-03** | Turbulator | 2/3 | | All models |
| **68-104464-18** | Venturi | 1 | | All models |
| **68-108461-01** | Water Block-Off | 1 | | All models |
| **64-17606-04** | Wire & Cable Tie - Nylon Black - 11-1/2 in. | 1/3 | | All models |
| **64-17606-06** | Wire & Cable Tie - Nylon Black - 7-1/2 in. | 1 | | All models |
| **64-17606-01** | Wire & Cable Tie - Nylon Black - 8 in. | 1 | | All models |