Rheem RHPAYB Package Unit Replacement Parts List

Parts list RP-RHM-RHPAYB | Updated Nov 2026 | 179 parts | 2 model numbers

Genuine Rheem OEM part numbers for the models listed below, compiled from Rheem Manufacturing's service parts catalog. Quantities are per unit. Where Rheem has replaced a part number, the current number is shown under Replaced By. Always confirm the full model and serial number of the unit before ordering.

Models covered

RHPAYB024AJT000NA, RHPAYB030AJT000NA

RHPAYB parts breakdown: ADS-105127-18A 10 Outdoor Coil 2-2.5 Ton

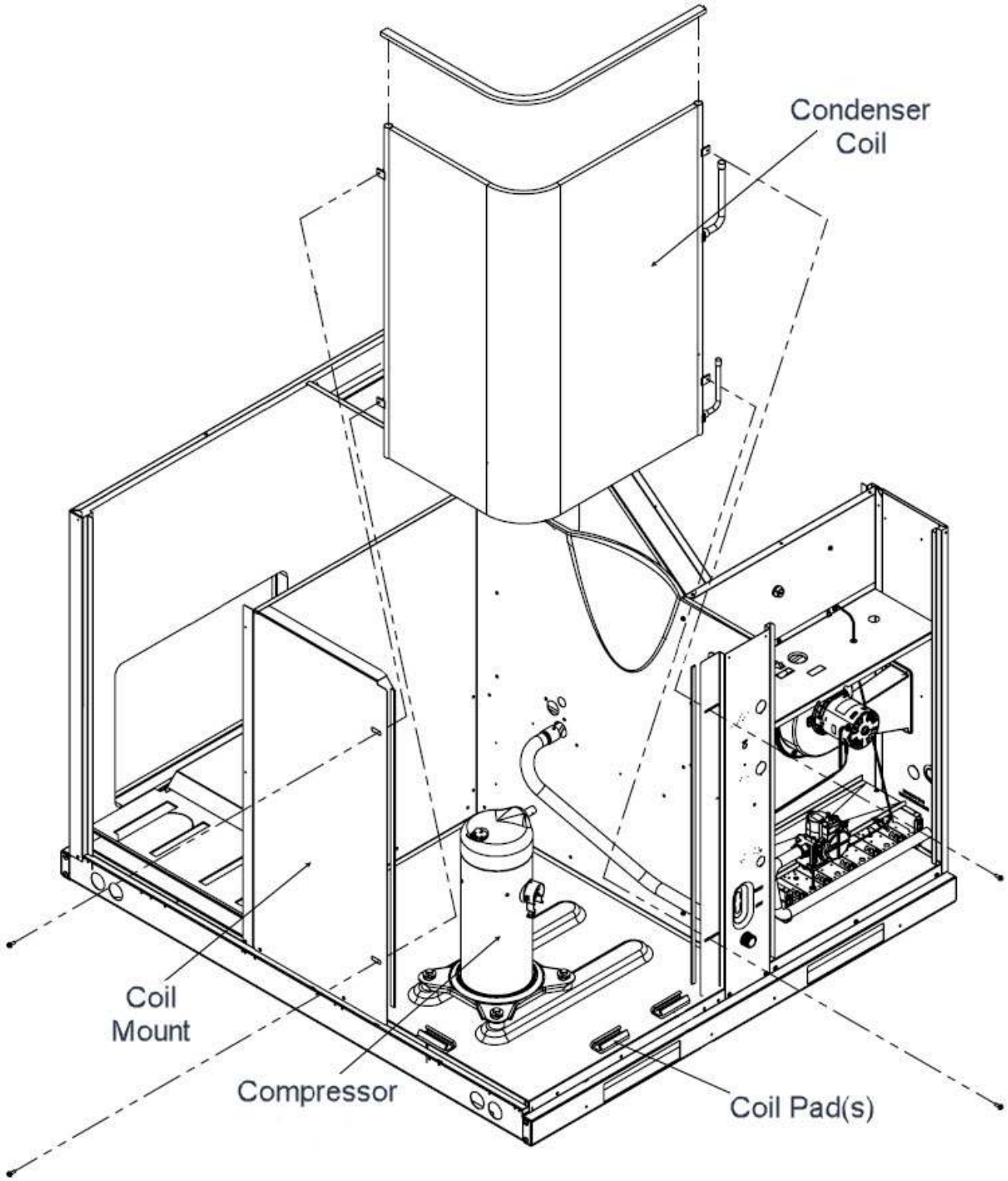

RHPAYB parts breakdown: ADS-105127-18A 11 Outdoor Coil 3-5 Ton

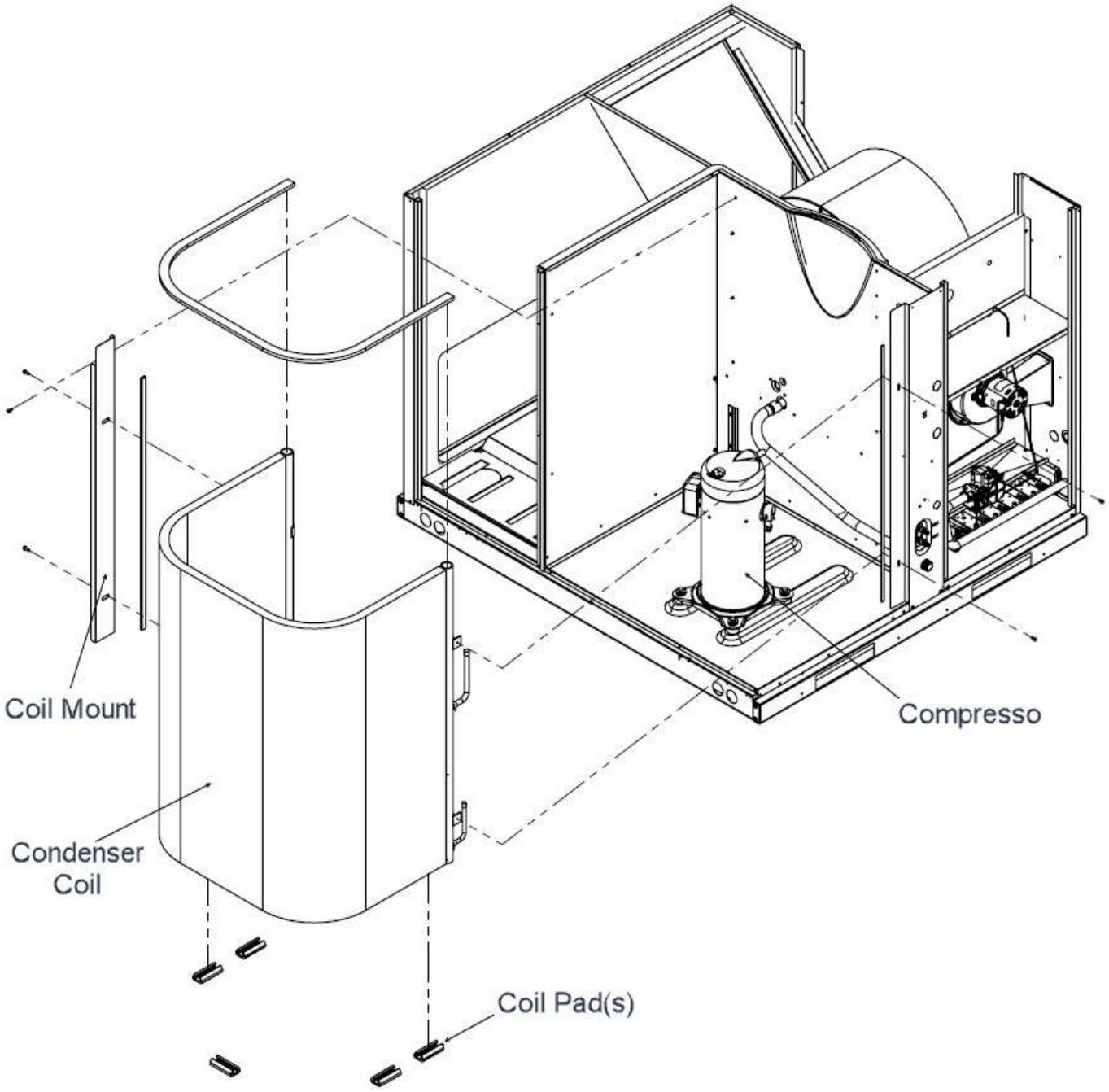

RHPAYB parts breakdown: ADS-105127-18A 12 Coil Frames 2C Drainpan

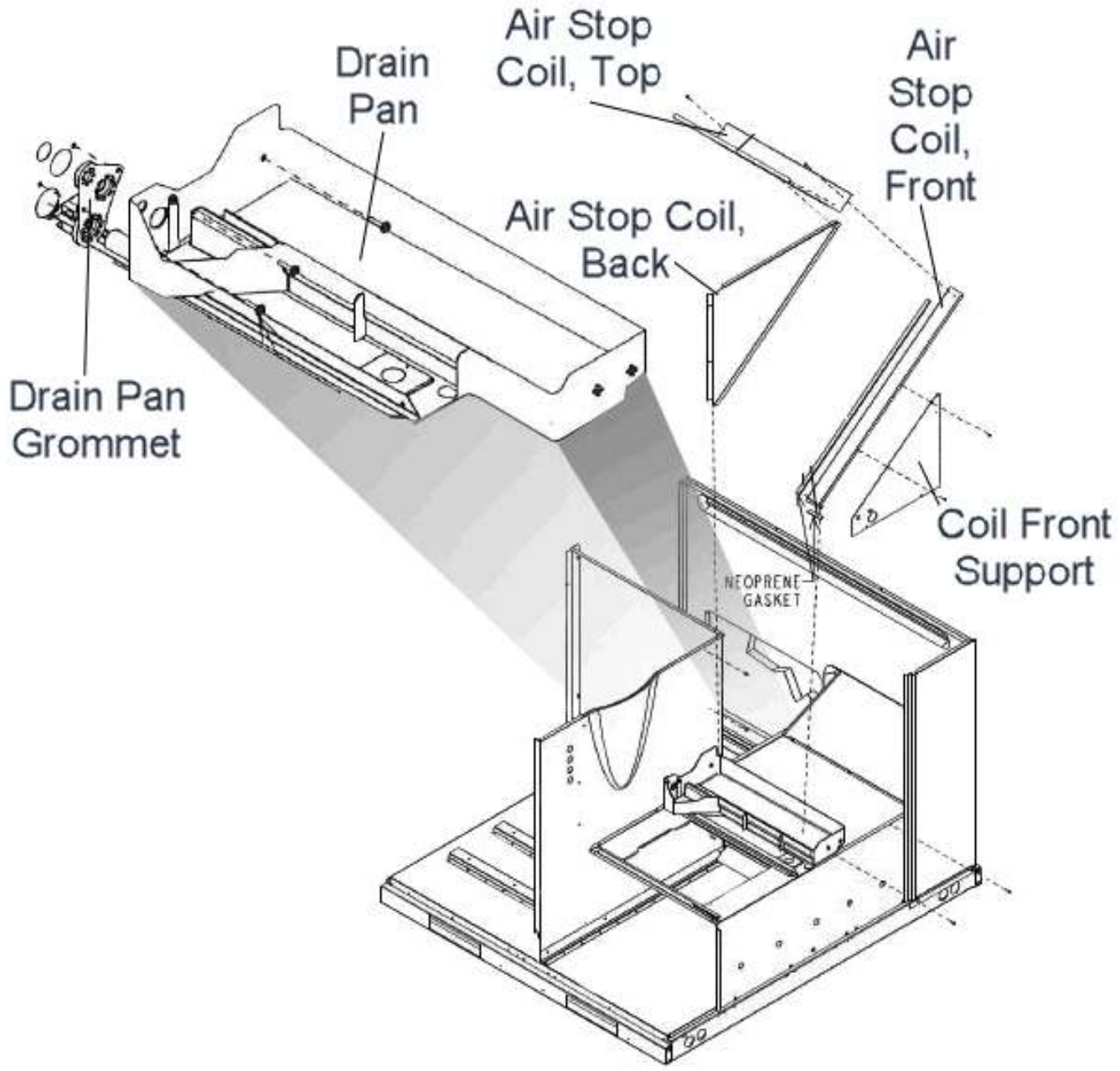

RHPAYB parts breakdown: ADS-105127-18A 13 Compressor View

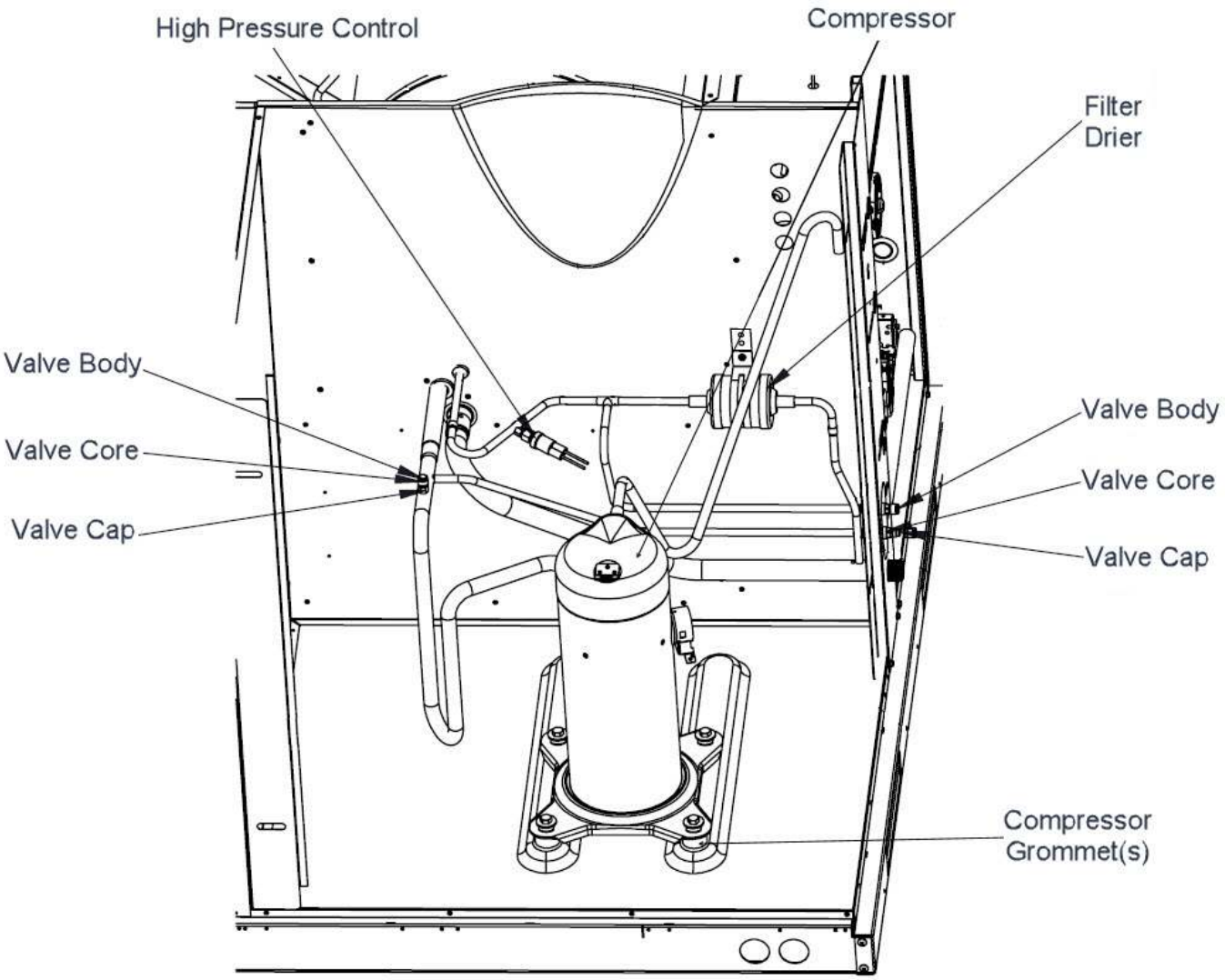

RHPAYB parts breakdown: ADS-105127-18A 14 Collector Box 2C Heat Exchanger

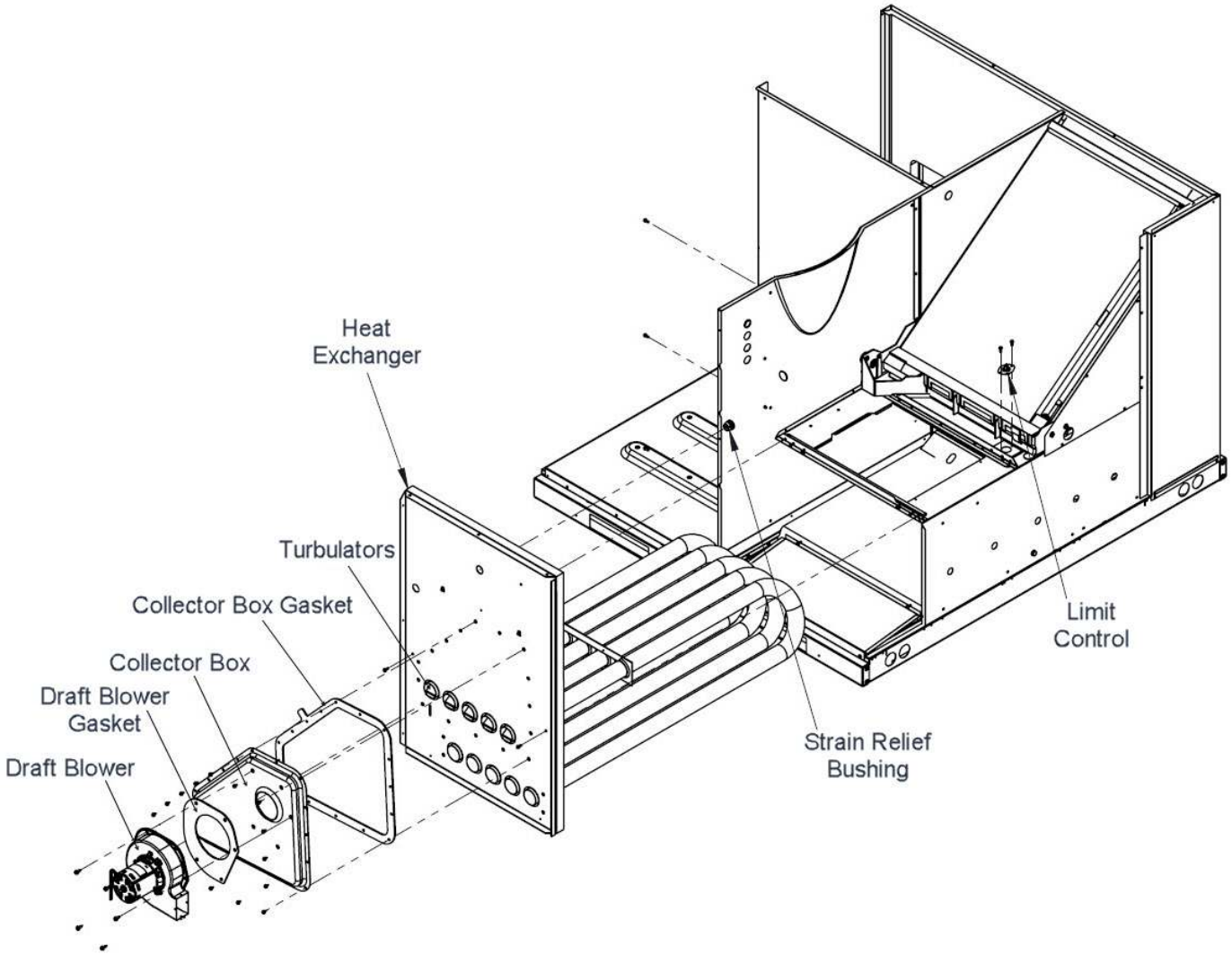

RHPAYB parts breakdown: ADS-105127-18A 15 Lox Nox Heat Exchanger

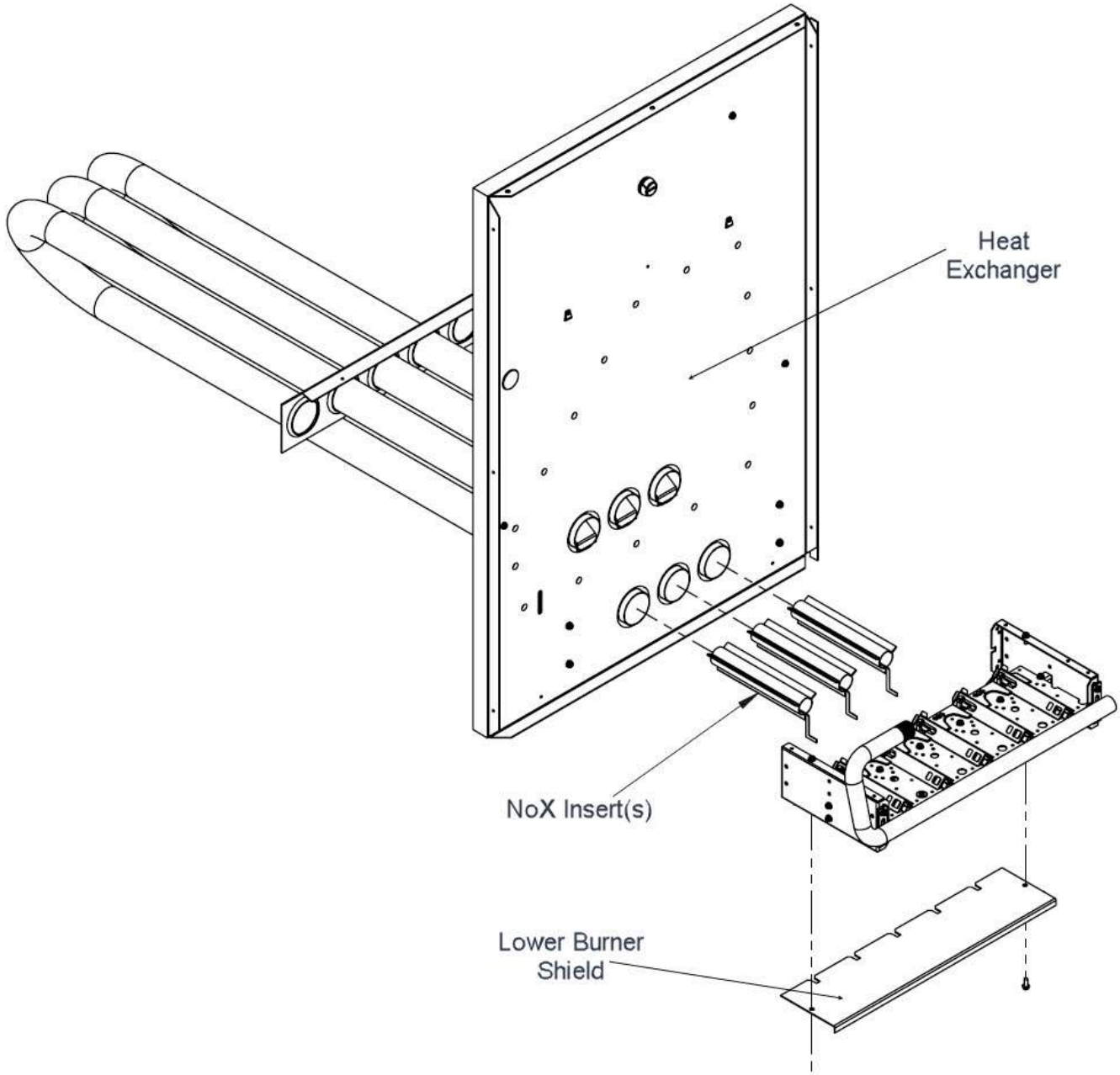

RHPAYB parts breakdown: ADS-105127-18A 1 Exterior Cabinet 281 29

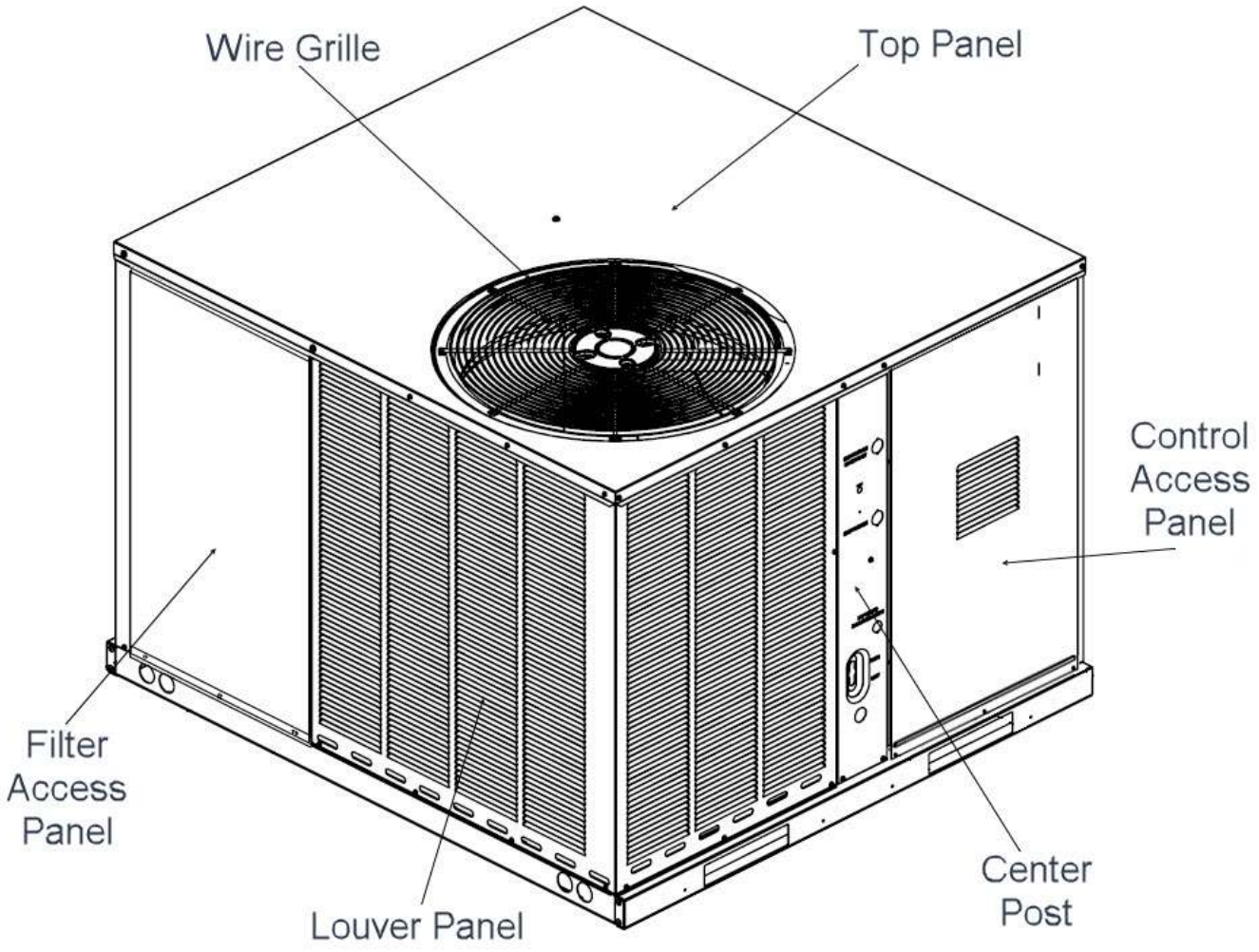

RHPAYB parts breakdown: ADS-105127-18A 2 Exterior Cabinet 282 29

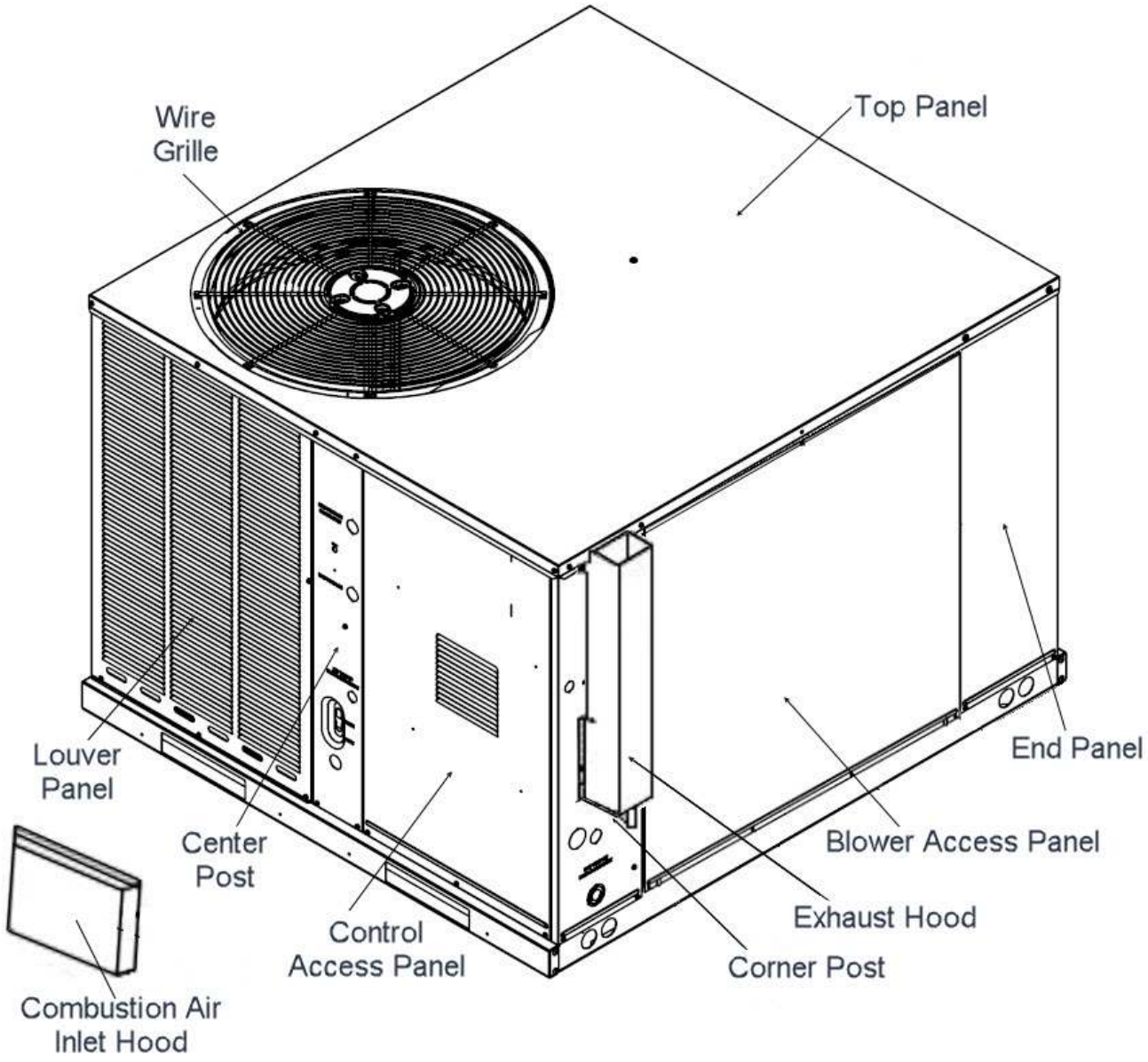

RHPAYB parts breakdown: ADS-105127-18A 3 Internal View 281 29

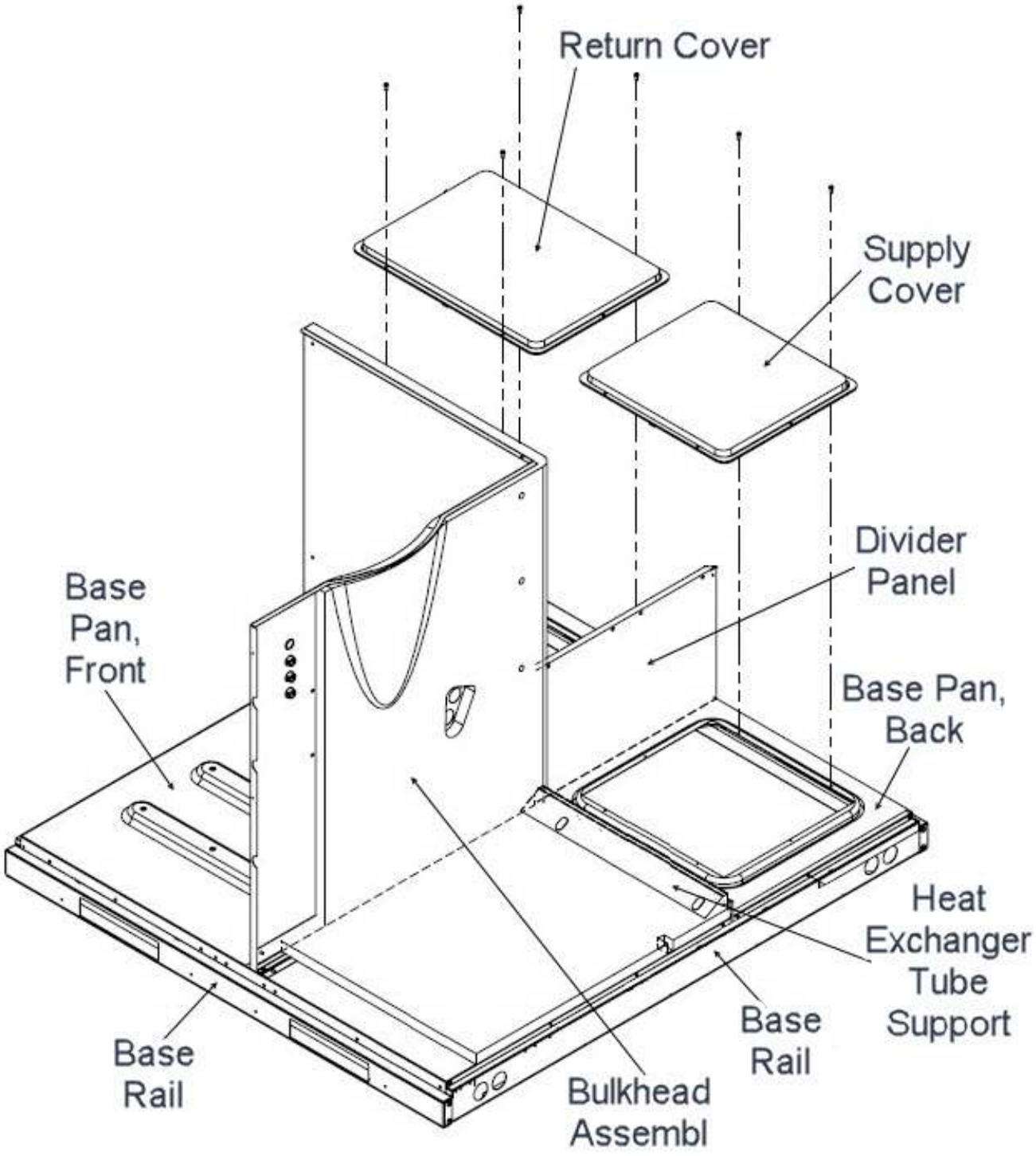

RHPAYB parts breakdown: ADS-105127-18A 4 Internal View 282 29

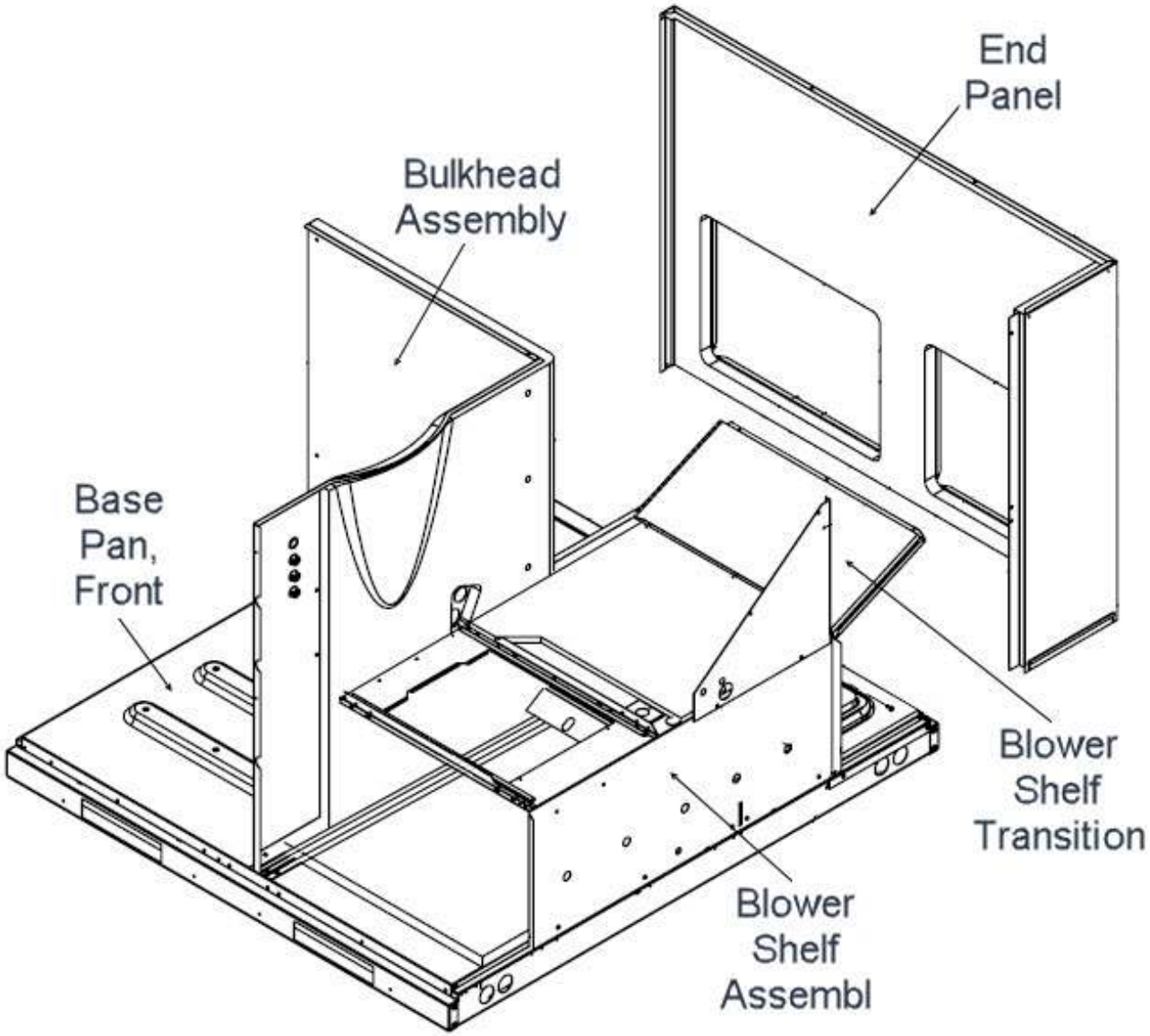

RHPAYB parts breakdown: ADS-105127-18A 5 Internal View 283 29

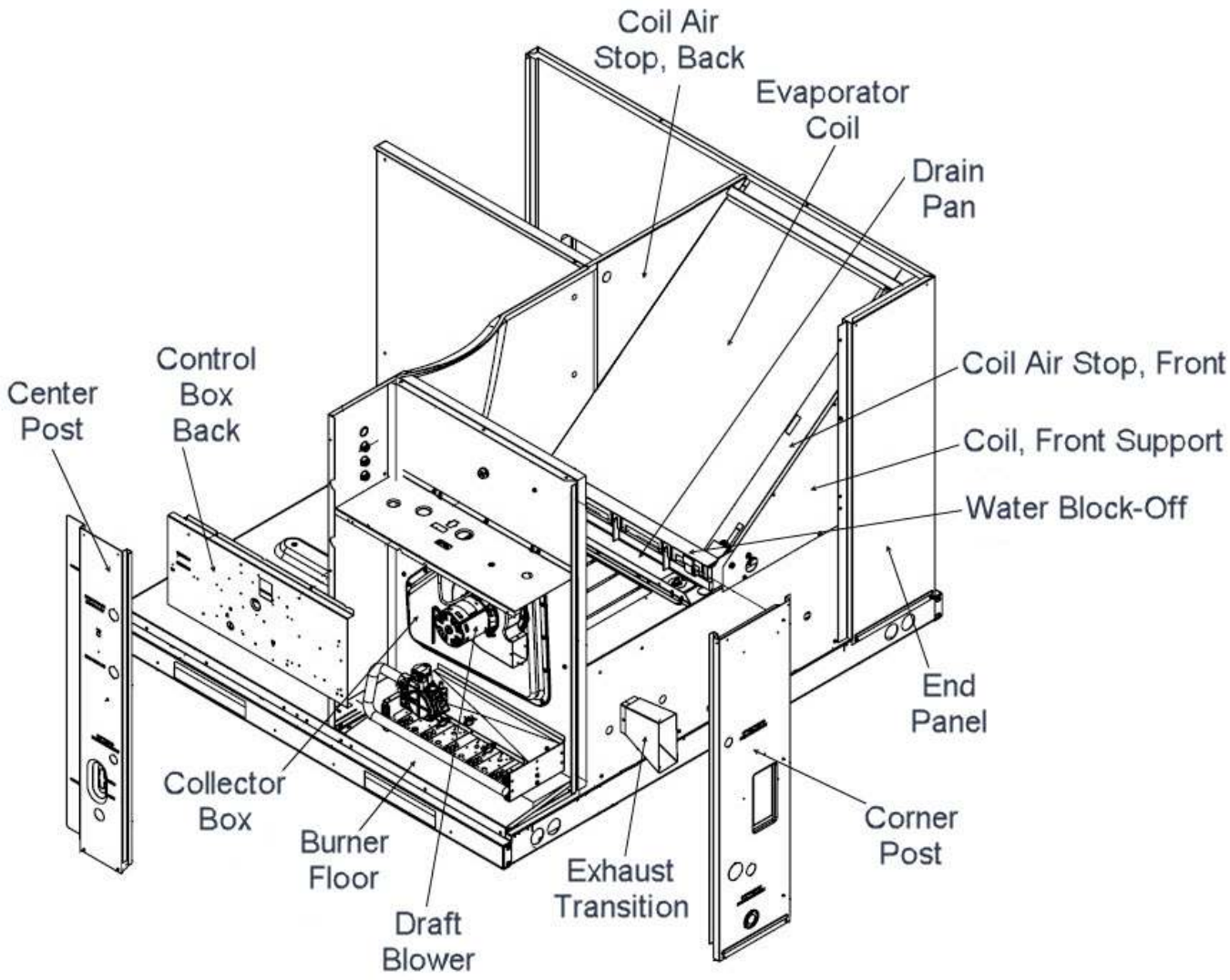

RHPAYB parts breakdown: ADS-105127-18A 7 Control Panel

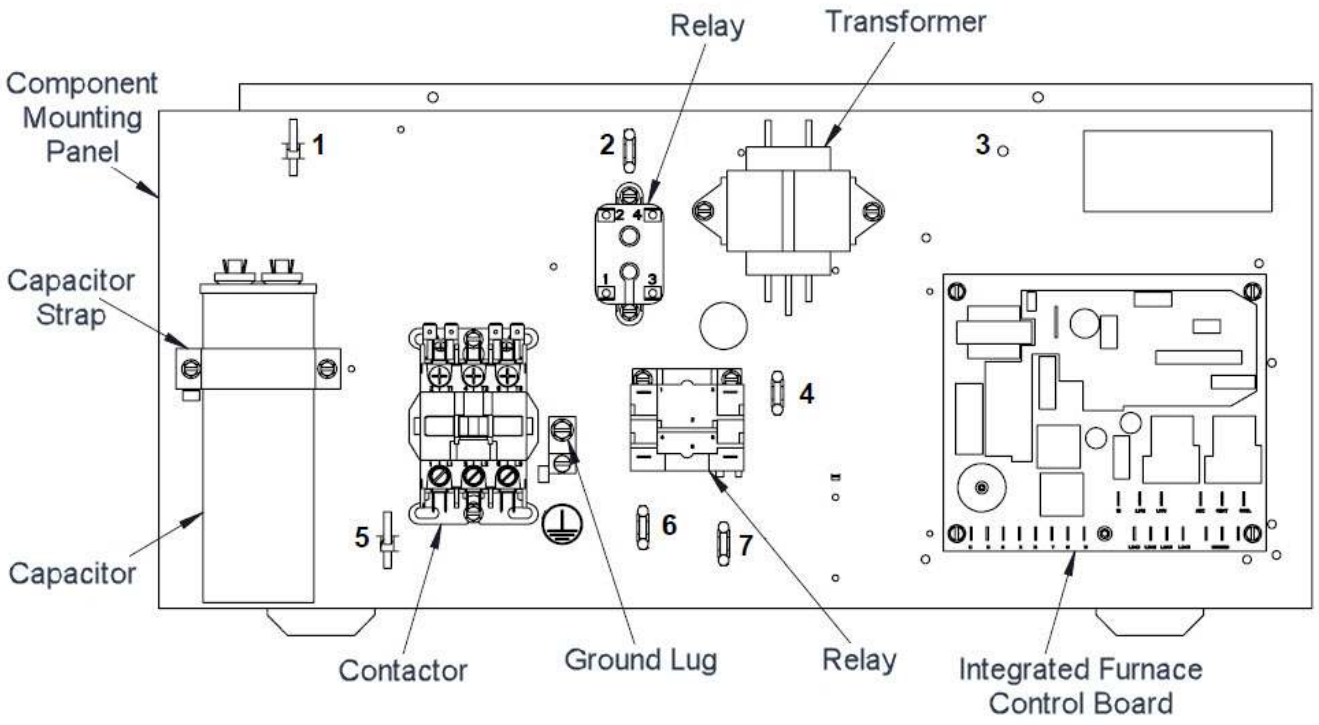

RHPAYB parts breakdown: ADS-105127-18A 8 Outdoor Fan

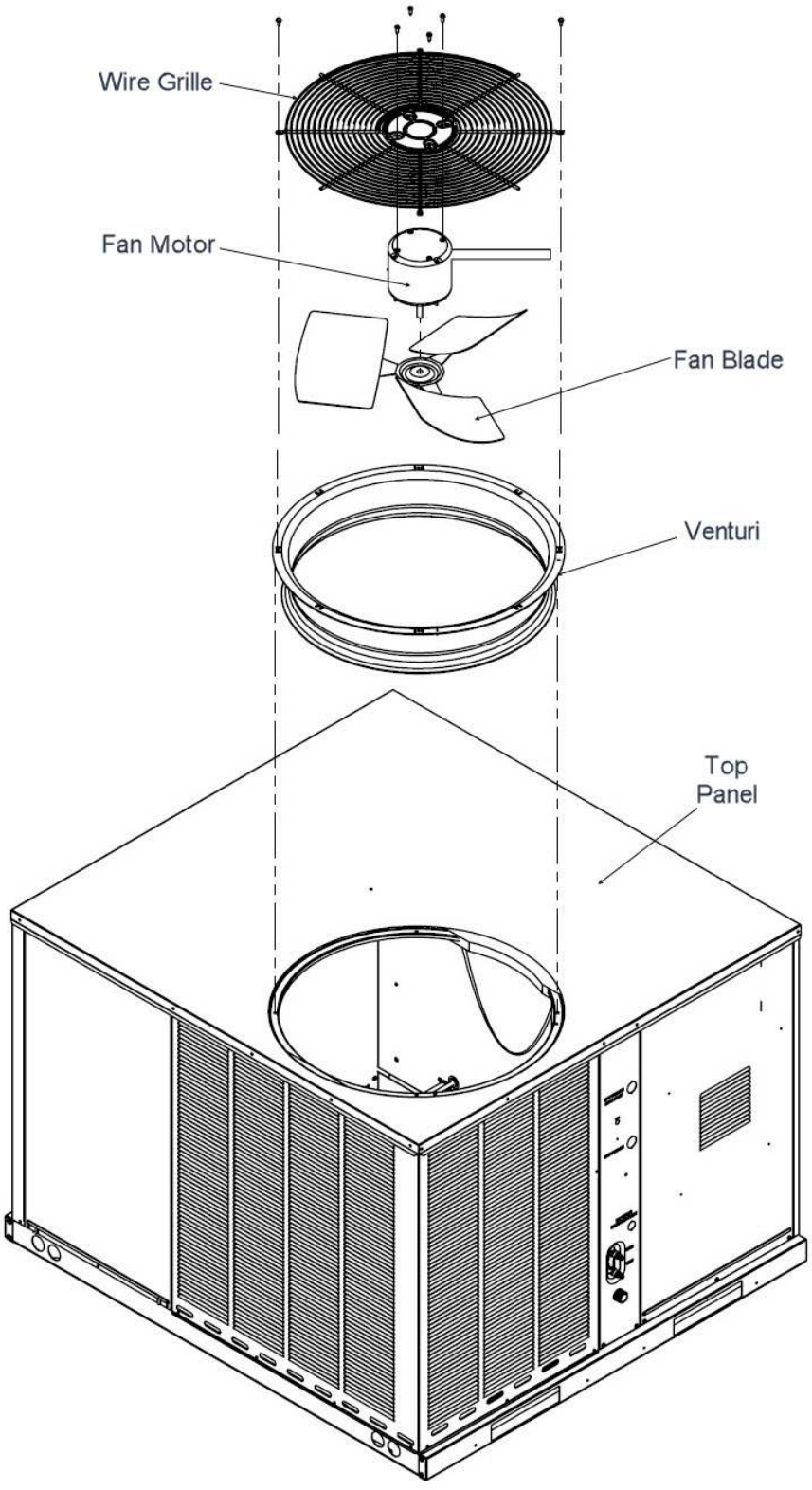

RHPAYB parts breakdown: ADS-105127-18A 9 Blower Assembly

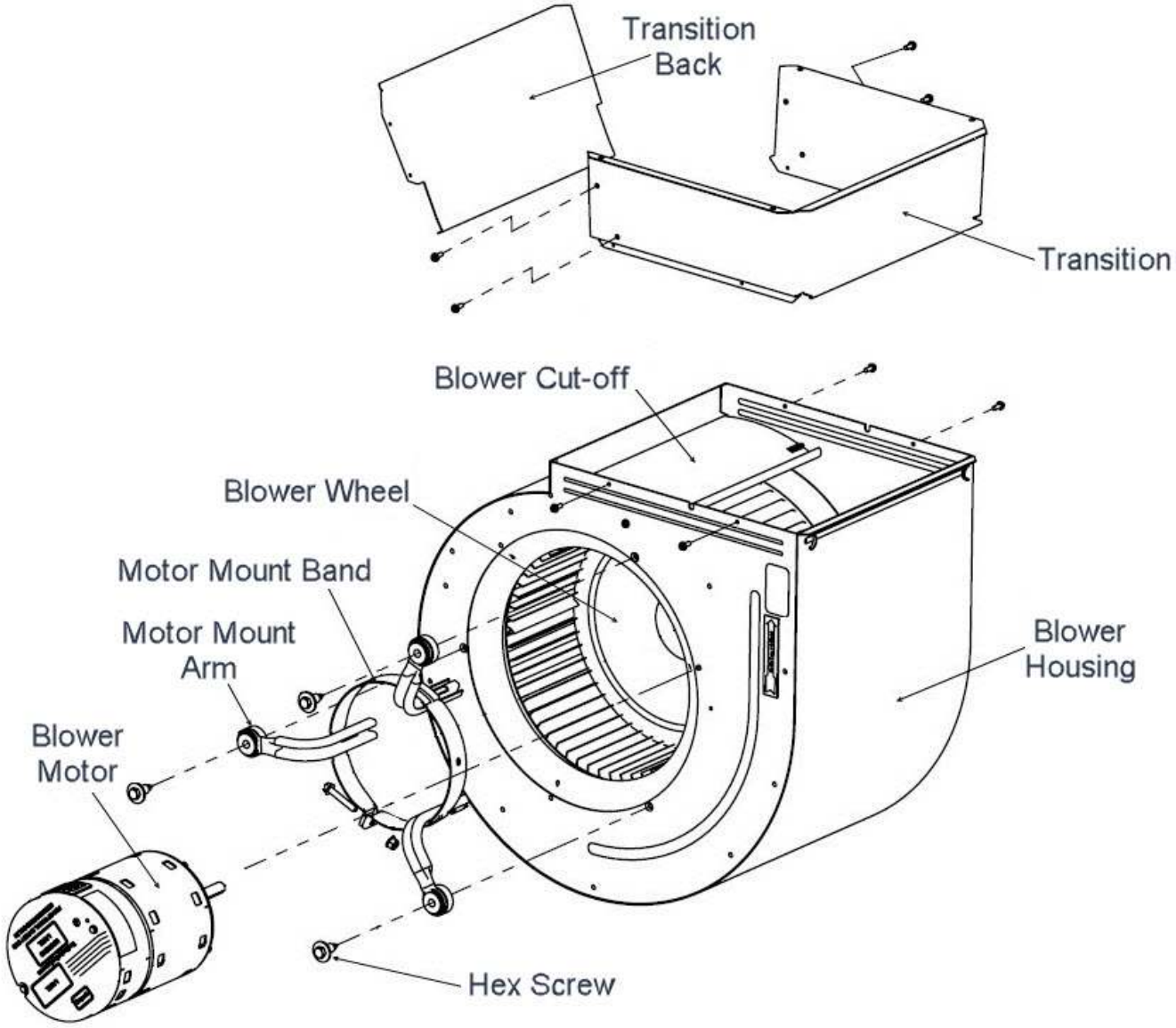

RHPAYB parts breakdown: ADS-105127-19A 16 Heating Compartment

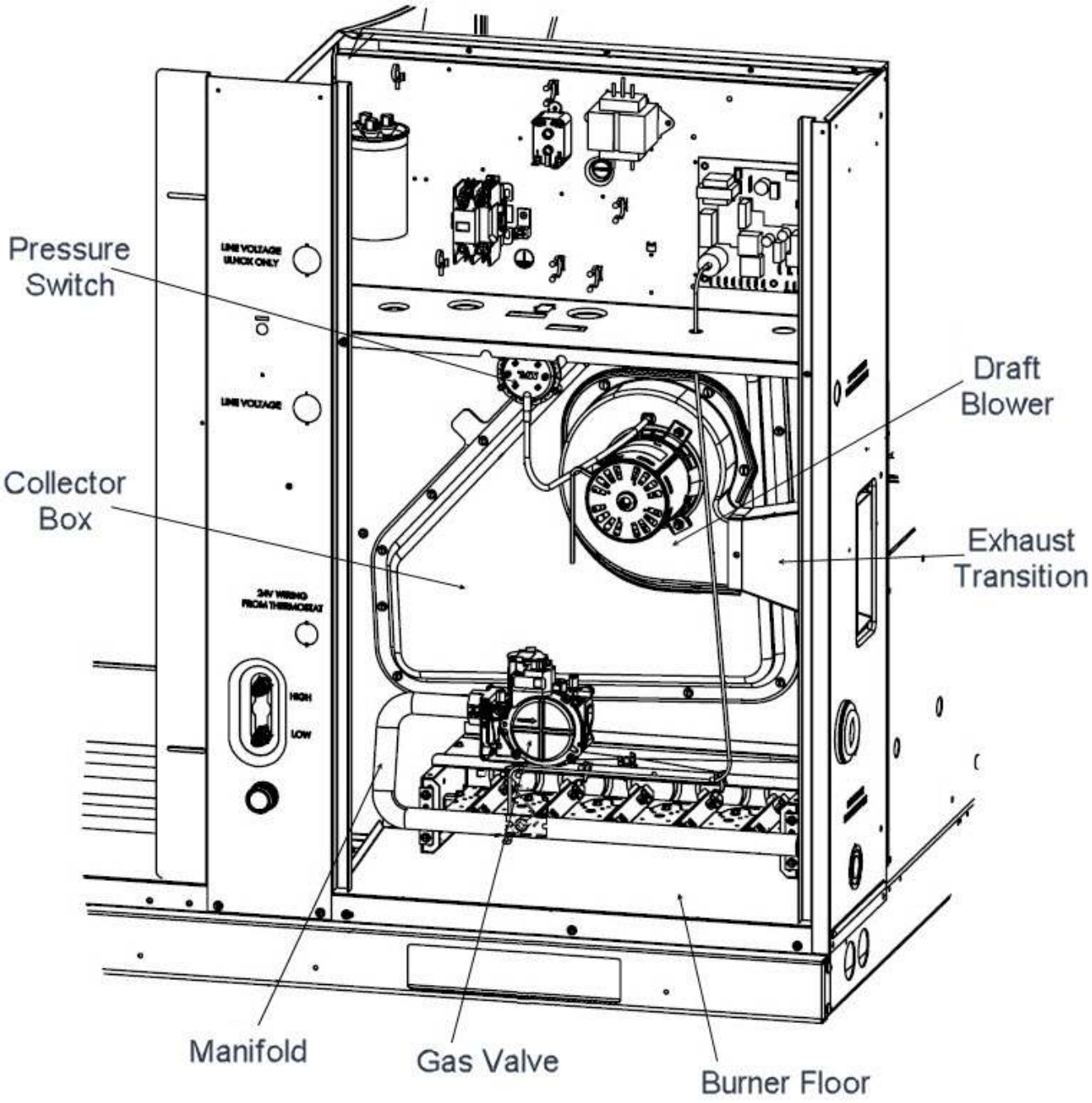

RHPAYB parts breakdown: ADS-105127-19A 17 Burner Assembly

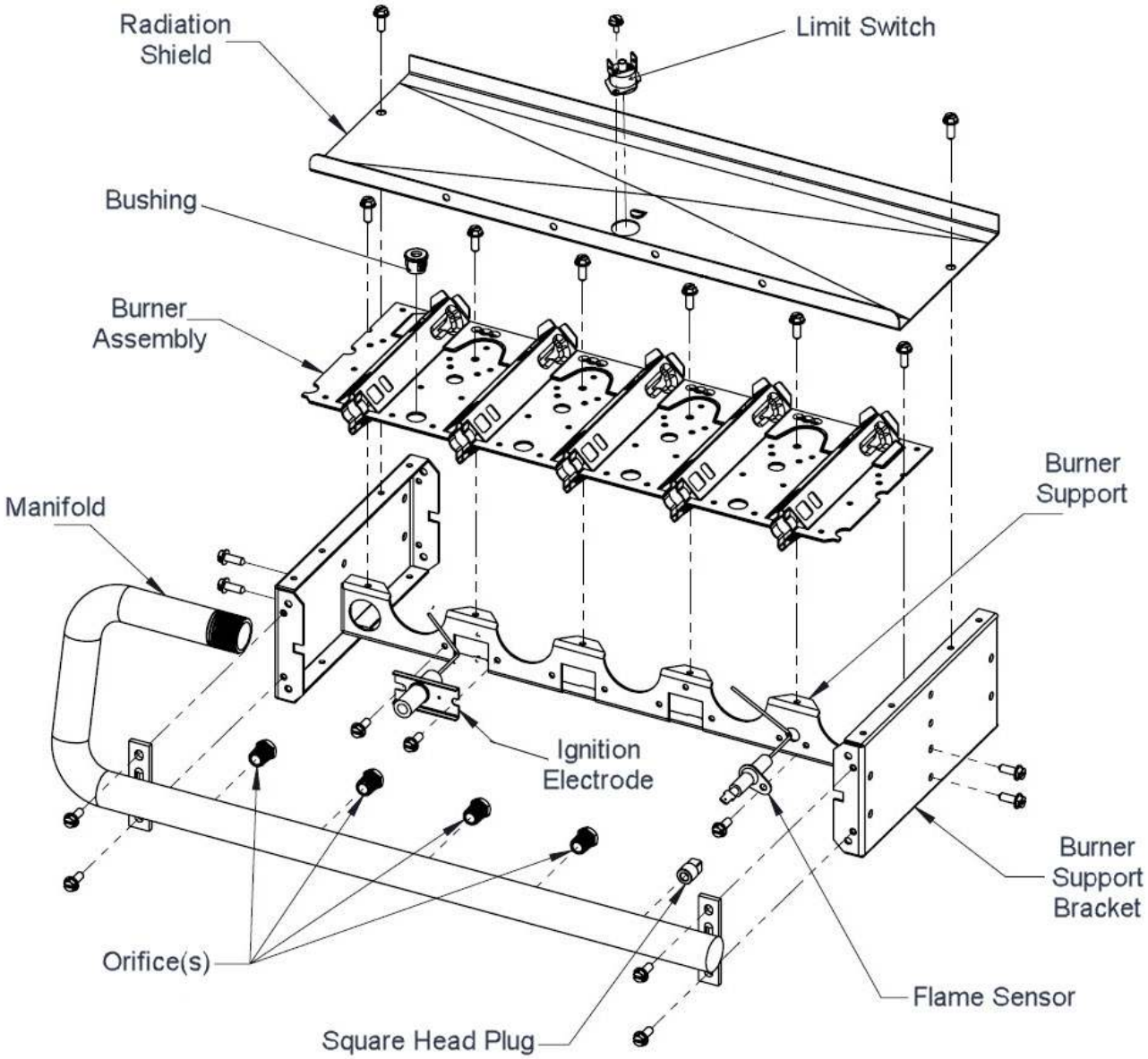

RHPAYB parts breakdown: ADS-105127-19A 6 Bulkhead Wiring Bushings

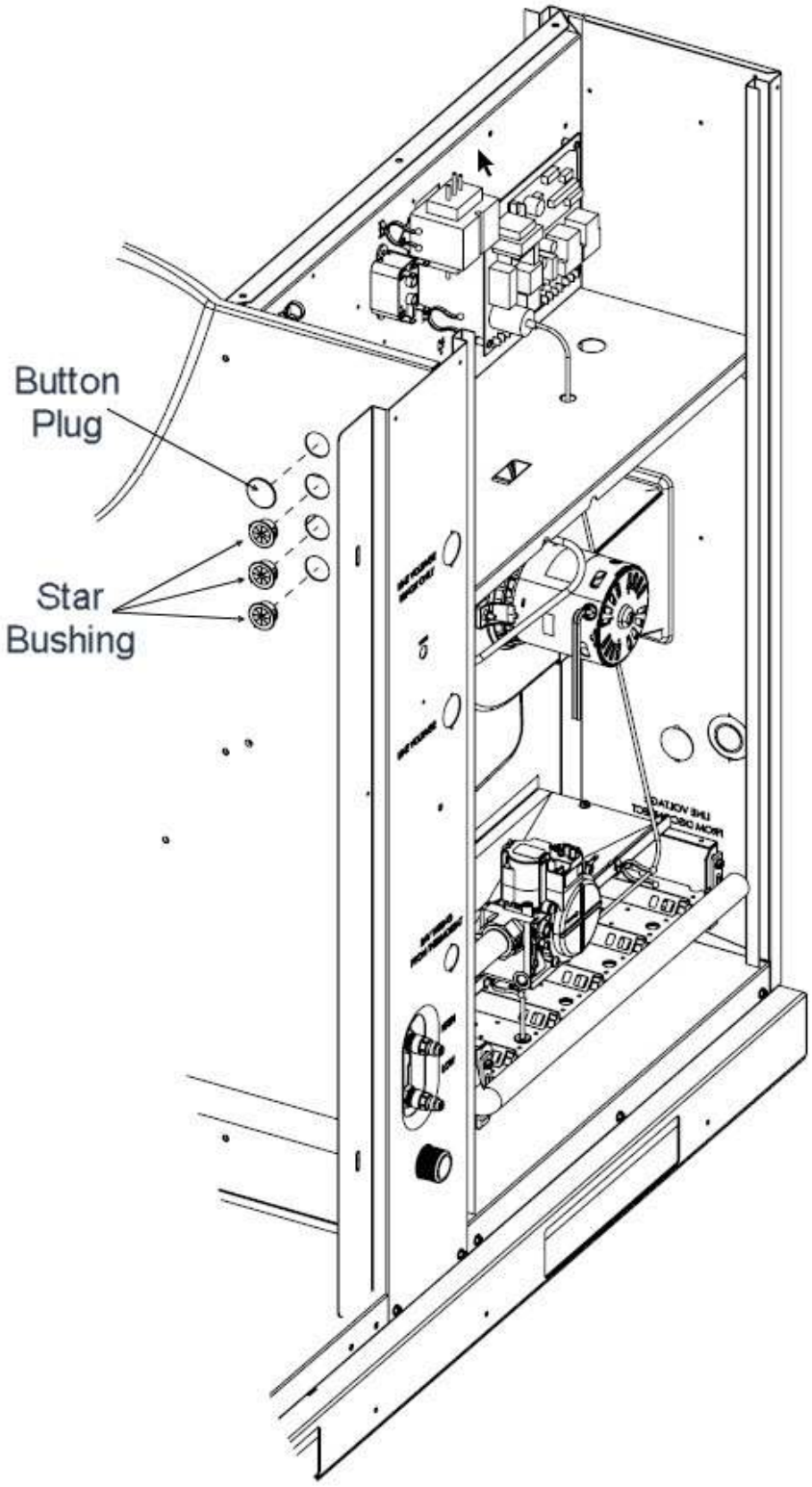

RHPAYB parts breakdown: ADS-105127-19A 7 Control Panel

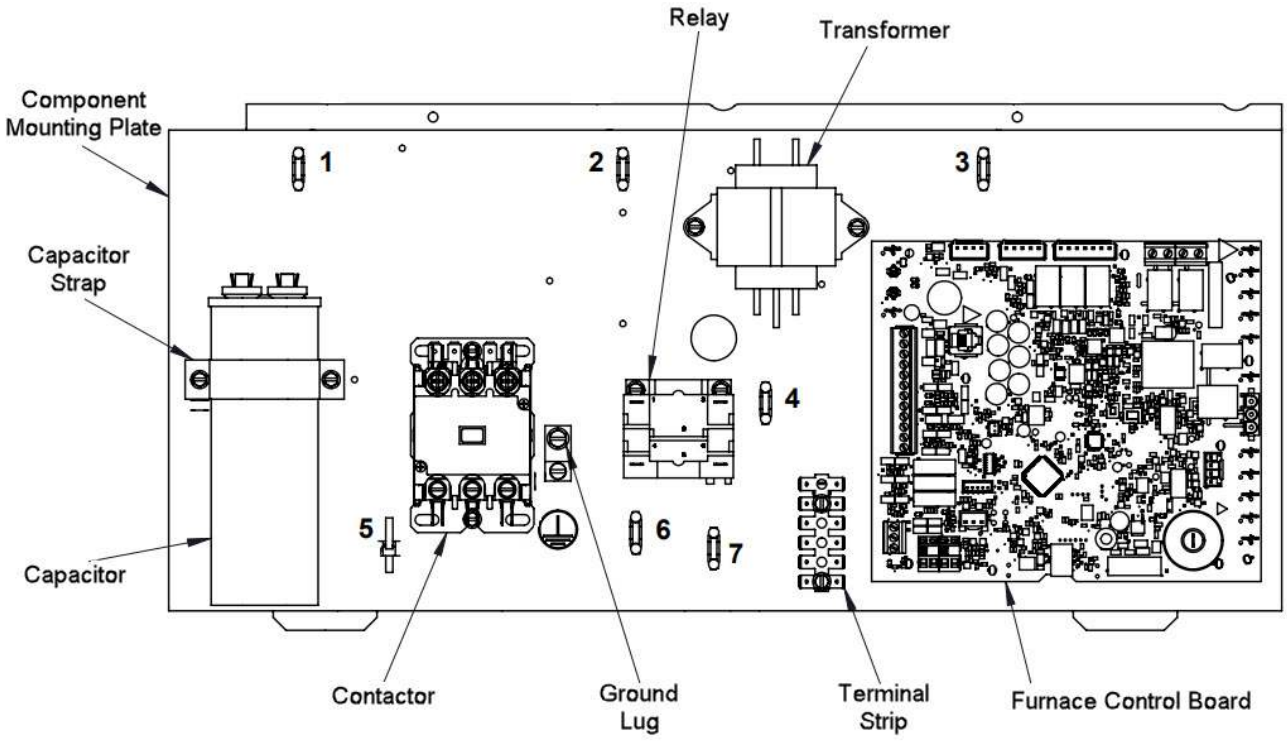

RHPAYB parts breakdown: ADS-105128-18A 10 Outdoor Coil 2-2.5 Ton

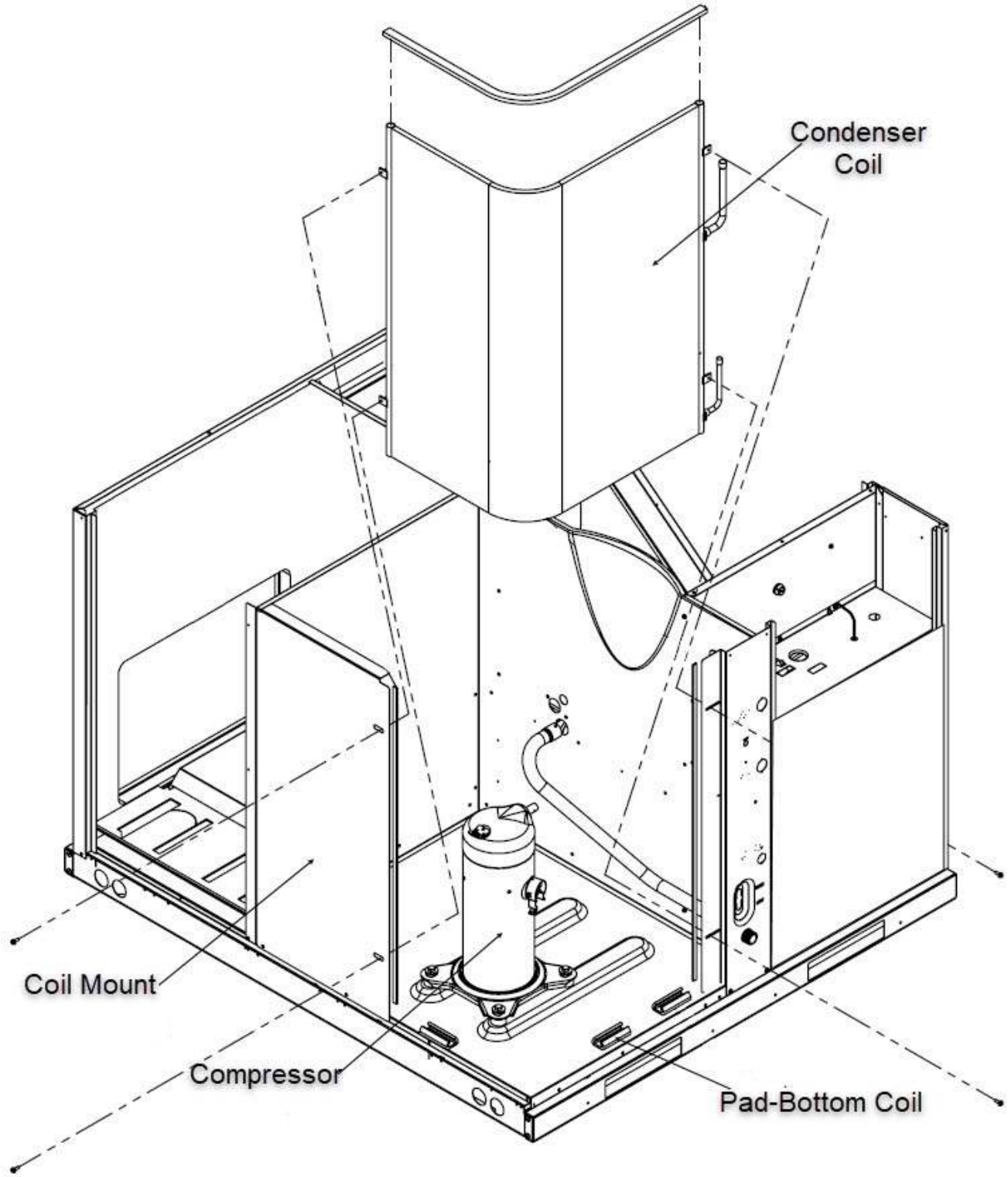

RHPAYB parts breakdown: ADS-105128-18A 12 Coil Frames Drainpan.

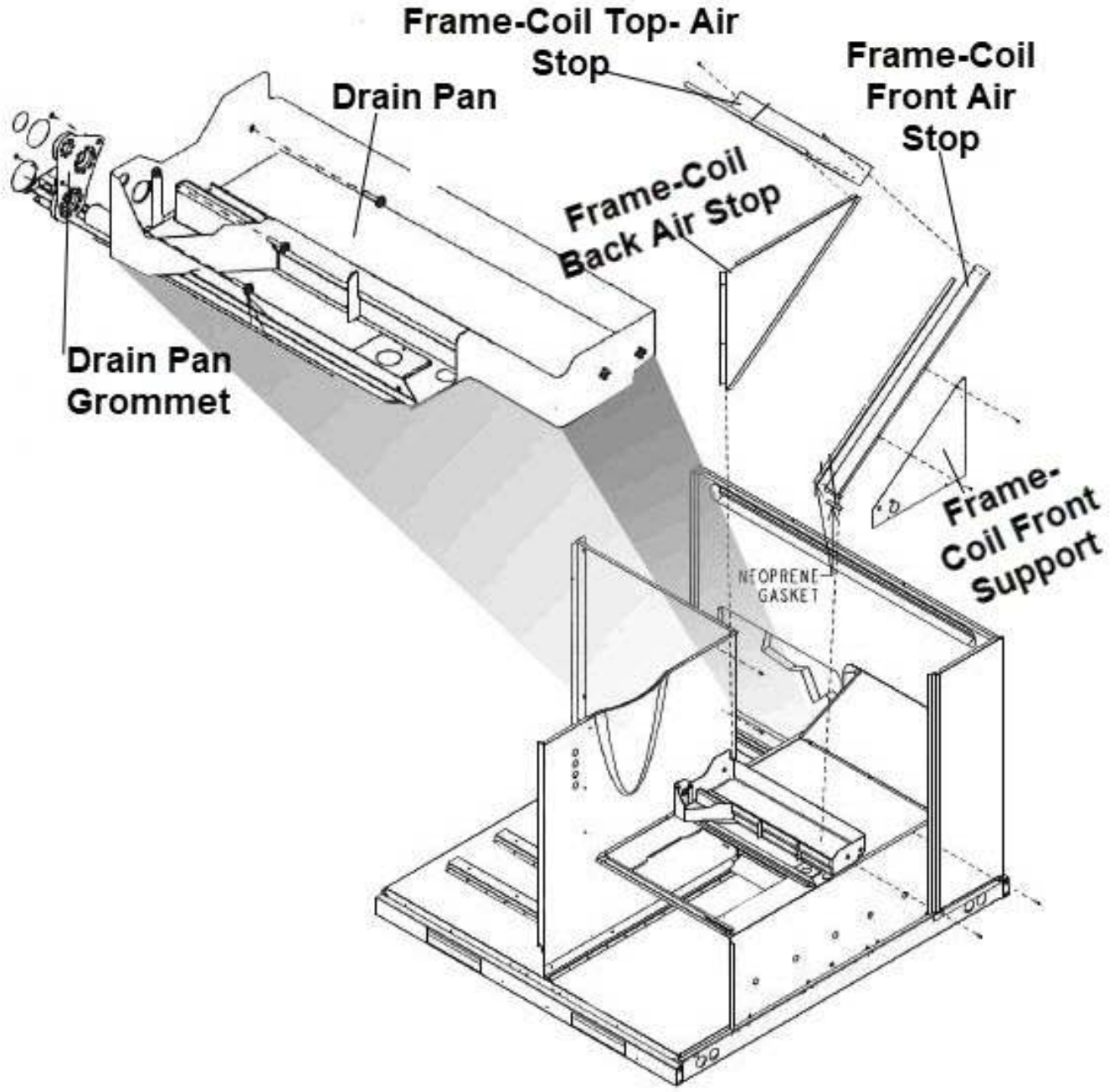

RHPAYB parts breakdown: ADS-105128-18A 13 Compressor View

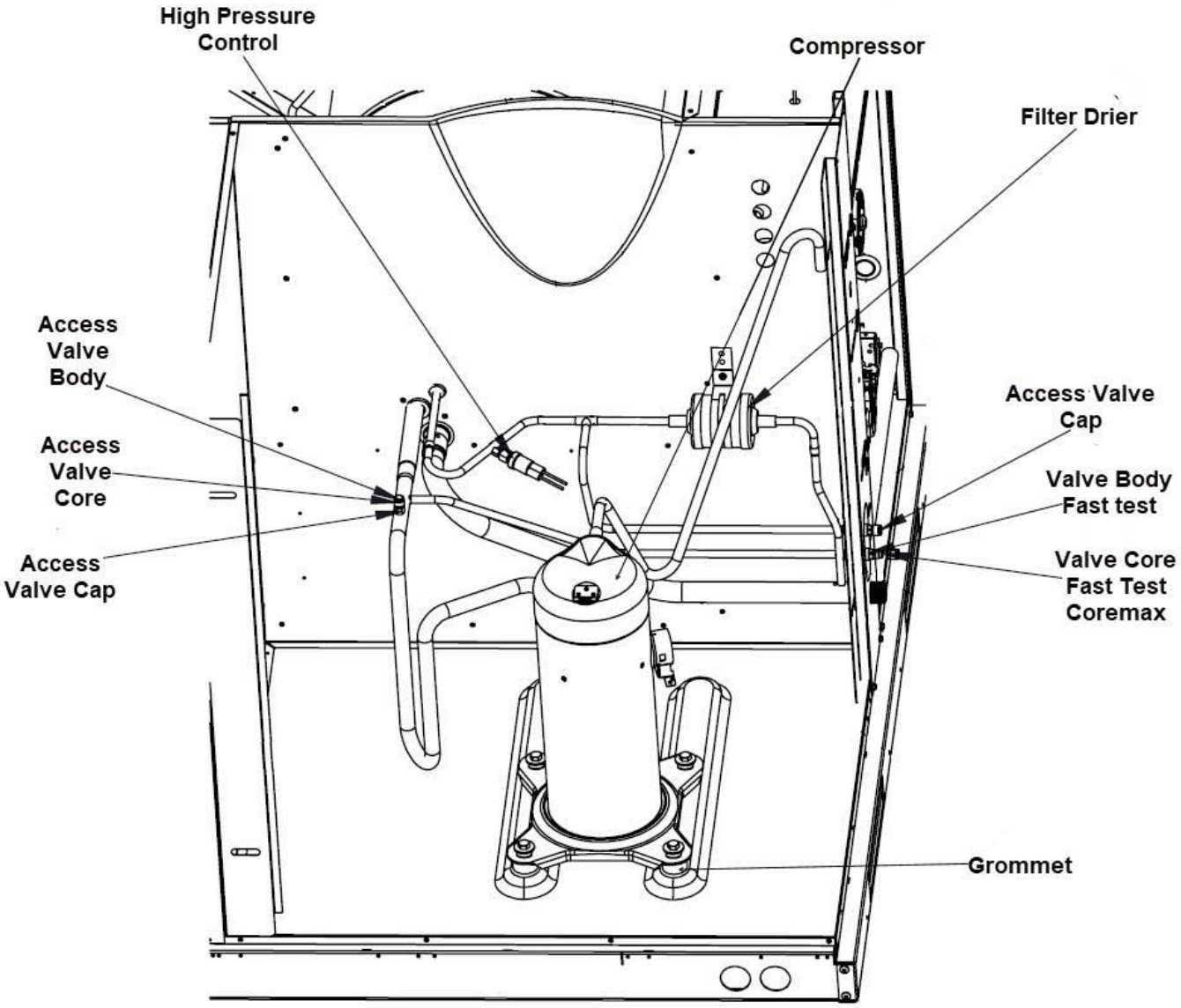

RHPAYB parts breakdown: ADS-105128-18A 1 Exterior Cabinet

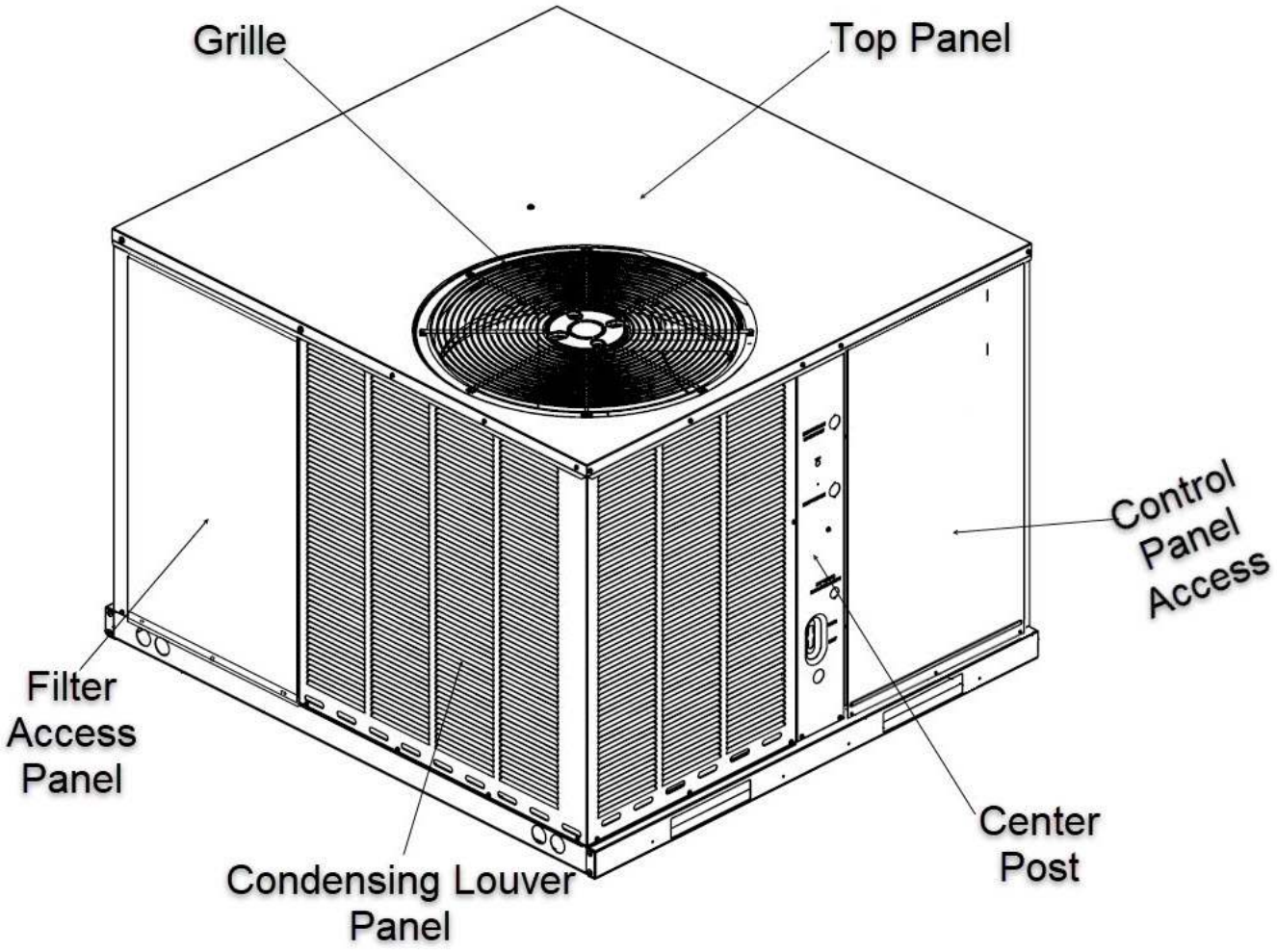

RHPAYB parts breakdown: ADS-105128-18A 2 Exterior Cabinet

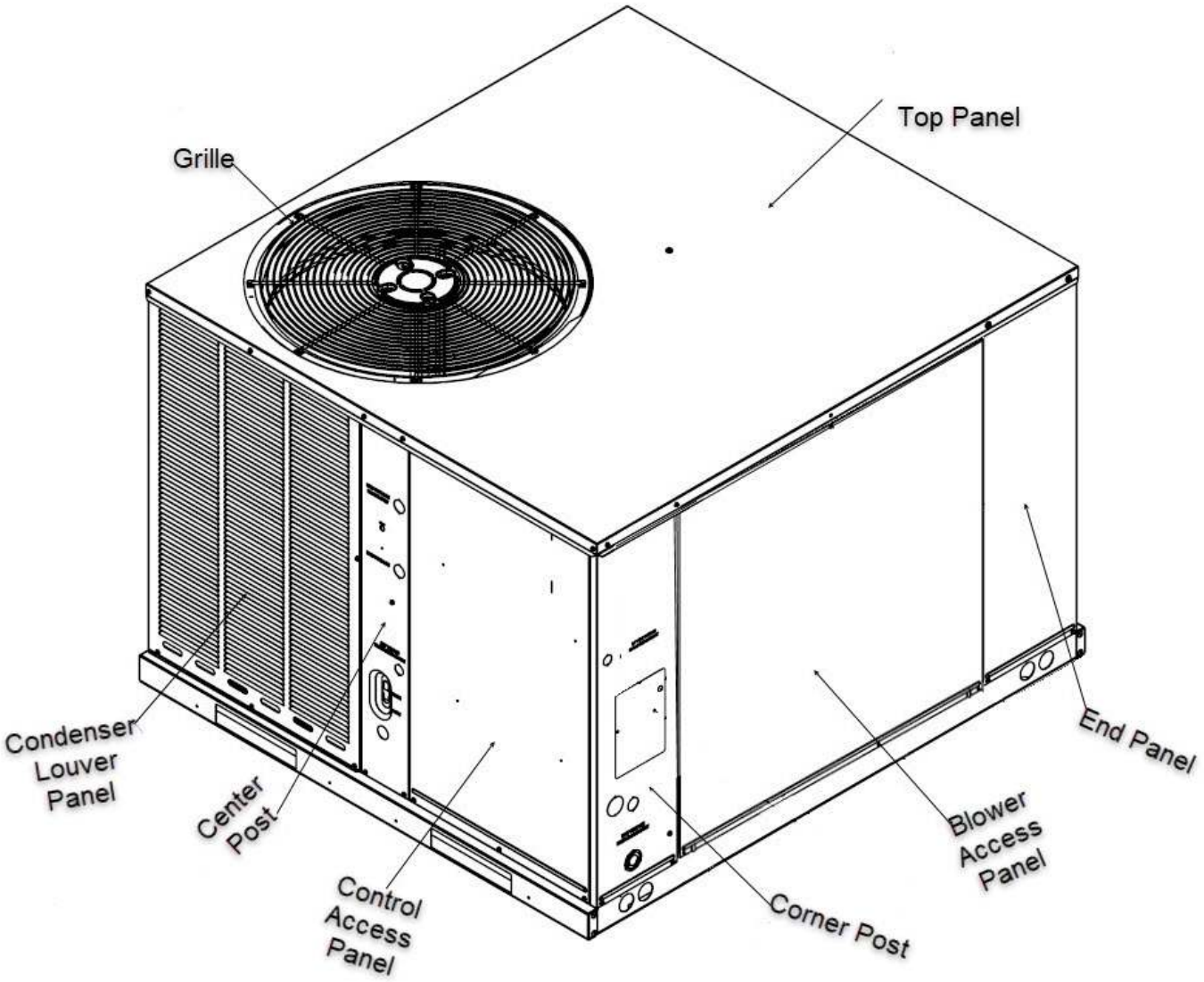

RHPAYB parts breakdown: ADS-105128-18A 3 Internal View

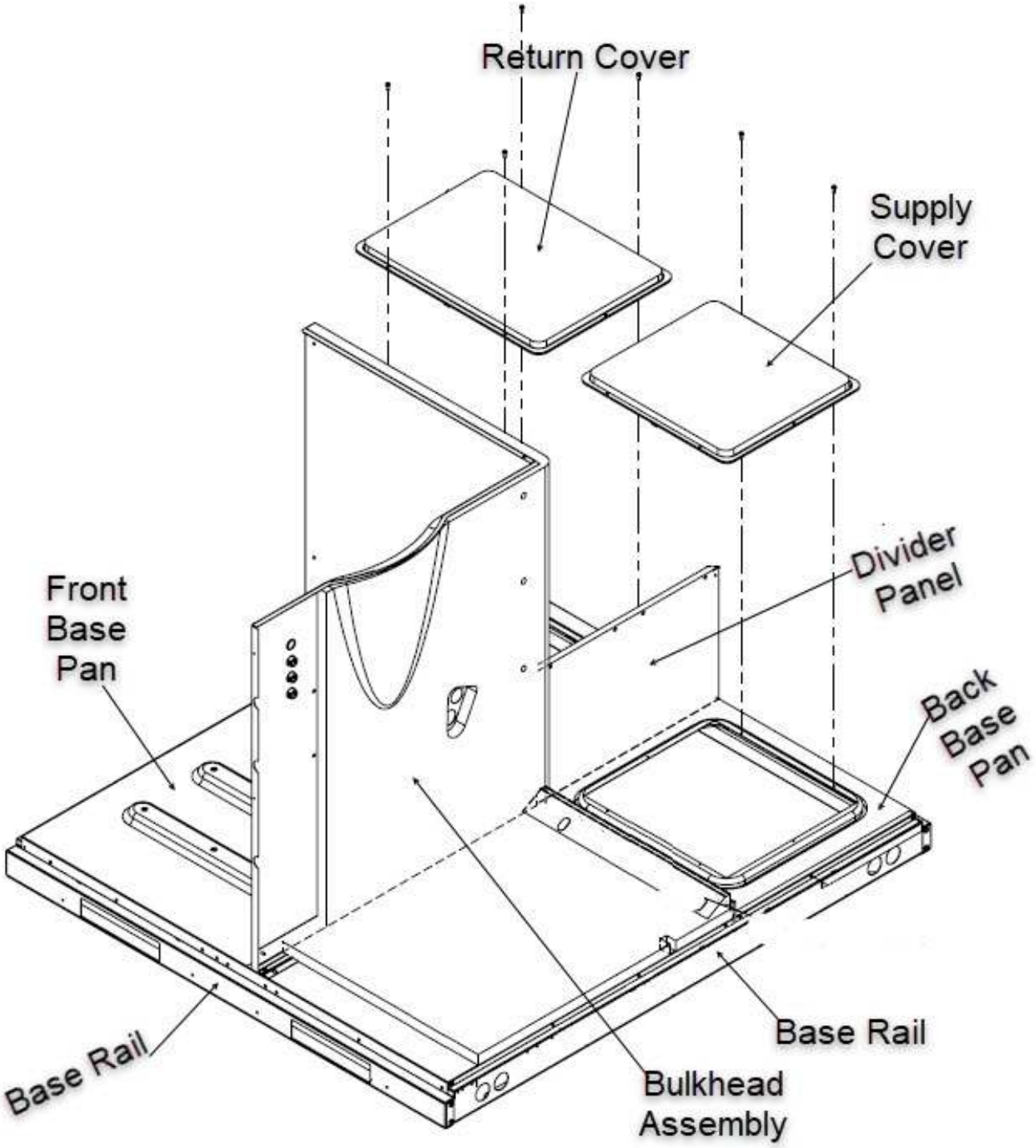

RHPAYB parts breakdown: ADS-105128-18A 4 Internal View

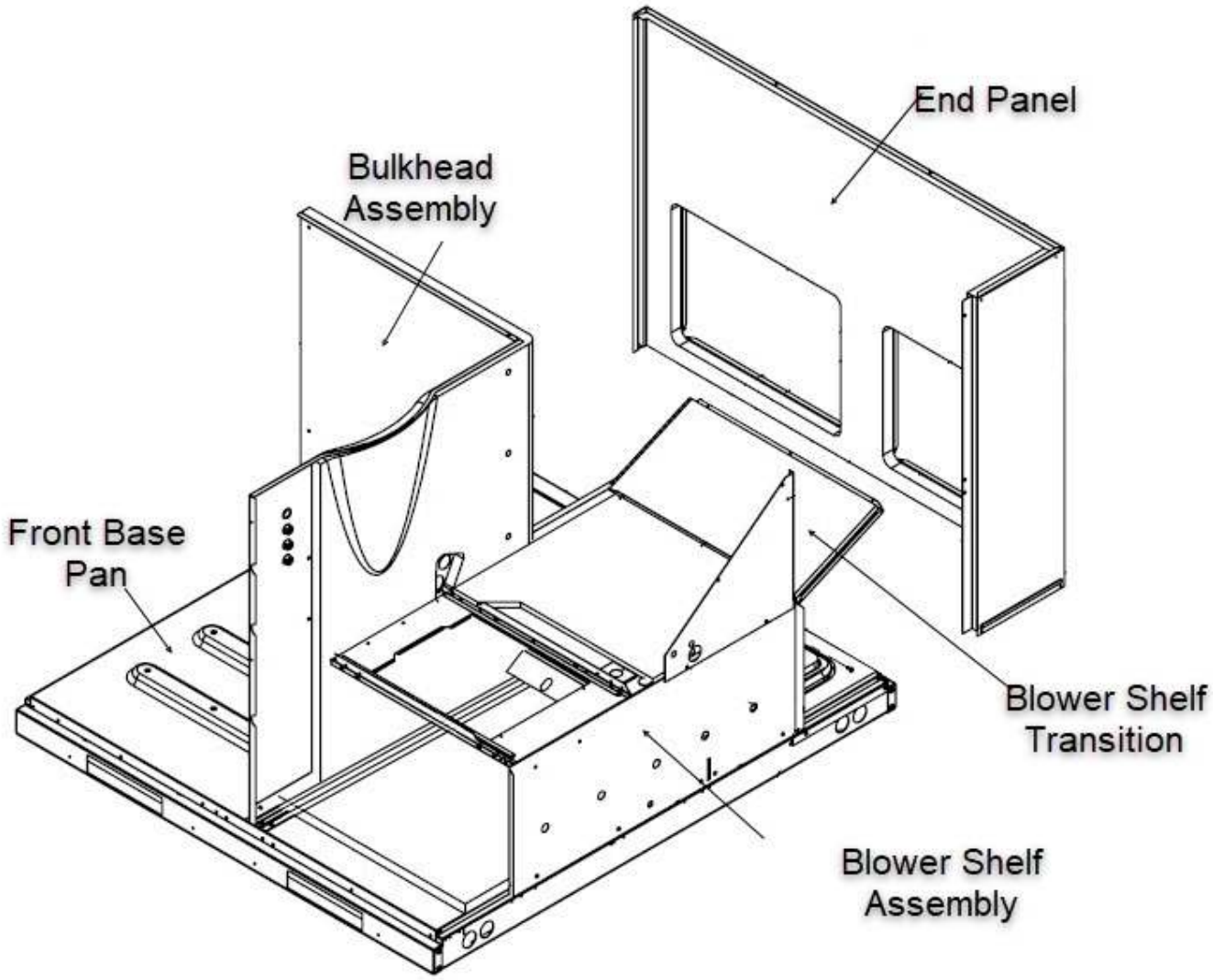

RHPAYB parts breakdown: ADS-105128-18A 5 Internal View AC

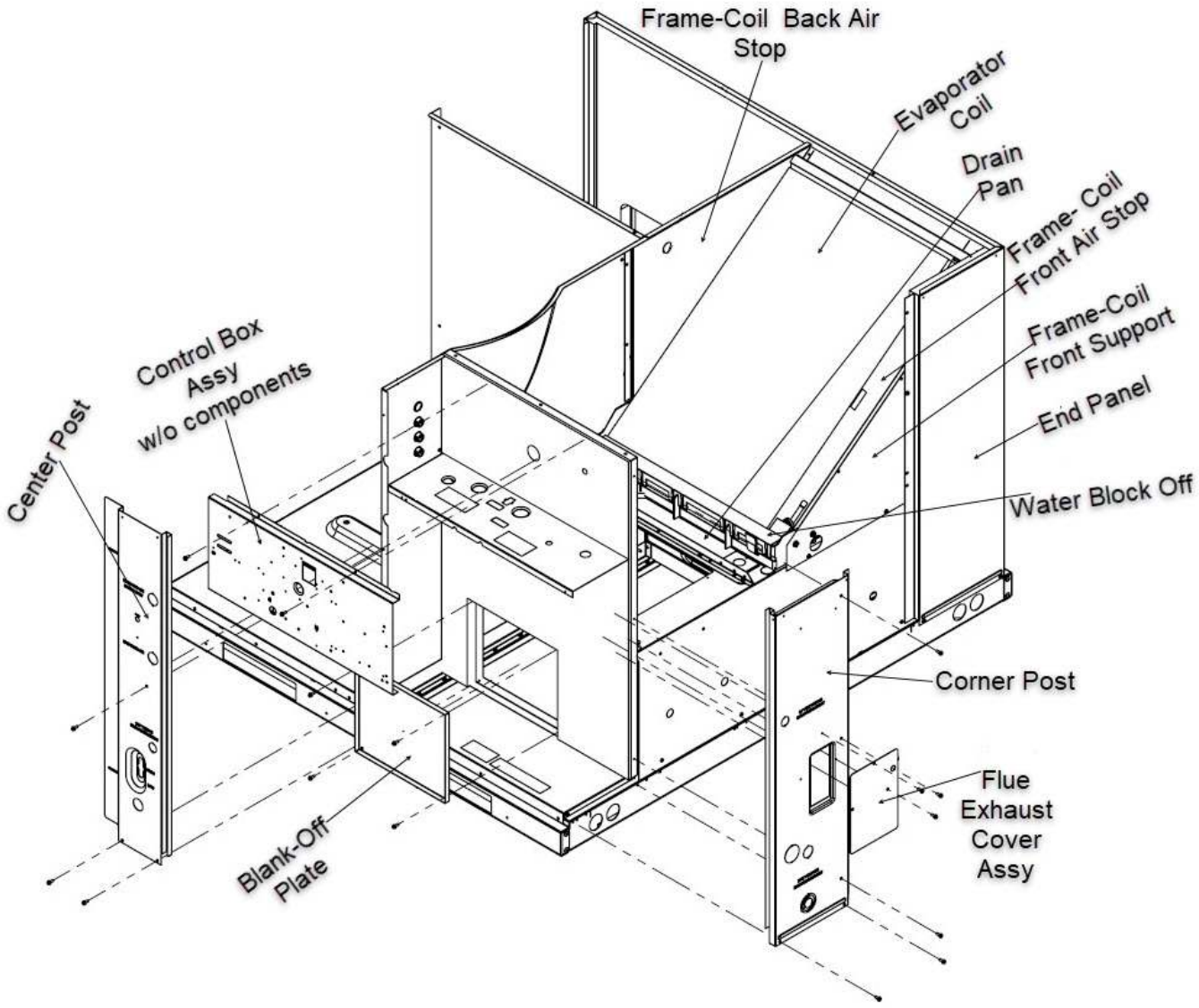

RHPAYB parts breakdown: ADS-105128-18A 6 Bulkhead Wiring Bushings

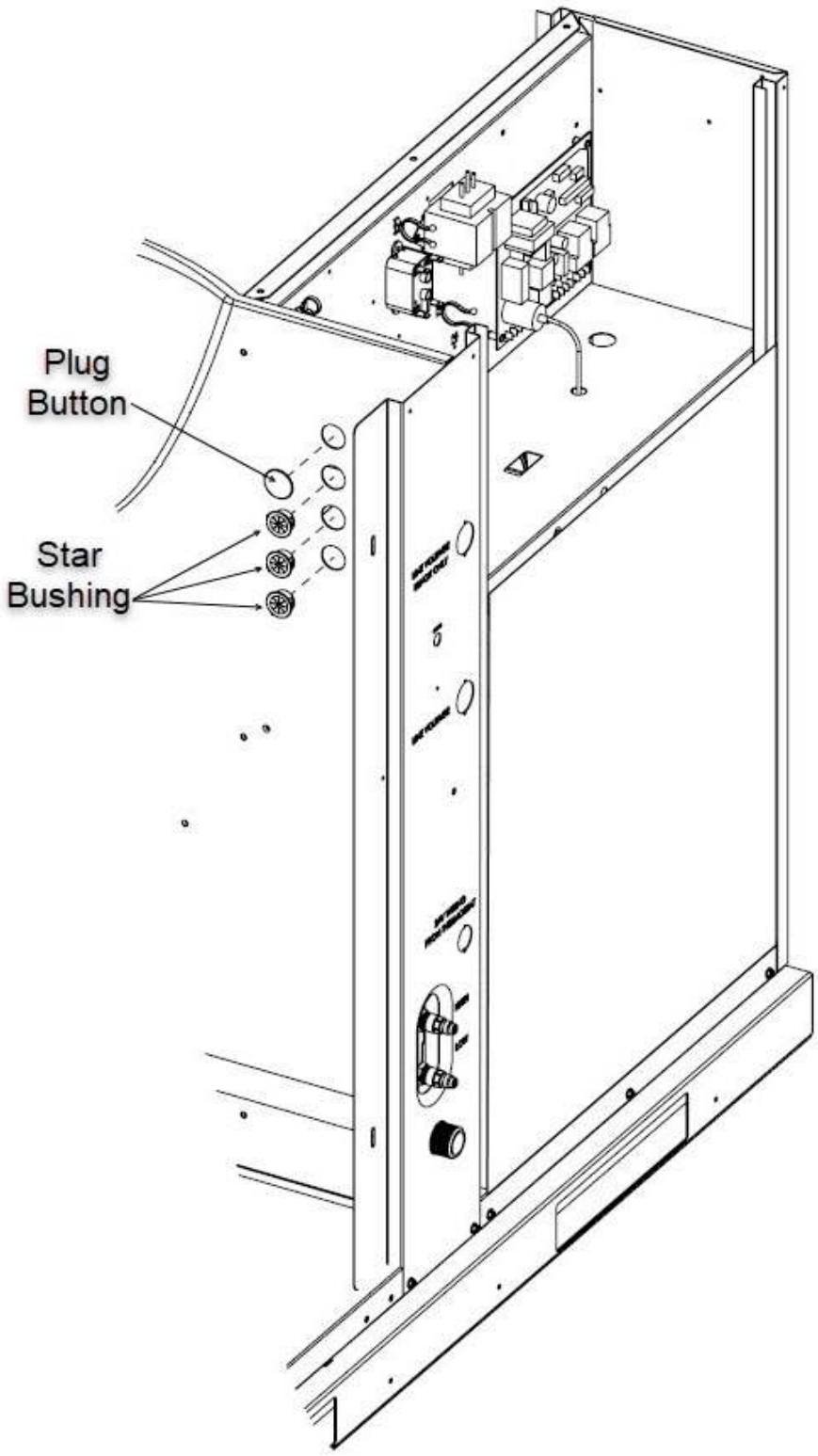

RHPAYB parts breakdown: ADS-105128-18A 7 Control Panel AC

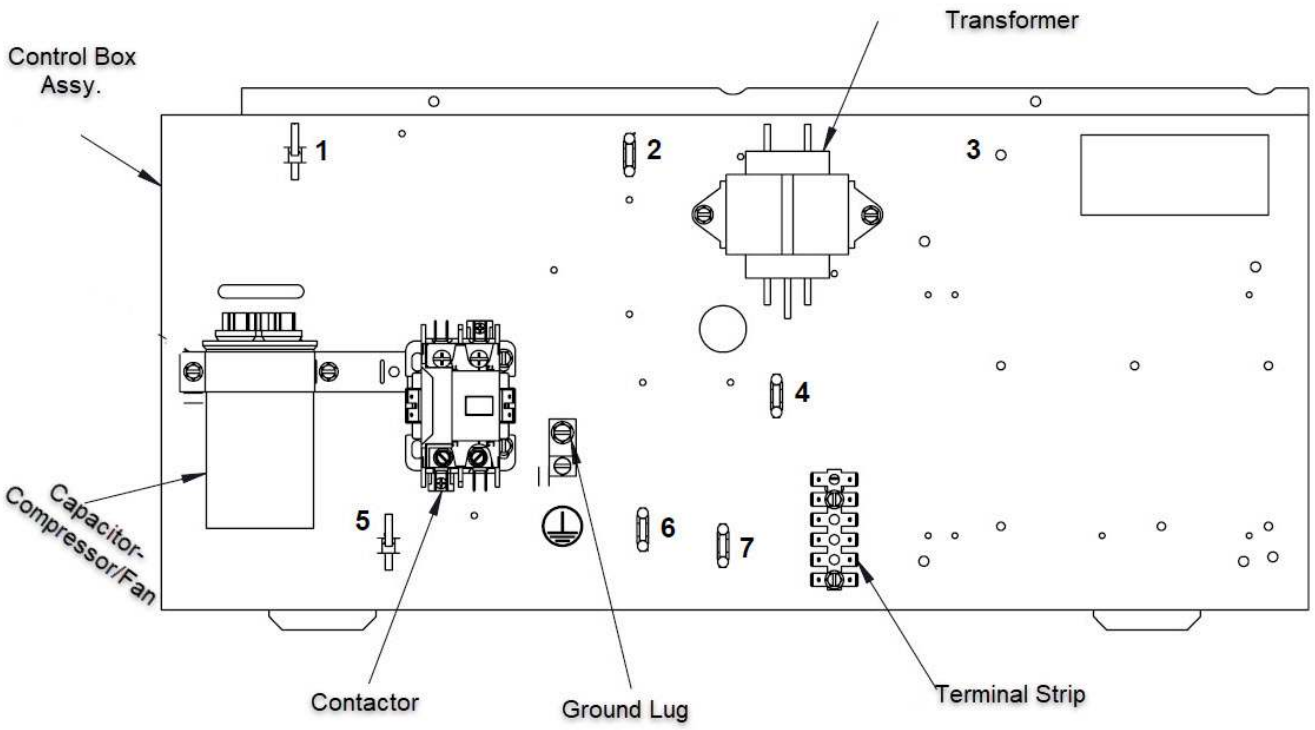

RHPAYB parts breakdown: ADS-105128-18A 8 Outdoor Fan

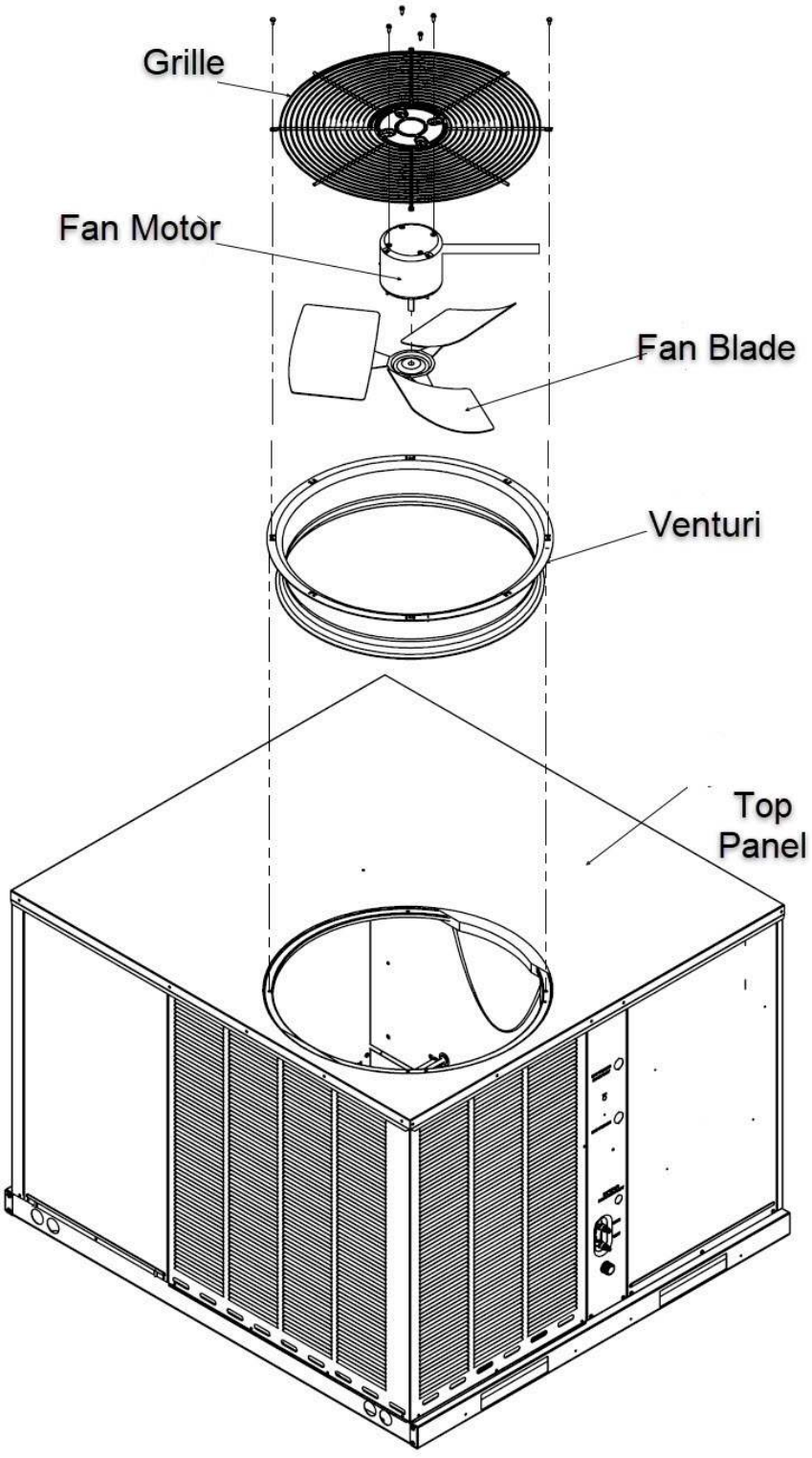

RHPAYB parts breakdown: ADS-105128-18A 9 Blower Assembly

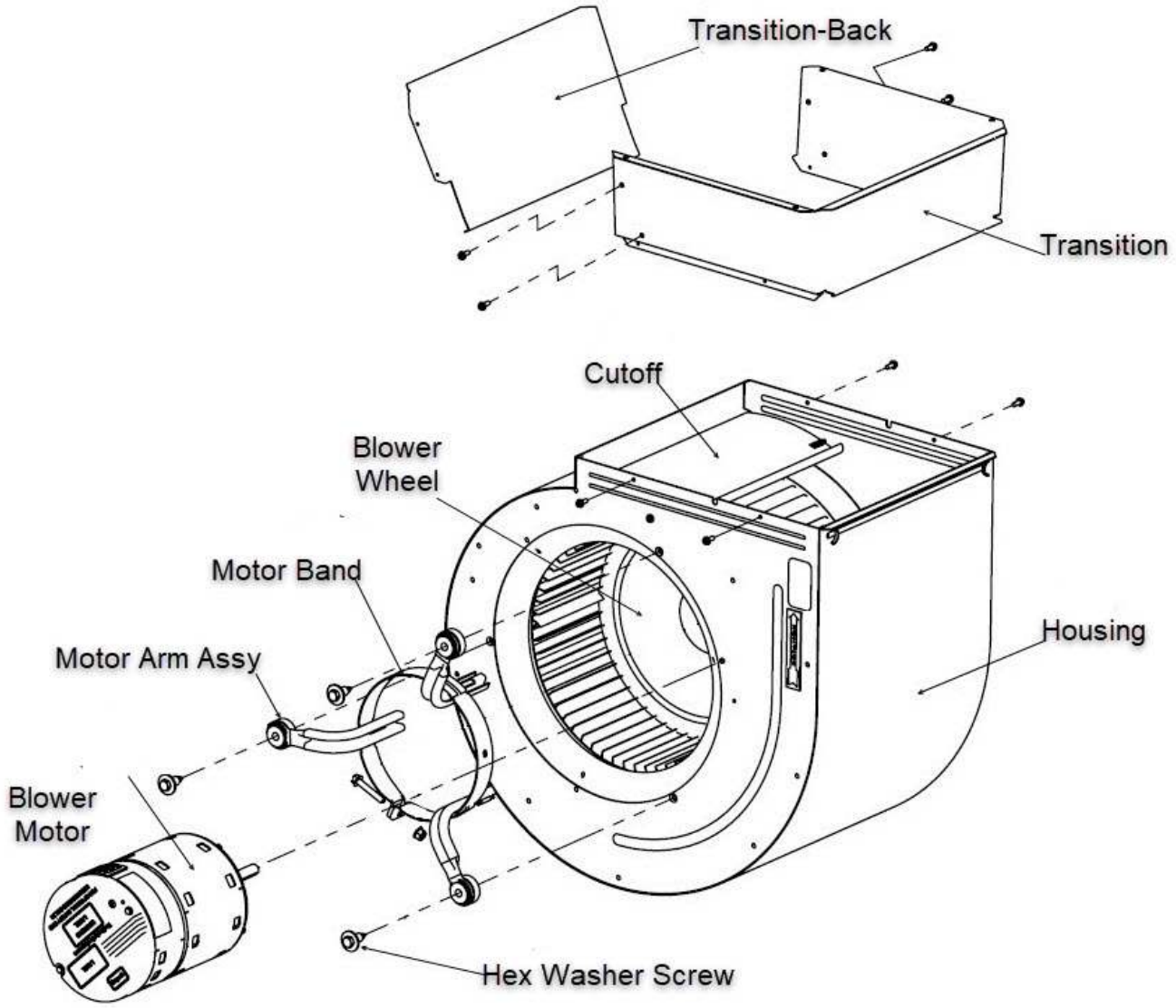

RHPAYB parts breakdown: ADS-105134-18A 10 Outdoor Coil 2-3 Ton

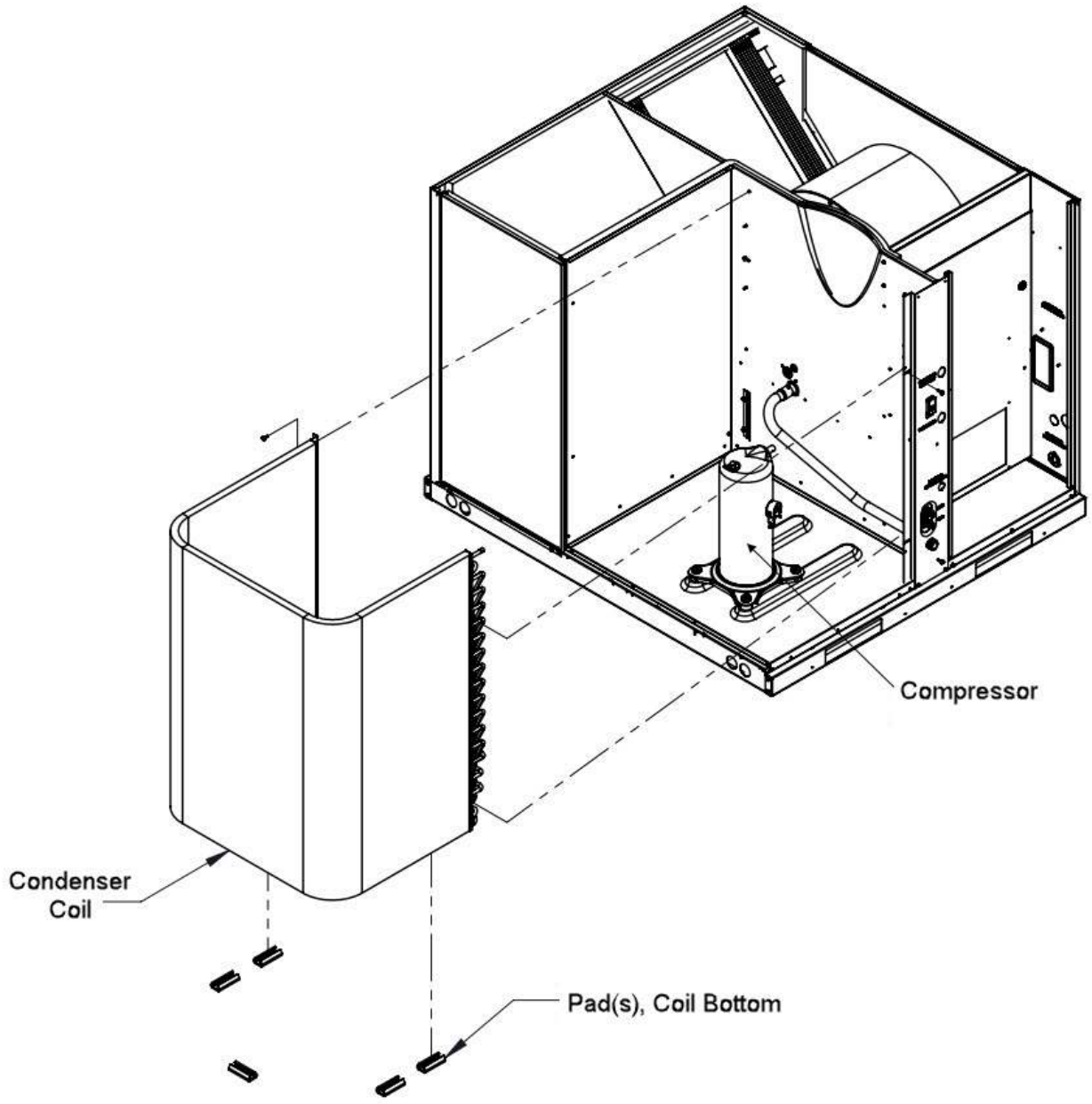

RHPAYB parts breakdown: ADS-105134-18A 11 Coil Frames 2C Drainpan

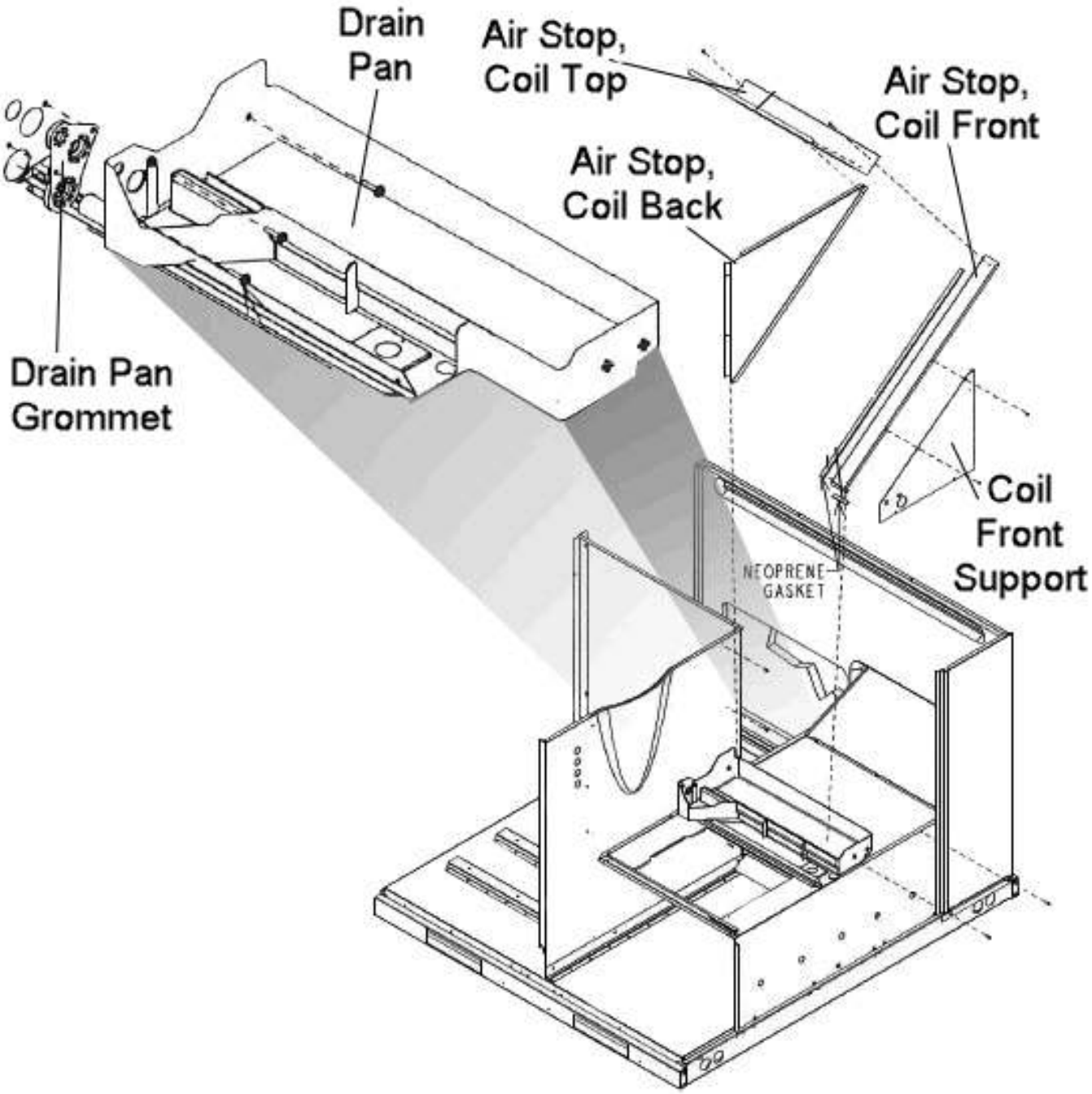

RHPAYB parts breakdown: ADS-105134-18A 12 Compressor View 024

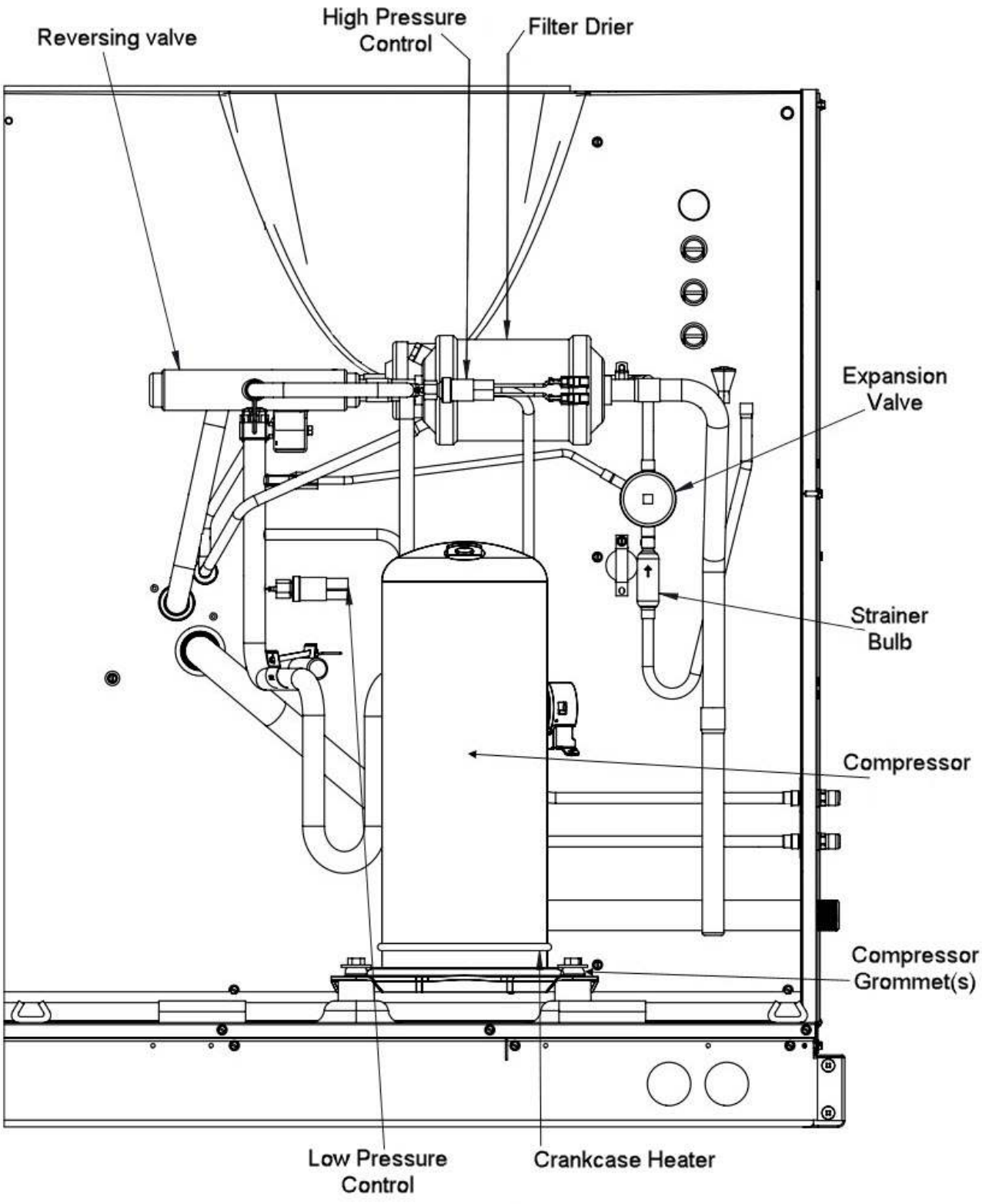

RHPAYB parts breakdown: ADS-105134-18A 13 Compressor View 030

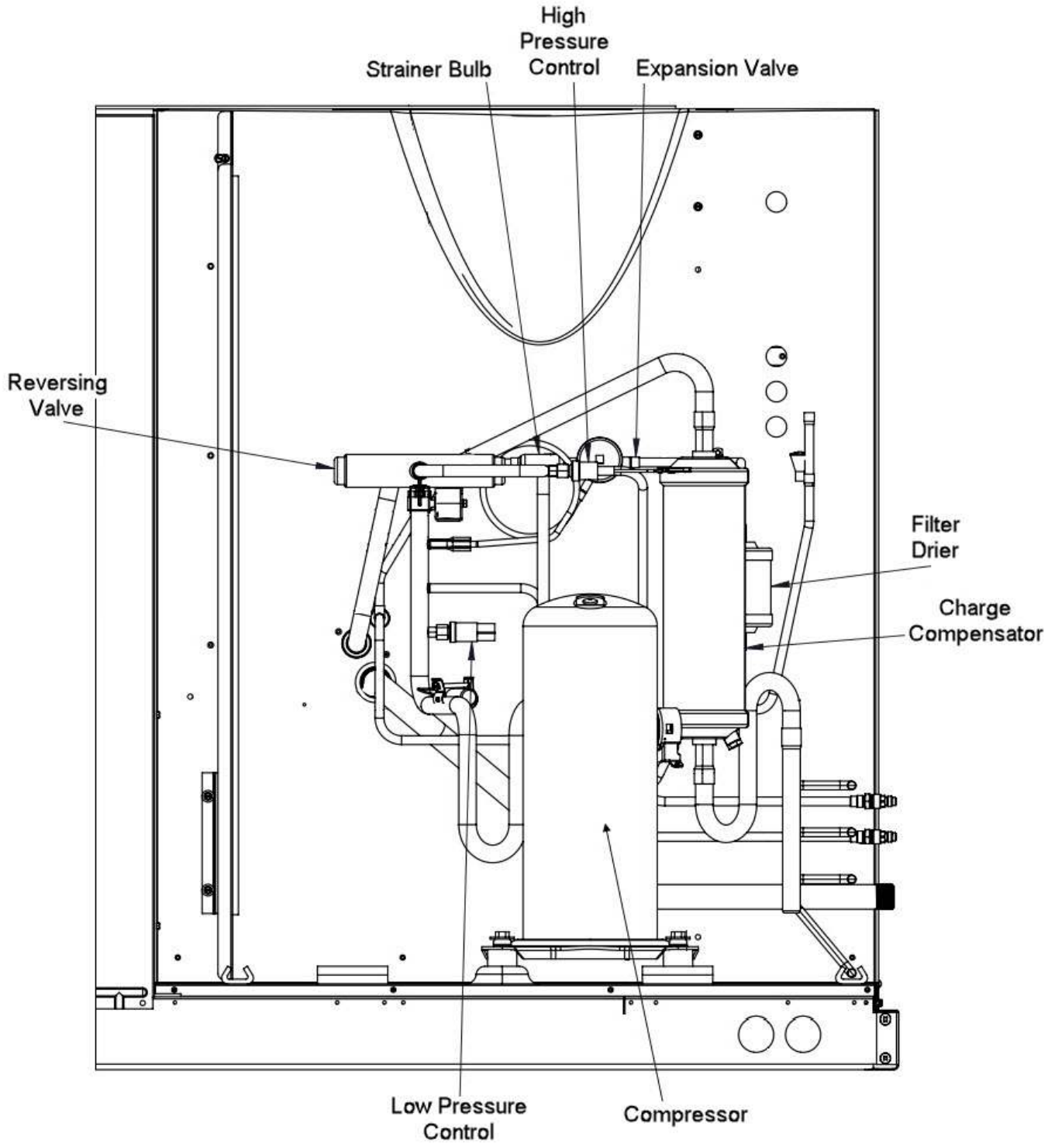

RHPAYB parts breakdown: ADS-105134-18A 14 Compressor View 036

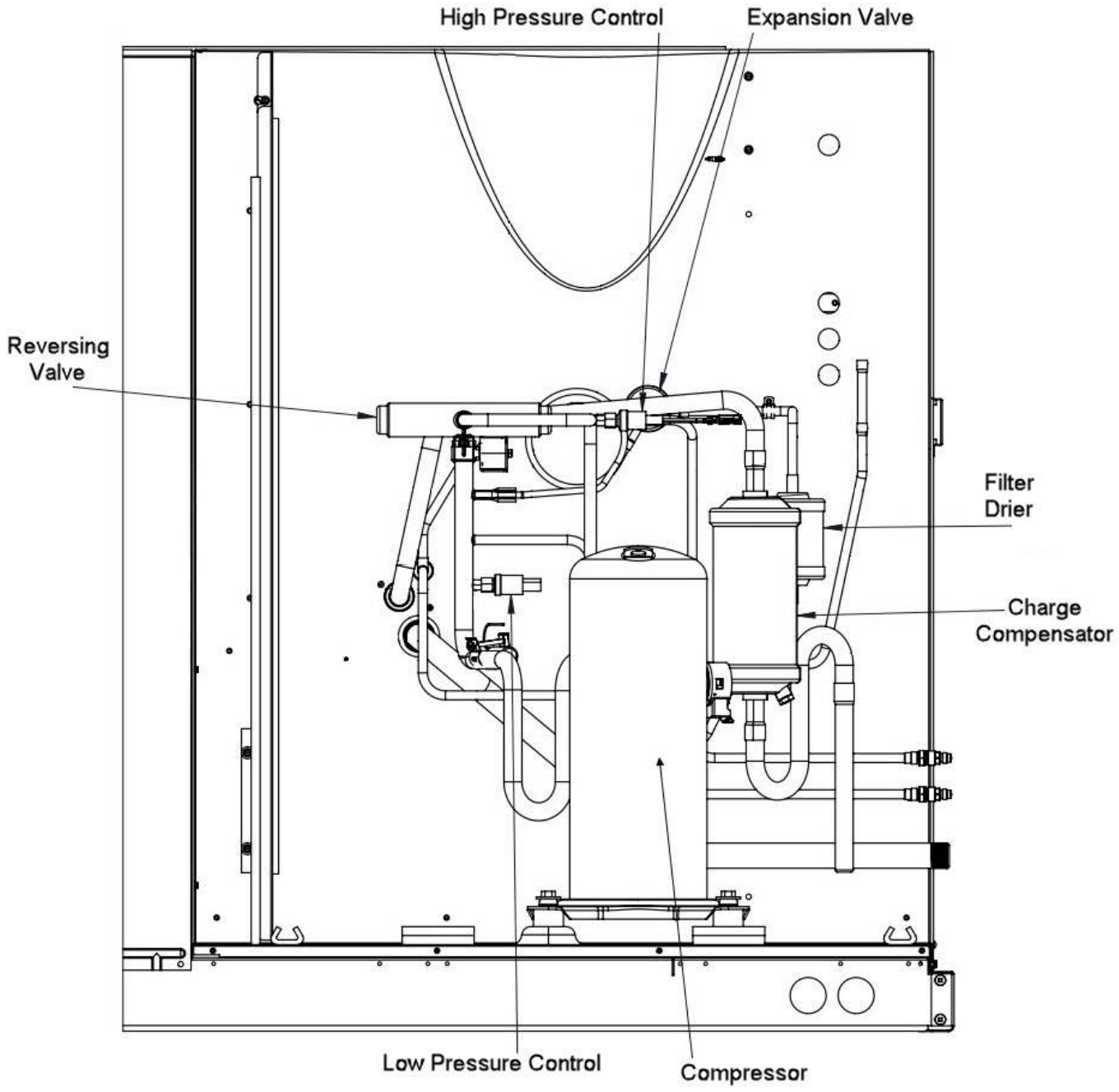

RHPAYB parts breakdown: ADS-105134-18A 2 Exterior Cabinet 282 29

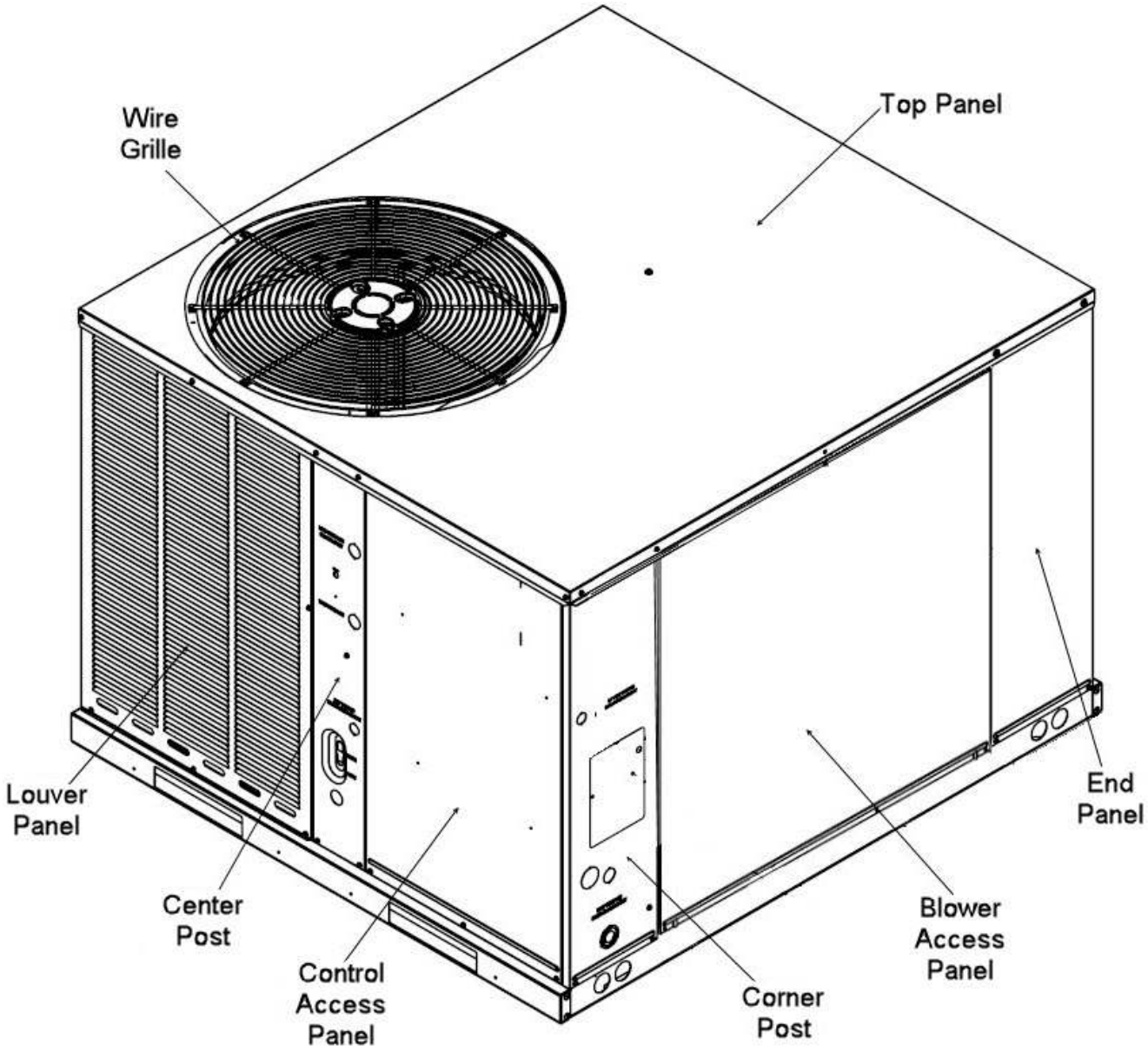

RHPAYB parts breakdown: ADS-105134-18A 3 Internal View 281 29

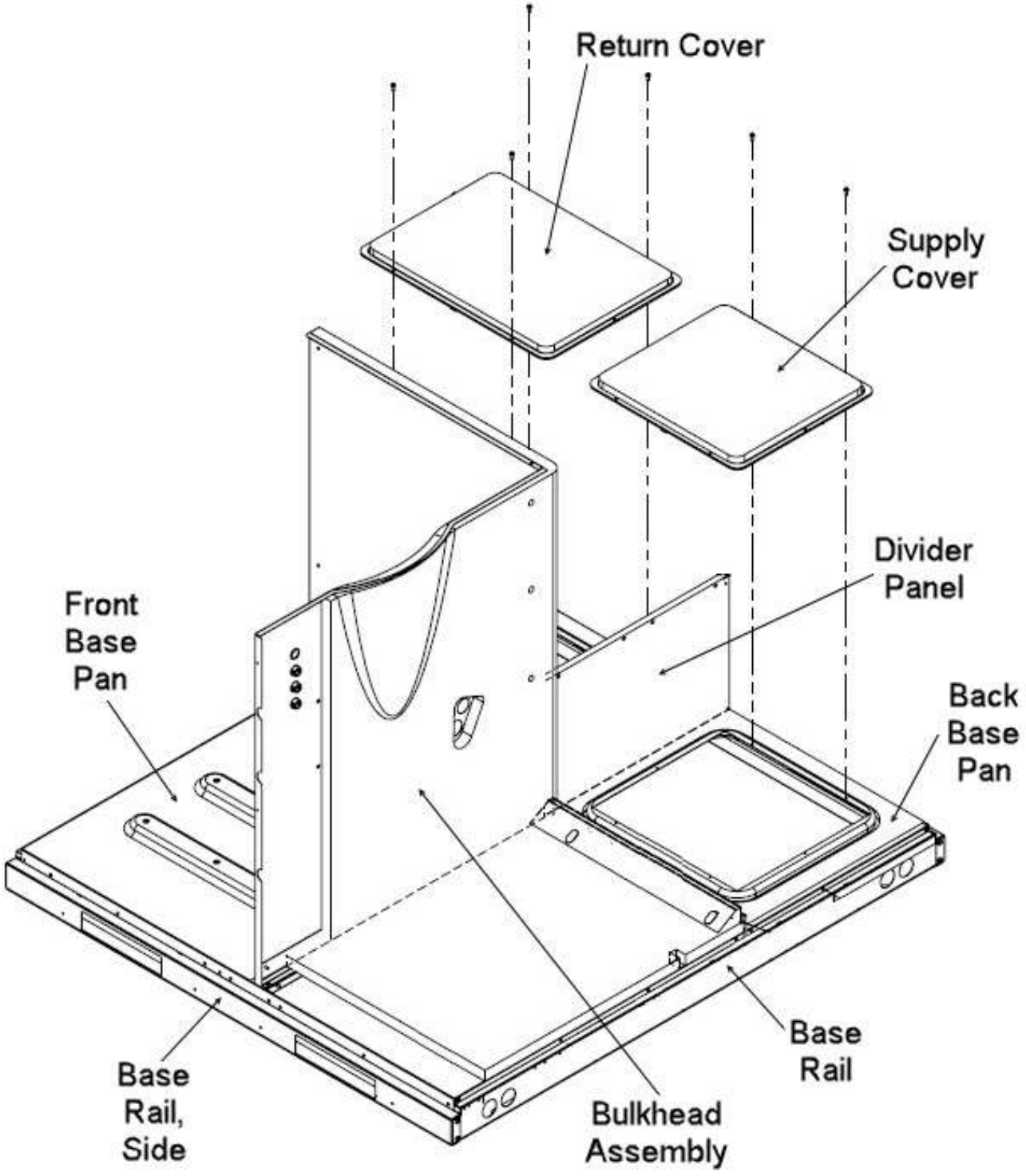

RHPAYB parts breakdown: ADS-105134-18A 5 Internal View AC 283 29

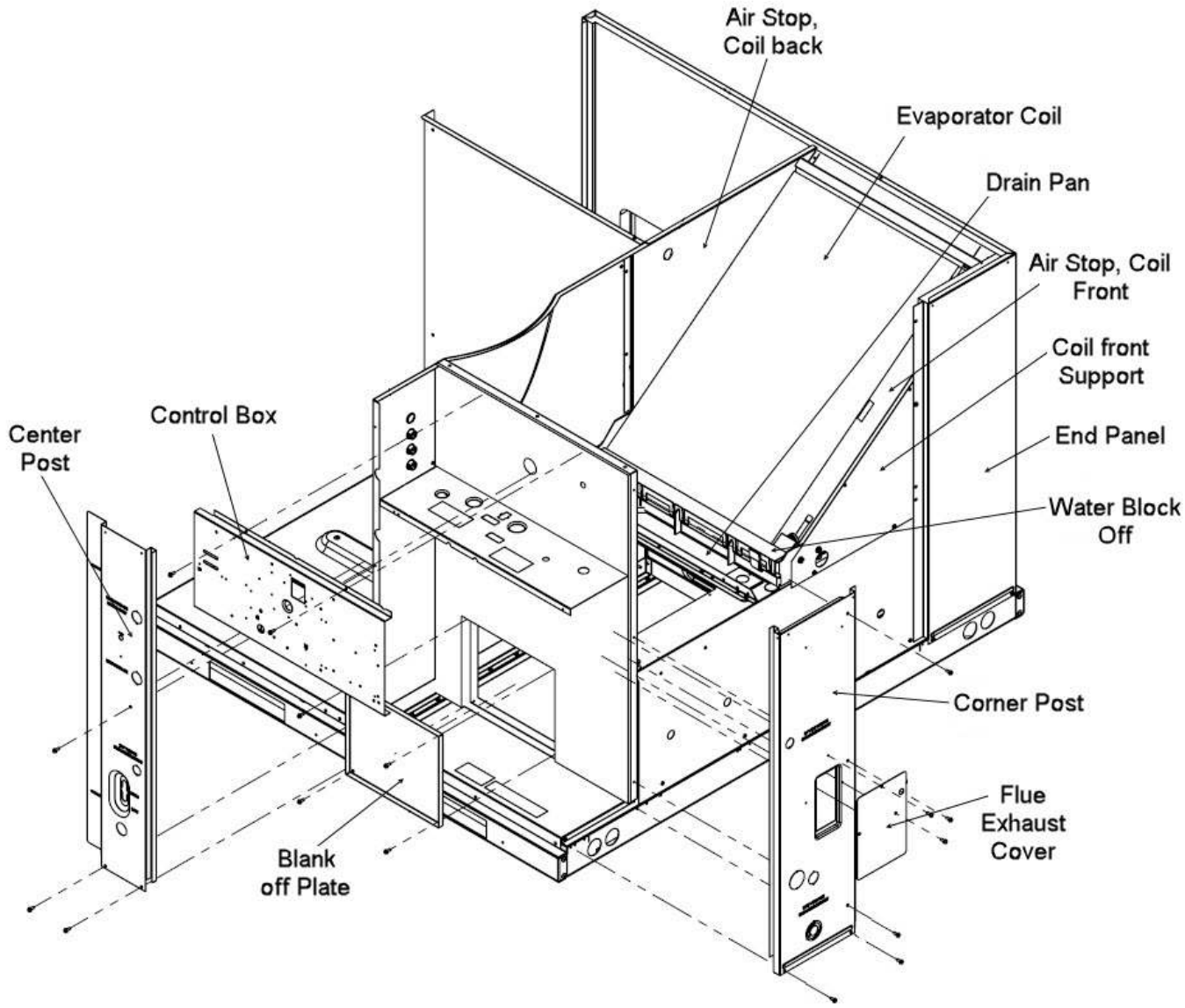

RHPAYB parts breakdown: ADS-105134-18A 7 Control Panel HP

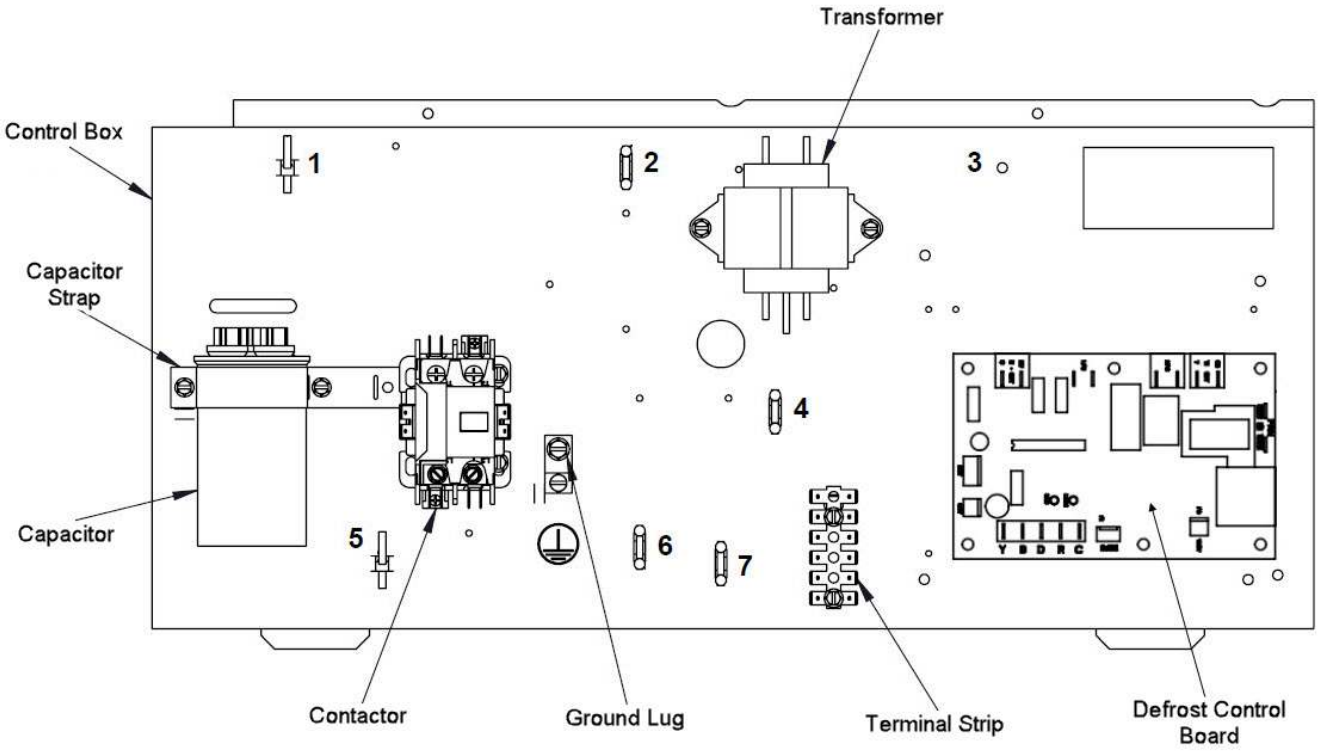

RHPAYB parts breakdown: ADS-105134-18A 9 Blower Assembly

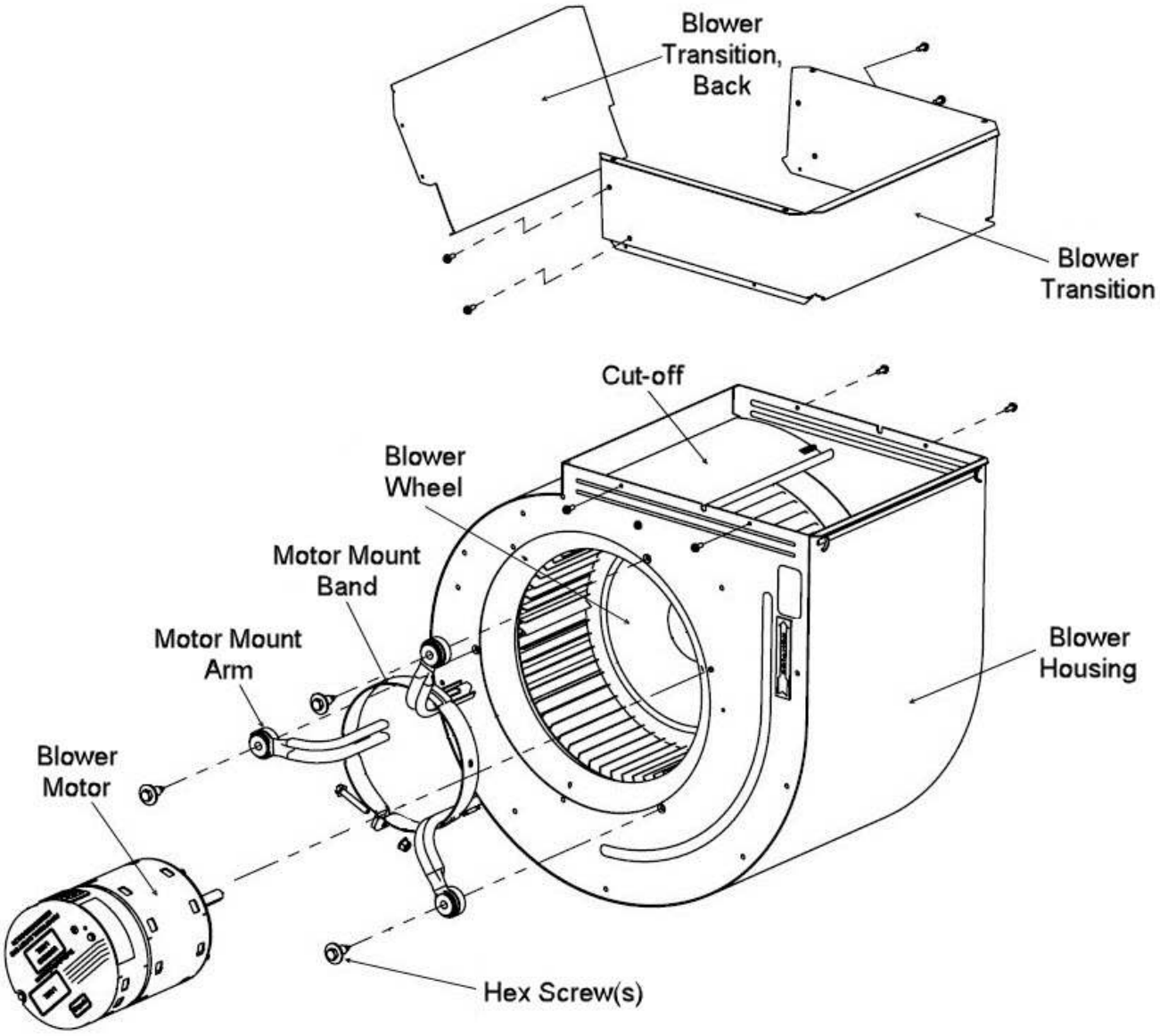

Compressor

Part No.	Description	Qty	Replaced By	Fits Models
55-107225-248	Compressor	1		RHPAYB024AJT000NA
55-107225-250	Compressor	1		RHPAYB030AJT000NA
63-20072-03	Compressor Mounting Screw (1-1/2 in. long)	4		All models
45-107231-02K	Compressor Plug Assembly Kit - LG	1		All models
56-18518-16	Mounting Grommet - Compressor	4		All models

Motors & fans

Part No.	Description	Qty	Replaced By	Fits Models
AS-108843-01	Blower Assembly	1		RHPAYB030AJT000NA
AS-108843-03	Blower Assembly	1		RHPAYB024AJT000NA
70-100840-02	Blower Assembly-Housing and Wheel only	1		RHPAYB030AJT000NA
70-18625-01K	Blower Wheel Kit	1		RHPAYB024AJT000NA
51-102500-10	Condenser Motor - 1/3 hp 208-230/1/60 (825 rpm/1 speed)	1		RHPAYB024AJT000NA
70-101323-19K	Fan Blade Kit	1		RHPAYB024AJT000NA
70-101323-60	Fan Blade, 22 in. 3-Blade	1		RHPAYB030AJT000NA
51-110424-03	Motor - Broad Ocean PSC - 1/3 hp, 825 rpm, 60Hz, 1PH, 230V	1		RHPAYB030AJT000NA
51-108728-139	Motor - Ensite Air (230V - 1/2 hp)	1		RHPAYB030AJT000NA
51-106545-00	Motor - SelecTech Gen 3 (230V - 1/2 hp) - BLANK	1		RHPAYB030AJT000NA
51-106544-23	Motor - SelecTech Gen 3 (230V - 1/3 hp)	1		RHPAYB024AJT000NA
51-106544-00	Motor - SelecTech Gen 3 (230V - 1/3 hp) - BLANK	1		RHPAYB024AJT000NA
70-19929-02	Motor Mount Arm w/Grommet	3		RHPAYB024AJT000NA
70-19929-09	Motor Mount Arm w/Grommet	3		RHPAYB030AJT000NA
70-19927-01	Motor Mount Band	1		RHPAYB024AJT000NA
70-19927-03	Motor Mount Band	1		RHPAYB030AJT000NA

Electrical

Part No.	Description	Qty	Replaced By	Fits Models
43-101665-06	Capacitor - 35/5/440 Dual Round	1		RHPAYB024AJT000NA
43-25133-23	Capacitor - 40/10/440 Dual Round	1		RHPAYB030AJT000NA
42-109499-06K	Contactor 32A XMC0-321 1P 1PH A2L	1		All models
47-102684-204	Defrost Control Board Kit	1		All models
45-19000-01	Ground Lug	1		All models
45-104222-04	Housing Assembly - Cap	1		All models
45-105282-06	Power Supply Harness - Control Panel To Constant Torque Motor	1		All models
47-109642-01	Sensor A2L (Sensirion)	1		All models
PD476604	Sensor Kit	1		All models
45-42548-02	Terminal Block	1		All models
45-23591-01	Terminal Strip	1		All models
46-100836-05	Transformer	1		All models
61-26149-06	Wiring Harness - Reversing Valve	1		All models
45-110324-01	Wiring Harness Assembly - RDS A-CAB	1		All models
45-110324-06	Wiring Harness Assembly - RDS Legacy AC HP	1		All models

Valves & switches

Part No.	Description	Qty	Replaced By	Fits Models
47-102290-01K	High Pressure Limit Kit - Auto Reset	1		All models
47-102240-02K	Low Pressure Limit Kit - Auto Reset	1		All models
61-102498-09K	Reversing Valve Kit	1		All models

Part No.	Description	Qty	Replaced By	Fits Models
61-109438-35	Thermostatic Expansion Valve (TXV) - Valve Only-Indoor (Cooling)	1		RHPAYB024AJT000NA
61-109438-36	Thermostatic Expansion Valve (TXV) Sporlan - Valve Only-Outdoor	1		RHPAYB024AJT000NA
61-18551-01	Valve Core	3		All models

Coil & refrigeration

Part No.	Description	Qty	Replaced By	Fits Models
61-106118-01	CoreMax Valve Core	2		All models
83-104825-03	Liquid Line Filter Drier (Bi-Directional)	1		All models
65-104387-06K	Micro Channel Evaporator Coil	1		RHPAYB030AJT000NA
AS-104387-06K	Micro Channel Evaporator Coil - Gasket Assembly	1		RHPAYB030AJT000NA
AS-108764-02	Micro Channel Heat Exchanger - Sanhua	1		RHPAYB030AJT000NA
61-109438-25	Thermostatic Expansion Valve (TXV) - HX Series	1		RHPAYB030AJT000NA
61-109438-26	Thermostatic Expansion Valve (TXV) - HX Series	1		RHPAYB030AJT000NA
64-21106-02	TXV Bulb Strap Mounting Kit	2		All models

Cabinet & hardware

Part No.	Description	Qty	Replaced By	Fits Models
AE-58566-01HT	Access Panel - Blower	1		RHPAYB024AJT000NA
AE-58566-02HT	Access Panel - Blower	1		RHPAYB030AJT000NA
AE-58571-01HT	Access Panel - Filter	1		RHPAYB024AJT000NA
AE-58571-02HT	Access Panel - Filter	1		RHPAYB030AJT000NA
83-100635-01	Access Valve Cap	3		All models
83-100635-05	Access Valve Cap	3		All models
82-58611-02	Auxiliary Drain Pipe	1		All models
AS-108823-01	Back Base Pan Insulation Assembly	1		All models
AE-58564-02	Base Pan - Back	1		All models
AE-58563-09	Base Pan - Front	1		All models
AE-58562-06	Base Rail	2		All models
AE-58562-08	Base Rail	2		All models
AS-108821-01	Base Rail Assembly	1		All models
AS-108820-01HT	Blower Access Assembly (Short)	1		RHPAYB024AJT000NA
AS-108820-02HT	Blower Access Assembly (Tall)	1		RHPAYB030AJT000NA
AE-64401-06	Blower Cut-Off	1		RHPAYB024AJT000NA
AS-58619-02	Blower Housing	1		RHPAYB024AJT000NA
AS-108825-02	Blower Shelf Assembly	1		All models
AS-108826-01	Blower Shelf Transition Assembly	1		All models
63-19919-01	Bolt, 1/4-20 x 1-1/2 in.	1		All models
68-104248-07	Bottom Coil Pad	3		All models
AE-102859-21	Bracket - Air Sensor	1		All models
45-17055-07	Bushing - Strain Relief	1	OBSOLETE	All models
45-17055-11	Bushing - Strain Relief	1/2		All models
45-17055-15	Bushing - Strain Relief	1		All models
45-18232-02	Button Plug - Metal (Snap-In)	1		All models
64-101148-06	Cable Tie - Double Loop, 7.6"	1		All models
AE-50892-59	Capacitor Strap	1		All models
AS-108818-01HT	Center Post Assembly (Short)	1		RHPAYB024AJT000NA
AS-108818-02HT	Center Post Assembly (Tall)	1		RHPAYB030AJT000NA
10-58570-10HT	Condenser Louver Panel	1		RHPAYB024AJT000NA
AS-108845-03HT	Control Access Assembly (Short)	1		RHPAYB024AJT000NA
AS-108845-04HT	Control Access Assembly (Tall)	1		RHPAYB030AJT000NA

Part No.	Description	Qty	Replaced By	Fits Models
AE-107932-01	Control Box Back Panel	1		All models
AS-108830-04	Control Box Shelf Assembly (HP)	1		All models
AE-108470-01HT	Corner Post (Short)	1		RHPAYB024AJT000NA
AE-108470-02HT	Corner Post (Tall)	1		RHPAYB030AJT000NA
AS-108816-01HT	Corner Post Assembly (Short)	1		RHPAYB024AJT000NA
AS-108816-02HT	Corner Post Assembly (Tall)	1		RHPAYB030AJT000NA
AS-108824-01	Divider Panel Insulation Assembly	1		All models
68-108460-01	Drain Pan	1		All models
AS-108827-01	Drain Pan Assembly	1		All models
56-23601-01	Drain Pan Fitting	1		All models
63-22159-01	Drill-Tip Sheet Metal Screw, 8-18 x 1/2 in.	1		All models
AE-58586-01HT	Duct Cover - Return Air	1		All models
AE-58587-01HT	Duct Cover - Supply Air	1		All models
AE-58565-01HT	End Panel	1		RHPAYB024AJT000NA
AE-58565-02HT	End Panel	1		RHPAYB030AJT000NA
AS-108817-01HT	End Panel Assembly (Short)	1		RHPAYB024AJT000NA
AS-108817-02HT	End Panel Assembly (Tall)	1		RHPAYB030AJT000NA
AS-108814-01	Extension Panel Insulation Assembly	1		RHPAYB030AJT000NA
64-23207-02	EZ Twist Lock Support Fastener	1/6		All models
95-108200-01	Fan Grille	1		All models
AS-108829-01	Fan Grille/Venturi Assembly	1		All models
AS-108819-01HT	Filter Access Assembly (Short)	1		RHPAYB024AJT000NA
AS-108819-02HT	Filter Access Assembly (Tall)	1		RHPAYB030AJT000NA
AE-102132-01	Filter Drier Strap	1		All models
AS-108828-01	Filter Drier Strap Assembly	1		All models
AS-108849-01HT	Flue Exhaust Cover Assembly	1		All models
AS-108812-09	Frame - Coil Back Air Stop Short Assembly	1		RHPAYB024AJT000NA
AE-104570-01HT	Frame - Coil Front Air Stop	1		RHPAYB024AJT000NA
AE-104570-02HT	Frame - Coil Front Air Stop	1		RHPAYB030AJT000NA
AS-108812-01	Frame - Coil Front Air Stop Assembly (Short)	1		RHPAYB024AJT000NA
AS-108812-04	Frame - Coil Front Air Stop Assembly (Tall)	1		RHPAYB030AJT000NA
AE-104572-01	Frame - Coil Front Support	1		RHPAYB024AJT000NA
AE-104572-02	Frame - Coil Front Support	1		RHPAYB030AJT000NA
AS-108812-02	Frame - Coil Front Support Assembly (Short)	1		RHPAYB024AJT000NA
AS-108812-05	Frame - Coil Front Support Assembly (Tall)	1		RHPAYB030AJT000NA
AE-104571-01	Frame - Coil Top Air Stop	1		RHPAYB024AJT000NA
AE-104571-02	Frame - Coil Top Air Stop	1		RHPAYB030AJT000NA
AS-108812-03	Frame - Coil Top Air Stop Assembly (Short)	1		RHPAYB024AJT000NA
AS-108812-06	Frame - Coil Top Air Stop Assembly (Tall)	1		RHPAYB030AJT000NA
AS-108822-01	Front Base Pan Insulation Assembly	1		All models
68-42246-01	Gasket - 1,250 ft. long x 1/8 in. thick x 1/2 in. wide	2/3/4/6/7/8/9		All models
68-42246-86	Gasket - 15 ft. long x 1/8 in. thick x 3/4 in. wide	6		All models
68-22079-06	Gasket - Neoprene (1/4 in. x 1/2 in.)	3/4		All models
68-22079-09	Gasket - Neoprene (1/8 in. x 1 in.)	2		All models
68-22079-84	Gasket - Neoprene (1/8 in. x 1/2 in.) - 100 ft. Roll	1/3/5/6/7		All models
68-22079-85	Gasket - Neoprene (1/8 in. x 3/4 in.) - 100 ft. Roll	3		RHPAYB030AJT000NA
68-20243-02	Gasket Stripping - 3/8 in. x 3/4 in. x 36 ft. roll	1/3/4/5		All models
68-20243-03	Gasket Stripping - 3/8 in. x 3/4 in. x 50 ft. roll	4		All models
65-108764-02	Heat Exchanger - Micro Channel Coil	1		RHPAYB030AJT000NA
65-108764-03	Heat Exchanger - Micro Channel Coil	1		RHPAYB024AJT000NA

Part No.	Description	Qty	Replaced By	Fits Models
AE-59433-01	Heat Exchanger Extension	1	OBSOLETE	RHPAYB030AJT000NA
AS-108847-01	Heater Blank off Panel Assembly (Only for No Heat Models)	1		All models
AS-108841-02	Heater Mounting Panel Insulation Assembly	1		All models
63-17189-03	Hex Nut, 1/4-20, w/External Tooth Lock Washer	1		All models
68-20185-01	Insulation	1/2		All models
68-23635-22	Insulation - Access Panel	1		RHPAYB024AJT000NA
68-23635-30	Insulation - Blower Access Panel	1		RHPAYB030AJT000NA
68-23635-08	Insulation - Blower Shelf	1		All models
68-23635-09	Insulation - Shelf Transition	1		All models
64-25340-02	Locking Wing Push Mount Tie	1		All models
AS-108815-01HT	Louver Panel Assembly (Short)	1		RHPAYB024AJT000NA
AS-108815-02HT	Louver Panel Assembly (Tall)	1		RHPAYB030AJT000NA
65-104387-04K	Micro Channel Evaporator Coil Kit	1		RHPAYB024AJT000NA
10-58570-09HT	Panel	1		RHPAYB030AJT000NA
AE-58570-09	Panel	1		RHPAYB030AJT000NA
AE-58568-02HT	Panel - Access	1		RHPAYB024AJT000NA
AE-58568-04HT	Panel - Access	1		RHPAYB030AJT000NA
68-42246-04	Poron Gasket 1/8" X 1/2" X 12 Ft Roll	12		All models
68-23603-01	PVC Trap	1		All models
AS-108836-01HT	Return Duct Cover Insulation Assembly	1		All models
63-20072-05	Screw	3		All models
AE-109647-01	Sensor Mounting Bracket	1		All models
63-42112-09	Sheet Metal Screw w/ Gasket, 8-18 x 1 in.	1/2/3/5/10/12		All models
63-42112-07	Sheet Metal Screw w/ Gasket, 8-18 x 5/8 in.	11/13		All models
63-42109-06	Sheet Metal Screw, 10-16 x 1-1/4 in.	4		All models
63-42109-03	Sheet Metal Screw, 10-16 x 5/8 in.	2		All models
63-24368-01	Sheet Metal Screw, 8-18 x 1/4 in.	2		All models
63-22153-02	Sheet Metal Screw, 8-18 x 7/8 in.	1/2		All models
45-18515-01	Snap-In Bushing - Conductor Protection	1		All models
45-42519-01	Snap-In Bushing - Conductor Protection	1		All models
63-22429-01	Stainless Steel Sheet Metal Screw, 8-18 x 1/2 in.	1/2/3/4/5/6/7/9/10/15		All models
68-21799-03	Stripping - 1-3/8 in. x 1 ft.	4		All models
68-23618-81	Stripping - 40 ft. Roll	1/2/3		All models
AS-108837-01HT	Supply Duct Cover Insulation Assembly	1		All models
63-100404-06	Thread-Forming Screw (black), 10-32 x 7/16 in.	4		All models
63-22487-01	Thread-Forming Screw, 10-32 x 1/2 in.	1		All models
63-100404-03	Thread-Forming Screw, 12-24 x 3/4 in.	4		All models
AS-108835-02HT	Top Panel/Insulation Assembly	1		RHPAYB030AJT000NA
AS-108835-03HT	Top Panel/Insulation Assembly	1		RHPAYB024AJT000NA
AE-102207-05	Transition	1		RHPAYB030AJT000NA
AE-102207-06	Transition	1		RHPAYB030AJT000NA
68-104464-18	Venturi	1		All models
68-108461-01	Water Block-Off	1		All models
64-17606-04	Wire & Cable Tie - Nylon Black - 11-1/2 in.	3		All models
64-17606-06	Wire & Cable Tie - Nylon Black - 7-1/2 in.	1		All models
64-17606-01	Wire & Cable Tie - Nylon Black - 8 in.	1		All models