Rheem RHPBYB Package Unit Replacement Parts List

Parts list RP-RHM-RHPBYB | Updated Nov 2026 | 163 parts | 10 model numbers

Genuine Rheem OEM part numbers for the models listed below, compiled from Rheem Manufacturing's service parts catalog. Quantities are per unit. Where Rheem has replaced a part number, the current number is shown under Replaced By. Always confirm the full model and serial number of the unit before ordering.

Models covered

RHPBYB024AJT000NA, RHPBYB024AJT000NAAUA, RHPBYB030AJT000NA, RHPBYB030AJT000NAAUA, RHPBYB036AJT000NA, RHPBYB036AJT000NAAUA, RHPBYB042AJT000NA, RHPBYB042AJT000NAAUA, RHPBYB048AJT000NA, RHPBYB048AJT000NAAUA

RHPBYB parts breakdown: ADS-105134-18B 10 Compressor Area 2 2C2.5 2C3.5 Ton Parts Lists

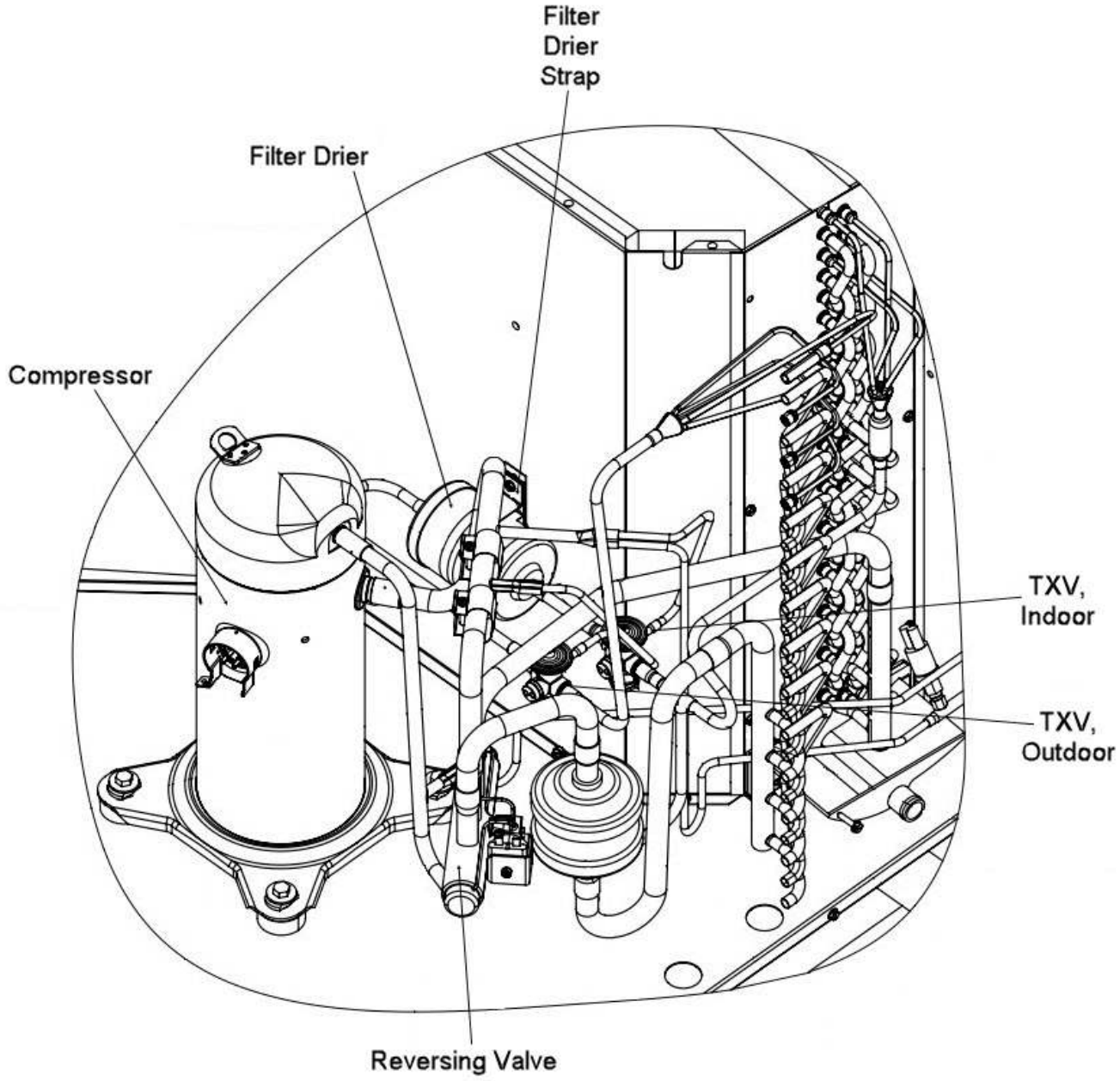

RHPBYB parts breakdown: ADS-105134-18B 11 Compressor Area 3 2C4 2C5 Ton Parts Lists

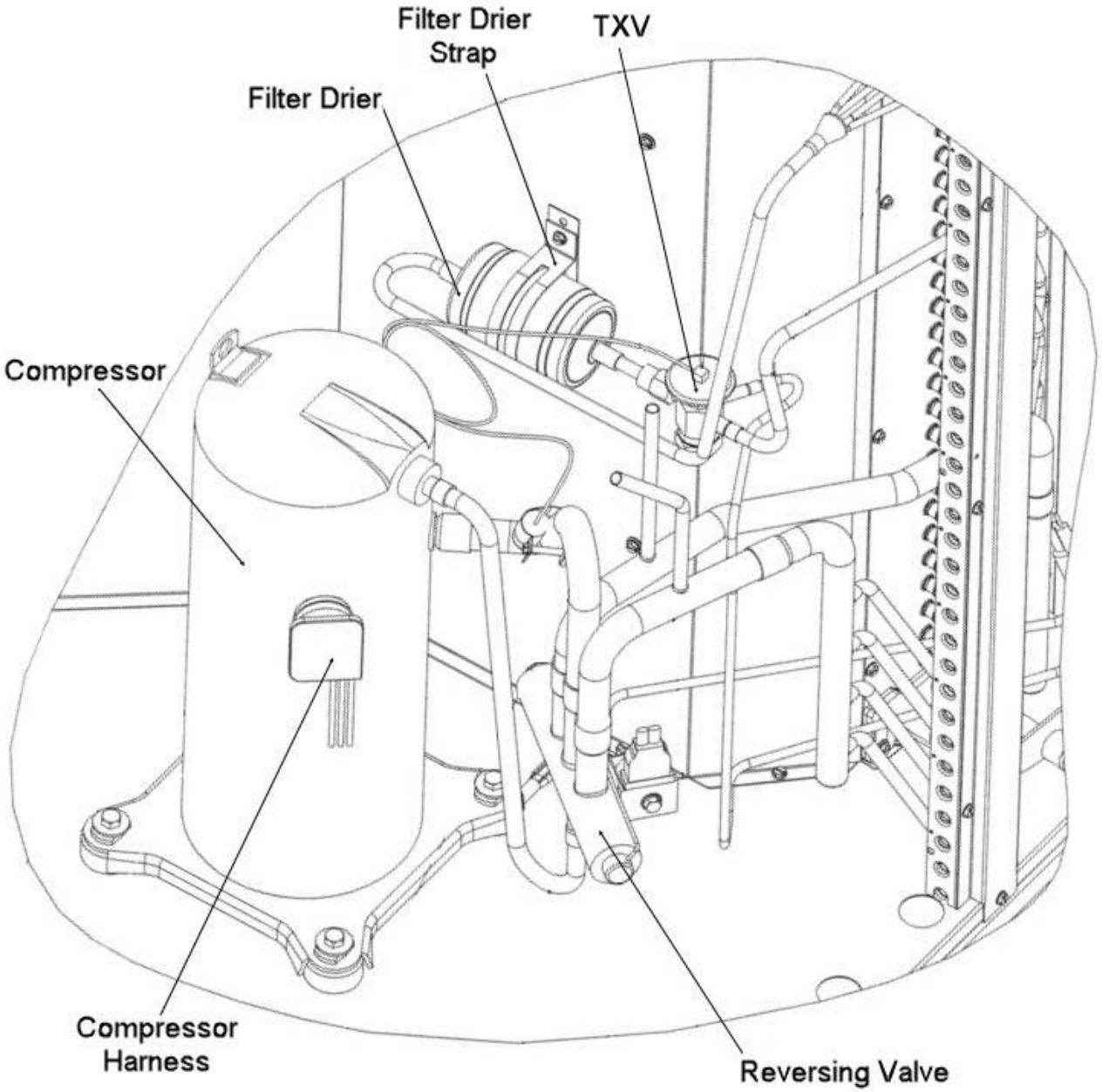

RHPBYB parts breakdown: ADS-105134-18B 1 Exterior Cabinet

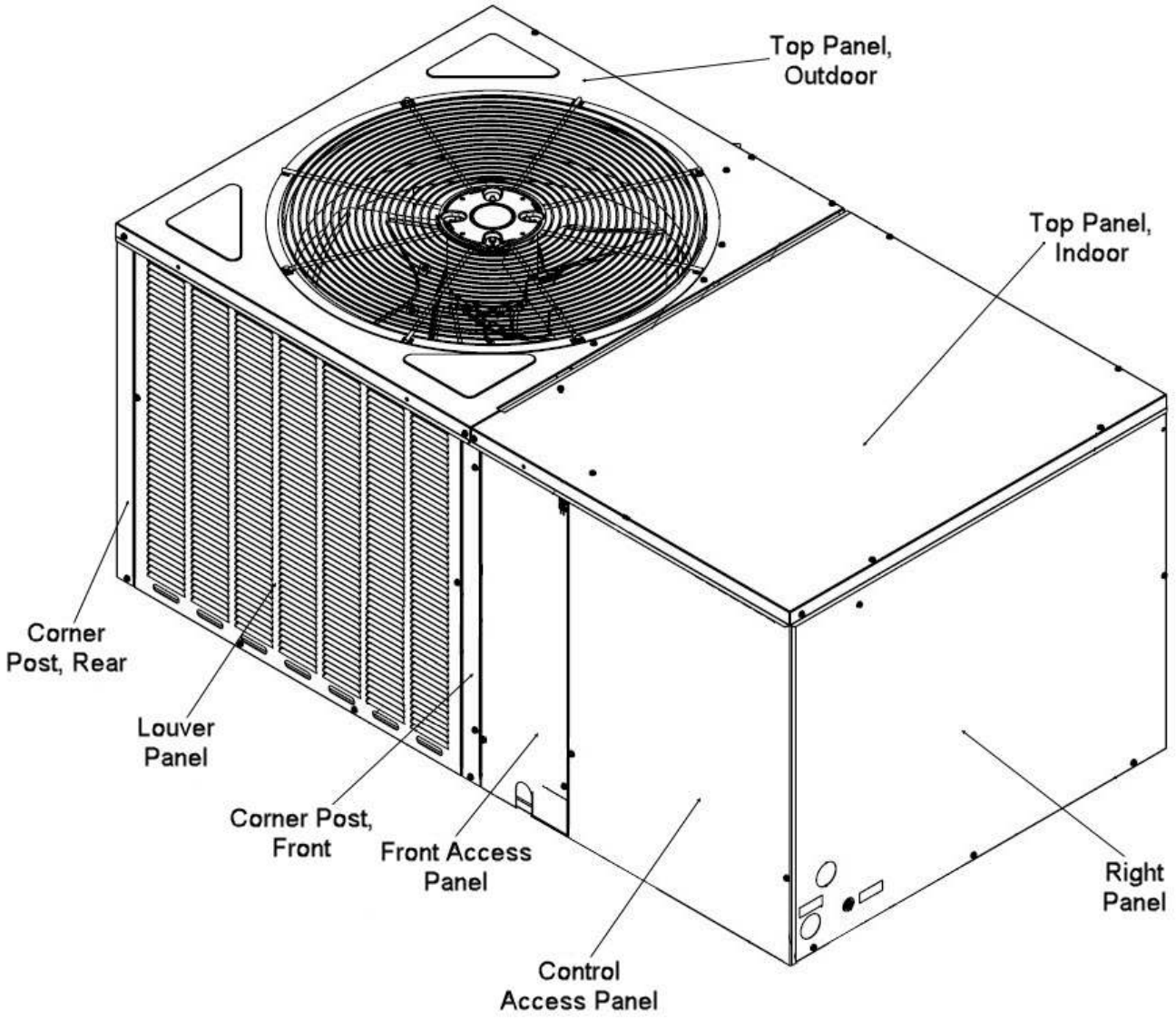

RHPBYB parts breakdown: ADS-105134-18B 2 Exterior Cabinet

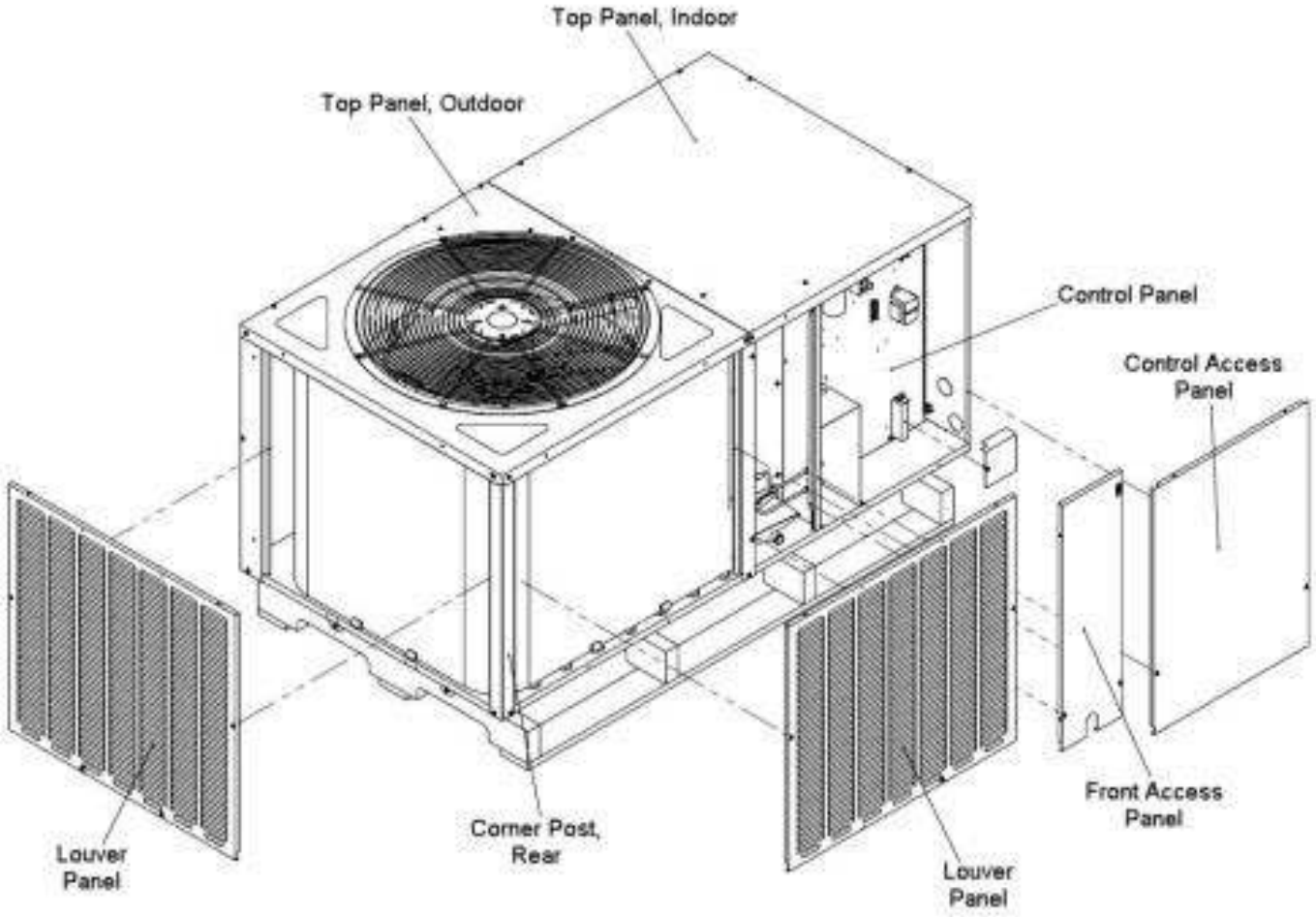

RHPBYB parts breakdown: ADS-105134-18B 3 Outdoor Fan

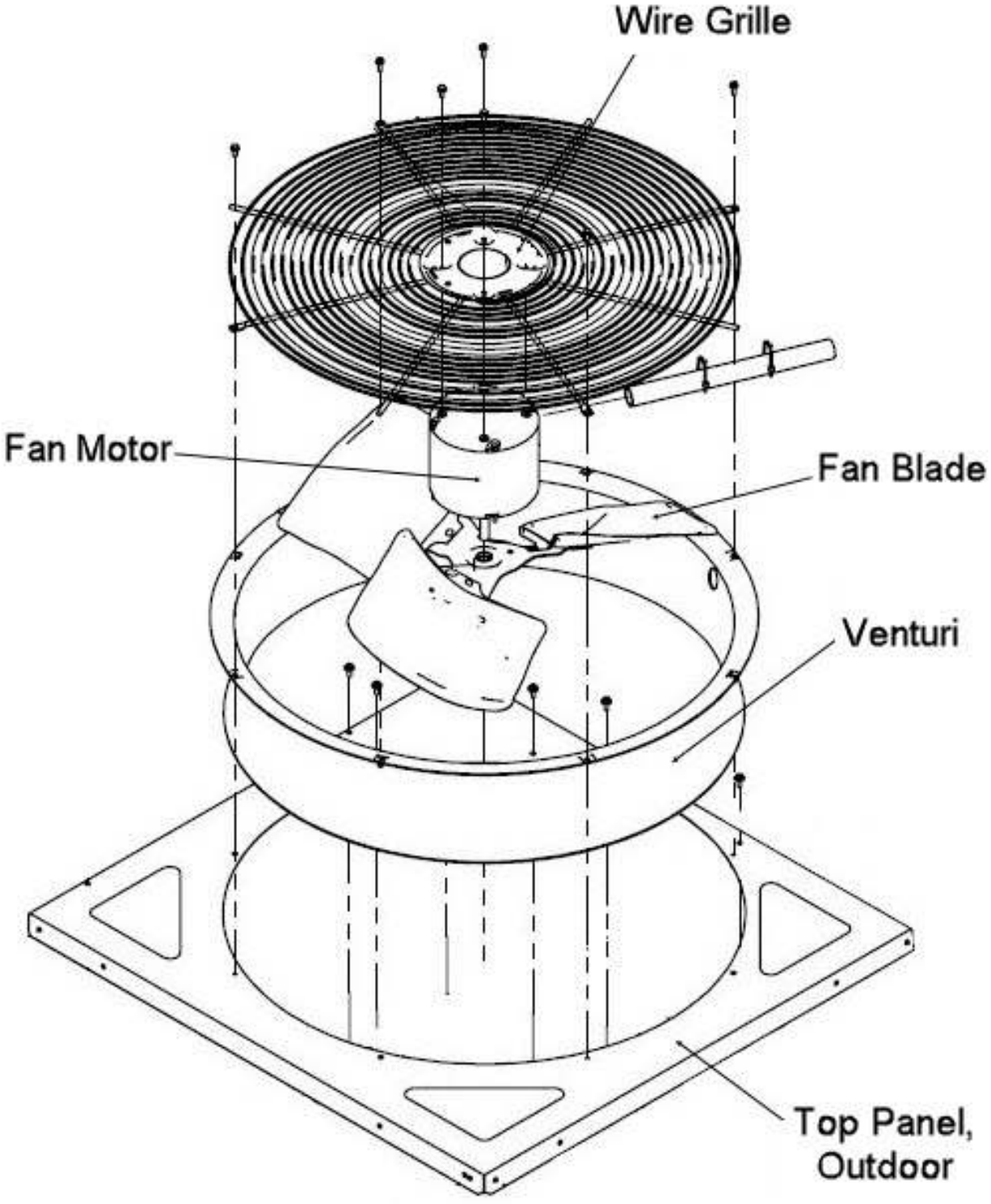

RHPBYB parts breakdown: ADS-105134-18B 4 Internal Cabinet

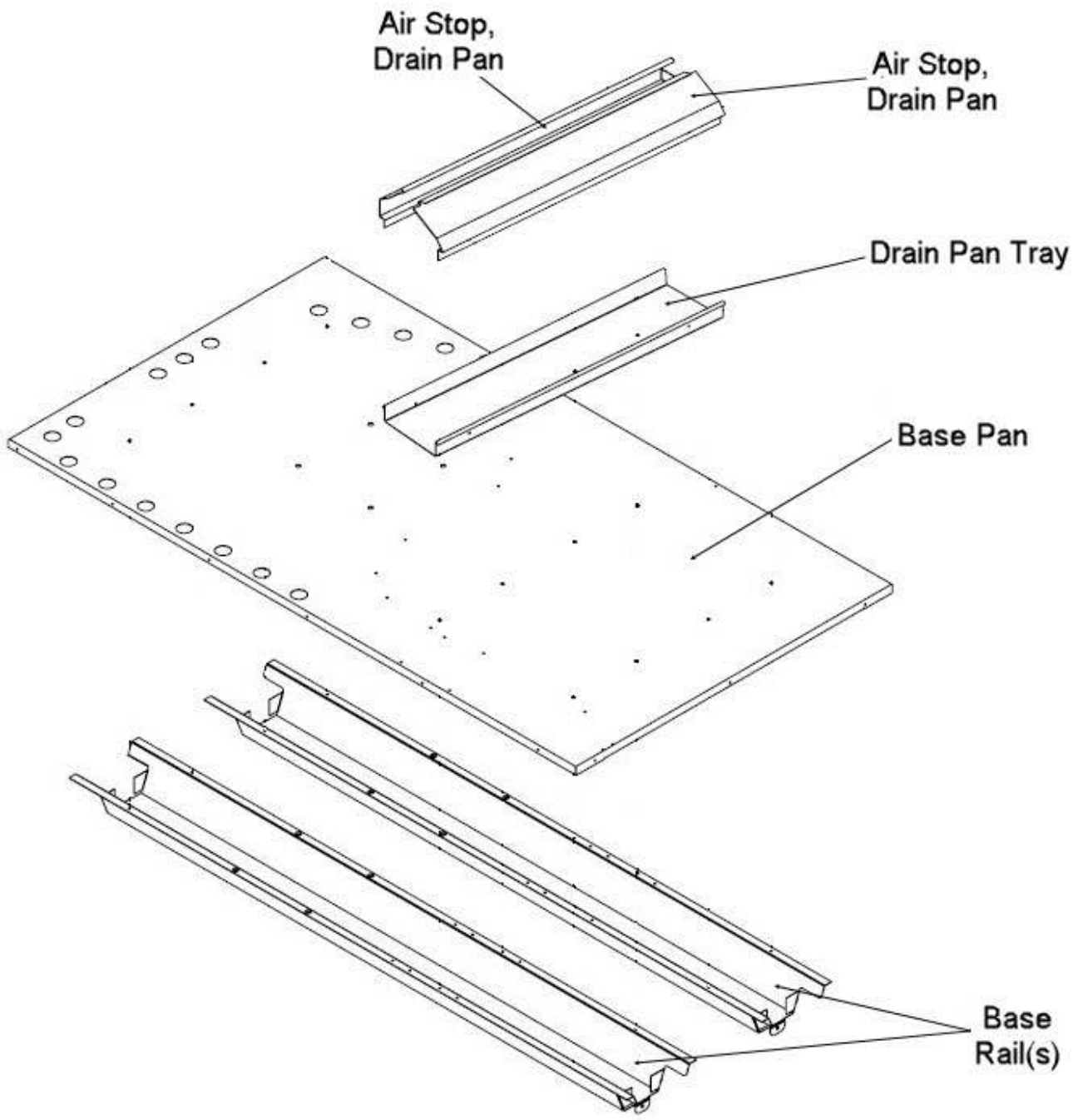

RHPBYB parts breakdown: ADS-105134-18B 5 Internal Cabinet

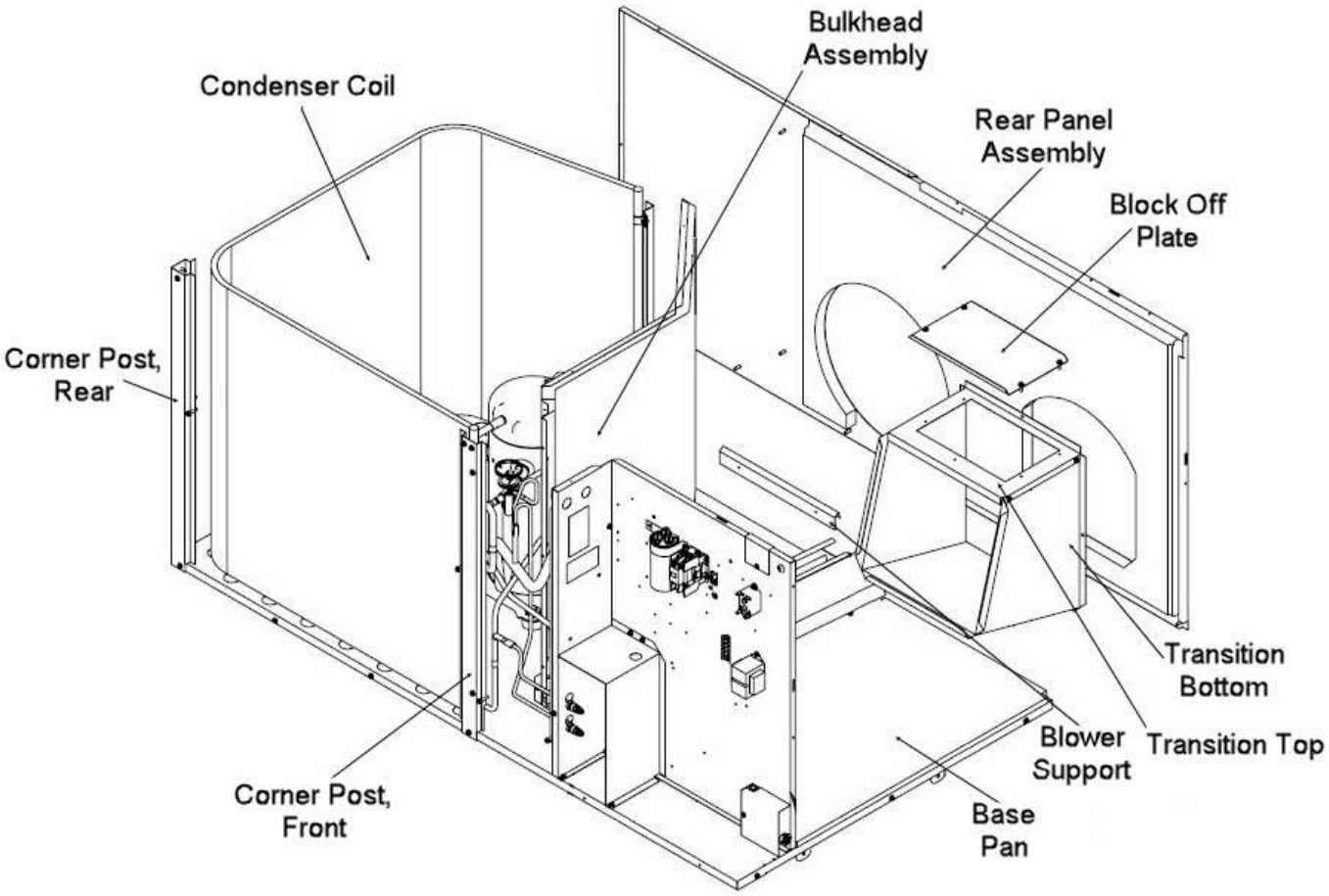

RHPBYB parts breakdown: ADS-105134-18B 6 Internal Cabinet

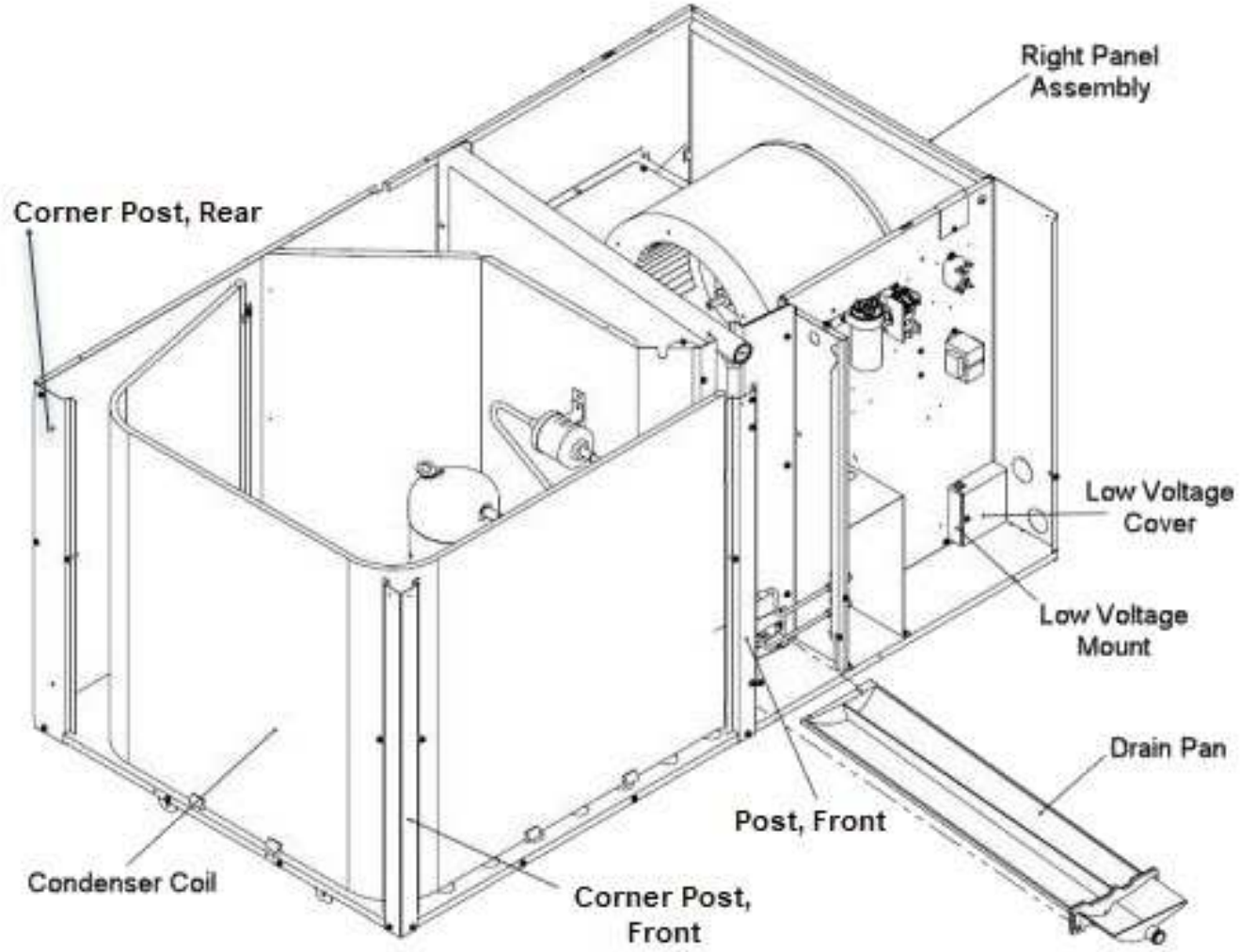

RHPBYB parts breakdown: ADS-105134-18B 7 Internal Cabinet

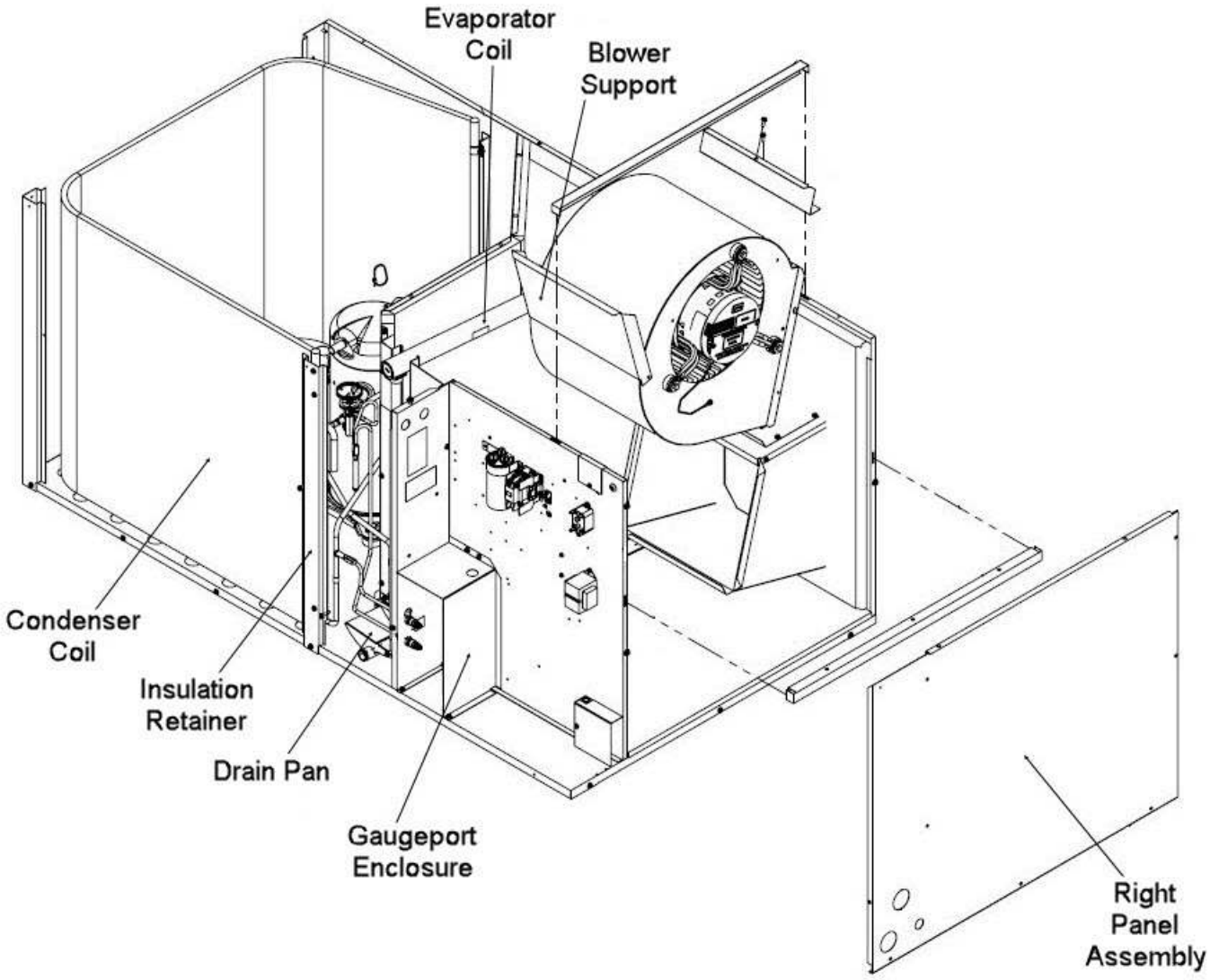

RHPBYB parts breakdown: ADS-105134-18B 8 Control Panel

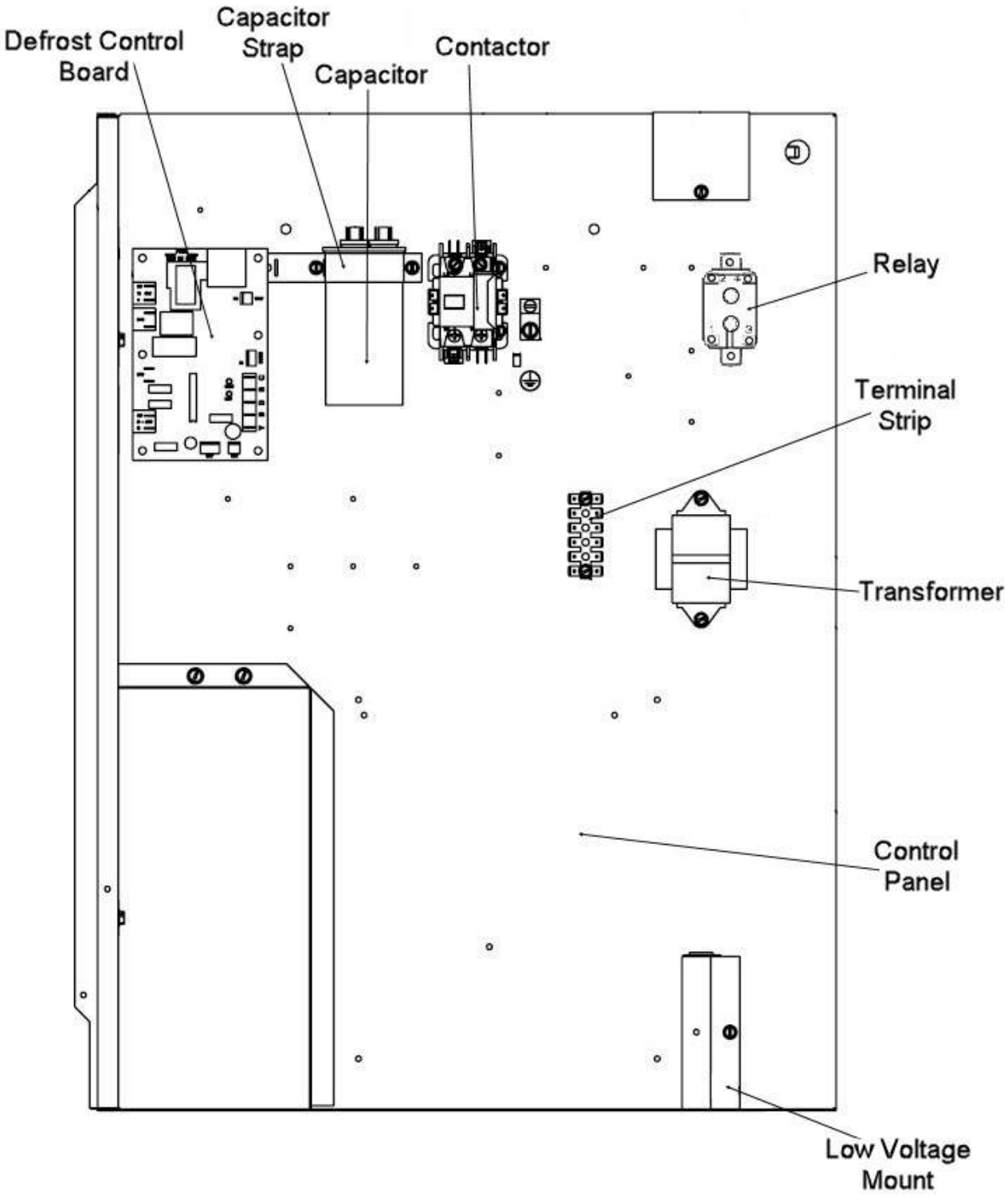

RHPBYB parts breakdown: ADS-105134-18B 9 Blower Assembly

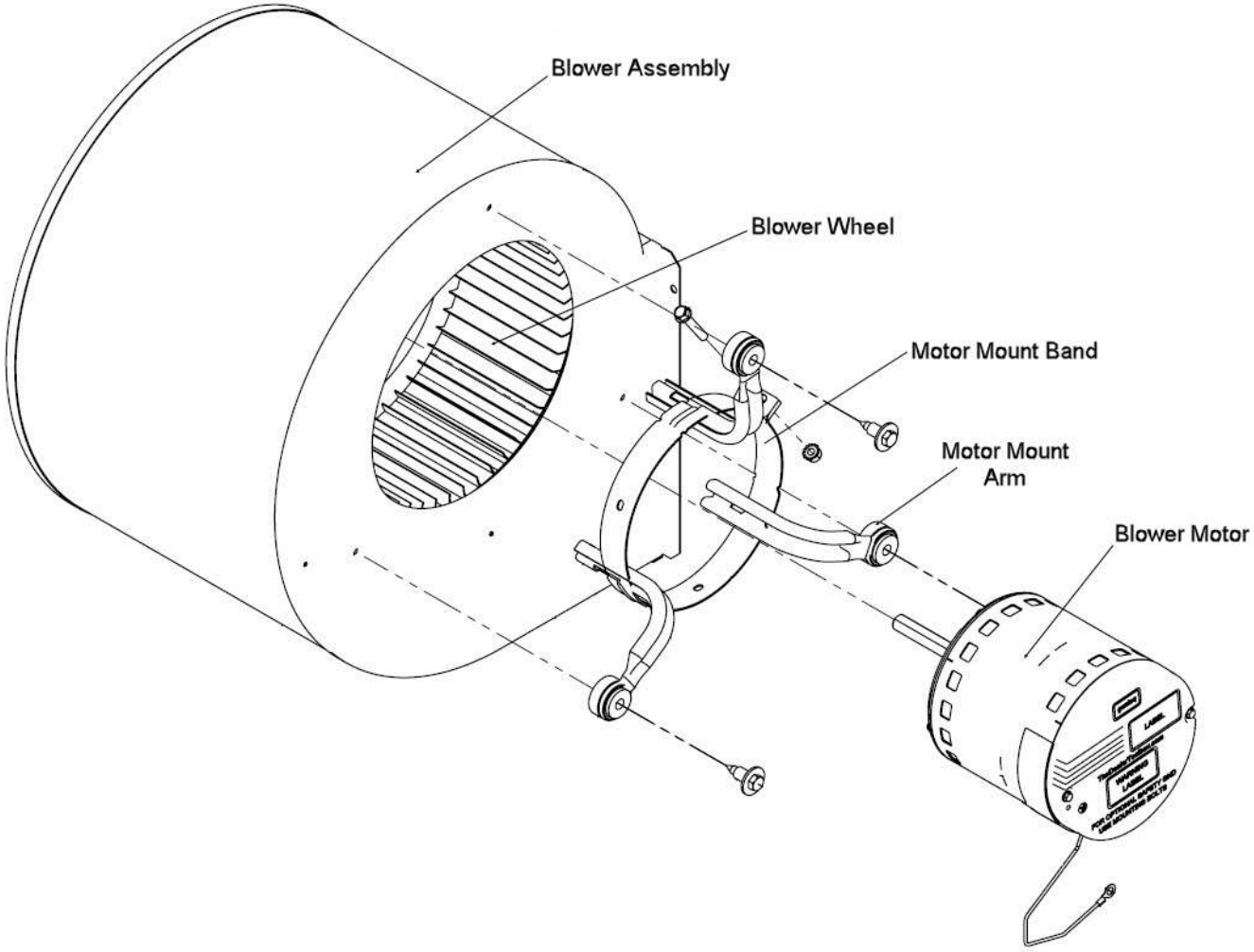

Compressor

Part No.	Description	Qty	Replaced By	Fits Models
55-102045-250	Compressor	1		RHPBYB030AJT000NA (incl. variants)
55-102045-252	Compressor	1		RHPBYB036AJT000NA (incl. variants)
55-102045-254	Compressor	1		RHPBYB042AJT000NA (incl. variants)
55-102045-256	Compressor	1		RHPBYB048AJT000NA (incl. variants)
55-109517-52	Compressor	1		RHPBYB024AJT000NA (incl. variants)
63-20072-03	Compressor Mounting Screw (1-1/2 in. long)	4		All models
45-100834-80	Copeland Molded Plug Wiring Harness	1		All models
56-18518-06	Mounting Grommet - Compressor	4		All models

Motors & fans

Part No.	Description	Qty	Replaced By	Fits Models
70-100840-01	Blower Assembly	1		RHPBYB024AJT000NA, RHPBYB030AJT000NA (incl. variants)
AS-108001-22	Blower Assembly - 4 Ton	1		RHPBYB048AJT000NA (incl. variants)
70-100840-02	Blower Assembly-Housing and Wheel only	1		RHPBYB036AJT000NA, RHPBYB042AJT000NA, RHPBYB048AJT000NA (incl. variants)
51-100998-38	Condenser Motor - 1/2 hp 208-230/1/50-60 (1075 rpm/1 speed)	1		RHPBYB042AJT000NA, RHPBYB048AJT000NA (incl. variants)
51-102500-10	Condenser Motor - 1/3 hp 208-230/1/60 (825 rpm/1 speed)	1		RHPBYB024AJT000NA, RHPBYB030AJT000NA, RHPBYB036AJT000NA (incl. variants)
70-101323-77	Fan Blade - 23.95 in. - 21 degree Pitch	1		RHPBYB042AJT000NA, RHPBYB048AJT000NA (incl. variants)
70-101323-20K	Fan Blade Kit	1		RHPBYB024AJT000NA, RHPBYB030AJT000NA (incl. variants)
70-102345-01K	Fan Blade Kit	1		RHPBYB036AJT000NA (incl. variants)
51-108728-135	Motor - Ensite Air (230V - 1/2 hp)	1		RHPBYB024AJT000NA (incl. variants)
51-108728-137	Motor - Ensite Air (230V - 1/2 hp)	1		RHPBYB030AJT000NA (incl. variants)
51-108729-136	Motor - Ensite Air (230V - 3/4 hp)	1		RHPBYB036AJT000NA (incl. variants)
51-108729-138	Motor - Ensite Air (230V - 3/4 hp)	1		RHPBYB042AJT000NA (incl. variants)
51-106545-00	Motor - SelecTech Gen 3 (230V - 1/2 hp) - BLANK	1		RHPBYB024AJT000NA, RHPBYB030AJT000NA (incl. variants)
51-106546-59	Motor - SelecTech Gen 3 (230V - 3/4 hp)	1		RHPBYB048AJT000NA (incl. variants)
51-106546-00	Motor - SelecTech Gen 3 (230V - 3/4 hp) - BLANK	1		RHPBYB036AJT000NA, RHPBYB042AJT000NA, RHPBYB048AJT000NA (incl. variants)
70-19929-09	Motor Mount Arm w/Grommet	3		All models
70-19927-03	Motor Mount Band	1		All models

Electrical

Part No.	Description	Qty	Replaced By	Fits Models
43-25133-21	Capacitor - 30/5/370 Dual Round	1		RHPBYB024AJT000NA (incl. variants)
43-25133-35	Capacitor - 35/5/370 Dual Round	1		RHPBYB030AJT000NA (incl. variants)
43-25133-44	Capacitor - 40/5/370 Dual Round	1		RHPBYB036AJT000NA (incl. variants)
43-101665-65	Capacitor - 45/15/370 Dual Round	1		RHPBYB048AJT000NA (incl. variants)
43-101665-74	Capacitor 40/15/440 Dual Round	1		RHPBYB042AJT000NA (incl. variants)
42-109499-06K	Contactor 32A XMC0-321 1P 1PH A2L	1		All models
47-102684-204	Defrost Control Board Kit	1		All models
45-19000-01	Ground Lug	1		All models
45-18058-07	Ivory Twist-On Wire Connector - 24-16 AWG	1		All models
47-109642-01	Sensor A2L (Sensirion)	1		All models
PD476604	Sensor Kit	1		All models
45-23591-01	Terminal Strip	1		All models
46-100836-05	Transformer	1		All models
45-104222-03	Wiring Harness	1		All models
61-26149-08	Wiring Harness - Reversing Valve	1		All models

Part No.	Description	Qty	Replaced By	Fits Models
45-109867-13	Wiring Harness Assembly - RDS	1		All models

Valves & switches

Part No.	Description	Qty	Replaced By	Fits Models
61-101821-02	Bulkhead Valve Assembly	2		All models
47-102290-01K	High Pressure Limit Kit - Auto Reset	1		All models
47-102240-02	Low Pressure Limit - Auto Reset	1		All models
61-102498-06	Reversing Valve	1		RHPBYB036AJT000NA, RHPBYB042AJT000NA, RHPBYB048AJT000NA (incl. variants)
61-102498-09K	Reversing Valve Kit	1		RHPBYB024AJT000NA, RHPBYB030AJT000NA (incl. variants)
61-18551-01	Valve Core	4		All models

Coil & refrigeration

Part No.	Description	Qty	Replaced By	Fits Models
83-102278-03	Cap Tube Asembly	1/2		RHPBYB042AJT000NA, RHPBYB048AJT000NA (incl. variants)
83-102278-01	Cap Tube Assembly	1/2		RHPBYB024AJT000NA (incl. variants)
83-102278-02	Cap Tube Assembly	1/2		RHPBYB030AJT000NA (incl. variants)
83-104499-02	Charge Compensator	1		RHPBYB030AJT000NA (incl. variants)
83-104499-01K	Charge Compensator Kit	1		RHPBYB024AJT000NA (incl. variants)
AS-100793-15	Condenser Coil	1		RHPBYB024AJT000NA (incl. variants)
AS-100793-16	Condenser Coil	1		RHPBYB036AJT000NA (incl. variants)
AS-103414-01	Condenser Coil	1		RHPBYB042AJT000NA, RHPBYB048AJT000NA (incl. variants)
AS-103414-02	Condenser Coil	1		RHPBYB030AJT000NA (incl. variants)
82-18419-01	Copper Tee	1		RHPBYB024AJT000NA, RHPBYB030AJT000NA (incl. variants)
82-21915-10	Crossover Tube	9		RHPBYB030AJT000NA (incl. variants)
82-21915-12	Crossover Tube	7		RHPBYB030AJT000NA (incl. variants)
AE-57060-12	Crossover Tube	13		RHPBYB042AJT000NA, RHPBYB048AJT000NA (incl. variants)
AE-77999-01	Crossover Tube	9/13		RHPBYB024AJT000NA, RHPBYB036AJT000NA (incl. variants)
AE-78127-01	Crossover Tube	11		RHPBYB042AJT000NA, RHPBYB048AJT000NA (incl. variants)
83-102272-01	Distributor Assembly	1		RHPBYB024AJT000NA, RHPBYB036AJT000NA (incl. variants)
83-102272-02	Distributor Assembly	1		RHPBYB030AJT000NA, RHPBYB042AJT000NA, RHPBYB048AJT000NA (incl. variants)
83-109215-01	Distributor Assembly	1/2		RHPBYB036AJT000NA (incl. variants)
AS-100792-03	Evaporator Coil	1		RHPBYB036AJT000NA (incl. variants)
AS-104684-14	Evaporator Coil (Tin Plated)	1		RHPBYB024AJT000NA (incl. variants)
AS-104684-15	Evaporator Coil (Tin Plated)	1		RHPBYB030AJT000NA (incl. variants)
AS-104684-16	Evaporator Coil (Tin Plated)	1		RHPBYB042AJT000NA, RHPBYB048AJT000NA (incl. variants)
83-104825-03	Liquid Line Filter Drier (Bi-Directional)	1		All models
61-110300-05	Thermostatic Expansion Valve (TXV) - Indoor (Cooling)	1		RHPBYB024AJT000NA, RHPBYB030AJT000NA (incl. variants)
61-110300-06	Thermostatic Expansion Valve (TXV) - Indoor (Cooling)	1		RHPBYB036AJT000NA (incl. variants)
61-110300-07	Thermostatic Expansion Valve (TXV) - Indoor (Cooling)	1		RHPBYB042AJT000NA, RHPBYB048AJT000NA (incl. variants)
61-110299-04	Thermostatic Expansion Valve (TXV) - Outdoor (Heating)	1		RHPBYB036AJT000NA (incl. variants)
61-110300-10	Thermostatic Expansion Valve (TXV) - Outdoor (Heating)	1		RHPBYB024AJT000NA (incl. variants)
61-110300-11	Thermostatic Expansion Valve (TXV) - Outdoor (Heating)	1		RHPBYB030AJT000NA (incl. variants)

Part No.	Description	Qty	Replaced By	Fits Models
61-110300-13	Thermostatic Expansion Valve (TXV) - Outdoor (Heating)	1		RHPBYB042AJT000NA (incl. variants)
61-110300-14	Thermostatic Expansion Valve (TXV) - Outdoor (Heating)	1		RHPBYB048AJT000NA (incl. variants)
64-21106-02	TXV Bulb Strap Mounting Kit	2		All models
45-58286-36-AE	Wire - 18GA GRN/BLK 2/64 38 in.	1		RHPBYB024AJT000NA, RHPBYB030AJT000NA, RHPBYB042AJT000NA (incl. variants)

Cabinet & hardware

Part No.	Description	Qty	Replaced By	Fits Models
83-100635-04	Access Valve Cap	2		All models
68-100801-24	Adhesive Insulation Stripping - 1-1/2 in. x 18 in. x 1/4 in.	1		All models
68-100801-23	Adhesive Insulation Stripping - 1-1/2 in. x 30 in. x 1/4 in.	2		All models
10-100825-01	Air Stop - Drain Pan	1		All models
AE-100825-02	Air Stop - Drainpan	1		All models
10-100810-01	Air Stop - Rear	1		RHPBYB024AJT000NA, RHPBYB030AJT000NA (incl. variants)
10-100810-02	Air Stop - Rear	1		RHPBYB036AJT000NA, RHPBYB042AJT000NA, RHPBYB048AJT000NA (incl. variants)
10-102792-01	Base Rail	2		All models
AE-107958-01H	Basepan	1		All models
AE-100818-01	Blower Support	1		All models
AE-100818-02	Blower Support	1		All models
63-19919-01	Bolt, 1/4-20 x 1-1/2 in.	1		All models
AS-107952-01	Bulkhead Assembly	1		RHPBYB036AJT000NA, RHPBYB042AJT000NA, RHPBYB048AJT000NA (incl. variants)
AS-107952-02	Bulkhead Assembly	1		RHPBYB024AJT000NA, RHPBYB030AJT000NA (incl. variants)
45-17055-03	Bushing - Strain Relief	1		All models
45-17055-06	Bushing - Strain Relief	1		All models
45-17055-07	Bushing - Strain Relief	1	OBSOLETE	All models
45-17055-13	Bushing - Strain Relief	1		All models
64-101148-06	Cable Tie - Double Loop, 7.6"	5		All models
AE-50892-81	Capacitor Strap	1		All models
AS-108009-01	Control Panel Insulation Assembly	1		RHPBYB036AJT000NA, RHPBYB042AJT000NA, RHPBYB048AJT000NA (incl. variants)
AS-108009-02	Control Panel Insulation Assembly	1		RHPBYB024AJT000NA, RHPBYB030AJT000NA (incl. variants)
AE-100839-02	Cover - Low Voltage	1		All models
68-100808-02	Drain Pan	1		All models
AE-100809-01H	Drain Pan Tray	1		All models
68-100846-02	Drain Trap Assembly	1		All models
58-100850-01	Duct Ring - 14 in.	1		All models
AE-101352-01	Enclosure - Gauge Port	1		All models
AE-100776-01	Endplate - Evaporator Front R/03	1/2		RHPBYB024AJT000NA (incl. variants)
AE-100777-01	Endplate - Evaporator Rear R/02	1/2		RHPBYB024AJT000NA (incl. variants)
AE-102132-01	Filter Drier Strap	1		All models
68-42246-01	Gasket - 1,250 ft. long x 1/8 in. thick x 1/2 in. wide	3		All models
63-22368-01	Hex Lock Nut, 7/16 x 20	2		RHPBYB036AJT000NA, RHPBYB048AJT000NA (incl. variants)
63-17189-03	Hex Nut, 1/4-20, w/External Tooth Lock Washer	1		All models
AE-100831-01	Insulation Retainer	2	OBSOLETE	All models
AE-100831-02	Insulation Retainer	1		RHPBYB024AJT000NA, RHPBYB030AJT000NA (incl. variants)

Part No.	Description	Qty	Replaced By	Fits Models
AE-100831-03	Insulation Retainer	1		RHPBYB036AJT000NA, RHPBYB042AJT000NA, RHPBYB048AJT000NA (incl. variants)
AE-100831-05	Insulation Retainer Bulkhead	1		RHPBYB024AJT000NA, RHPBYB030AJT000NA (incl. variants)
68-106510-01	Insulation Wrap -1-5/8 I.D. x 1/2 in. Wall Thickness x 4-1/2 in.	2		All models
64-25340-03	Locking Wing Push Mount Tie	1		All models
AE-100839-01	Mount - Low Voltage	1		All models
AS-100820-02H	Panel	1		RHPBYB036AJT000NA, RHPBYB042AJT000NA, RHPBYB048AJT000NA (incl. variants)
AS-100823-01H	Panel - Access	1		RHPBYB024AJT000NA, RHPBYB030AJT000NA (incl. variants)
AE-100824-01H	Panel - Access Controls	1		RHPBYB024AJT000NA, RHPBYB030AJT000NA (incl. variants)
AE-100824-02H	Panel - Access Controls	1		RHPBYB036AJT000NA, RHPBYB042AJT000NA, RHPBYB048AJT000NA (incl. variants)
AE-100823-02H	Panel - Access Front	1		RHPBYB036AJT000NA, RHPBYB042AJT000NA, RHPBYB048AJT000NA (incl. variants)
AE-100830-01H	Panel - Louver	2		RHPBYB024AJT000NA, RHPBYB030AJT000NA (incl. variants)
AS-100830-03H	Panel - Louver	2		RHPBYB036AJT000NA, RHPBYB042AJT000NA, RHPBYB048AJT000NA (incl. variants)
AE-100816-01	Plate - Block-Off	1		All models
AE-100842-01	Plate Heater Kit Delete	1		All models
AE-106773-01H	Post - Corner	1		RHPBYB036AJT000NA, RHPBYB042AJT000NA, RHPBYB048AJT000NA (incl. variants)
AE-100821-01H	Post - Front	1		RHPBYB024AJT000NA, RHPBYB030AJT000NA (incl. variants)
AS-100821-02H	Post - Front	1		RHPBYB036AJT000NA, RHPBYB042AJT000NA, RHPBYB048AJT000NA (incl. variants)
AE-107946-02H	Post - Front Corner	1		RHPBYB024AJT000NA, RHPBYB030AJT000NA (incl. variants)
AE-107945-01H	Post - Rear Corner	1		RHPBYB036AJT000NA, RHPBYB042AJT000NA, RHPBYB048AJT000NA (incl. variants)
AE-107945-02H	Post - Rear Corner	1		RHPBYB024AJT000NA, RHPBYB030AJT000NA (incl. variants)
AS-107943-01H	Rear Panel Assembly	1		RHPBYB036AJT000NA, RHPBYB042AJT000NA, RHPBYB048AJT000NA (incl. variants)
AS-107943-02H	Rear Panel Assembly	1		RHPBYB024AJT000NA, RHPBYB030AJT000NA (incl. variants)
AS-100820-01H	Right Panel	1		RHPBYB024AJT000NA, RHPBYB030AJT000NA (incl. variants)
63-20072-05	Screw	3		All models
63-22338-06	Screw	2/4		All models
63-42112-03	Sheet Metal Screw w/Sealing Washer, 10-16 x 5/8 in.	25		All models
63-42109-06	Sheet Metal Screw, 10-16 x 1-1/4 in.	4		All models
63-22338-11	Sheet Metal Screw, 10-16 x 3/8 in.	1		All models
63-42109-01	Sheet Metal Screw, 10-16 x 3/8 in.	9		All models
63-42109-03	Sheet Metal Screw, 10-16 x 5/8 in.	1/85/88		All models
63-22153-05	Sheet Metal Screw, 8-18 x 3/8 in.	2/6		All models
45-17057-02	Snap-In Bushing - Conductor Protection	1	OBSOLETE	All models
45-17057-11	Snap-In Bushing - Conductor Protection	1		All models
45-18515-01	Snap-In Bushing - Conductor Protection	1		All models
63-22429-01	Stainless Steel Sheet Metal Screw, 8-18 x 1/2 in.	13/15		All models
68-23618-81	Stripping - 40 ft. Roll	9		All models
63-100404-06	Thread-Forming Screw (black), 10-32 x 7/16 in.	4		All models
63-22487-01	Thread-Forming Screw, 10-32 x 1/2 in.	1		All models
63-100404-02	Thread-Forming Screw, 12-24 x 7/16 in.	4		All models

Part No.	Description	Qty	Replaced By	Fits Models
AS-107950-01H	Top Panel - Indoor	1		All models
AS-107948-01H	Top Panel - Outdoor	1		All models
AE-107960-01	Transition - Top	1		All models
82-20380-04	Tube	2	OBSOLETE	RHPBYB030AJT000NA (incl. variants)
68-104464-10	Venturi	1		All models
64-17606-04	Wire & Cable Tie - Nylon Black - 11-1/2 in.	4		All models
64-101354-01	Wire Clip - Snap In	3		All models
95-105939-02	Wire Grille	1		All models