Rheem RHPCYB Package Unit Replacement Parts List

Parts list RP-RHM-RHPCYB | Updated Nov 2026 | 248 parts | 20 model numbers

Genuine Rheem OEM part numbers for the models listed below, compiled from Rheem Manufacturing's service parts catalog. Quantities are per unit. Where Rheem has replaced a part number, the current number is shown under Replaced By. Always confirm the full model and serial number of the unit before ordering.

Models covered

RHPCYB036ACT000AAAA0, RHPCYB048ACT000AAAA0, RHPCYB048ACU000AAAA0, RHPCYB048ADT000AAAA0, RHPCYB060ACT000AAAA0, RHPCYB060ADT000AAAA0, RHPCYB072ACT0, RHPCYB072ACT000AAAA0, RHPCYB072ACT1, RHPCYB072ACT2, RHPCYB072ACU0, RHPCYB072ACU000AAAA0, RHPCYB072ACU1, RHPCYB072ACU2, RHPCYB072ADT0, RHPCYB072ADT000AAAA0, RHPCYB072ADT2, RHPCYB072ADU0, RHPCYB072AYT0, RHPCYB072AYU0

RHPCYB parts breakdown: ADS-105132-01C 10 Control Box HP

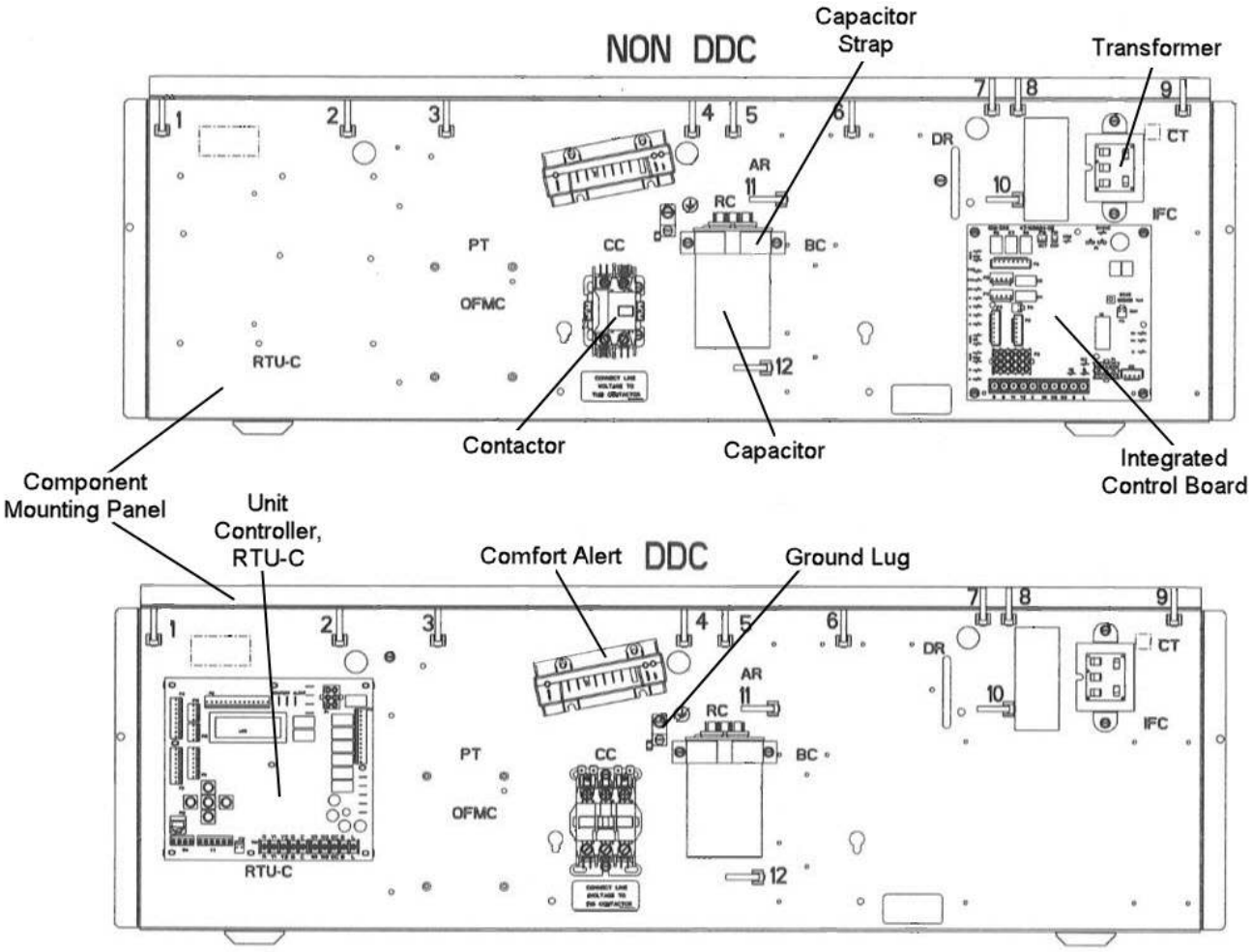

RHPCYB parts breakdown: ADS-105132-01C 11 Electric Heat

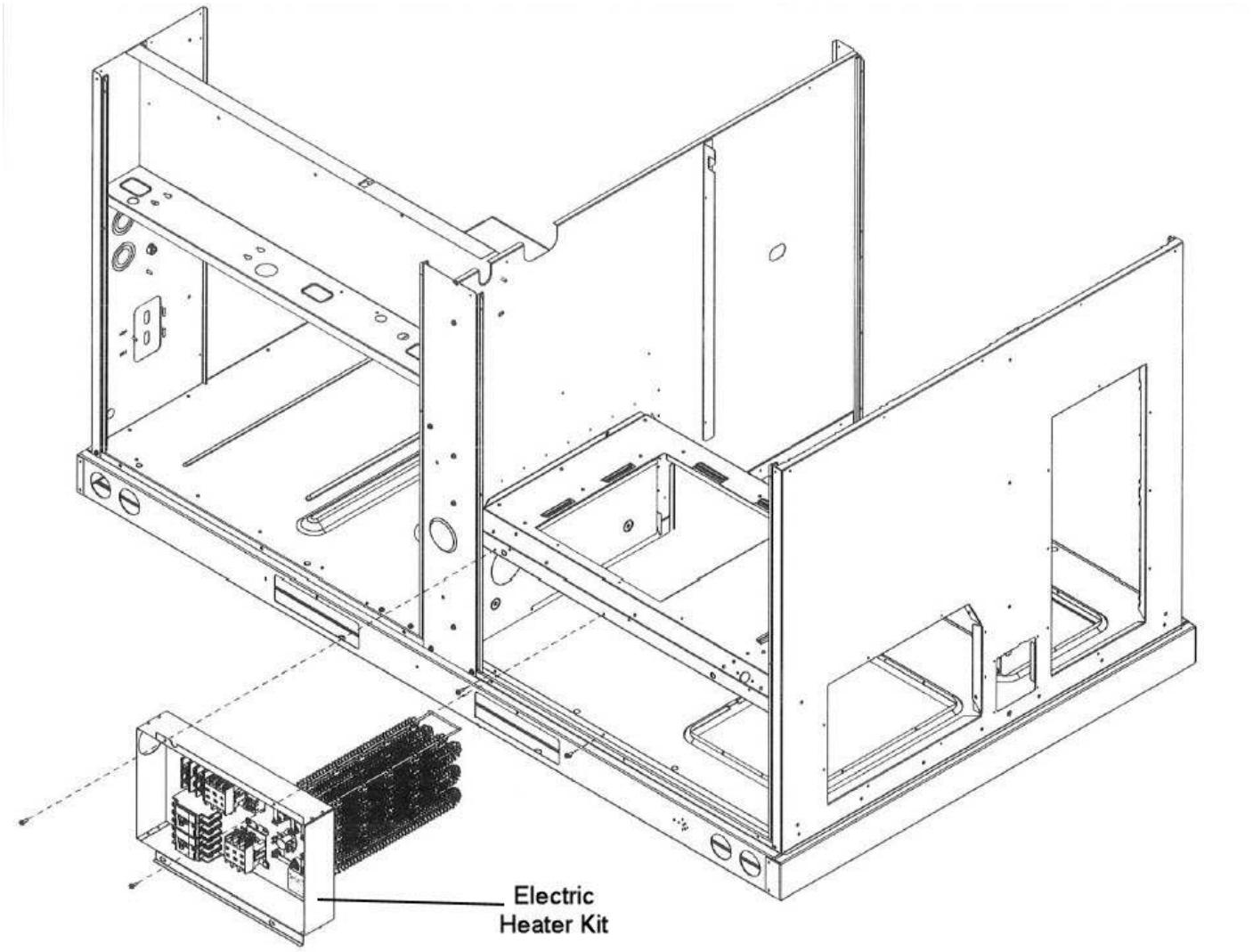

RHPCYB parts breakdown: ADS-105132-01C 12 RV-LPC-HPC

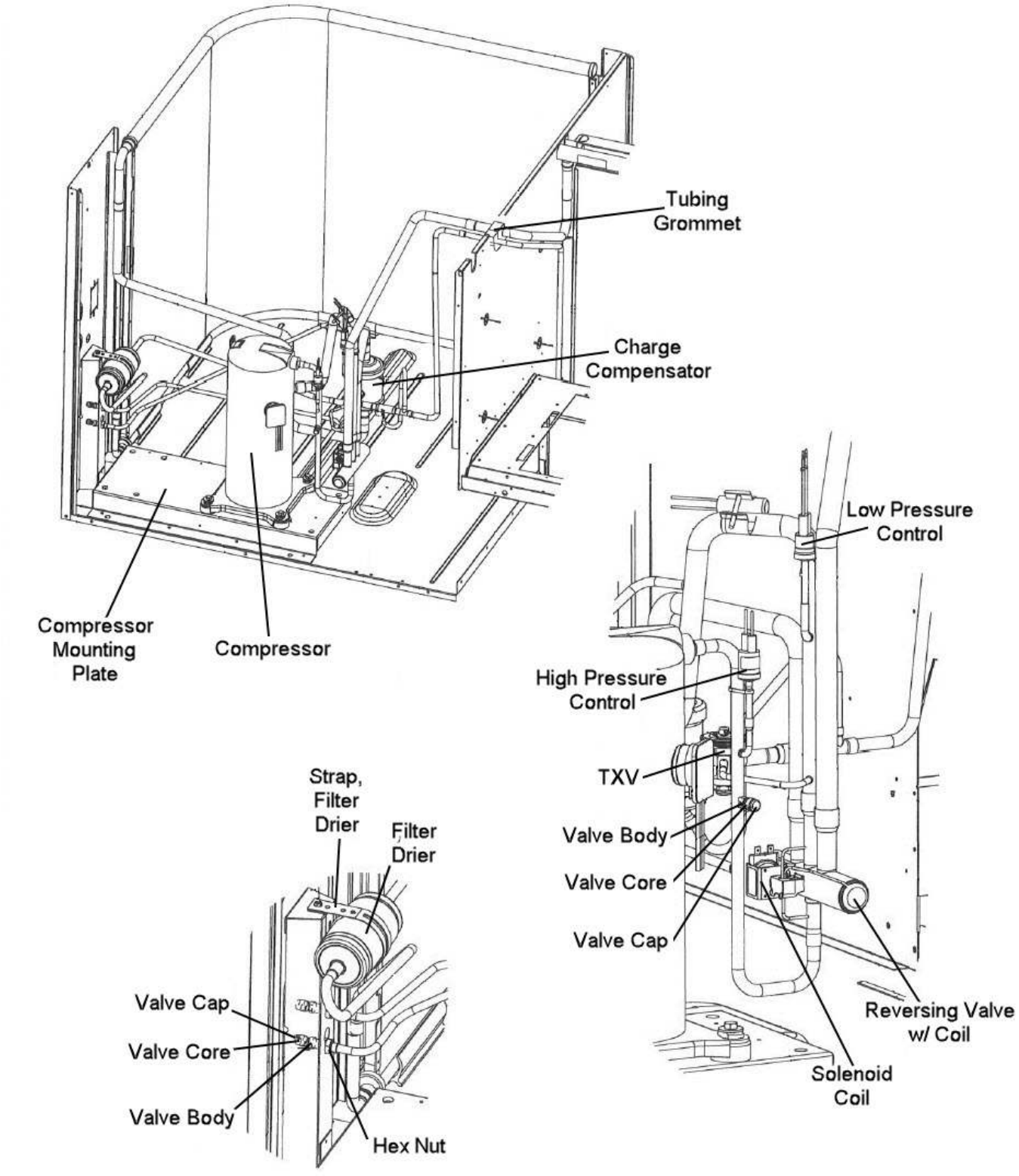

RHPCYB parts breakdown: ADS-105132-01C 13 Drain Pan Sensor

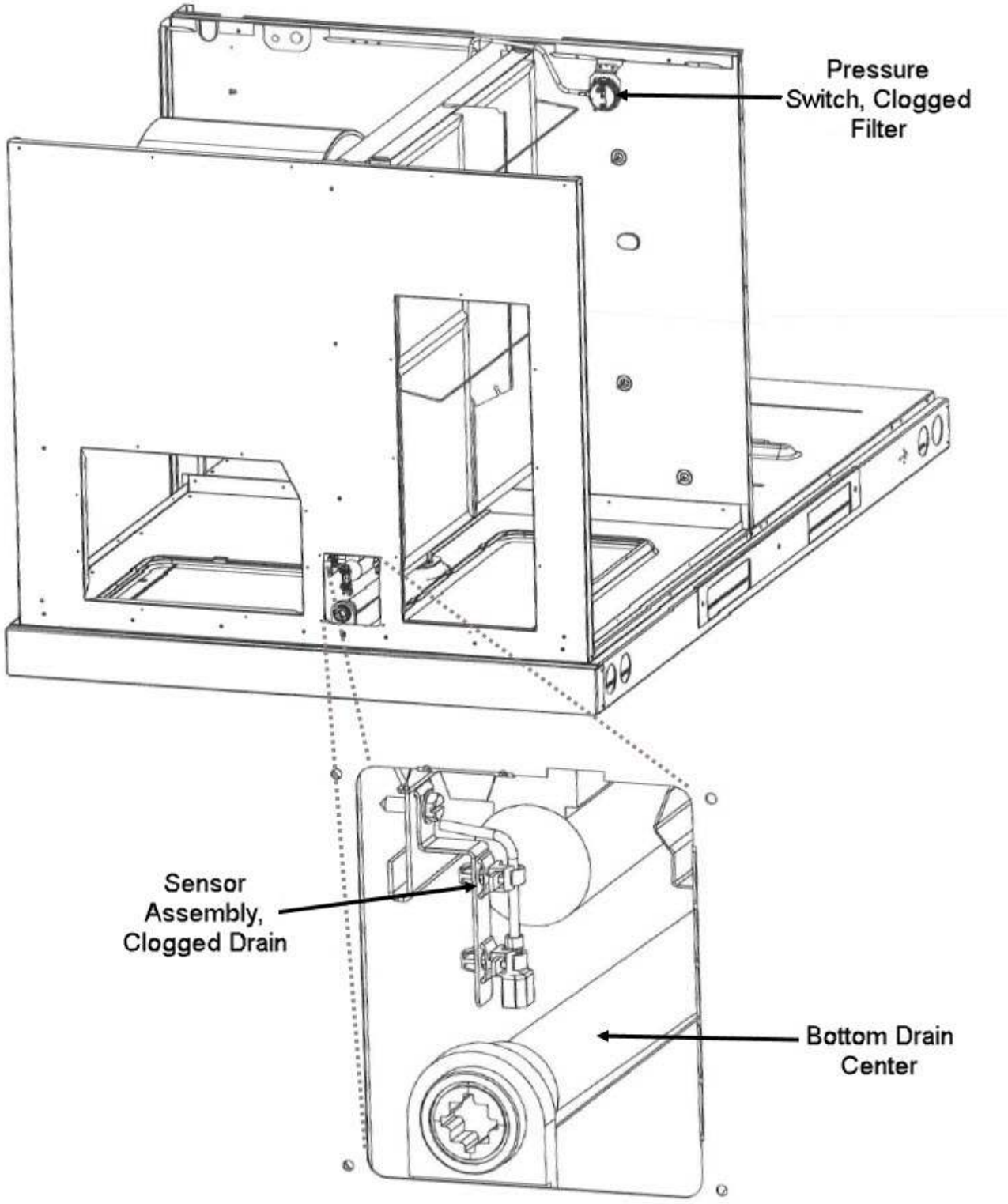

RHPCYB parts breakdown: ADS-105132-01C 14 Filter Drier 2C Low Voltage Shield

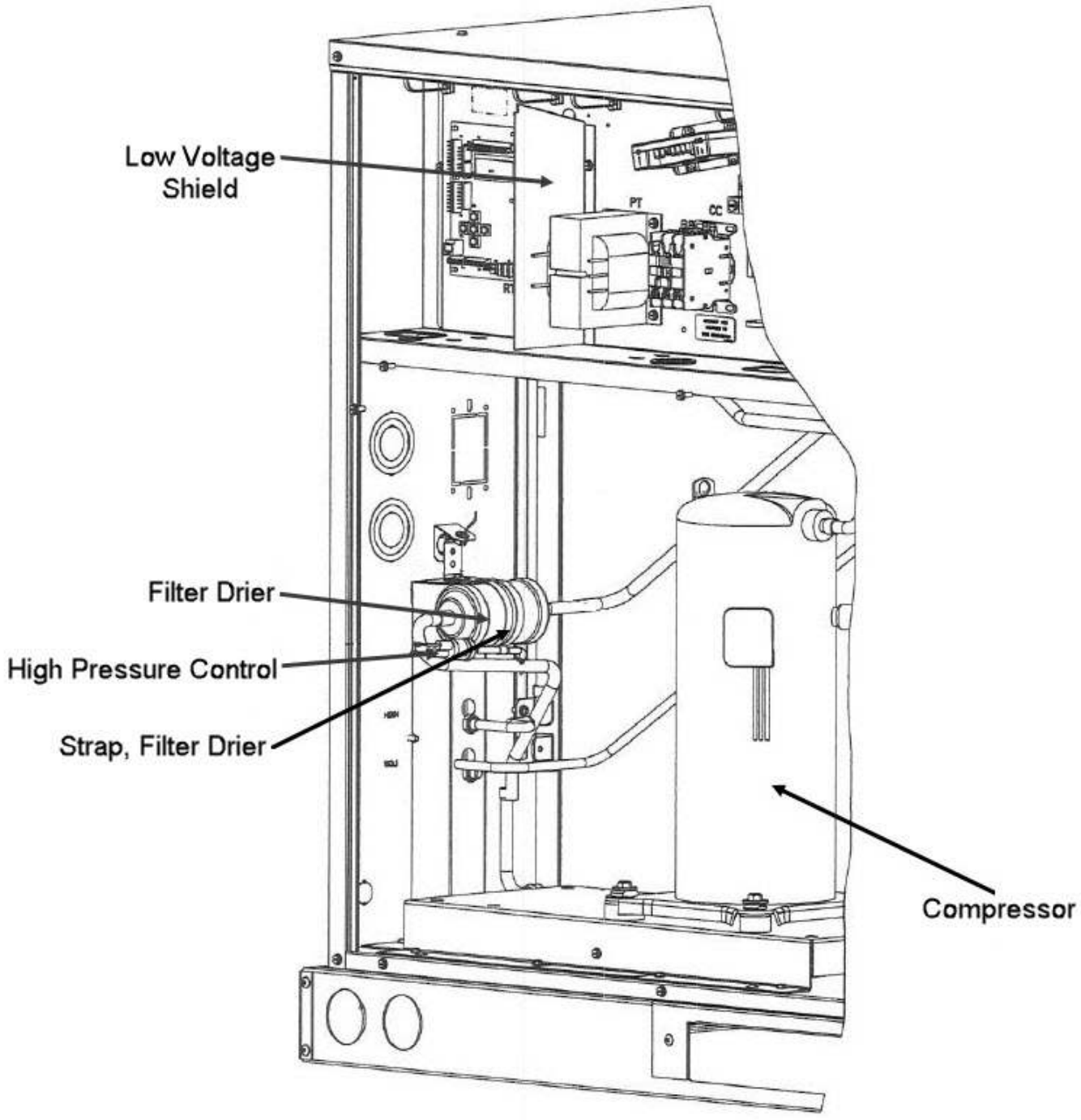

RHPCYB parts breakdown: ADS-105132-01C 15 Blower Assy

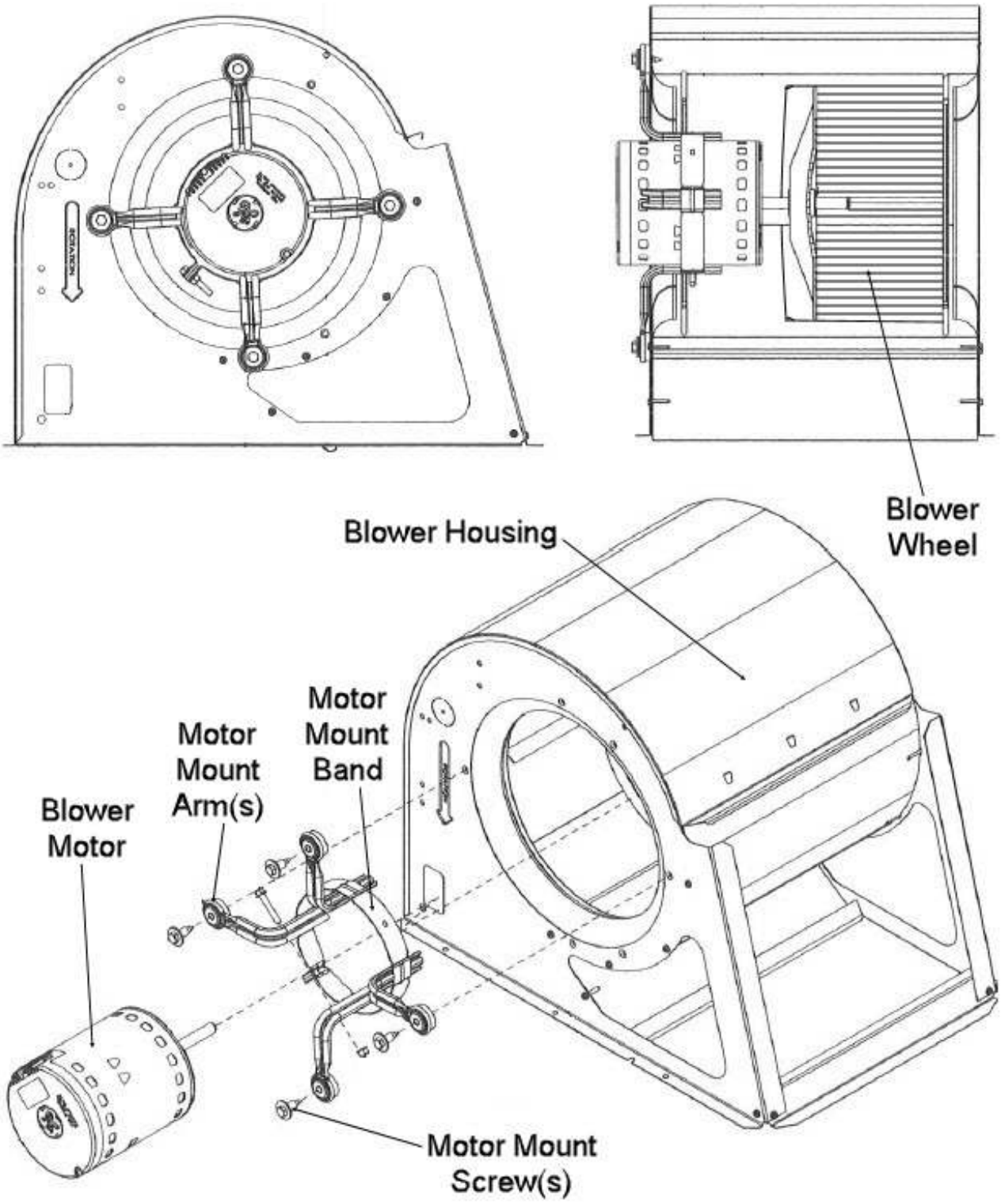

RHPCYB parts breakdown: ADS-105132-01C 16 TXV-Charge Compensator

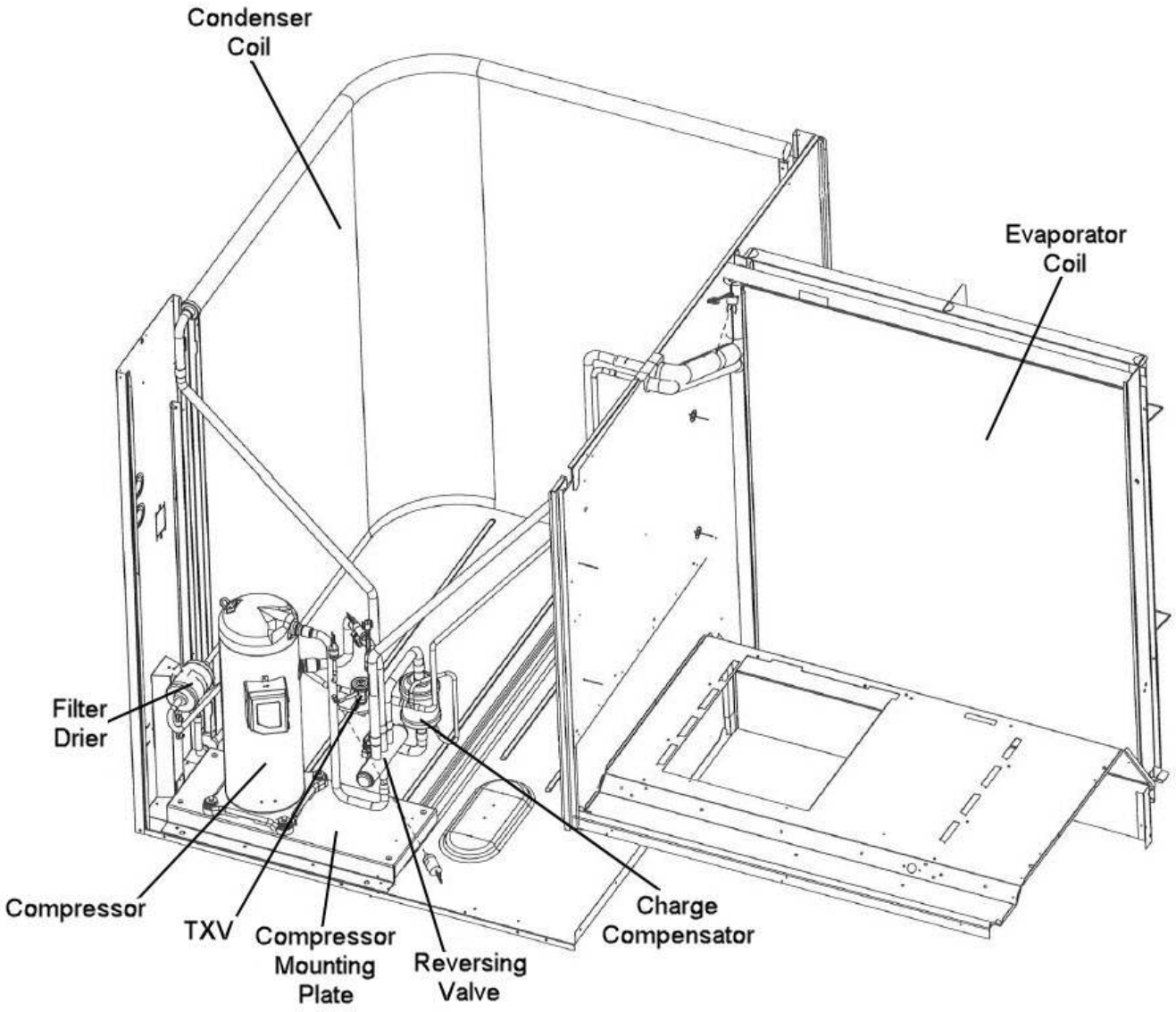

RHPCYB parts breakdown: ADS-105132-01C 1 Base Assembly

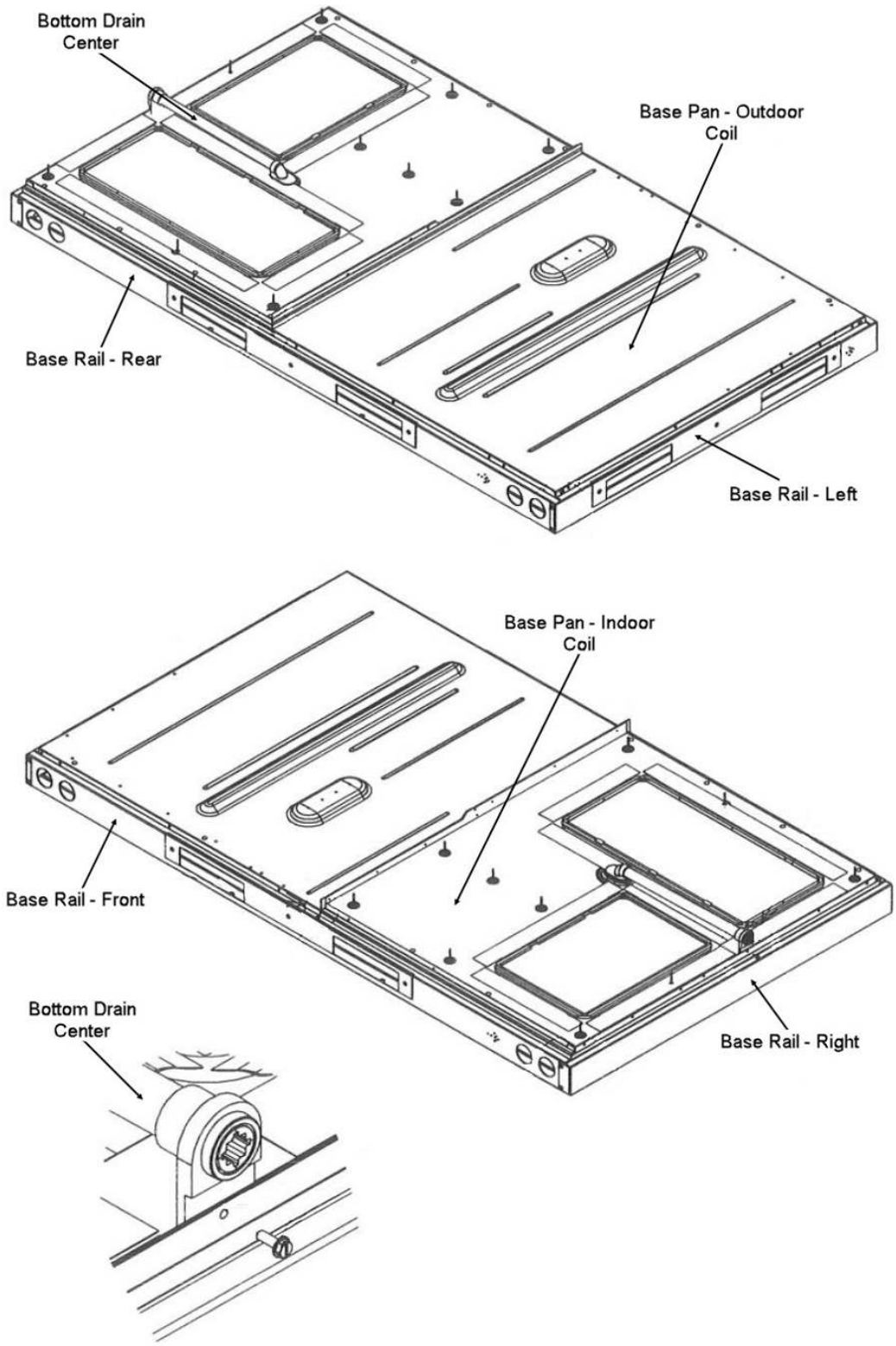

RHPCYB parts breakdown: ADS-105132-01C 2 Rear Post Bulkhead Assy

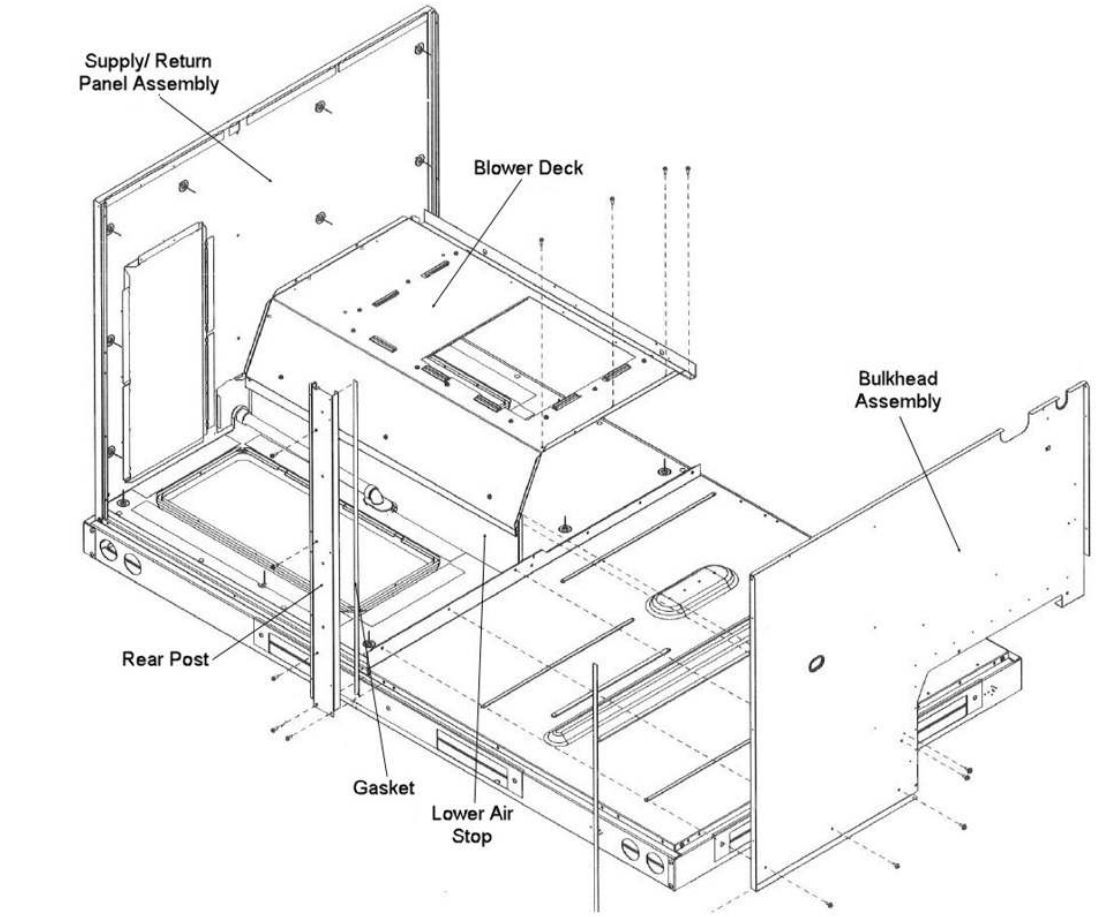

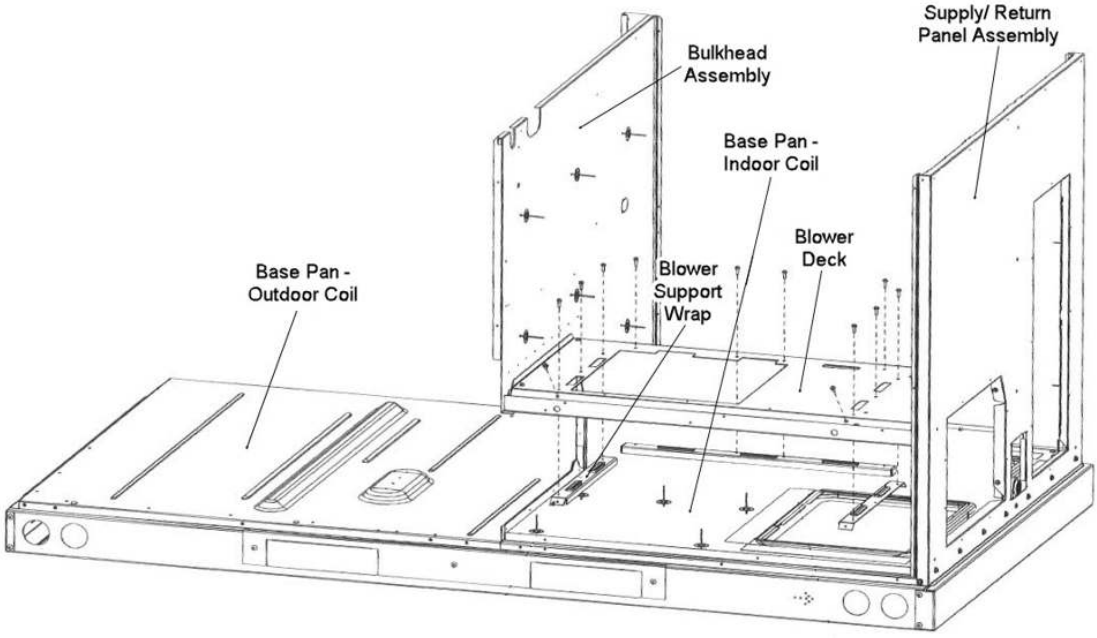

RHPCYB parts breakdown: ADS-105132-01C 3 Interior View

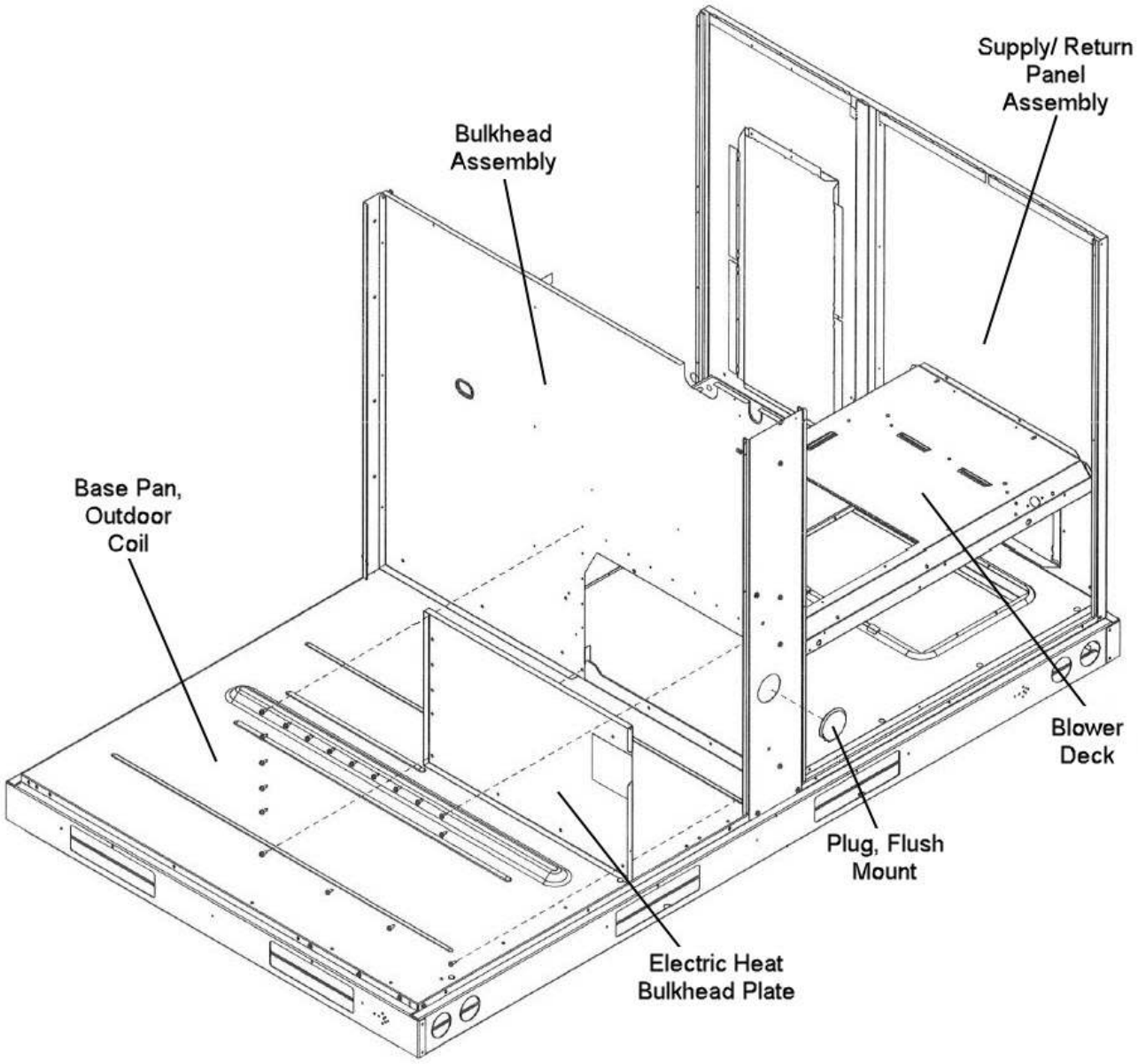

RHPCYB parts breakdown: ADS-105132-01C 4 Filter Rack Assembly

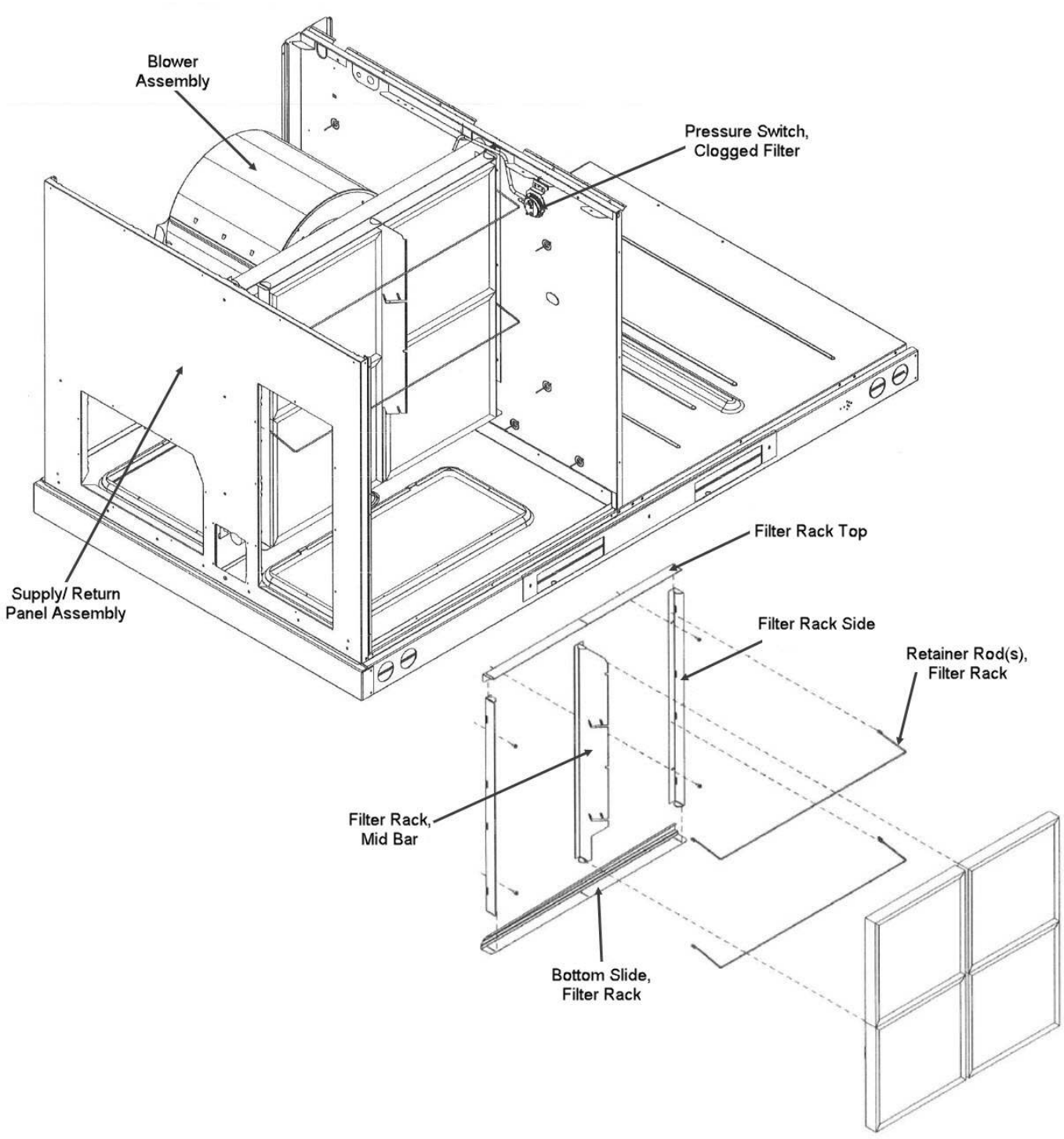

RHPCYB parts breakdown: ADS-105132-01C 5 Cabinet Assy Front 2C Right

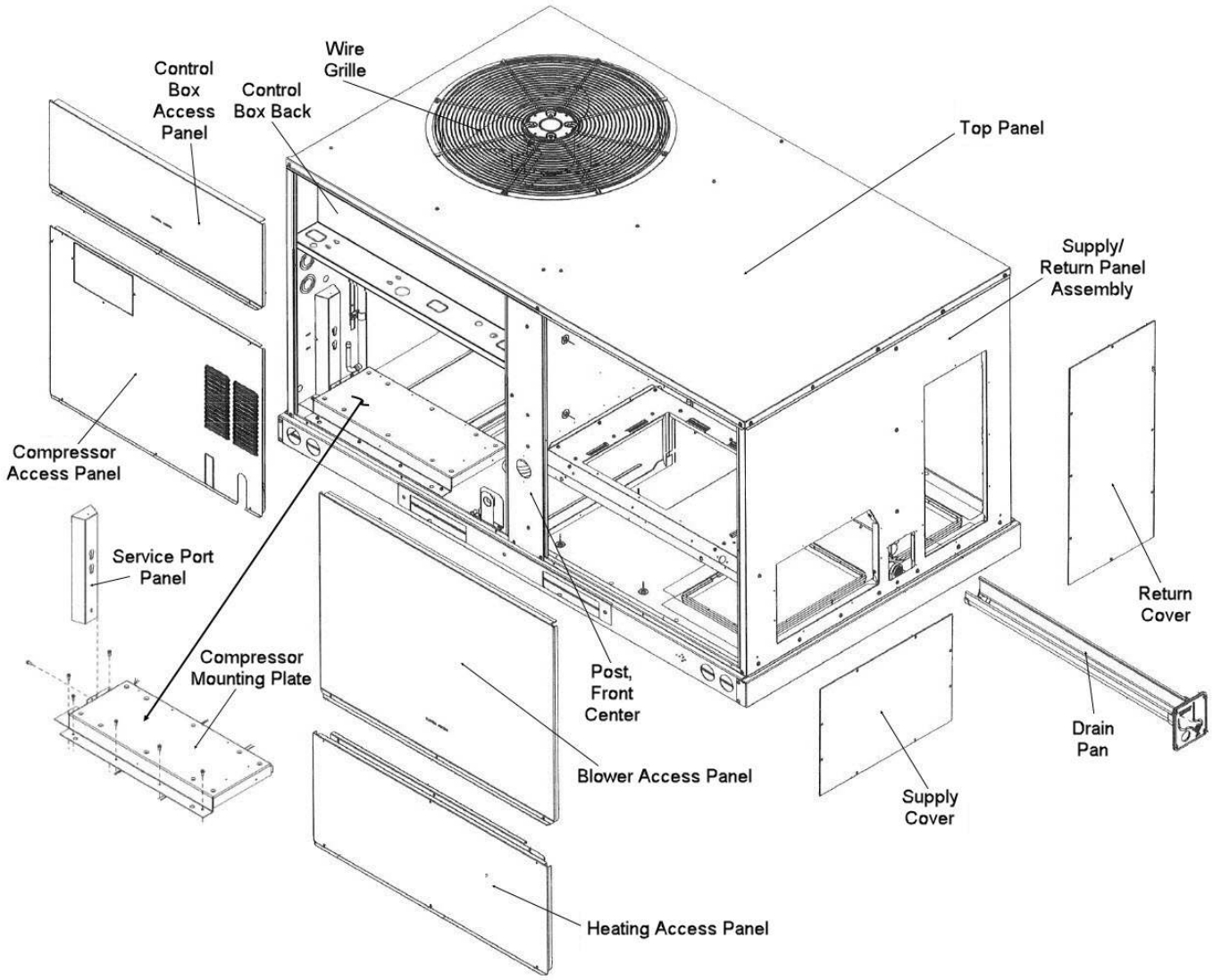

RHPCYB parts breakdown: ADS-105132-01C 6 Cabinet Assy Hinged Front 2C Right

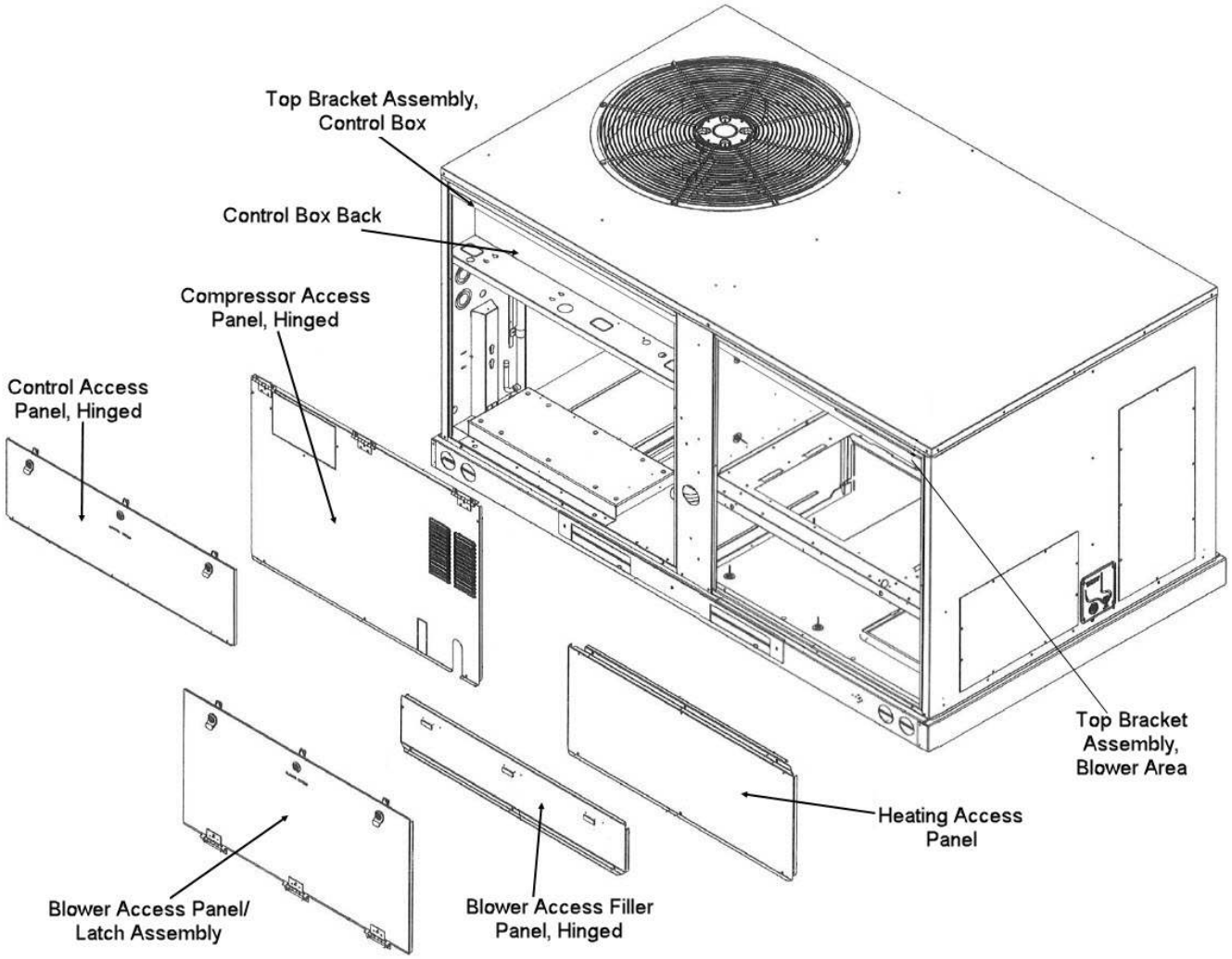

RHPCYB parts breakdown: ADS-105132-01C 7 Cabinet Assy Rear 2C Left

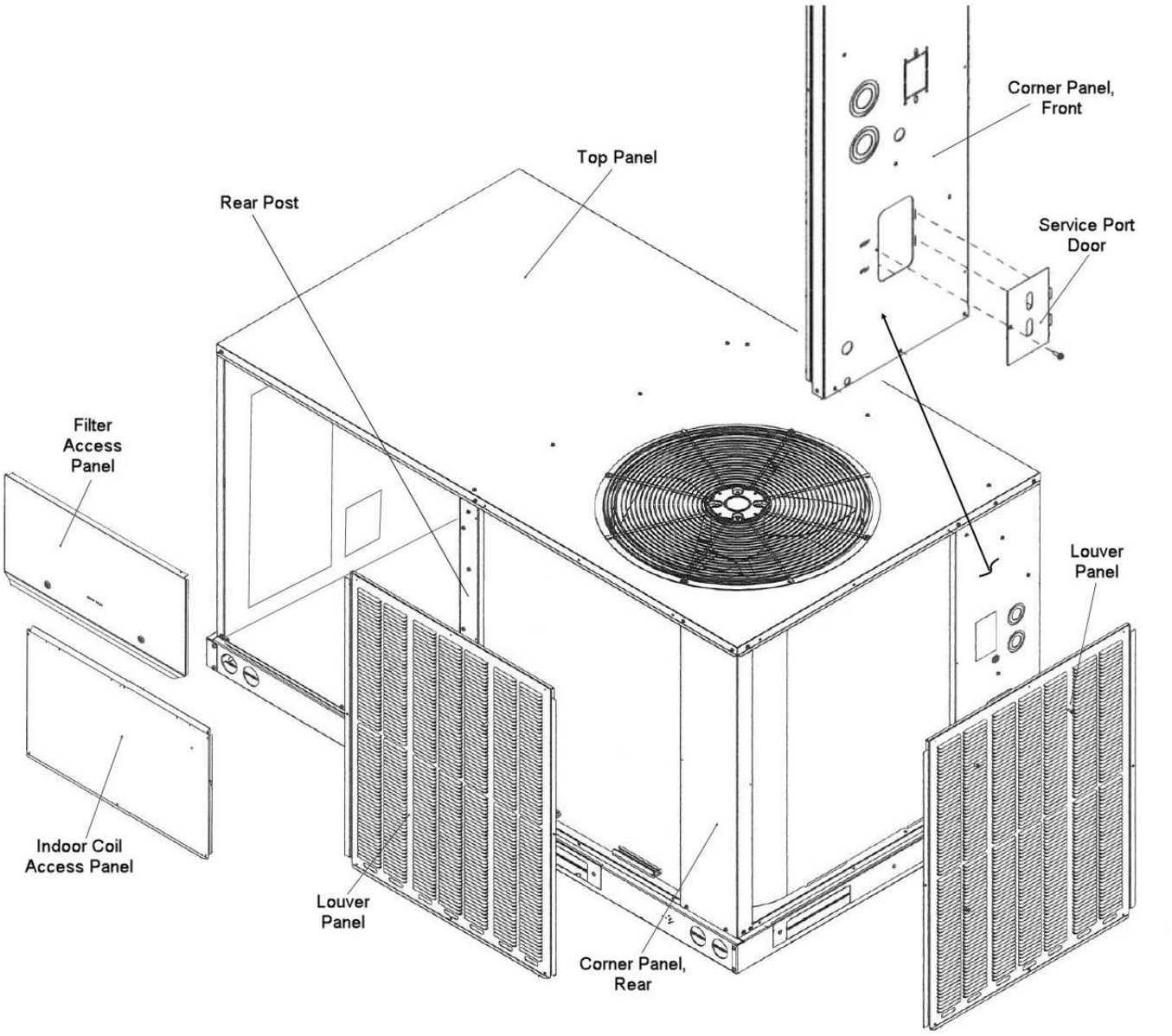

RHPCYB parts breakdown: ADS-105132-01C 8 Top Panel 2C Grille

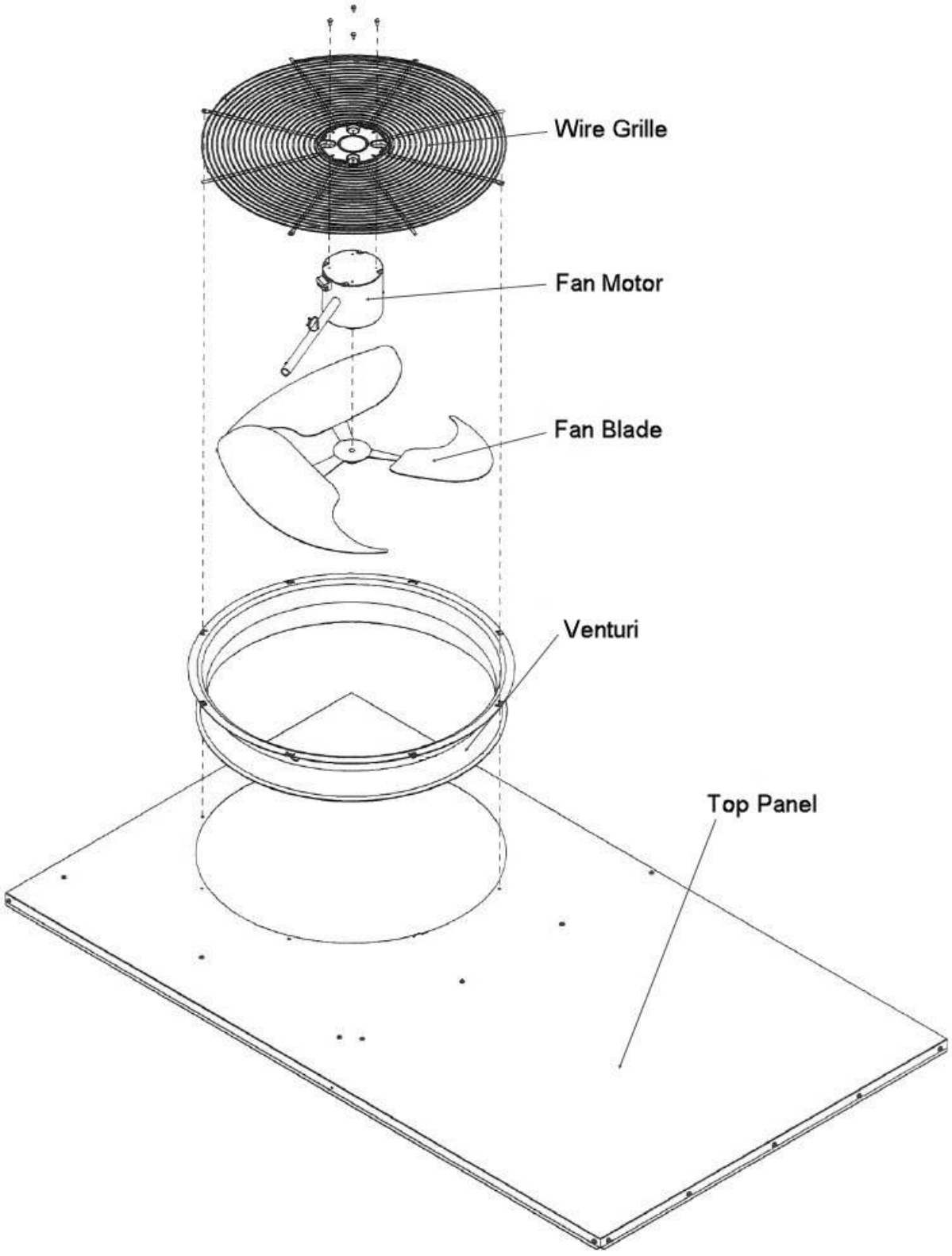

RHPCYB parts breakdown: ADS-105132-01C 9 Cabinet Assy Hinged Rear 2C Left

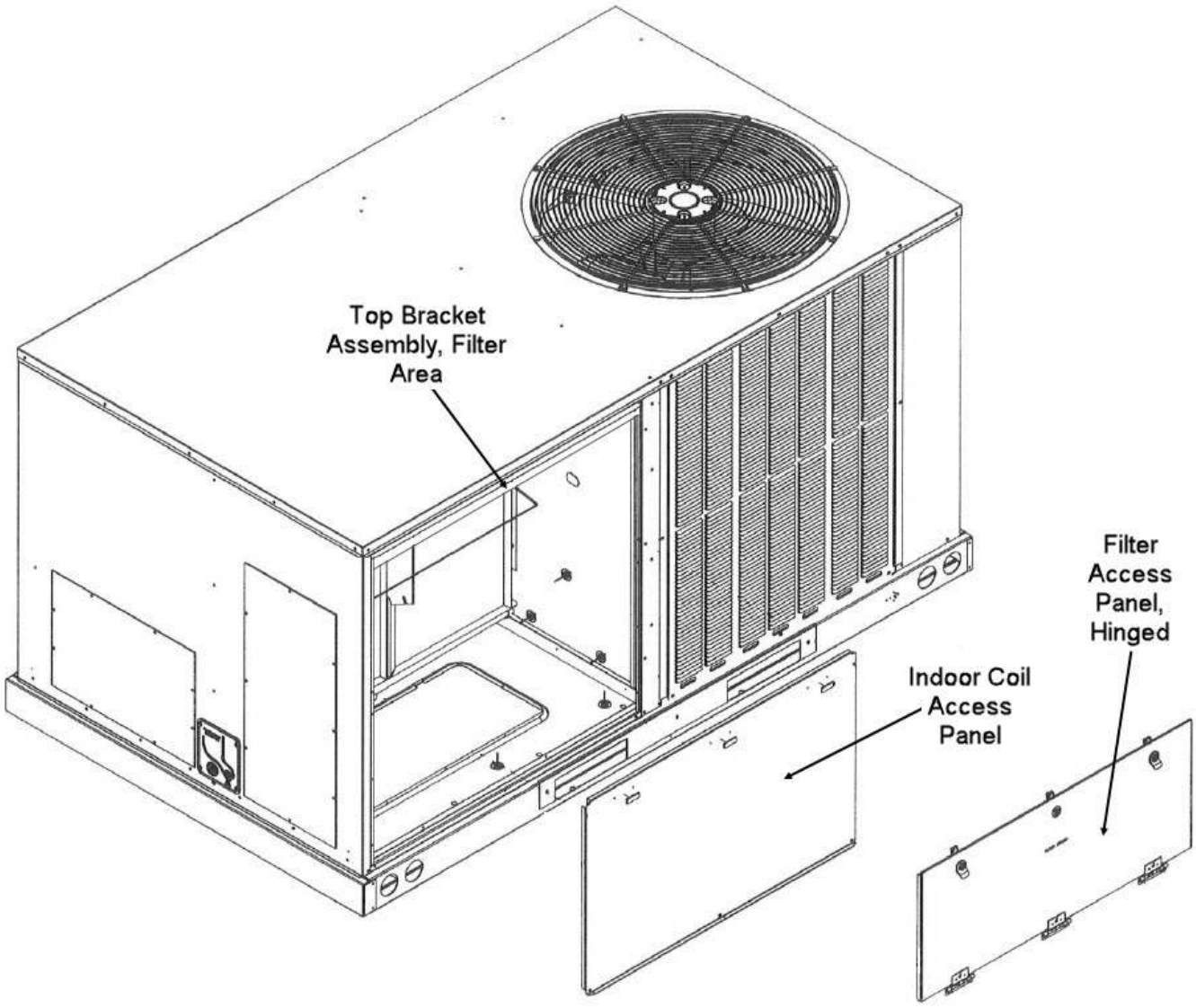

Compressor

Part No.	Description	Qty	Replaced By	Fits Models
AE-106636-01HT	Access Panel - Compressor	1/2/3		All models
42-101504-03	Comfort Alert Module - Three Phase (1-Stage or 2-Stage Compressor)	1		RHPCYB072ACT1, RHPCYB072ACT2, RHPCYB072ACU0, RHPCYB072ACU2
55-102045-268	Compressor	1		RHPCYB036ACT000AAAA0
55-102045-271	Compressor	1		RHPCYB048ACT000AAAA0, RHPCYB048ACU000AAAA0
55-102045-272	Compressor	1		RHPCYB048ADT000AAAA0
55-102045-274	Compressor	1		RHPCYB060ACT000AAAA0
55-102045-275	Compressor	1		RHPCYB060ADT000AAAA0
55-109517-18	Compressor	1/3		RHPCYB072ACT000AAAA0, RHPCYB072ACU000AAAA0
55-109517-19	Compressor	1		RHPCYB072ADT000AAAA0
55-109517-20	Compressor	1		RHPCYB072AYT0, RHPCYB072AYU0
63-20072-03	Compressor Mounting Screw (1-1/2 in. long)	1/4/10		All models
45-100834-80	Copeland Molded Plug Wiring Harness	1/2		All models
AS-106699-01HT	Hinged Panel Compressor Access	2		RHPCYB072ACT0, RHPCYB072ACT1, RHPCYB072ACT2, RHPCYB072ACU0, RHPCYB072ACU1, RHPCYB072ACU2, RHPCYB072ADT0, RHPCYB072ADU0
56-18518-06	Mounting Grommet - Compressor	1/4/10		All models
AE-106050-01	Mounting Plate - Compressor	1/2/3		All models

Motors & fans

Part No.	Description	Qty	Replaced By	Fits Models
70-106697-01	Blower Housing Assembly	1		RHPCYB036ACT000AAAA0, RHPCYB048ACT000AAAA0, RHPCYB048ACU000AAAA0, RHPCYB048ADT000AAAA0, RHPCYB060ACT000AAAA0, RHPCYB060ADT000AAAA0
70-106697-02	Blower Housing Assembly	1/2		RHPCYB072ACT000AAAA0, RHPCYB072ACU000AAAA0, RHPCYB072ADT000AAAA0
51-106100-05	Condenser Motor - 1/2 hp 208-230/1/50-60 (1075 rpm/1 speed)	1		RHPCYB048ACT000AAAA0, RHPCYB048ACU000AAAA0
51-107907-01	Condenser Motor - 1/2 hp 240/1/50-60 (875 rpm/1 speed)	1		RHPCYB060ACT000AAAA0
51-106100-04	Condenser Motor - 1/2 hp 460/1/50-60 (1075 rpm/1 speed)	1		RHPCYB048ADT000AAAA0
51-42534-43	Condenser Motor - 1/2 hp 575/1/60 (1075 rpm/1 speed)	1		RHPCYB072AYT0, RHPCYB072AYU0
51-106100-01	Condenser Motor - 1/5 hp 208-230/1/50-60 (825 rpm/1 speed)	1		RHPCYB036ACT000AAAA0
70-109585-01	Fan Blade -26 in.	1/2/3		All models
51-108049-00	Motor - Broad Ocean (230V - 1.2 hp) - BLANK	1/2		RHPCYB072ACT000AAAA0, RHPCYB072ACU000AAAA0
51-108050-00	Motor - Broad Ocean (460V - 1.2 hp) - BLANK	1		RHPCYB072ADT000AAAA0
51-108049-02	Motor - Broad Ocean 1.2 hp 230V	1/2		RHPCYB072ACT000AAAA0
51-108049-04	Motor - Broad Ocean 1.2 hp 230V	1/2		RHPCYB072ACU000AAAA0
51-108050-02	Motor - Broad Ocean 1.2 hp 460V	1		RHPCYB072ADT000AAAA0
51-108050-04	Motor - Broad Ocean 1.2 hp 460V	1		RHPCYB072ADU0
51-109525-29	Motor - SelecTech (460V - 1 hp)	1		RHPCYB060ADT000AAAA0
51-109525-47	Motor - SelecTech (460V - 1 hp)	1		RHPCYB048ADT000AAAA0
51-109525-00	Motor - SelecTech (460V - 1 hp) - BLANK	1		RHPCYB060ADT000AAAA0
51-109524-00	Motor - SelecTech (460V - 3/4 hp) - BLANK	1		RHPCYB048ADT000AAAA0
51-106547-26	Motor - SelecTech Gen 3 (230V - 1 hp)	1		RHPCYB060ACT000AAAA0
51-106547-00	Motor - SelecTech Gen 3 (230V - 1 hp) - BLANK	1		RHPCYB060ACT000AAAA0

Part No.	Description	Qty	Replaced By	Fits Models
51-107105-25	Motor - SelecTech Gen 3 (230V - 1-1/2 hp)	1		RHPCYB048ACU000AAAA0
51-107105-00	Motor - SelecTech Gen 3 (230V - 1-1/2 hp) - BLANK	1		RHPCYB048ACU000AAAA0
51-106546-57	Motor - SelecTech Gen 3 (230V - 3/4 hp)	1		RHPCYB036ACT000AAAA0
51-106546-58	Motor - SelecTech Gen 3 (230V - 3/4 hp)	1		RHPCYB048ACT000AAAA0
51-106546-00	Motor - SelecTech Gen 3 (230V - 3/4 hp) - BLANK	1		RHPCYB036ACT000AAAA0, RHPCYB048ACT000AAAA0
70-19929-10	Motor Mount Arm w/Grommet	1/2/3/4/5/6		All models
70-19927-04	Motor Mount Band	1		RHPCYB036ACT000AAAA0, RHPCYB048ACT000AAAA0, RHPCYB048ACU000AAAA0, RHPCYB048ADT000AAAA0, RHPCYB060ACT000AAAA0, RHPCYB060ADT000AAAA0
70-19927-05	Motor Mount Band	1/2		RHPCYB072ACT000AAAA0, RHPCYB072ACU000AAAA0, RHPCYB072ADT000AAAA0
51-100998-50	Regal Eon-K 460V 5SGH39FST1039	1		RHPCYB060ADT000AAAA0

Electrical

Part No.	Description	Qty	Replaced By	Fits Models
47-102709-11	Ambient Sensor	1/2		All models
43-25134-22	Capacitor - 10/440 Single Oval	1		RHPCYB036ACT000AAAA0, RHPCYB048ADT000AAAA0
43-25134-33	Capacitor - 7.5/440 Single Oval	1		RHPCYB072AYT0, RHPCYB072AYU0
45-18005-02	Connector	2		RHPCYB072ACT1, RHPCYB072ACT2, RHPCYB072ACU0, RHPCYB072ACU1, RHPCYB072ACU2, RHPCYB072ADT0
42-109499-08K	Contactor 32A XMC0-323 3P 3PH A2L	1/2		All models
47-109707-01	Control Board - Economizer	1		RHPCYB072ACU0, RHPCYB072ACU2
45-101723-08	Copeland Molded Plug - Low Voltage (Two-Stage Solenoid)	1/2		RHPCYB072ACT000AAAA0, RHPCYB072ACU000AAAA0, RHPCYB072ADT000AAAA0
45-61997-55	Economizer Wire Harness Jumper Plug	1/2		All models
44-ATC3-5PK	Fuse - 3A Blade Type - Automotive (5 Pack)	1		RHPCYB036ACT000AAAA0, RHPCYB048ACT000AAAA0, RHPCYB048ACU000AAAA0, RHPCYB048ADT000AAAA0, RHPCYB060ACT000AAAA0, RHPCYB060ADT000AAAA0
45-19000-01	Ground Lug	1/2		All models
47-102884-05	Integrated Control	1/2		All models
45-41952-02	Outlet Box	2		RHPCYB072ACT1, RHPCYB072ACT2, RHPCYB072ACU0, RHPCYB072ACU1, RHPCYB072ACU2, RHPCYB072ADT0
45-107000-09	Plug Housing Assembly	1		RHPCYB072ACT0, RHPCYB072ACT1, RHPCYB072ACU0, RHPCYB072ACU2, RHPCYB072ADT0, RHPCYB072ADU0
45-21684-02	Quick Connect Terminal	1/2		RHPCYB036ACT000AAAA0, RHPCYB048ACT000AAAA0, RHPCYB048ACU000AAAA0, RHPCYB060ACT000AAAA0, RHPCYB072ACT000AAAA0, RHPCYB072ACU000AAAA0
45-41953-04	Receptacle Cover	2		RHPCYB072ACT1, RHPCYB072ACT2, RHPCYB072ACU0, RHPCYB072ACU1, RHPCYB072ACU2, RHPCYB072ADT0
45-41954-01	Receptacle/Ground Fault	2		RHPCYB072ACT1, RHPCYB072ACT2, RHPCYB072ACU0, RHPCYB072ACU1, RHPCYB072ACU2, RHPCYB072ADT0
42-25106-01	Relay - DPDT (24VAC coil)	1/2		All models
42-102234-01	Relay - SPDT (24VAC coil)	1		RHPCYB072ACT1, RHPCYB072ACT2, RHPCYB072ACU0, RHPCYB072ACU2

Part No.	Description	Qty	Replaced By	Fits Models
47-102883-04	Rooftop Unit Controller	1		RHPCYB072ACT0, RHPCYB072ACT1, RHPCYB072ACU0, RHPCYB072ACU2, RHPCYB072ADT0, RHPCYB072ADU0
47-109977-01	Sensor A2L (24V Relay)	1/2/3		All models
42-106941-02	Smoke Detector Wired Return/Supply	1		RHPCYB072ACT1, RHPCYB072ACU0, RHPCYB072ACU1, RHPCYB072ADT0
42-106941-03	Smoke Detector Wired Supply	1		RHPCYB072ACT1, RHPCYB072ACU0, RHPCYB072ACU1, RHPCYB072ADT0
47-102710-33	Temperature Sensor	1/2		All models
47-102710-34	Temperature Sensor	1/2		All models
46-103324-04	Transformer	1		RHPCYB036ACT000AAAA0, RHPCYB048ACT000AAAA0, RHPCYB048ACU000AAAA0, RHPCYB060ACT000AAAA0
46-103395-05	Transformer	1		RHPCYB048ADT000AAAA0, RHPCYB060ADT000AAAA0
46-42515-11	Transformer	1/2		RHPCYB072ACT000AAAA0, RHPCYB072ACU000AAAA0
46-42515-12	Transformer	1		RHPCYB072ADT000AAAA0
45-106065-05	Wire Harness	1		RHPCYB036ACT000AAAA0, RHPCYB048ACT000AAAA0, RHPCYB048ACU000AAAA0, RHPCYB048ADT000AAAA0
45-107154-01	Wire Harness	1/4		All models
45-42522-130	Wire Harness - Comfort Alert Bypass	1/2		All models
45-102706-31	Wire Harness - Economizer	1/2		All models
45-106065-03	Wire Harness - Outdoor Fan	1		RHPCYB036ACT000AAAA0, RHPCYB048ACT000AAAA0, RHPCYB048ACU000AAAA0, RHPCYB048ADT000AAAA0
45-42522-141	Wire Harness - Second Stage Bypass	1/2		All models
45-42522-134	Wire Harness Assembly - Comfort Alert Option	1		RHPCYB072ACT1, RHPCYB072ACT2
45-105282-02	Wiring Harness	1/2		All models
45-105282-07	Wiring Harness	1		RHPCYB072AYT0, RHPCYB072AYU0
45-107000-01	Wiring Harness	1		RHPCYB036ACT000AAAA0, RHPCYB048ACT000AAAA0, RHPCYB048ACU000AAAA0, RHPCYB048ADT000AAAA0, RHPCYB060ACT000AAAA0, RHPCYB060ADT000AAAA0
45-107000-07	Wiring Harness	1/2		RHPCYB072ACT000AAAA0, RHPCYB072ACU000AAAA0, RHPCYB072ADT000AAAA0
45-109867-01	Wiring Harness	1		RHPCYB072ACT0, RHPCYB072ACT1, RHPCYB072ACU0, RHPCYB072ACU2, RHPCYB072ADT0, RHPCYB072ADU0
45-109867-02	Wiring Harness	1/2		All models
45-24258-34	Wiring Harness	1/2		RHPCYB060ACT000AAAA0, RHPCYB060ADT000AAAA0, RHPCYB072ACT000AAAA0, RHPCYB072ACU000AAAA0, RHPCYB072ADT000AAAA0
45-24258-36	Wiring Harness	1		RHPCYB072AYT0, RHPCYB072AYU0
45-42522-147	Wiring Harness	1		RHPCYB072ACT0, RHPCYB072ACT1, RHPCYB072ACU0, RHPCYB072ACU2, RHPCYB072ADT0, RHPCYB072ADU0
45-42522-165	Wiring Harness	1		RHPCYB072ACT0, RHPCYB072ACT1, RHPCYB072ACU0, RHPCYB072ACU2, RHPCYB072ADT0, RHPCYB072ADU0
45-42522-166	Wiring Harness	1		RHPCYB072ACT0, RHPCYB072ACT1, RHPCYB072ACU0, RHPCYB072ACU2, RHPCYB072ADT0, RHPCYB072ADU0
45-42522-168	Wiring Harness	1/2		All models

Part No.	Description	Qty	Replaced By	Fits Models
45-42522-170	Wiring Harness	1		RHPCYB072ACT0, RHPCYB072ACT1, RHPCYB072ACU0, RHPCYB072ACU2, RHPCYB072ADT0, RHPCYB072ADU0
45-42522-176	Wiring Harness	1		RHPCYB072ACT0, RHPCYB072ACT1, RHPCYB072ACU0, RHPCYB072ACU2, RHPCYB072ADT0, RHPCYB072ADU0
45-42522-177	Wiring Harness	1		RHPCYB072ACT0, RHPCYB072ACT1, RHPCYB072ACU0, RHPCYB072ACU2, RHPCYB072ADT0, RHPCYB072ADU0
45-42522-246	Wiring Harness - Broad Ocean Diode Harness	1/2		RHPCYB072ACT000AAAA0, RHPCYB072ACU000AAAA0
45-42522-245	Wiring Harness - Comfort Alert Bypass with L Input	1/2		All models
AS-42522-151	Wiring Harness - Freeze Stat Jumper	1/2		All models
61-26149-06	Wiring Harness - Reversing Valve	1/2		All models
45-42522-249	Wiring Harness Assembly - Electric Heat	1/2		All models
RXRX-UVCTCC	Y Volt C CAB Transformer 575V	1		RHPCYB072AYT0, RHPCYB072AYU0

Valves & switches

Part No.	Description	Qty	Replaced By	Fits Models
47-103669-06	High Pressure Control Assembly	1/3		All models
47-23683-09	Limit Switch/Defrost Sensor - Auto Reset (Tube Mount)	1		RHPCYB072ACT2, RHPCYB072ACU2
47-107501-01	Low Ambient Control	1		RHPCYB072ACT1, RHPCYB072ACT2, RHPCYB072ACU0, RHPCYB072ACU2
42-105601-33	Pressure Switch	1/4		All models
42-105601-34	Pressure Switch	1		RHPCYB072ACT0, RHPCYB072ACT1, RHPCYB072ACU0, RHPCYB072ACU2, RHPCYB072ADT0, RHPCYB072ADU0
61-102498-03	Reversing Valve	1/3		RHPCYB072ACT000AAAA0, RHPCYB072ACU000AAAA0, RHPCYB072ADT000AAAA0
61-102498-12	Reversing Valve	1		RHPCYB036ACT000AAAA0, RHPCYB048ACT000AAAA0, RHPCYB048ACU000AAAA0, RHPCYB048ADT000AAAA0, RHPCYB060ACT000AAAA0, RHPCYB060ADT000AAAA0
83-CD3608-6PK	Service Valve - Copper Tube (Premium)	1/3		All models
61-18551-01	Valve Core	1/3		All models

Coil & refrigeration

Part No.	Description	Qty	Replaced By	Fits Models
83-107162-11	Charge Compensator	1		RHPCYB048ACT000AAAA0, RHPCYB048ACU000AAAA0, RHPCYB048ADT000AAAA0
83-107162-13	Charge Compensator	1/3		RHPCYB060ACT000AAAA0, RHPCYB060ADT000AAAA0, RHPCYB072ACT000AAAA0, RHPCYB072ACU000AAAA0, RHPCYB072ADT000AAAA0
AS-107174-01	Condenser Coil	1		RHPCYB036ACT000AAAA0
AS-107176-01	Condenser Coil	1/3		RHPCYB048ACT000AAAA0, RHPCYB048ACU000AAAA0, RHPCYB048ADT000AAAA0, RHPCYB060ACT000AAAA0, RHPCYB060ADT000AAAA0, RHPCYB072ACT000AAAA0, RHPCYB072ACU000AAAA0, RHPCYB072ADT000AAAA0
AS-107176-02	Condenser Coil	1		RHPCYB072ADU0
61-106118-01	CoreMax Valve Core	1/2/5		All models
61-109438-12	Expansion Valve (TXV) Sporlan HX Series (HXCES2KX)	1		RHPCYB036ACT000AAAA0

Part No.	Description	Qty	Replaced By	Fits Models
61-109438-13	Expansion Valve (TXV) Sporlan HX Series (HXCES2ZX)	1		RHPCYB036ACT000AAAA0
61-109438-14	Expansion Valve (TXV) Sporlan HX Series (HXCES3KX)	1		RHPCYB048ACT000AAAA0, RHPCYB048ACU000AAAA0, RHPCYB048ADT000AAAA0
61-109438-15	Expansion Valve (TXV) Sporlan HX Series (HXCES3ZX)	1		RHPCYB048ACT000AAAA0, RHPCYB048ACU000AAAA0, RHPCYB048ADT000AAAA0
61-109438-19	Expansion Valve (TXV) Sporlan HX Series (HXCES5ZX)	1/3		RHPCYB072ACT000AAAA0, RHPCYB072ACU000AAAA0, RHPCYB072ADT000AAAA0
83-BFK-164S	Liquid Line Filter Drier (Bi-directional)	1/3		All models
AS-107173-01	Micro Channel Evaporator Coil Assembly	1		RHPCYB036ACT000AAAA0
AS-107420-01	Micro Channel Evaporator Coil Assembly	1		RHPCYB048ACT000AAAA0, RHPCYB048ACU000AAAA0, RHPCYB048ADT000AAAA0, RHPCYB060ACT000AAAA0, RHPCYB060ADT000AAAA0
AS-109871-01	Micro Channel Evaporator Coil Assembly - 32MM Sanhua	1/3/4		RHPCYB072ACT000AAAA0, RHPCYB072ACU000AAAA0, RHPCYB072ADT000AAAA0
83-26020-09	Strainer	1/3		All models
61-109438-16	Thermostatic Expansion Valve (TXV) - Indoor (Cooling)	1/3		RHPCYB060ACT000AAAA0, RHPCYB060ADT000AAAA0, RHPCYB072ACT000AAAA0, RHPCYB072ACU000AAAA0, RHPCYB072ADT000AAAA0
61-109438-17	Thermostatic Expansion Valve (TXV) - Outdoor (Heating)	1		RHPCYB060ACT000AAAA0, RHPCYB060ADT000AAAA0
82-103230-03	Tube - 1/4 O.D. Pressure Switch	1		RHPCYB072ACT0, RHPCYB072ACT1, RHPCYB072ACU0, RHPCYB072ACU2, RHPCYB072ADT0, RHPCYB072ADU0
64-21106-02	TXV Bulb Strap Mounting Kit	1/2/5		All models
61-106117-01	Valve Body (CoreMax)	1/2/5		All models

Cabinet & hardware

Part No.	Description	Qty	Replaced By	Fits Models
AE-106637-01HT	Access Panel - Blower	1/3		All models
AE-106635-01HT	Access Panel - Control Box	1/3		All models
AE-106641-01HT	Access Panel - Filter	1/3		All models
AE-106639-01HT	Access Panel - Heat Exchanger	1/4		All models
AE-106644-01HT	Access Panel - Indoor Coil	1/4		All models
83-100635-01	Access Valve Cap	1/2/4/5		All models
83-100635-05	Access Valve Cap	1/2/4/5		All models
AE-106601-06	Base Rail - Back	1/2/3		All models
AE-106601-05	Base Rail - Front	1/2/3		All models
AE-106601-07	Base Rail - Left	1/2/3		All models
AE-106601-04	Base Rail - Right	1/2/3		All models
AE-106602-01	Basepan - Outdoor	1/2/3		All models
AE-106608-01	Blower Deck	1/2/3		All models
AE-106609-01	Blower Deck Lower Air Stop	1/2/3		All models
AE-106610-01	Blower Support Wrap	1/2/3		All models
63-19919-01	Bolt, 1/4-20 x 1-1/2 in.	1/2		All models
68-104248-04	Bottom Coil Pad	1/4/10		RHPCYB048ACT000AAAA0, RHPCYB048ACU000AAAA0, RHPCYB048ADT000AAAA0, RHPCYB060ACT000AAAA0, RHPCYB060ADT000AAAA0, RHPCYB072ACT000AAAA0, RHPCYB072ACU000AAAA0, RHPCYB072ADT000AAAA0

Part No.	Description	Qty	Replaced By	Fits Models
68-104248-07	Bottom Coil Pad	4		RHPCYB036ACT000AAAA0
68-106063-02	Bottom Drain Center	1/2/3		All models
AE-102859-21	Bracket - Air Sensor	1/2/3		All models
AE-106026-07	Bracket - Clogged Drain Sensor	1/4		All models
AE-109842-01	Bracket - DDC Economizer Kit	1		RHPCYB072ACU0, RHPCYB072ACU2
45-18232-02	Button Plug - Metal (Snap-In)	1/2/3		All models
45-42558-01	Button Plug with Recessed Head	1/4		All models
64-101148-06	Cable Tie - Double Loop, 7.6"	1/2/3/4/5		All models
AE-50892-81	Capacitor Strap	1		RHPCYB036ACT000AAAA0, RHPCYB048ACT000AAAA0, RHPCYB048ACU000AAAA0, RHPCYB048ADT000AAAA0
63-109233-01	Clip Assembly	1/4		All models
AS-106025-05	Clogged Drain Sensor Assembly	1/2/3		All models
AE-106621-01	Component Mounting Panel	1/2		All models
AE-106620-01	Control Box Back	1/2/3		All models
AE-106617-01HT	Corner Panel - Front	1/2/3		All models
AE-106633-01HT	Cover Return	1/4		All models
AS-106173-02	Drain Pan Assembly w/ Insulation	1/2/3		All models
AE-107490-01	ECM Motor Remote Bracket	1/2		RHPCYB060ACT000AAAA0, RHPCYB060ADT000AAAA0, RHPCYB072ACT000AAAA0, RHPCYB072ACU000AAAA0, RHPCYB072ADT000AAAA0
AS-106660-01	Electric Heat Bulkhead Plate Assembly	1/2		All models
AE-106613-01	Evaporator Mount Bulkhead	1/2/3		All models
AE-106614-01	Evaporator Mount Return Supply Panel	1/2/3		All models
54-17531-24	Filter - Disposable Fiberglass	4/7/9		All models
AS-106643-01HT	Filter Access Assembly	1/3		All models
AS-106698-02HT	Filter Access Panel - Latch Assembly	2		RHPCYB072ACT0, RHPCYB072ACT1, RHPCYB072ACT2, RHPCYB072ACU0, RHPCYB072ACU1, RHPCYB072ACU2, RHPCYB072ADT0, RHPCYB072ADU0
AE-102132-01	Filter Drier Strap	1/3		All models
AE-106673-01	Filter Rack Bottom Slide	1/2/3		All models
AE-106674-01	Filter Rack Mid Bar	1/2/3		All models
AE-106675-01	Filter Rack Side	2/4/5		All models
45-106030-02	Filter Retainer Rod	2/4/5		All models
AE-106676-01	Filter Top Rack	1/2/3		All models
45-107198-01	Flush Mount Button Plug	1/2/3		All models
68-106131-01	Foam Filler - Adhesive Backed	1/2/3		All models
68-22079-84	Gasket - Neoprene (1/8 in. x 1/2 in.) - 100 ft. Roll	1/2/3/4/5/6/7/11/12/13/14/19/23/24/67/103/139		All models
AS-106693-01HT	Gasket Assembly Control Access	1/3		All models
AS-106654-02HT	Gasket Assembly Top Bracket Blower Area	2		RHPCYB072ACT0, RHPCYB072ACT1, RHPCYB072ACT2, RHPCYB072ACU0, RHPCYB072ACU1, RHPCYB072ACU2, RHPCYB072ADT0, RHPCYB072ADU0
AS-106654-01HT	Gasket Assembly Top Bracket Control Area	2		RHPCYB072ACT0, RHPCYB072ACT1, RHPCYB072ACT2, RHPCYB072ACU0, RHPCYB072ACU1, RHPCYB072ACU2, RHPCYB072ADT0, RHPCYB072ADU0

Part No.	Description	Qty	Replaced By	Fits Models
AS-106654-03HT	Gasket Assembly, Top Bracket Filter Area	2		RHPCYB072ACT0, RHPCYB072ACT1, RHPCYB072ACT2, RHPCYB072ACU0, RHPCYB072ACU1, RHPCYB072ACU2, RHPCYB072ADT0, RHPCYB072ADU0
AS-106654-06HT	Gasket/Insulation Assembly Blower Access Filler	2		RHPCYB072ACT0, RHPCYB072ACT1, RHPCYB072ACT2, RHPCYB072ACU0, RHPCYB072ACU1, RHPCYB072ACU2, RHPCYB072ADT0, RHPCYB072ADU0
56-22521-03	Grommet - Drain Tubing	1/3		All models
56-106052-01	Grommet - Tubing	1/2/3		All models
63-106119-01	Hex Nut Brass	1/2/5		All models
63-17189-03	Hex Nut, 1/4-20, w/External Tooth Lock Washer	1/2		All models
AS-106699-02HT	Hinged Panel Blower Access	2		RHPCYB072ACT0, RHPCYB072ACT1, RHPCYB072ACT2, RHPCYB072ACU0, RHPCYB072ACU1, RHPCYB072ACU2, RHPCYB072ADT0, RHPCYB072ADU0
AS-106699-03HT	Hinged Panel Filter Access	2		RHPCYB072ACT0, RHPCYB072ACT1, RHPCYB072ACT2, RHPCYB072ACU0, RHPCYB072ACU1, RHPCYB072ACU2, RHPCYB072ADT0, RHPCYB072ADU0
AS-106645-01HT	Indoor Coil Access Assembly w/ Insulation	1/2/3		All models
68-20185-01	Insulation	1/3		All models
68-106028-20	Insulation - Blower Deck Air Stop	1/2/3		All models
68-109652-01	Insulation - Bulkhead	1/4		All models
AS-109653-01	Insulation Assembly - Bulkhead	1/2/3		All models
AS-106638-01HT	Insulation Assembly - Blower Access Panel	1/3		All models
AS-106642-01HT	Insulation Assembly - Filter Access	1/3		All models
AS-106640-01HT	Insulation Assembly - Heating Access	1/2/3		All models
AS-106616-01HT	Insulation Assembly - Post Front	1/2/3		All models
AS-106604-01	Insulation Assembly Base Pan - Indoor	1/2/3		All models
64-103465-03	Latch Assembly - Finger Pull	3		RHPCYB072ACT0, RHPCYB072ACT1, RHPCYB072ACT2, RHPCYB072ACU0, RHPCYB072ACU1, RHPCYB072ACU2, RHPCYB072ADT0, RHPCYB072ADU0
AS-106698-01HT	Latch Assembly Blower Access	2		RHPCYB072ACT0, RHPCYB072ACT1, RHPCYB072ACT2, RHPCYB072ACU0, RHPCYB072ACU1, RHPCYB072ACU2, RHPCYB072ADT0, RHPCYB072ADU0
AS-106698-03HT	Latch Assembly Control Access	2		RHPCYB072ACT0, RHPCYB072ACT1, RHPCYB072ACT2, RHPCYB072ACU0, RHPCYB072ACU1, RHPCYB072ACU2, RHPCYB072ADT0, RHPCYB072ADU0
64-103465-01	Latch Assembly-Filter Access	2/5		All models
64-25340-03	Locking Wing Push Mount Tie	1/2/3/4/10/11/12/17/18/23		All models
AS-106196-03HT	Louver Panel (For Option LV models) (2)	4		RHPCYB072ACT0, RHPCYB072ACT1, RHPCYB072ACT2, RHPCYB072ACU0, RHPCYB072ACU1, RHPCYB072ACU2, RHPCYB072ADT0, RHPCYB072ADT2, RHPCYB072ADU0
47-102876-04	Low Pressure Control Assembly	1/3		All models
AE-106666-02	Micro Channel Bracket 25mm Evaporator Tube End	1/4		All models
AE-106615-01HT	Panel - Post Front	1/4		All models
AE-109983-01HT	Panel - Top	1/4		All models
AE-106619-01HT	Post - Corner Panel, Rear	1/2/3		All models
AE-106618-01HT	Post - Rear	1/2/3		All models
AS-106634-01HT	Return Cover Panel Assembly w/ Insulation	1/2/3		All models

Part No.	Description	Qty	Replaced By	Fits Models
63-20072-05	Screw	1/2/3/4/5/6		All models
63-20189-06	Screw	1	OBSOLETE	RHPCYB072AYT0, RHPCYB072AYU0
63-22338-06	Screw	1/2/3		All models
AE-109647-01	Sensor Mounting Bracket	1/2/3		All models
AE-106060-01HT	Service Port Door	1/2/3		All models
AE-106040-01	Service Port Panel	1/2/3		All models
63-42112-03	Sheet Metal Screw w/Sealing Washer, 10-16 x 5/8 in.	81/126/170		All models
63-22338-11	Sheet Metal Screw, 10-16 x 3/8 in.	1		RHPCYB072ACU0, RHPCYB072ACU2
63-42109-03	Sheet Metal Screw, 10-16 x 5/8 in.	1/2/3/4/5/7/8/17/18/32/36/189/293/396		All models
63-22153-02	Sheet Metal Screw, 8-18 x 7/8 in.	1/4/6		All models
AE-106107-01	Shield - Low Voltage	1/2/3		All models
79-21491-83	Silicone Rubber Tubing (18 in. long)	1/4		All models
79-21491-03	Silicone Rubber Tubing (Bulk - Non-Salable)	1/5		All models
AE-106106-03	Smoke Detector Mounting Bracket	1		RHPCYB072ACT1, RHPCYB072ACU0, RHPCYB072ACU1, RHPCYB072ADT0
AE-106106-05	Smoke Detector Mounting Bracket Return	1		RHPCYB072ACT1, RHPCYB072ACU0, RHPCYB072ACU1, RHPCYB072ACU2, RHPCYB072ADT0, RHPCYB072ADT2
45-17057-02	Snap-In Bushing - Conductor Protection	1/2/5/6/9	OBSOLETE	All models
45-17057-13	Snap-In Bushing - Conductor Protection	1/2/3		All models
45-18515-01	Snap-In Bushing - Conductor Protection	1/2/3		All models
45-42519-01	Snap-In Bushing - Conductor Protection	1/3/5		All models
63-22429-01	Stainless Steel Sheet Metal Screw, 8-18 x 1/2 in.	1/2/3/5/6/8/9		All models
68-23618-81	Stripping - 40 ft. Roll	4/6/8		All models
AS-106632-01HT	Supply Cover Panel Assembly w/Insulation	1/2/3		All models
AE-106606-01HT	Supply/Return Panel	1/4		All models
AS-106607-01HT	Supply/Return Panel Assembly w/Insulation	1/2/3		All models
63-100404-06	Thread-Forming Screw (black), 10-32 x 7/16 in.	4/7/9		All models
63-22487-01	Thread-Forming Screw, 10-32 x 1/2 in.	1/2/3		All models
63-100404-03	Thread-Forming Screw, 12-24 x 3/4 in.	4/7/9		All models
AE-109012-03	Top Panel Brace Bracket	1/2/3		All models
AE-104798-01	Transformer Mount	1		RHPCYB072AYT0, RHPCYB072AYU0
AE-106050-02	Transformer Mounting Plate	1		RHPCYB072AYT0, RHPCYB072AYU0
64-18940-05	Tubing Clamp - 5/8 in.	1		RHPCYB072ACU1, RHPCYB072ACU2, RHPCYB072ADT0, RHPCYB072ADT2
68-104464-07	Venturi	1		RHPCYB036ACT000AAAA0, RHPCYB048ACT000AAAA0, RHPCYB048ACU000AAAA0, RHPCYB048ADT000AAAA0
68-104464-16	Venturi	1/2		RHPCYB060ACT000AAAA0, RHPCYB060ADT000AAAA0, RHPCYB072ACT000AAAA0, RHPCYB072ACU000AAAA0, RHPCYB072ADT000AAAA0
64-17606-06	Wire & Cable Tie - Nylon Black - 7-1/2 in.	1/2/4/5/12/19/26		All models

Part No.	Description	Qty	Replaced By	Fits Models
95-104620-04	Wire Grille	1/2/3		All models