Rheem RHPXY Package Unit Replacement Parts List

Parts list RP-RHM-RHPXY | Updated Nov 2026 | 143 parts | 8 model numbers

Genuine Rheem OEM part numbers for the models listed below, compiled from Rheem Manufacturing's service parts catalog. Quantities are per unit. Where Rheem has replaced a part number, the current number is shown under Replaced By. Always confirm the full model and serial number of the unit before ordering.

Models covered

RHPXYB036AJT000NA, RHPXYB042AJT000NA, RHPXYB048AJT000NA, RHPXYB060AJT000NA, RHPXYC024AJT000NA, RHPXYC036AJT000NA, RHPXYC048AJT000NA, RHPXYC060AJT000NA

RHPXY parts breakdown: ADS-105127-19X 10 Compressor Area

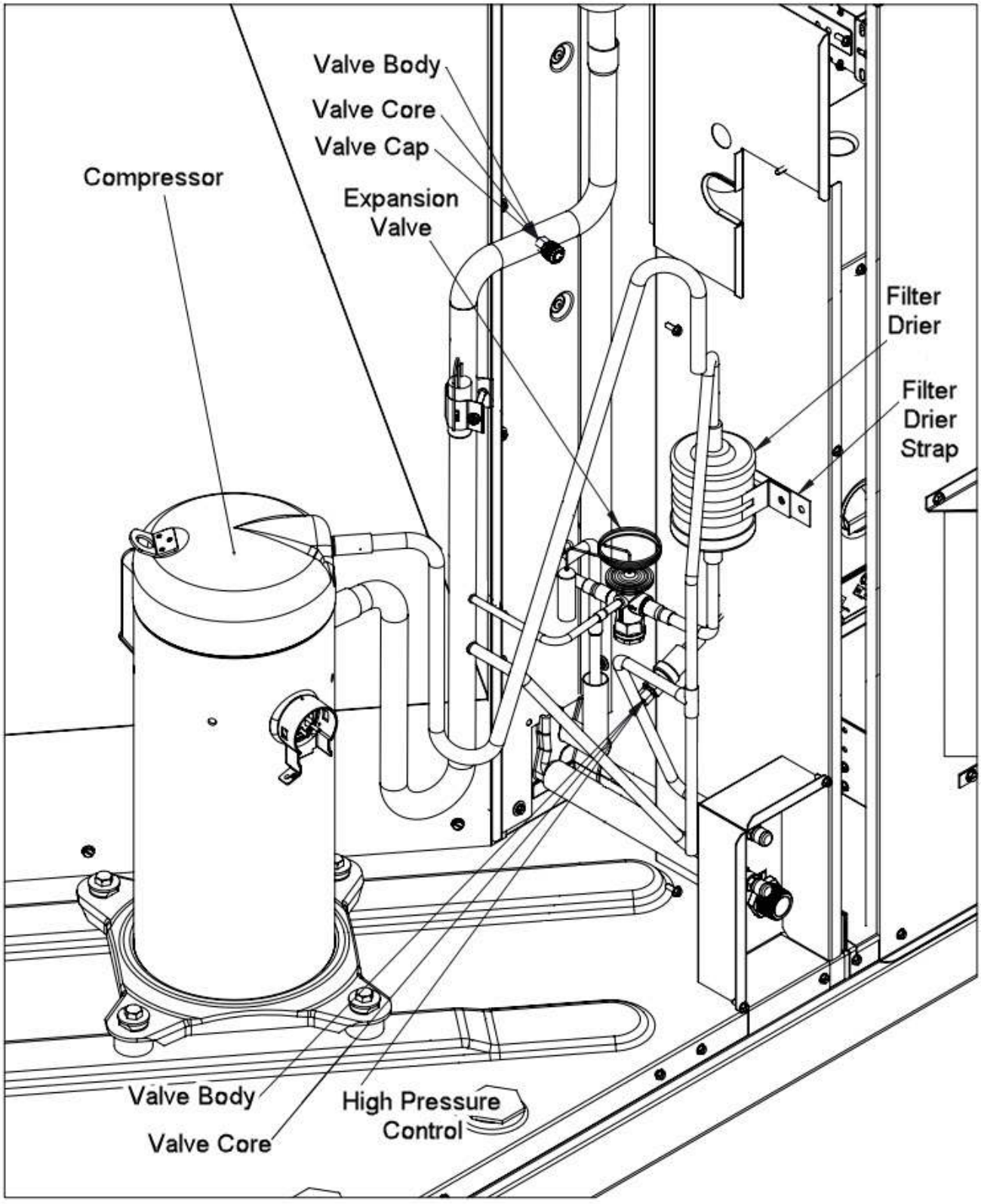

RHPXY parts breakdown: ADS-105127-19X 1 Exterior Cabinet

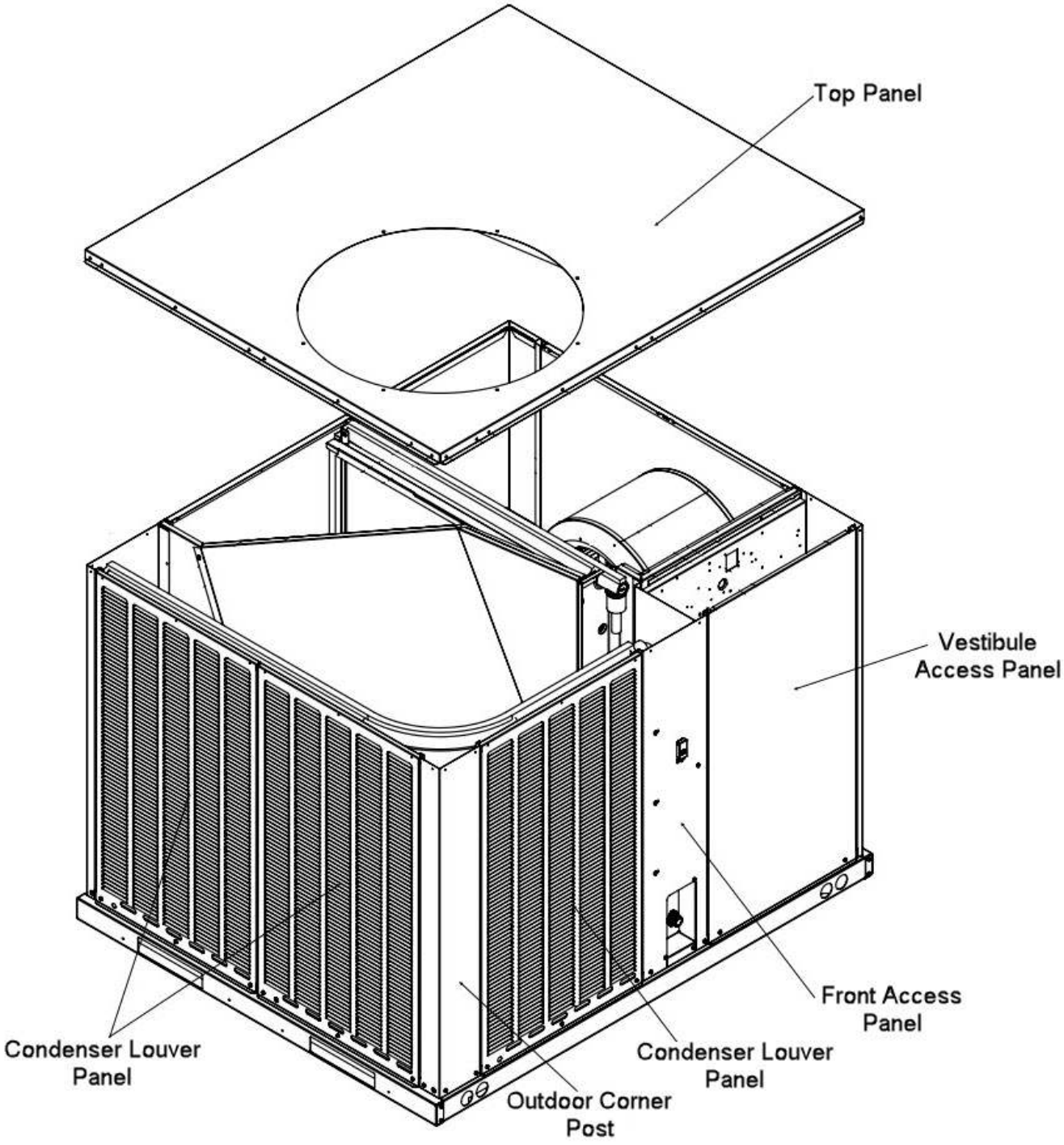

RHPXY parts breakdown: ADS-105127-19X 2 Exterior Cabinet

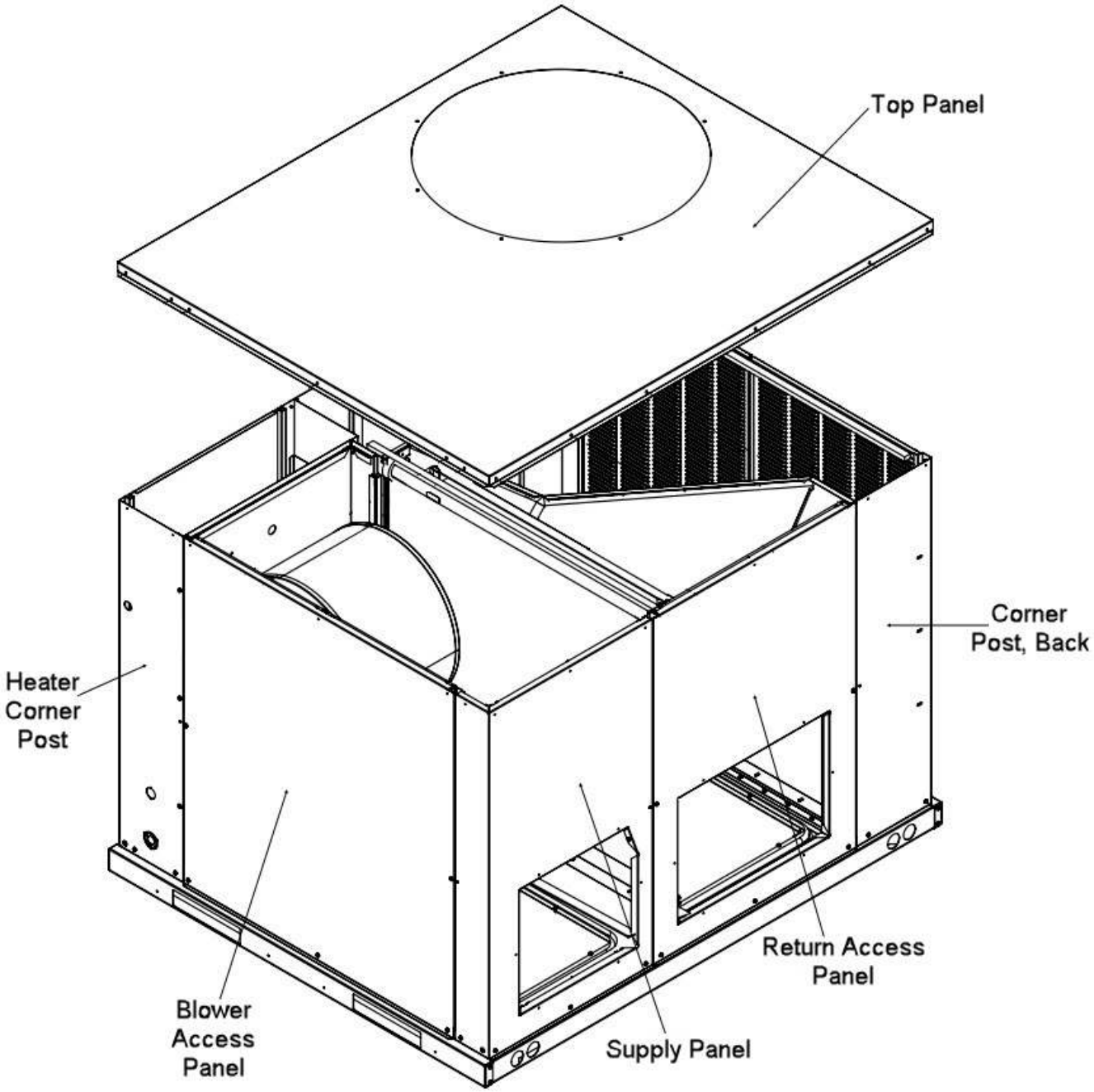

RHPXY parts breakdown: ADS-105127-19X 3 Base Rails and Base Pan

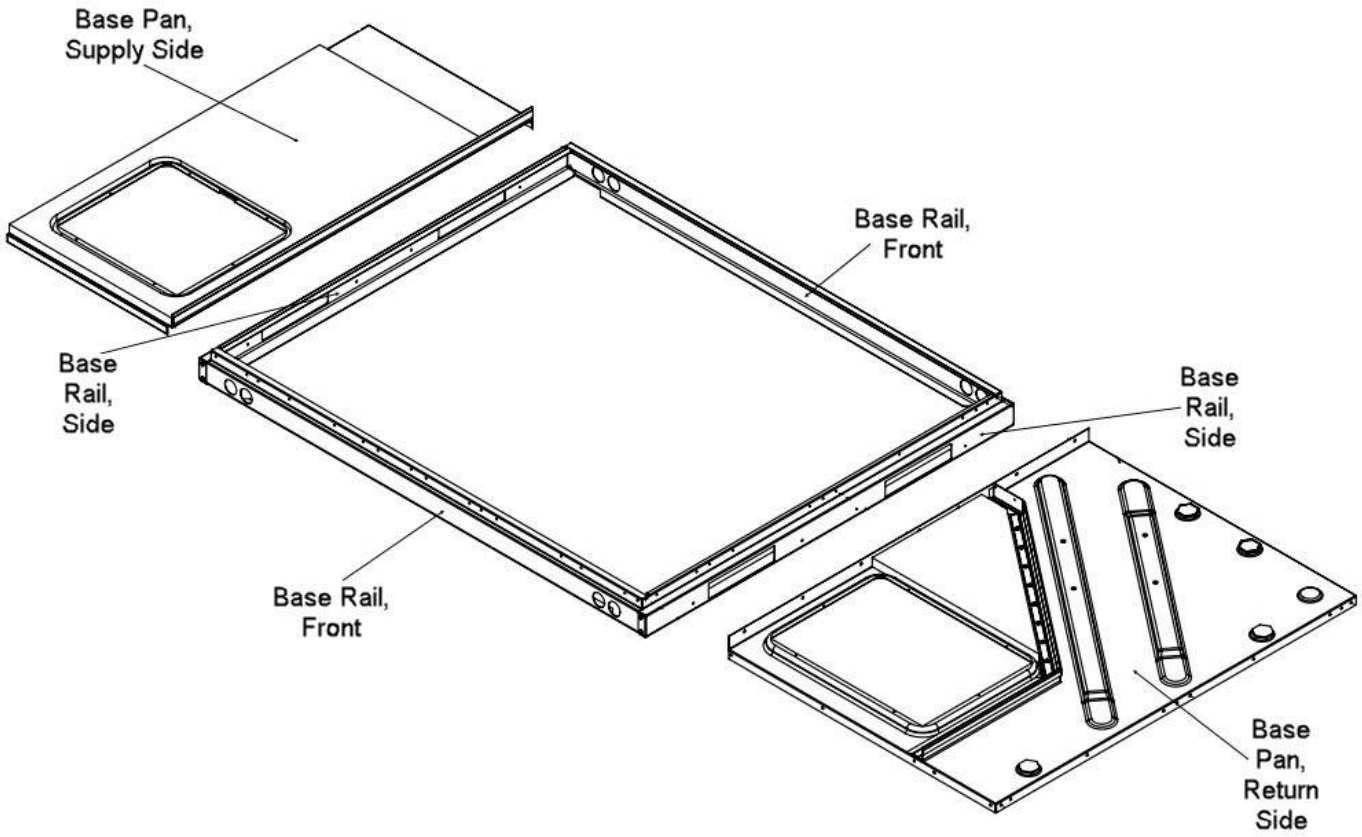

RHPXY parts breakdown: ADS-105127-19X 4 Internal View

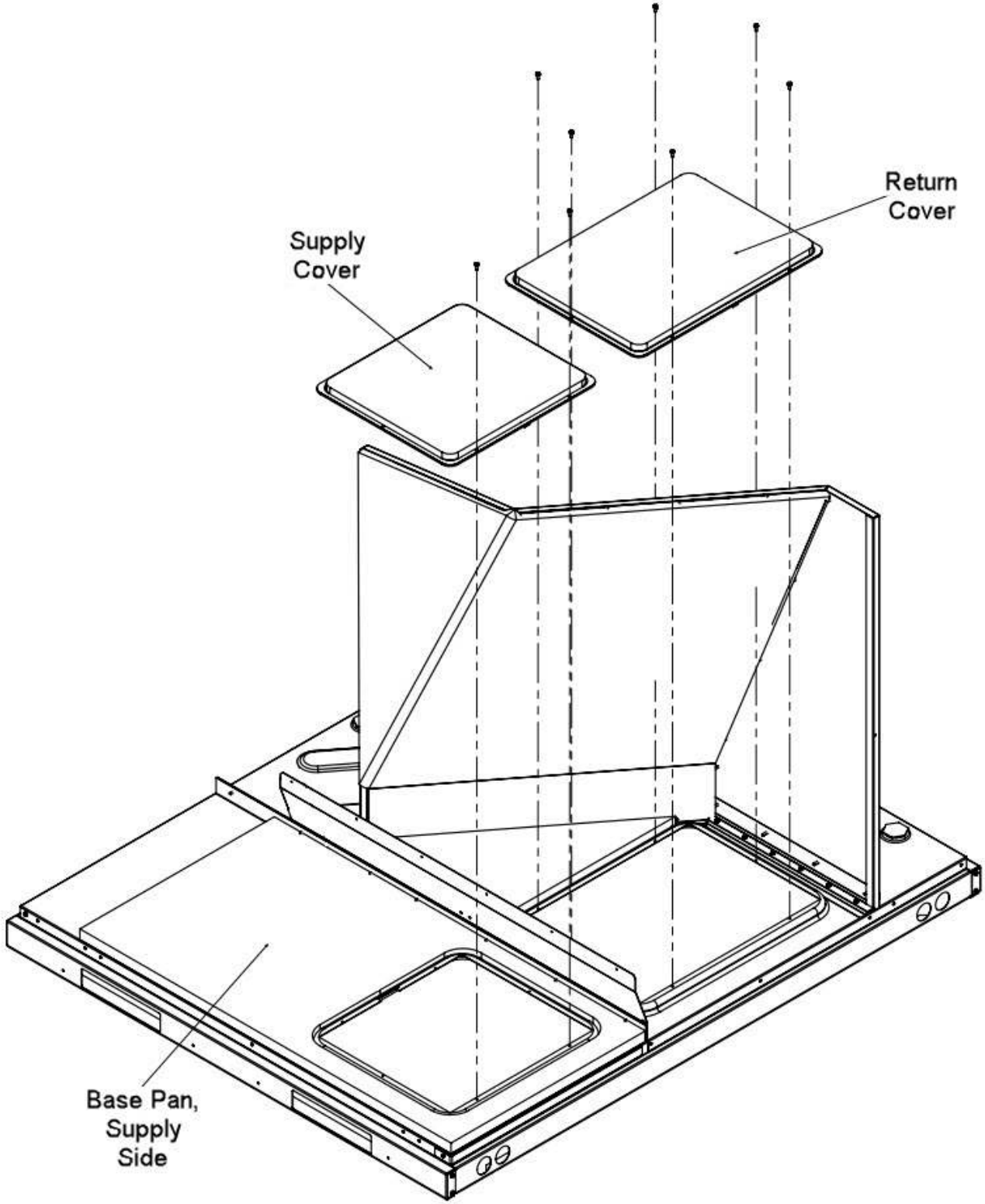

RHPXY parts breakdown: ADS-105127-19X 5 Internal View

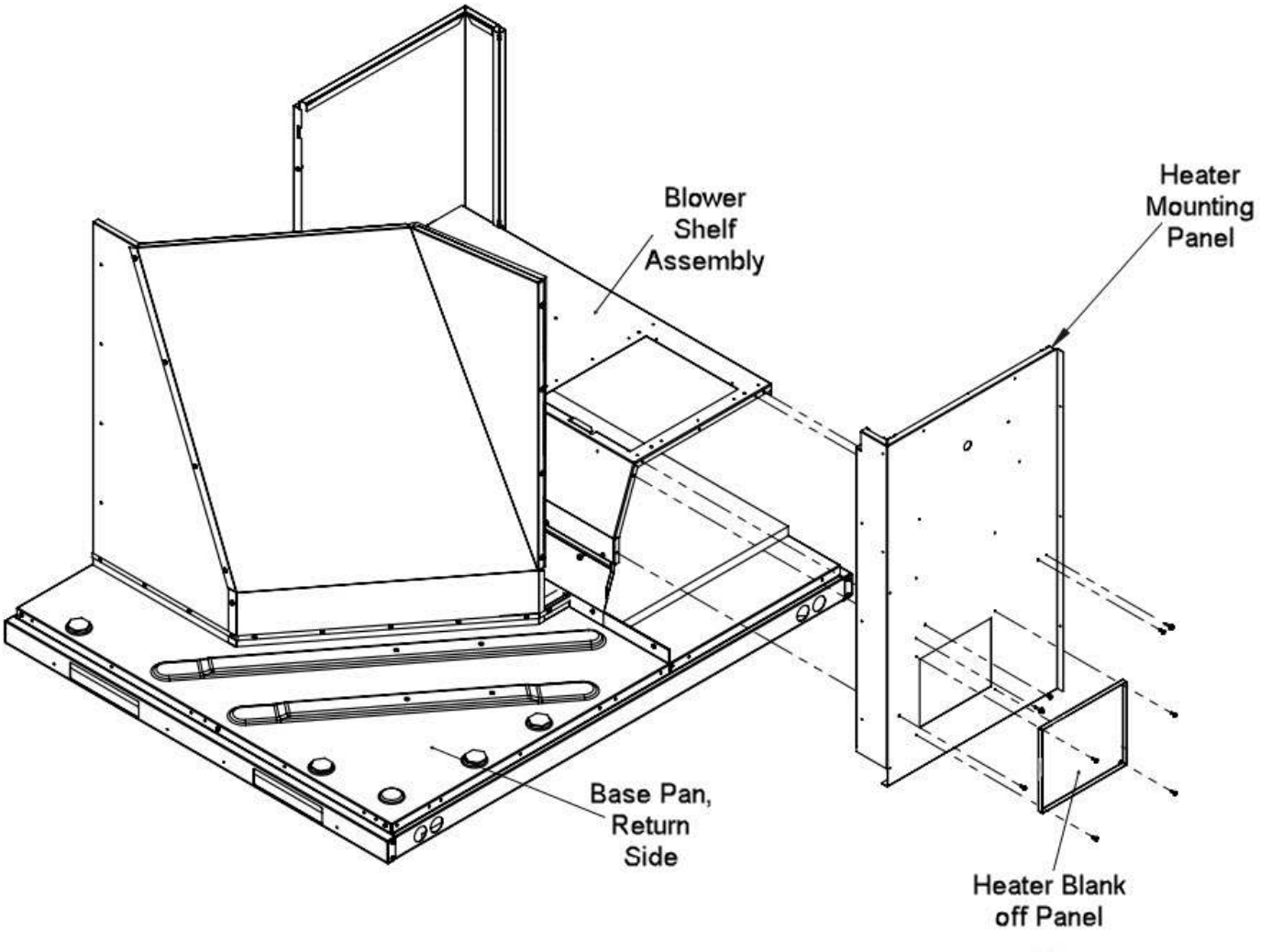

RHPXY parts breakdown: ADS-105127-19X 6 Control Panel

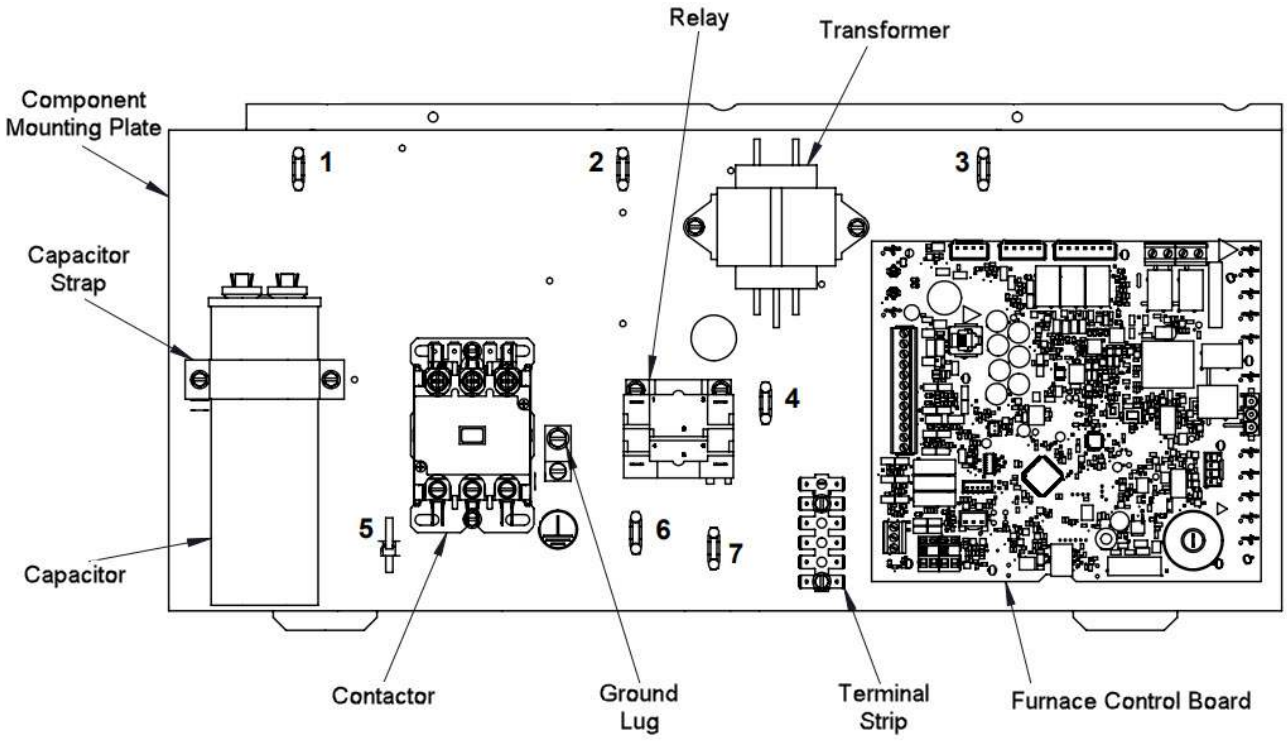

RHPXY parts breakdown: ADS-105127-19X 7 Blower Area

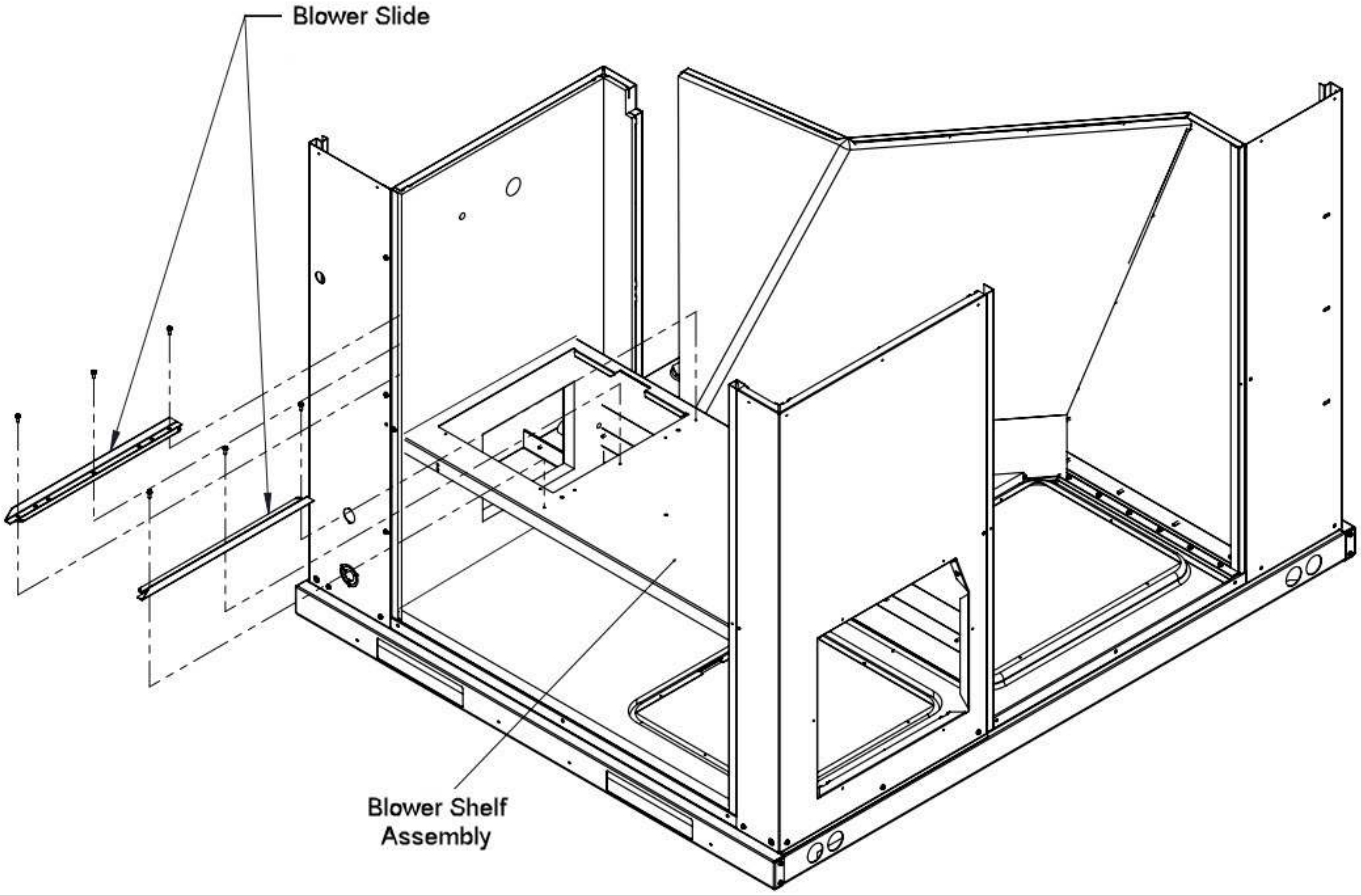

RHPXY parts breakdown: ADS-105127-19X 7 Blower Assembly

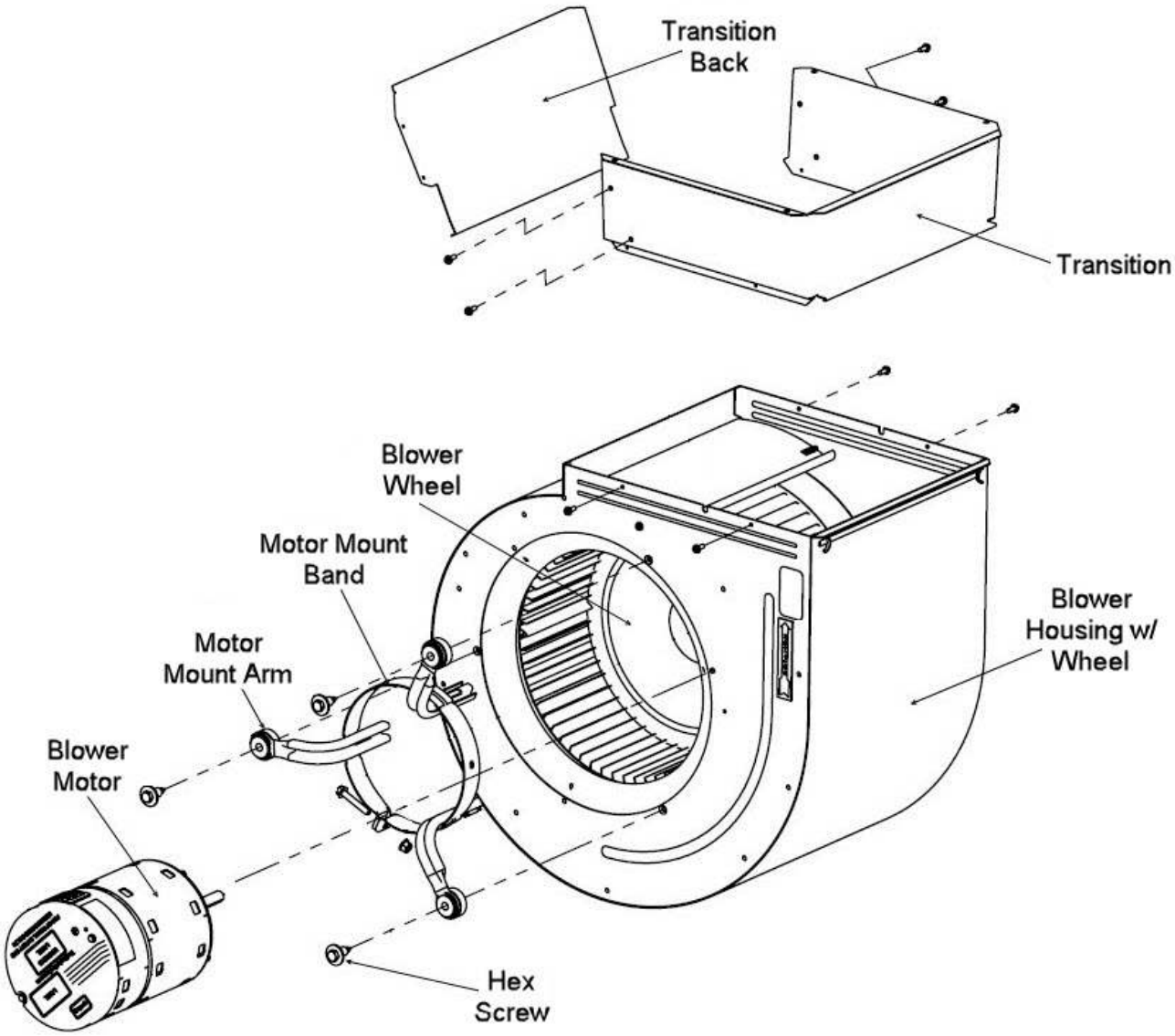

RHPXY parts breakdown: ADS-105127-19X 8 Outdoor Fan View

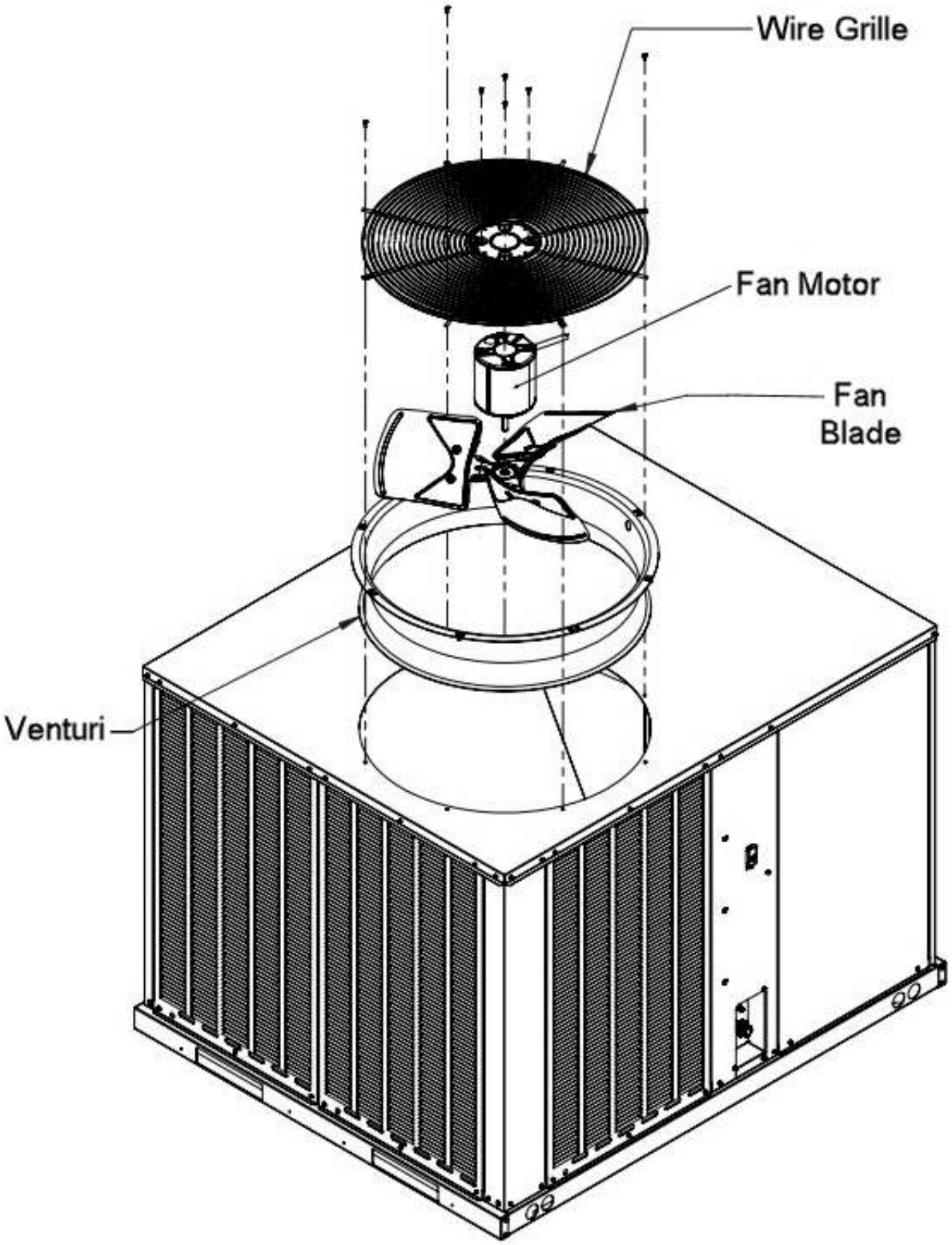

RHPXY parts breakdown: ADS-105127-19X 9 Outdoor Coil

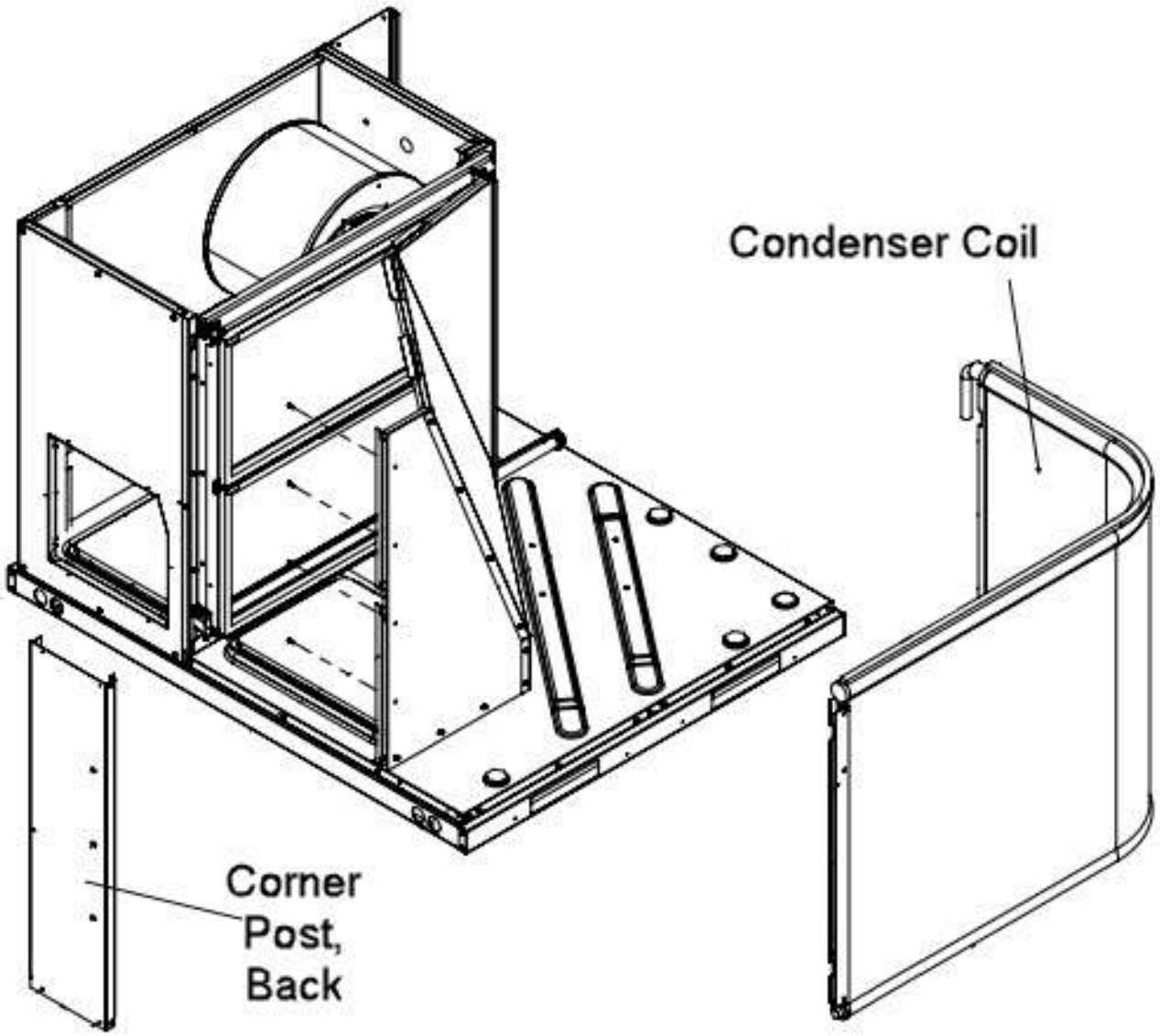

RHPXY parts breakdown: ADS-105127-19X 9 Indoor Coil

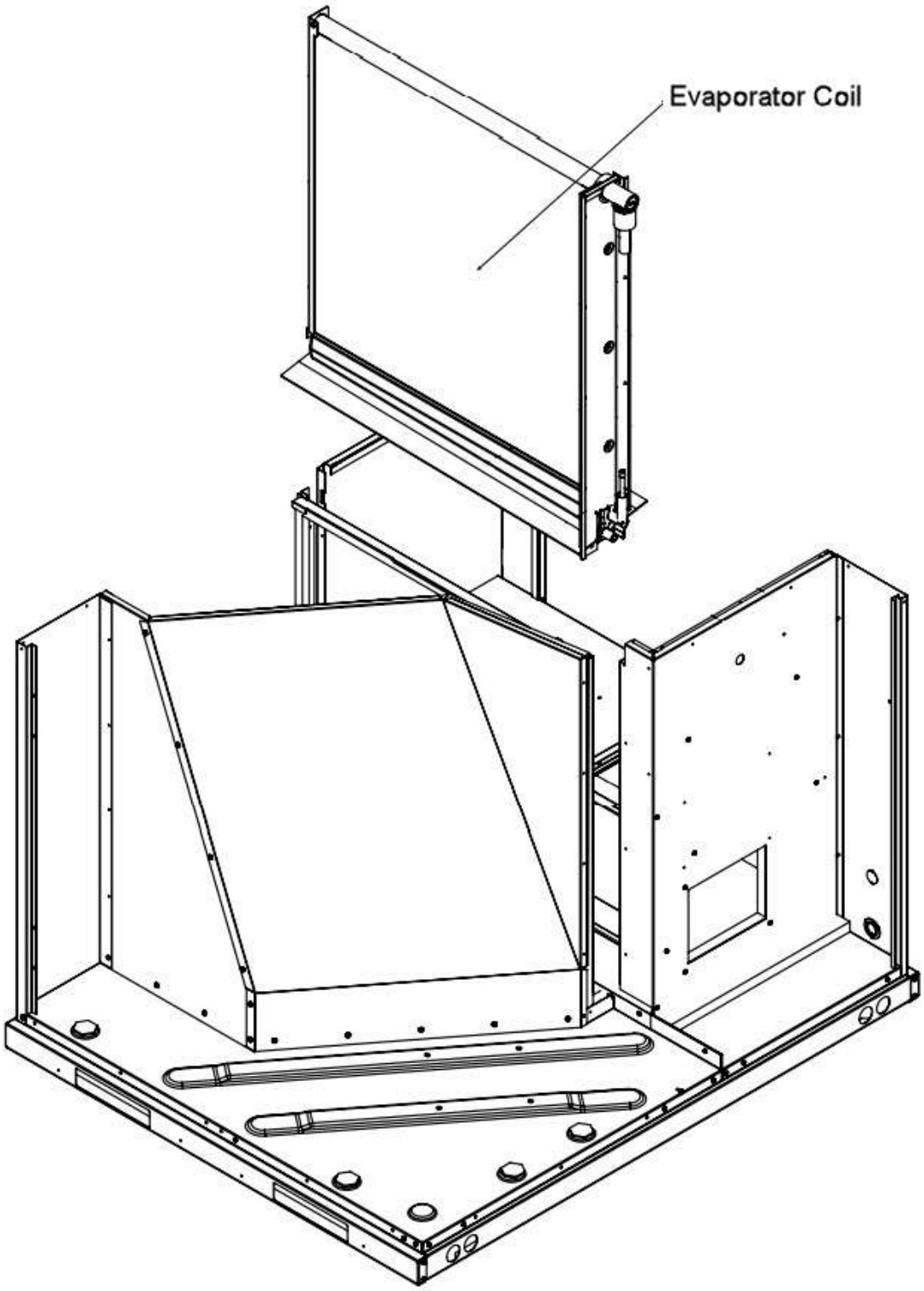

RHPXY parts breakdown: ADS-105128-19X 10 Compressor Area

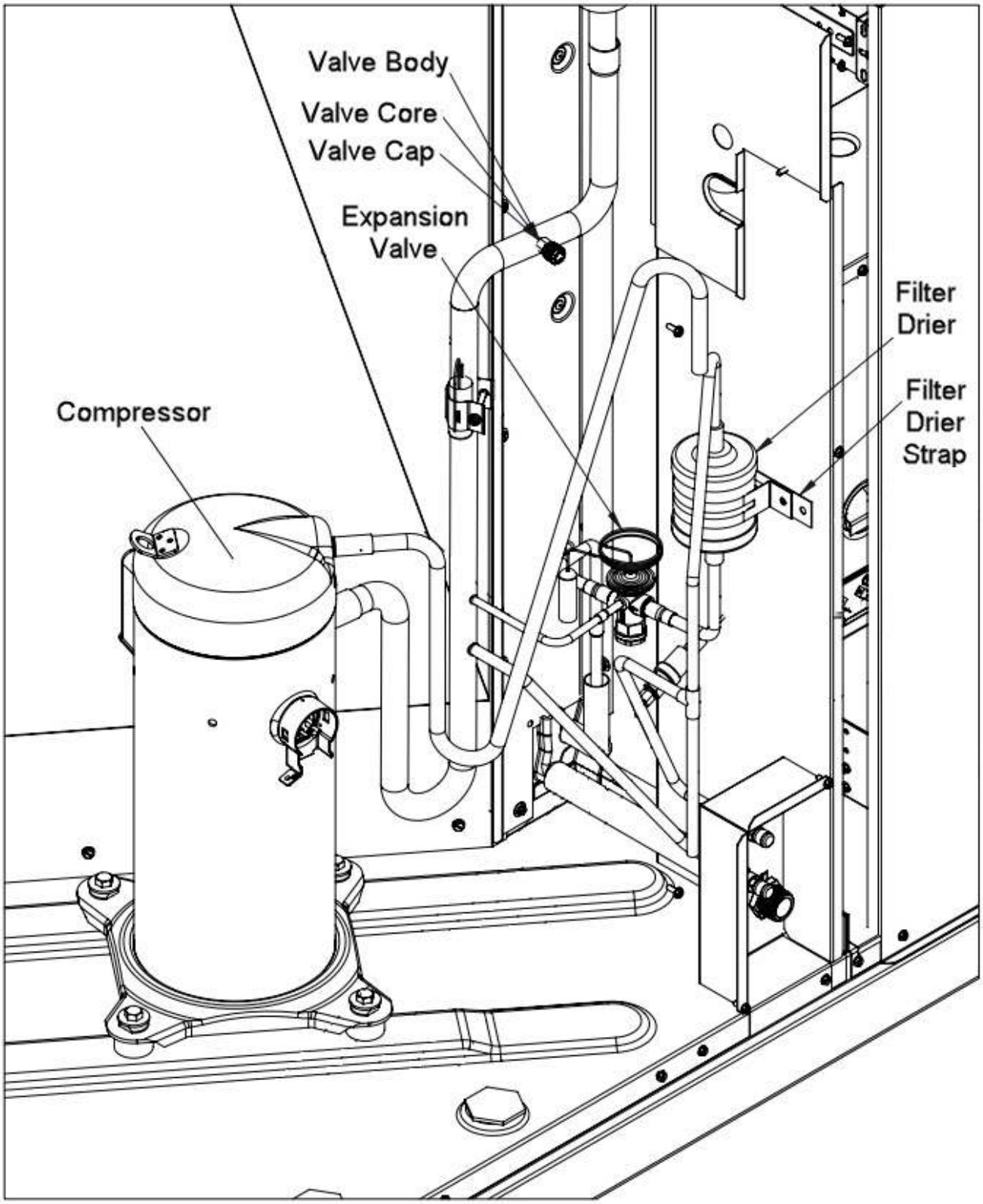

RHPXY parts breakdown: ADS-105128-19X 6 Control Panel HP

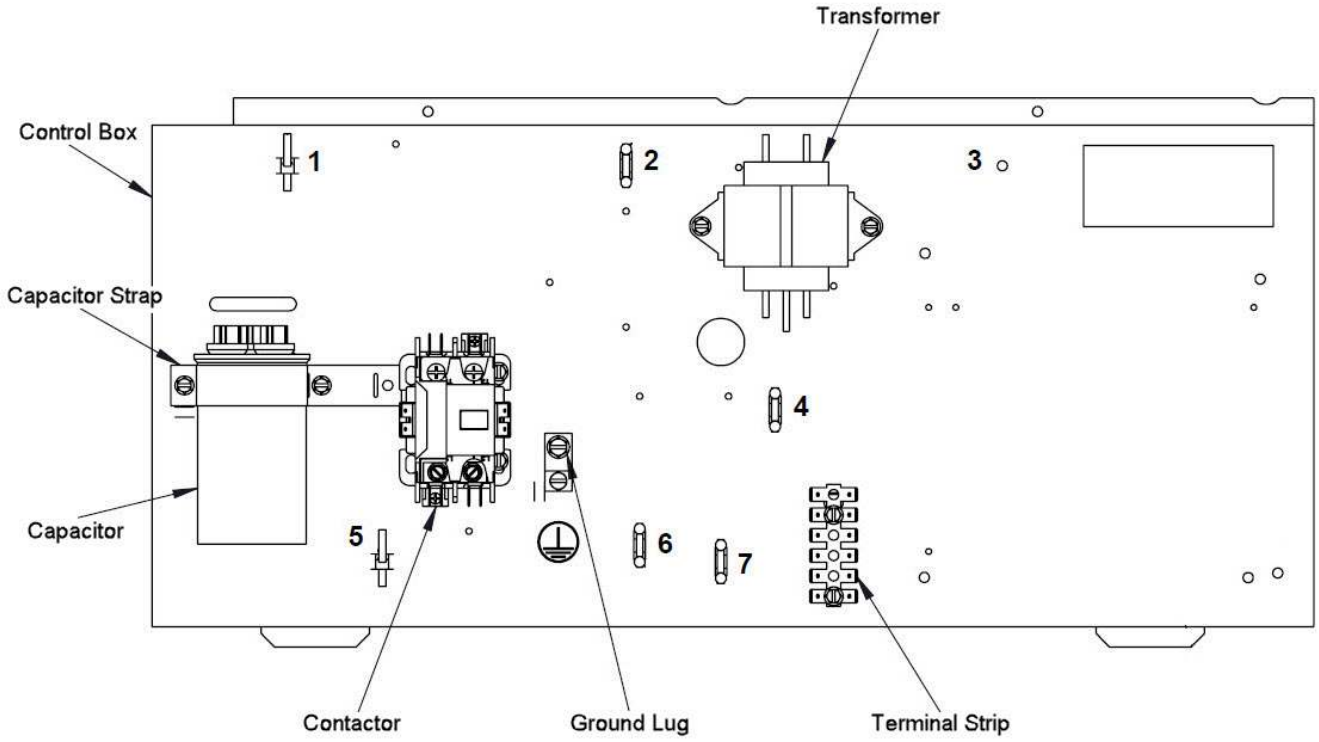

RHPXY parts breakdown: ADS-105134-18X 10 Compressor Area

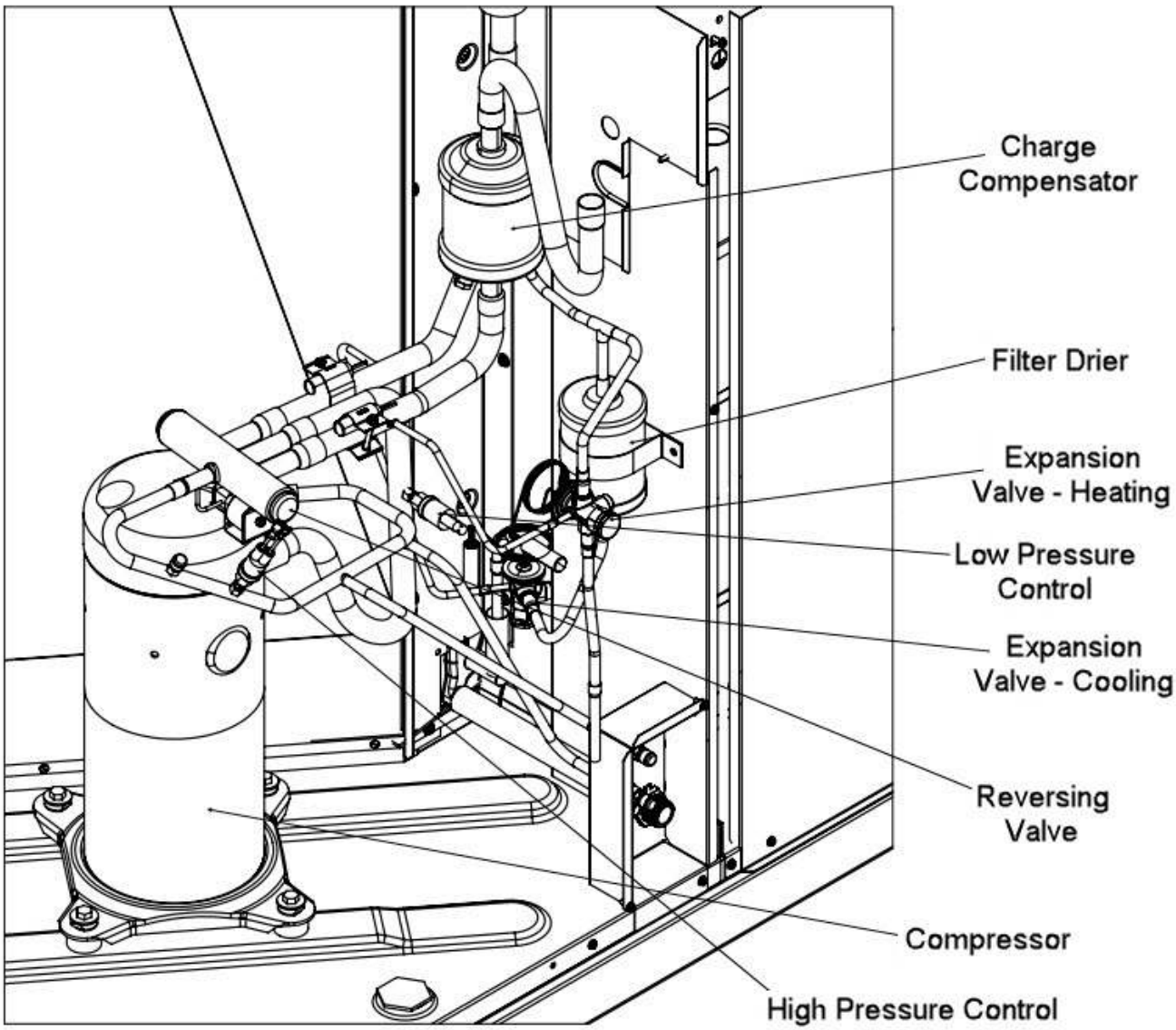

RHPXY parts breakdown: ADS-105134-18X 6 Control Panel HP

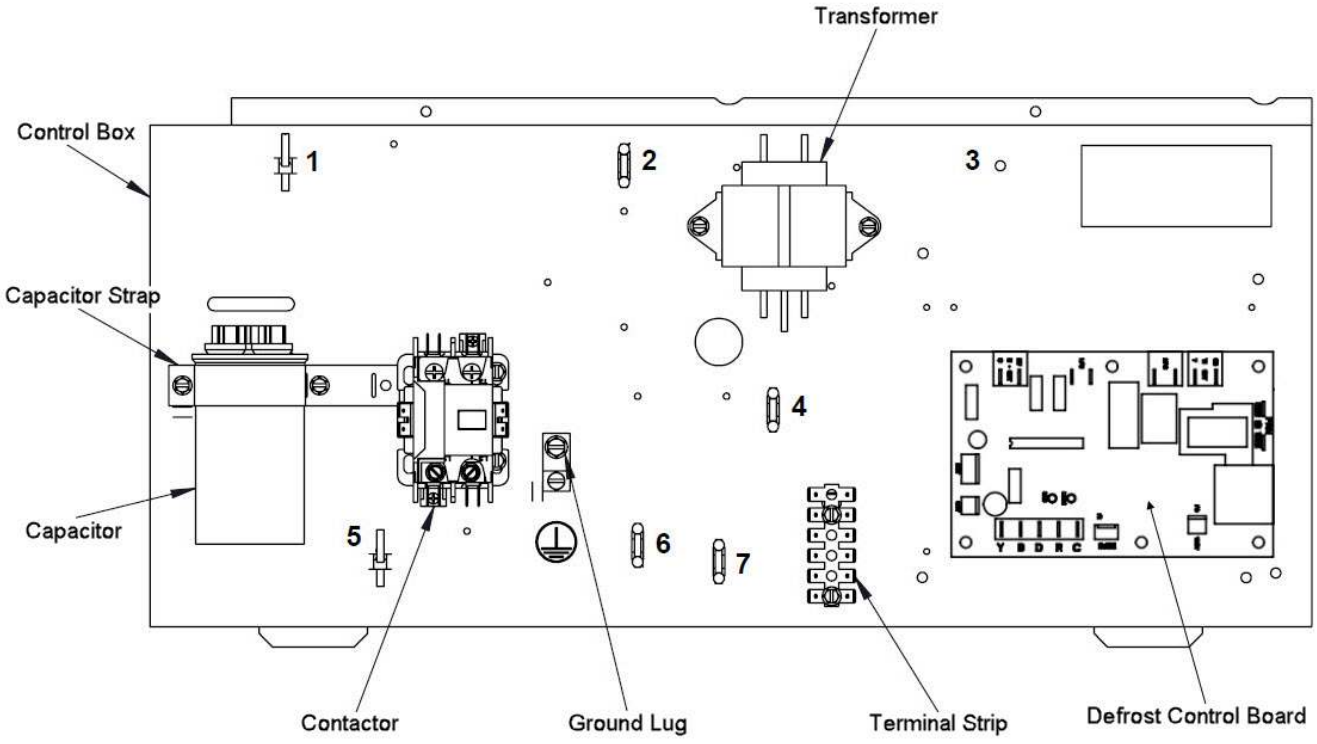

Compressor

Part No.	Description	Qty	Replaced By	Fits Models
55-107225-238	Compressor	1		RHPXYC024AJT000NA, RHPXYC036AJT000NA
55-107225-240	Compressor	1		RHPXYC048AJT000NA
55-107225-241	Compressor	1		RHPXYB060AJT000NA, RHPXYC060AJT000NA
55-107225-252	Compressor	1		RHPXYB036AJT000NA
55-107225-254	Compressor	1		RHPXYB042AJT000NA
55-107225-256	Compressor - YBH042KAA - LG	1		RHPXYB048AJT000NA
AS-108990-03HT	Compressor Access Panel (Short)	1		All models
63-20072-03	Compressor Mounting Screw (1-1/2 in. long)	4		All models
45-107231-02K	Compressor Plug Assembly Kit - LG	1		All models
56-18518-16	Mounting Grommet - Compressor	4		All models
AE-108711-04HT	Panel - Compressor Access (Short)	1		All models

Motors & fans

Part No.	Description	Qty	Replaced By	Fits Models
AS-108843-01	Blower Assembly	1		All models
70-100840-02	Blower Assembly-Housing and Wheel only	1		All models
51-102500-10	Condenser Motor - 1/3 hp 208-230/1/60 (825 rpm/1 speed)	1		RHPXYB036AJT000NA, RHPXYC024AJT000NA, RHPXYC036AJT000NA, RHPXYC048AJT000NA
70-102345-20	Fan Blade	1		RHPXYC060AJT000NA
70-101323-73	Fan Blade 24 in. 3-Blade	1		RHPXYB036AJT000NA, RHPXYC048AJT000NA
70-101323-30K	Fan Blade Kit	1		RHPXYB042AJT000NA, RHPXYB048AJT000NA, RHPXYB060AJT000NA
51-110551-02	Motor - Broad Ocean (208-230V - 1 hp)	1		RHPXYB060AJT000NA, RHPXYC060AJT000NA
51-110551-00	Motor - Broad Ocean (208-230V - 1 hp) - BLANK	1		RHPXYB060AJT000NA, RHPXYC060AJT000NA
51-110424-02	Motor - Broad Ocean PSC - 1/2 hp, 825 rpm, 60Hz, 1PH, 230V	1		RHPXYB060AJT000NA
51-110424-03	Motor - Broad Ocean PSC - 1/3 hp, 825 rpm, 60Hz, 1PH, 230V	1		RHPXYB042AJT000NA, RHPXYB048AJT000NA
51-108728-140	Motor - ENSITE Air (230V - 1/2 hp)	1		RHPXYB036AJT000NA
51-108729-18	Motor - ENSITE Air (230V - 3/4 hp)	1		RHPXYB048AJT000NA
51-108729-19	Motor - ENSITE Air (230V - 3/4 hp)	1		RHPXYB042AJT000NA
51-106545-46	Motor - SelecTech Gen 3 (230V - 1/2 hp)	1		RHPXYC036AJT000NA
51-106545-58	Motor - SelecTech Gen 3 (230V - 1/2 hp)	1		RHPXYC024AJT000NA
51-106545-00	Motor - SelecTech Gen 3 (230V - 1/2 hp) - BLANK	1		RHPXYB036AJT000NA, RHPXYC024AJT000NA, RHPXYC036AJT000NA
51-106546-00	Motor - SelecTech Gen 3 (230V - 3/4 hp) - BLANK	1		RHPXYB042AJT000NA, RHPXYB048AJT000NA, RHPXYC048AJT000NA
70-19929-09	Motor Mount Arm w/Grommet	3		All models
70-19927-03	Motor Mount Band	1		All models
51-109694-01	Motor-1/2 hp-OD-ECM-739/934 Rpm-460V	1		RHPXYC060AJT000NA

Electrical

Part No.	Description	Qty	Replaced By	Fits Models
43-101665-06	Capacitor - 35/5/440 Dual Round	1		RHPXYC048AJT000NA
43-25133-14	Capacitor - 40/5/440 Dual Round	1		RHPXYC024AJT000NA, RHPXYC036AJT000NA
43-25133-24	Capacitor - 45/10/440 Dual Round	1		RHPXYB042AJT000NA, RHPXYB060AJT000NA
43-101666-68	Capacitor - 45/440 Single Round	1		RHPXYC060AJT000NA
43-25133-16	Capacitor - 45/5/440 Dual Round	1		RHPXYB036AJT000NA
43-101665-68	Capacitor - 70/10/440 Dual Round	1		RHPXYB048AJT000NA
42-109499-06K	Contactor 32A XMC0-321 1P 1PH A2L	1		All models
47-102684-204	Defrost Control Board Kit	1		All models
AS-108987-01	Electrical Pass-Thru Short	1		All models
45-19000-01	Ground Lug	1		All models

Part No.	Description	Qty	Replaced By	Fits Models
45-104222-04	Housing Assembly - Cap	1		All models
45-105282-06	Power Supply Harness - Control Panel To Constant Torque Motor	1		All models
42-25106-01	Relay - DPDT (24VAC coil)	1		RHPXYC024AJT000NA
47-109642-01	Sensor A2L (Sensirion)	1		All models
PD476604	Sensor Kit	1		All models
45-42548-02	Terminal Block	1		All models
45-23591-01	Terminal Strip	1		All models
46-100836-05	Transformer	1		All models
45-50205-09-DE	Wire Assembly	1		RHPXYC024AJT000NA
61-26149-06	Wiring Harness - Reversing Valve	1		All models
45-110324-06	Wiring Harness Assembly - RDS Legacy AC HP	1		All models
45-110324-02	Wiring Harness Assembly - RDS X-CAB	1		All models

Valves & switches

Part No.	Description	Qty	Replaced By	Fits Models
47-102290-01K	High Pressure Limit Kit - Auto Reset	1		All models
47-102240-02K	Low Pressure Limit Kit - Auto Reset	1		All models
61-102498-06	Reversing Valve	1		All models
61-109438-44	Thermostatic Expansion Valve (TXV)	1		RHPXYB048AJT000NA, RHPXYB060AJT000NA, RHPXYC048AJT000NA, RHPXYC060AJT000NA
61-109438-39	Thermostatic Expansion Valve (TXV) - Indoor (Cooling)	1		RHPXYB036AJT000NA, RHPXYB042AJT000NA, RHPXYB048AJT000NA, RHPXYC024AJT000NA, RHPXYC036AJT000NA, RHPXYC048AJT000NA
61-109438-40	Thermostatic Expansion Valve (TXV) - Outdoor (Heating)	1		RHPXYB036AJT000NA, RHPXYC024AJT000NA, RHPXYC036AJT000NA
61-109438-42	Thermostatic Expansion Valve (TXV) - Outdoor (Heating)	1		RHPXYB042AJT000NA
61-109438-46	Thermostatic Expansion Valve (TXV) - Outdoor (Heating)	1		RHPXYB060AJT000NA, RHPXYC060AJT000NA
61-18551-01	Valve Core	3		All models

Coil & refrigeration

Part No.	Description	Qty	Replaced By	Fits Models
83-107162-13	Charge Compensator	1		RHPXYB048AJT000NA, RHPXYB060AJT000NA, RHPXYC048AJT000NA, RHPXYC060AJT000NA
82-18419-01	Copper Tee	1		RHPXYB048AJT000NA, RHPXYB060AJT000NA, RHPXYC048AJT000NA, RHPXYC060AJT000NA
61-106118-01	CoreMax Valve Core	2		All models
AS-109006-03	Heat Pump Outdoor Coil Assembly 16MM	1		RHPXYB036AJT000NA, RHPXYB042AJT000NA, RHPXYC024AJT000NA, RHPXYC036AJT000NA
83-104825-03	Liquid Line Filter Drier (Bi-Directional)	1		All models
AS-108995-01	Micro Channel Evaporator Assembly	1		RHPXYB060AJT000NA, RHPXYC060AJT000NA
AS-108995-02	Micro Channel Evaporator Assembly	1		RHPXYB036AJT000NA, RHPXYB042AJT000NA, RHPXYB048AJT000NA, RHPXYC024AJT000NA, RHPXYC036AJT000NA, RHPXYC048AJT000NA
AS-108761-01	Micro Channel Heat Exchanger Bent (RH728)	1		RHPXYB060AJT000NA, RHPXYC060AJT000NA
AS-108763-01	Micro Channel Heat Exchanger Bent (RH730)	1		RHPXYB048AJT000NA, RHPXYC048AJT000NA
82-110960-01	Tube - Low Gauge port Assembly	1		RHPXYB036AJT000NA, RHPXYB042AJT000NA, RHPXYC024AJT000NA, RHPXYC036AJT000NA
64-21106-02	TXV Bulb Strap Mounting Kit	2		All models

Cabinet & hardware

Part No.	Description	Qty	Replaced By	Fits Models
83-100635-01	Access Valve Cap	3		All models
83-100635-05	Access Valve Cap	3		All models
AS-108364-09	Base Pan Assembly - Supply Side w/Insulation	1		All models

Part No.	Description	Qty	Replaced By	Fits Models
AS-108364-06	Base Pan Return Side Assembly w/Insulation	1		All models
AE-58562-08	Base Rail	2		All models
AE-108321-01	Base Rail - Front	2		All models
AS-108364-05HT	Blower Access Panel Assembly (Short) w/Insulation	1		All models
AS-108979-01	Blower Shelf Assembly - Includes Blower Shelf, Slides and Transition	1		All models
AE-108760-01	Blower Slide	2		All models
63-19919-01	Bolt, 1/4-20 x 1-1/2 in.	1		All models
AE-102859-21	Bracket - Air Sensor	1		All models
AS-108364-23	Bulkhead Insulation Assembly - Short	1		All models
AE-108284-03	Bulkhead-Short	1		All models
45-17055-07	Bushing - Strain Relief	1	OBSOLETE	All models
45-17055-11	Bushing - Strain Relief	1		All models
45-17055-15	Bushing - Strain Relief	1		All models
64-101148-06	Cable Tie - Double Loop, 7.6"	2		All models
AE-50892-59	Capacitor Strap	1		RHPXYB036AJT000NA, RHPXYB042AJT000NA, RHPXYB048AJT000NA, RHPXYB060AJT000NA, RHPXYC024AJT000NA, RHPXYC036AJT000NA, RHPXYC048AJT000NA
AS-108988-01HT	Condenser Louver Panel Assembly (Short)	3		All models
AE-107932-01	Control Box Back Panel	1		All models
AS-108830-04	Control Box Shelf Assembly (HP)	1		All models
68-108716-01	Drain Pan	1		All models
AE-58586-01HT	Duct Cover - Return Air	1		All models
AE-58587-01HT	Duct Cover - Supply Air	1		All models
64-23207-02	EZ Twist Lock Support Fastener	6		All models
68-42246-01	Gasket - 1,250 ft. long x 1/8 in. thick x 1/2 in. wide	4/9		All models
68-22079-84	Gasket - Neoprene (1/8 in. x 1/2 in.) - 100 ft. Roll	1/2/3/4/6		All models
68-20243-02	Gasket Stripping - 3/8 in. x 3/4 in. x 36 ft. roll	4/6		All models
AS-108847-01	Heater Blank off Panel Assembly (Only for No Heat Models)	1		RHPXYB036AJT000NA, RHPXYB042AJT000NA, RHPXYB048AJT000NA, RHPXYB060AJT000NA, RHPXYC024AJT000NA, RHPXYC048AJT000NA, RHPXYC060AJT000NA
AE-108288-01HT	Heater Corner Post - Short	1		All models
AS-108989-01HT	Heater Corner Post Assembly - Short	1		All models
63-17189-03	Hex Nut, 1/4-20, w/External Tooth Lock Washer	1		All models
63-17189-01	Hex Nut, 8-32, w/External Tooth Lock Washer	4		RHPXYB060AJT000NA, RHPXYC060AJT000NA
68-20185-01	Insulation	1/2		All models
AS-108364-22	Insulation Assembly - Heater Mounting Panel Short	1		All models
64-25340-02	Locking Wing Push Mount Tie	1		All models
AS-108992-01HT	Outdoor Back Corner Post Assembly (Short) w/Insulation	1		All models
AS-108993-01HT	Outdoor Corner Post Assembly (Short) w/Insulation	1		All models
AS-108986-01	Panel Assembly - Service Ports	1		All models
68-42246-04	Poron Gasket 1/8" X 1/2" X 12 Ft Roll	12		All models
AS-108364-03HT	Return Access Panel Assembly (Short) w/Insulation	1		All models
AS-108836-01HT	Return Duct Cover Insulation Assembly	1		All models
63-20072-05	Screw	3		All models
67-24036-01	Sealant	1		All models
AE-109647-01	Sensor Mounting Bracket	1		All models
63-42112-09	Sheet Metal Screw w/ Gasket, 8-18 x 1 in.	2/5/6/12		All models

Part No.	Description	Qty	Replaced By	Fits Models
63-42112-07	Sheet Metal Screw w/ Gasket, 8-18 x 5/8 in.	2/8/12		All models
63-42109-06	Sheet Metal Screw, 10-16 x 1-1/4 in.	4		All models
63-22153-03	Sheet Metal Screw, 8-18 x 1-1/4 in.	6		All models
63-24368-01	Sheet Metal Screw, 8-18 x 1/4 in.	2/15		All models
63-22153-02	Sheet Metal Screw, 8-18 x 7/8 in.	2		All models
45-18515-01	Snap-In Bushing - Conductor Protection	1		All models
45-42519-01	Snap-In Bushing - Conductor Protection	1		All models
63-22429-01	Stainless Steel Sheet Metal Screw, 8-18 x 1/2 in.	1/2/3/4/5/6/8/9/16/18		All models
68-21799-03	Stripping - 1-3/8 in. x 1 ft.	4		All models
AS-108837-01HT	Supply Duct Cover Insulation Assembly	1		All models
AS-108364-02HT	Supply Panel Assembly w/Insulation	1		All models
63-100404-06	Thread-Forming Screw (black), 10-32 x 7/16 in.	4		All models
63-22487-01	Thread-Forming Screw, 10-32 x 1/2 in.	1		All models
63-100404-03	Thread-Forming Screw, 12-24 x 3/4 in.	4		All models
AS-108364-01HT	Top Panel Assembly w/Insulation	1		All models
AE-102207-05	Transition	1		All models
AE-102207-06	Transition	1		All models
68-104464-06	Venturi	1		All models
AS-108991-01HT	Vestibule Access Panel Assembly (Short)	1		All models
AE-108715-01	Vestibule Block-Off	1		All models
AS-108985-01	Vestibule Block-Off Assembly	1		All models
64-17606-06	Wire & Cable Tie - Nylon Black - 7-1/2 in.	1		All models
64-17606-01	Wire & Cable Tie - Nylon Black - 8 in.	2		All models
95-105939-02	Wire Grille	1		All models