Rheem RP17AY Heat Pump Replacement Parts List

Parts list RP-RHM-RP17AY | Updated Nov 2026 | 127 parts | 8 model numbers

Genuine Rheem OEM part numbers for the models listed below, compiled from Rheem Manufacturing's service parts catalog. Quantities are per unit. Where Rheem has replaced a part number, the current number is shown under Replaced By. Always confirm the full model and serial number of the unit before ordering.

Models covered

RP17AY24A, RP17AY24AJVCA, RP17AY36A, RP17AY36AJVCA, RP17AY48A, RP17AY48AJVCA, RP17AY60A, RP17AY60AJVCA

RP17AY parts breakdown: EXPLODED VIEW

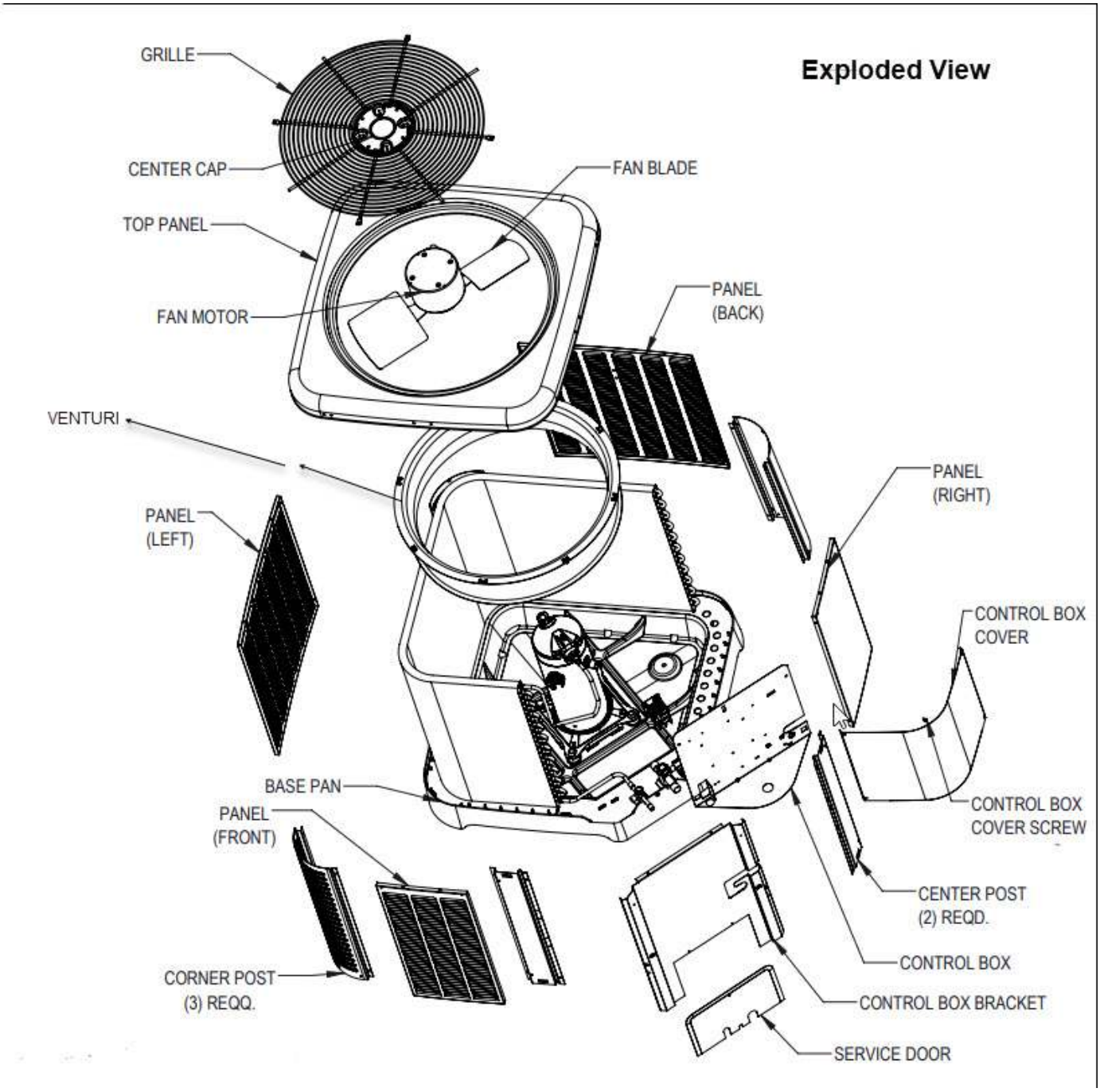

RP17AY parts breakdown: CONTROL BOARD

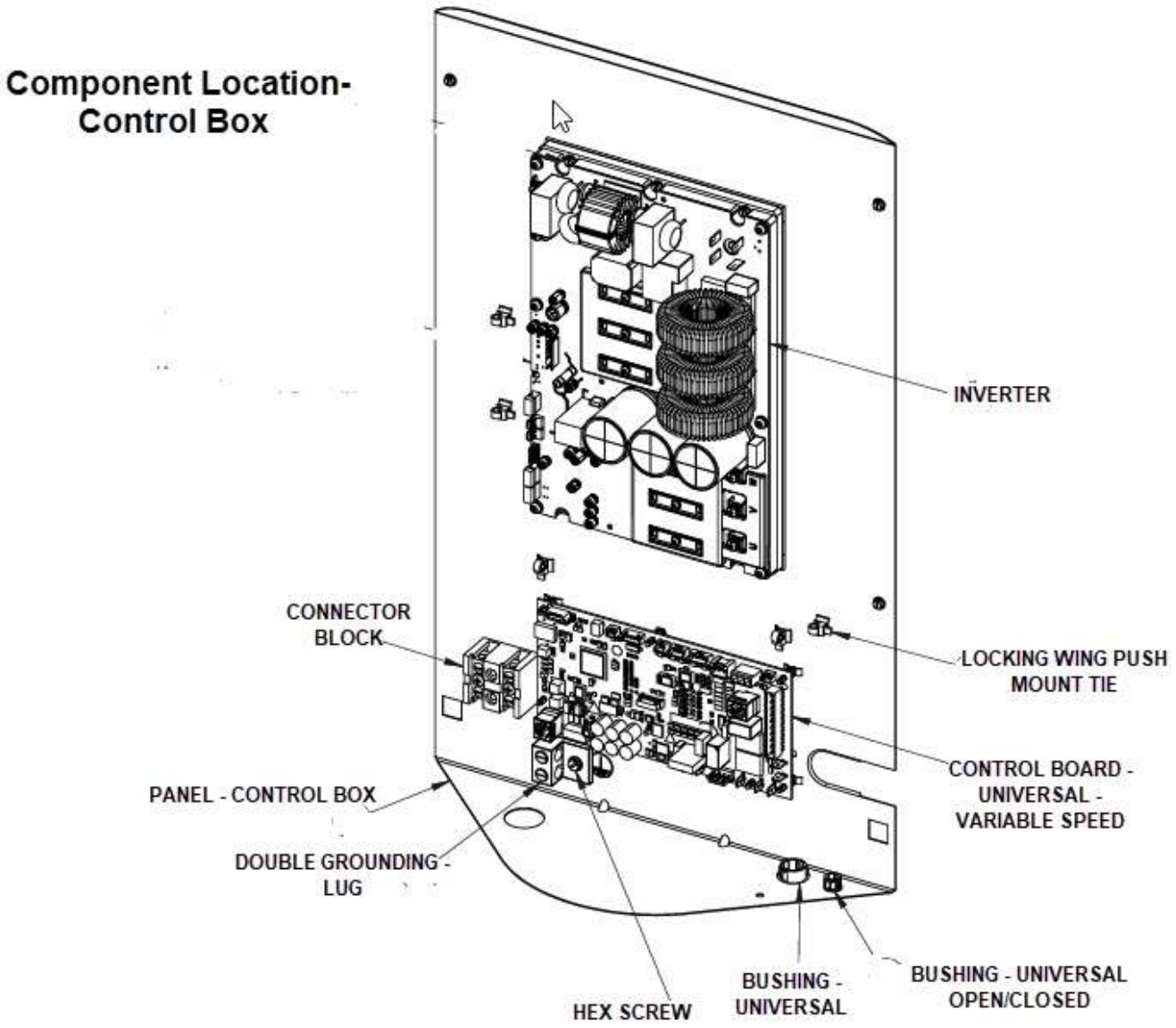

RP17AY parts breakdown: COMPRESSOR ASSY P17AY24 - GMCC

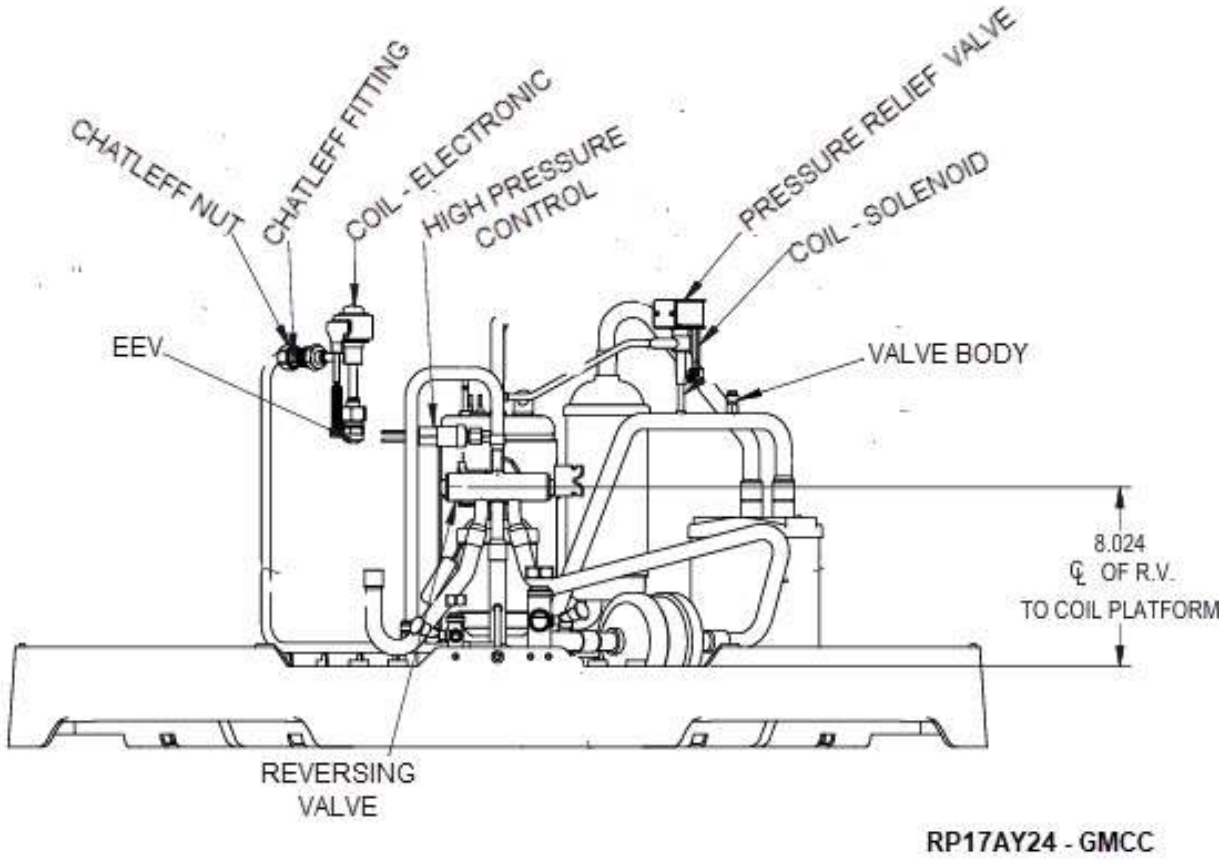

RP17AY parts breakdown: COMPRESSOR ASSY.HIGHLY RP17AY24

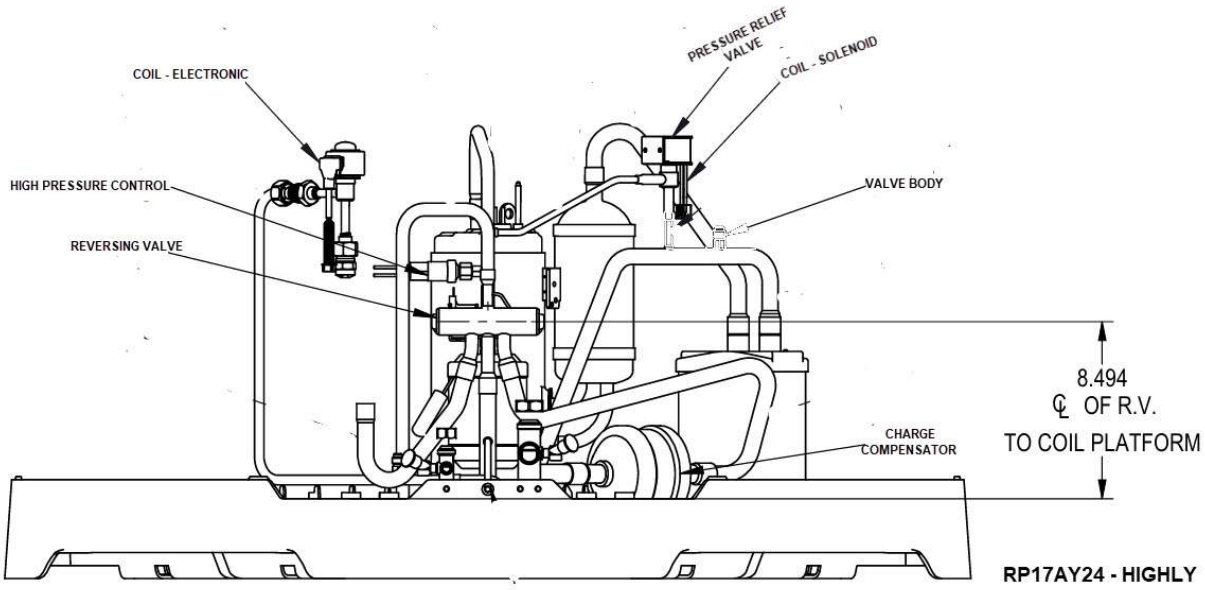

RP17AY parts breakdown: COMPRESSOR ASSY RP17AY36 GMCC

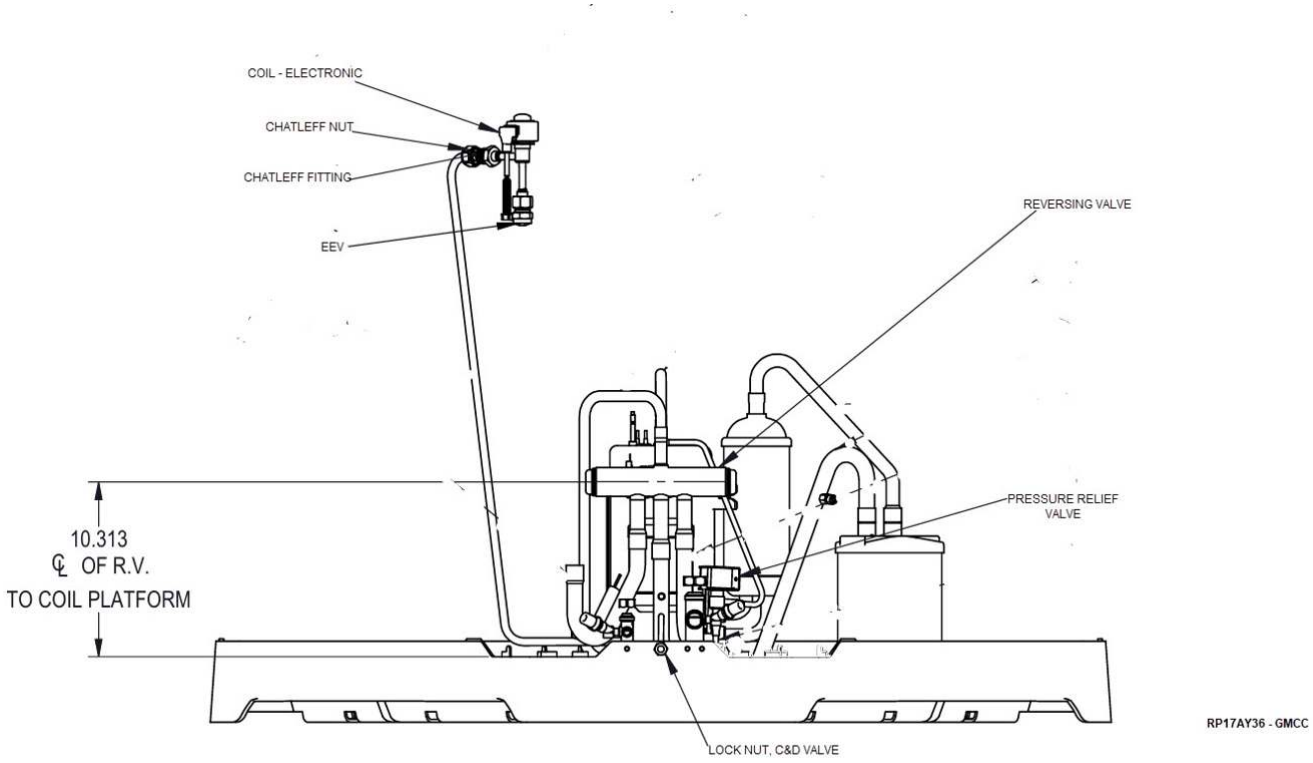

RP17AY parts breakdown: COMPRESSOR ASSY RP17AY36 HIGHLY

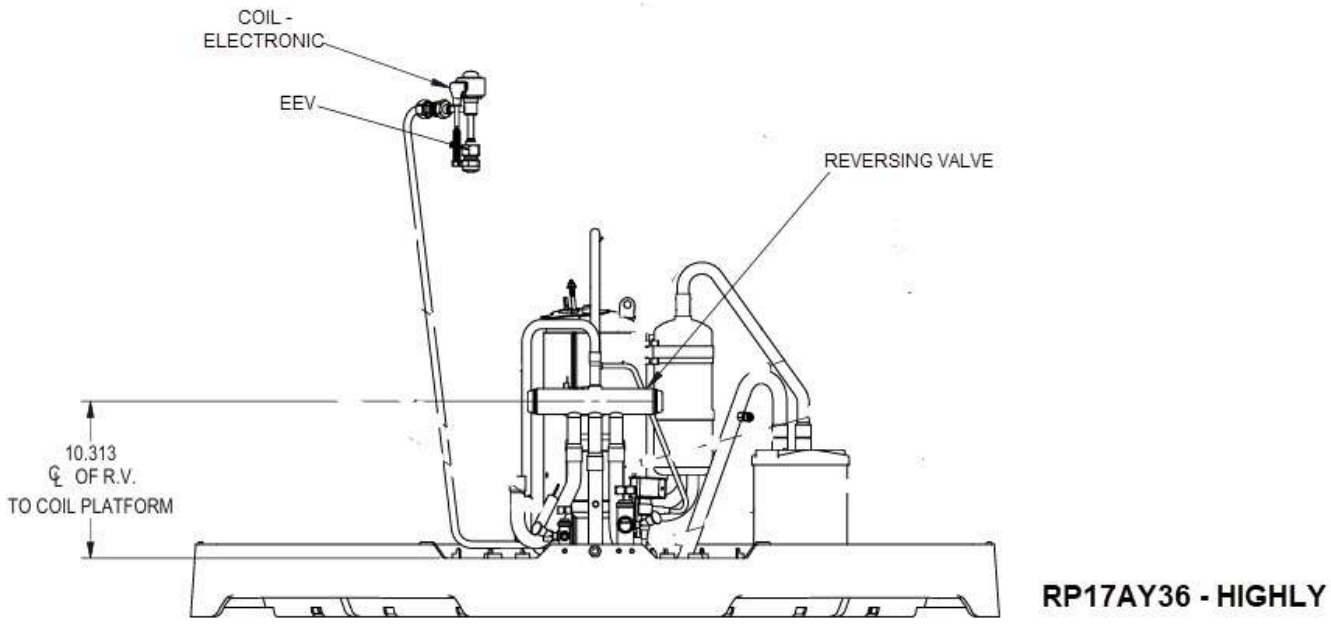

RP17AY parts breakdown: COMPRESSOR ASSY RP17AY36 HIGHLY 1

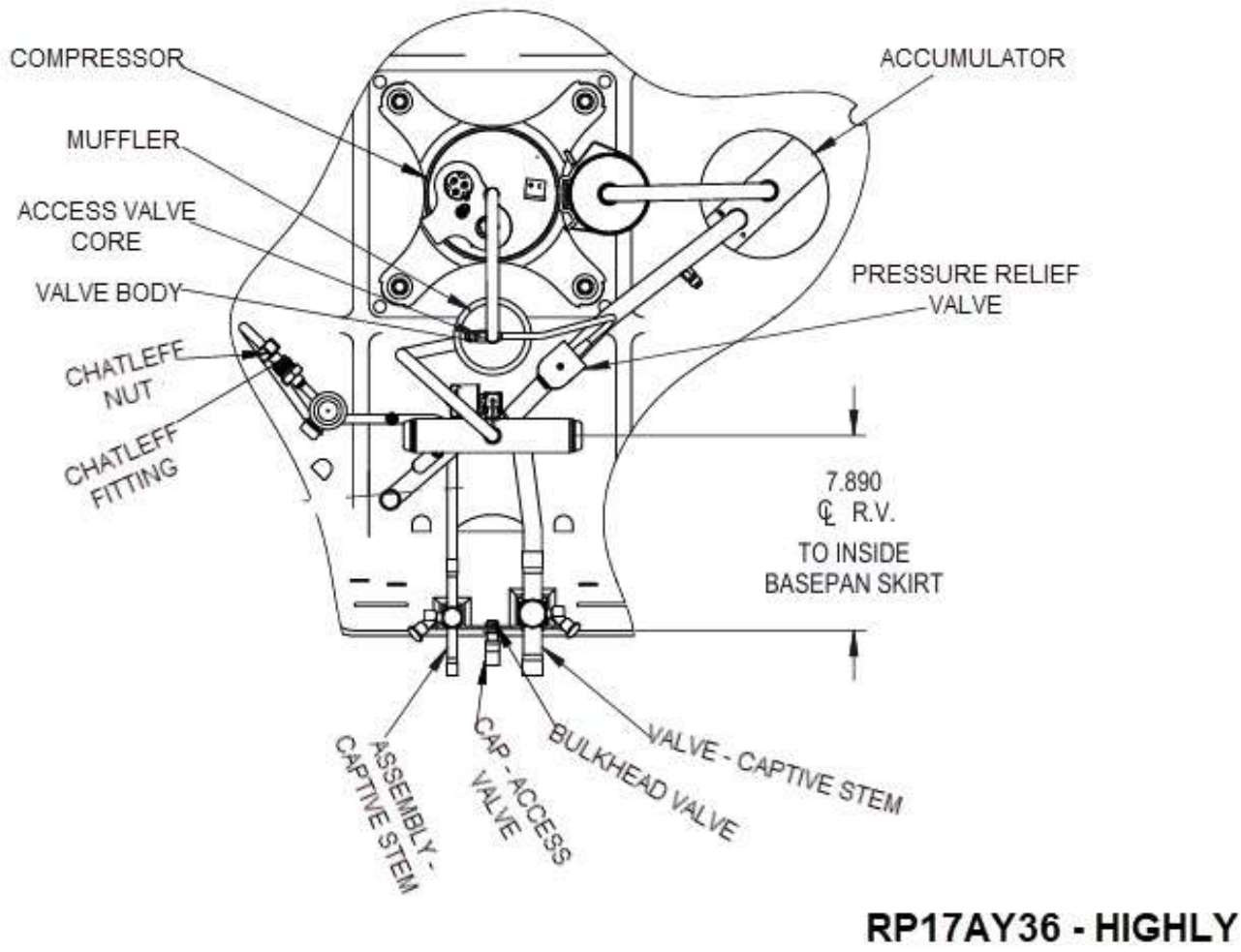

RP17AY36 - HIGHLY

RP17AY parts breakdown: COMPRESSOR ASSY 28- 29P17AY48 - GMCC

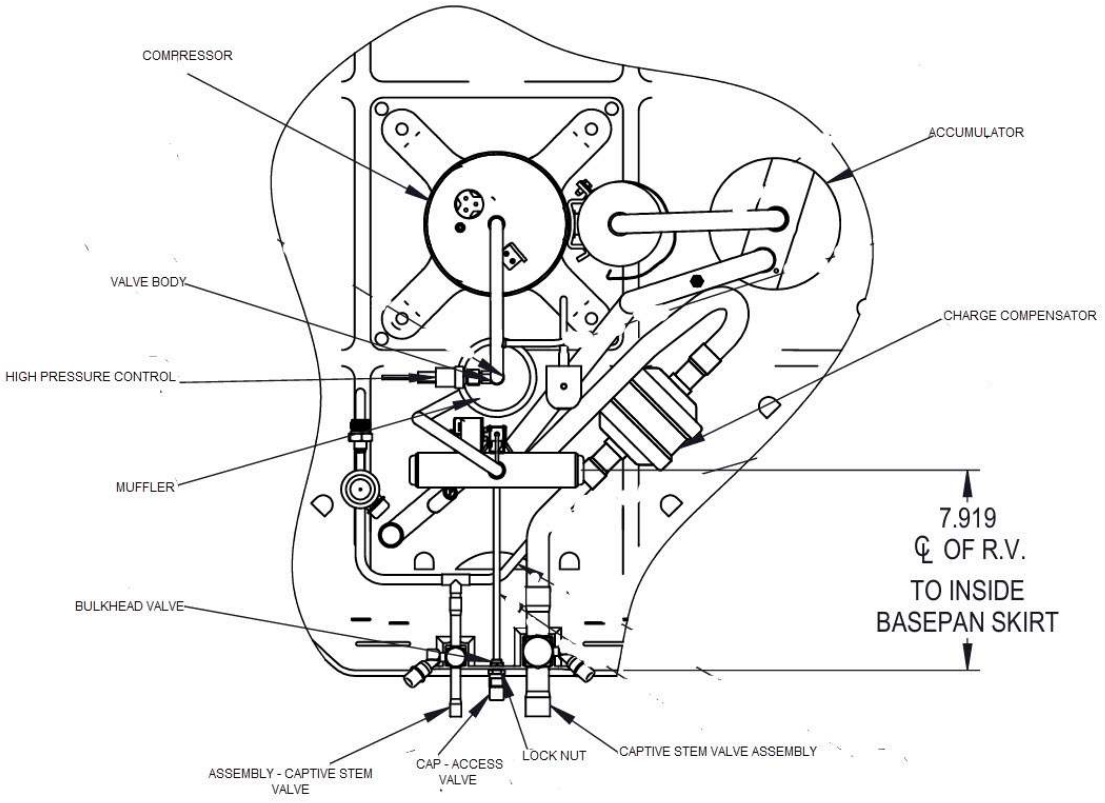

RP17AY48 - GMCC

RP17AY parts breakdown: COMPRESSOR ASSY 28- 29P17AY48 - HIGHLY

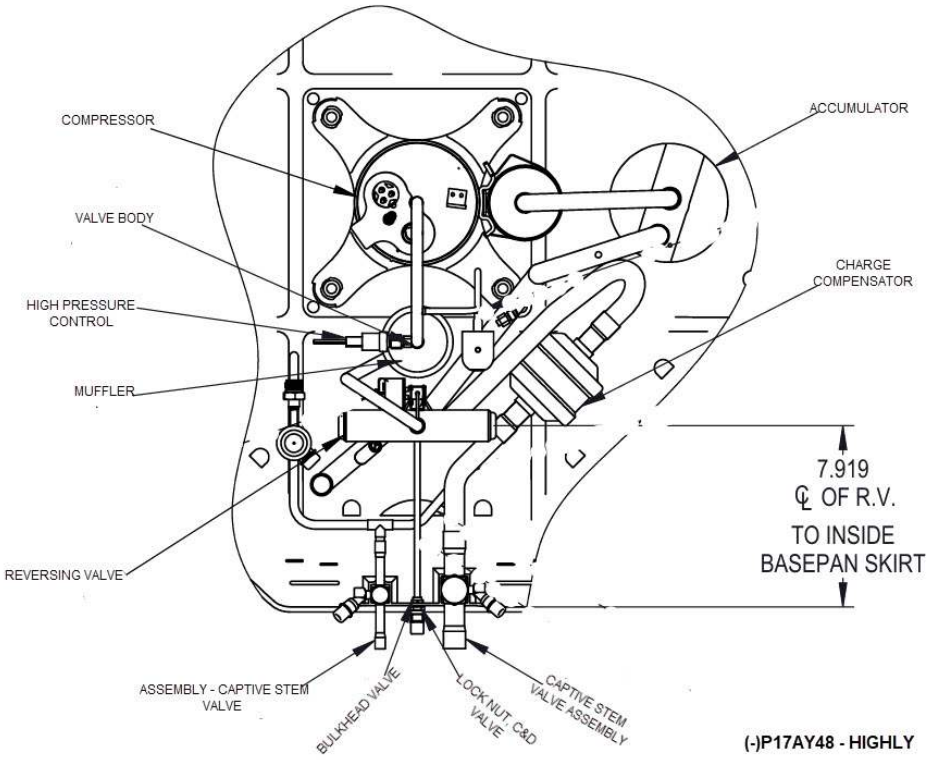

RP17AY parts breakdown: COMPRESSOR ASSY 28- 29P17AY48 - HIGHLY-1

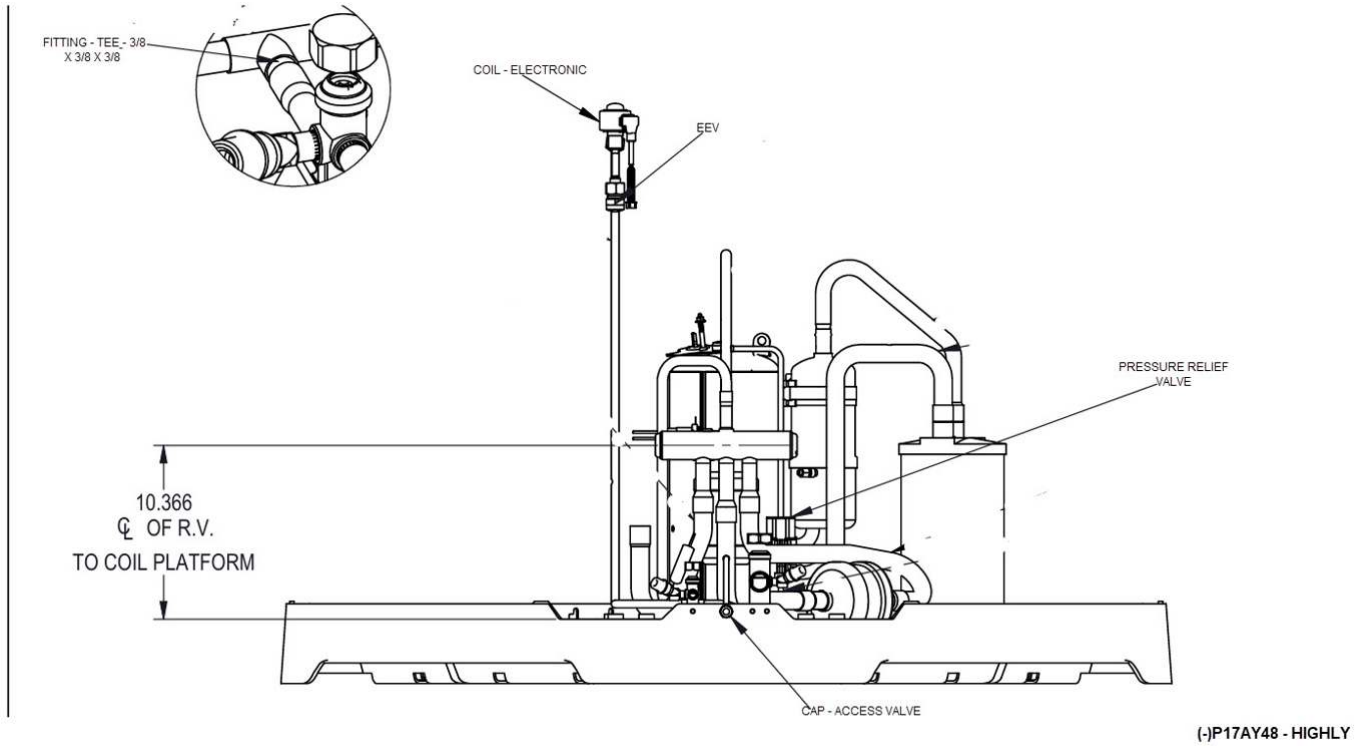

RP17AY parts breakdown: COMPRESSOR ASSY- 28- 29P17AY60 - GMCC

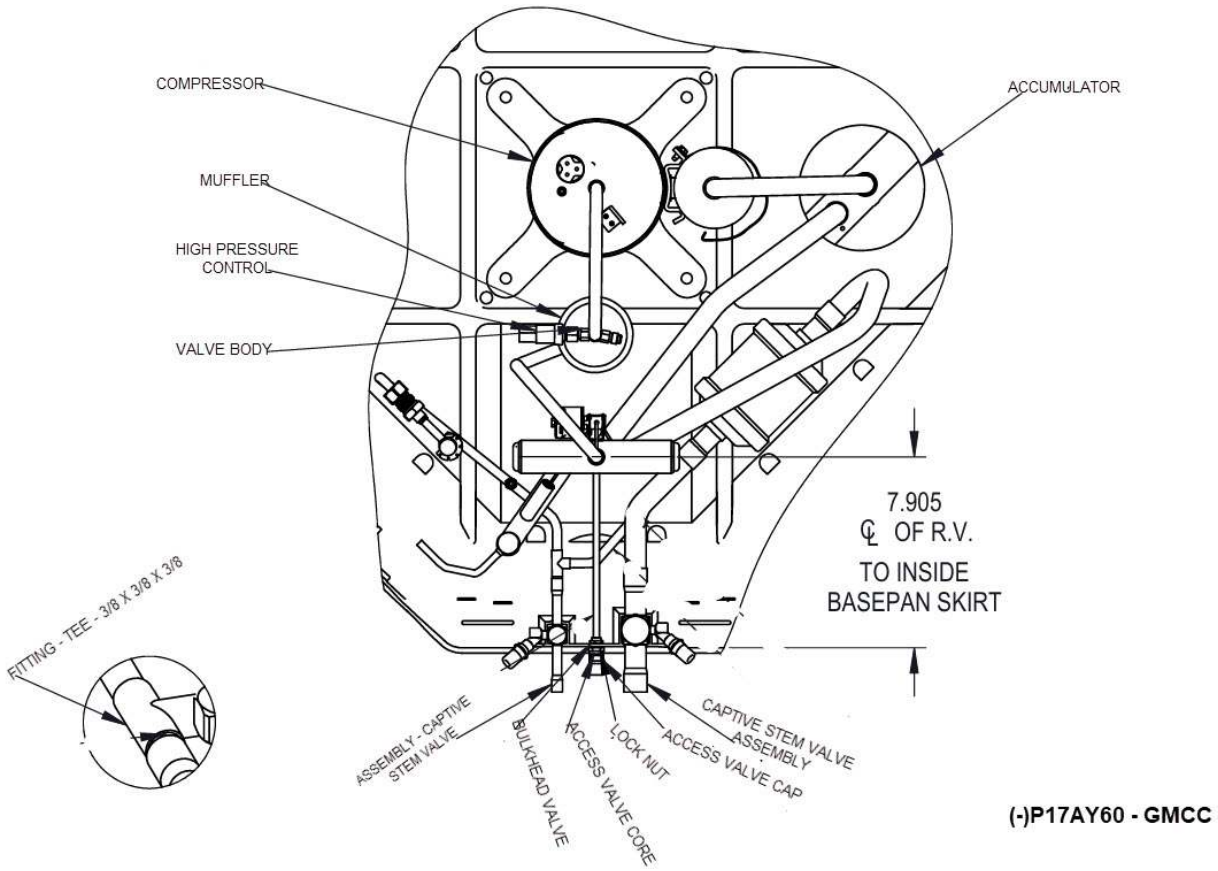

RP17AY parts breakdown: COMPRESSOR ASSY- 28- 29P17AY60 - GMCC

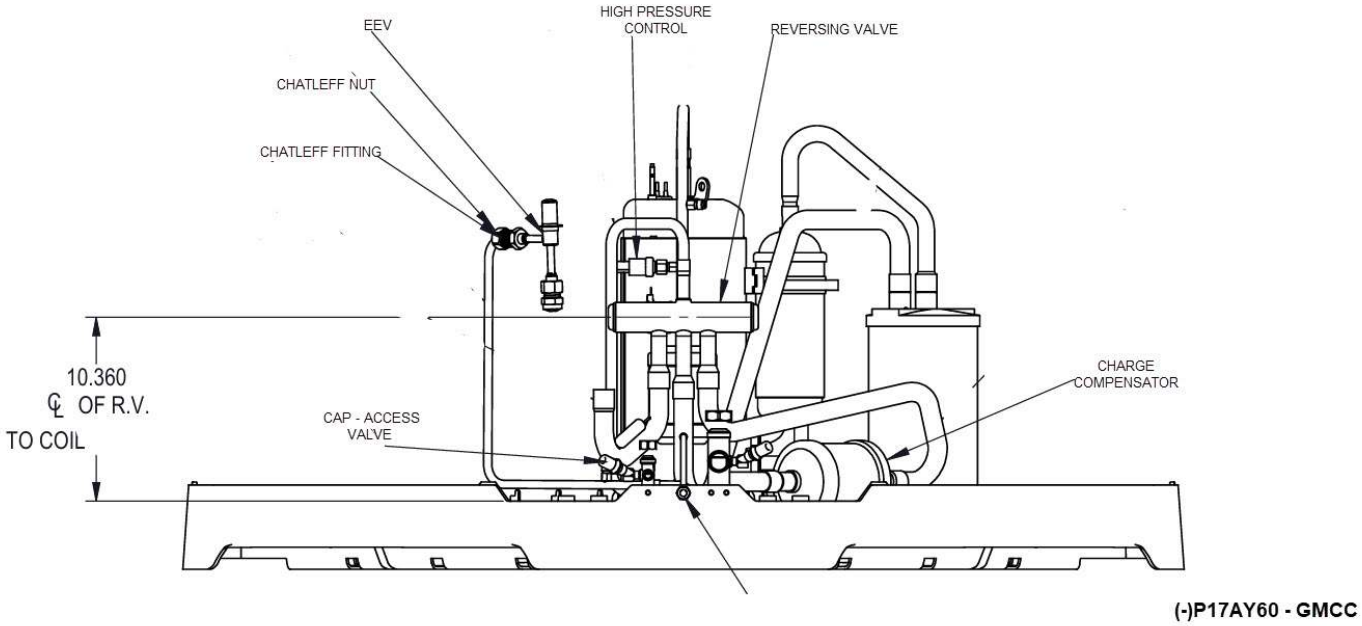

Compressor

Part No.	Description	Qty	Replaced By	Fits Models
55-108661-22S	Compressor	1		RP17AY48AJVCA
55-110053-09	Compressor	1		RP17AY36AJVCA
55-110853-01S	Compressor	1		RP17AY24AJVCA
55-110853-03	Compressor	1		RP17AY60AJVCA
63-20072-07	Compressor Bolt	1		RP17AY24AJVCA, RP17AY36AJVCA, RP17AY48AJVCA
63-20072-18	Compressor Bolt	1		RP17AY60AJVCA
63-24110-03	Compressor Nut Flange Lock M5X0 8 in.	1		All models
45-108341-08	Compressor Plug - GMCC	1		RP17AY60AJVCA
45-108341-09	Compressor Plug - GMCC	1		RP17AY36AJVCA
45-108341-10	Compressor Plug - Highly	1		RP17AY48AJVCA
68-23427-85	Compressor Sound Enclosure Top 2/3 Ton	1		RP17AY24AJVCA, RP17AY36AJVCA
68-23427-86	Compressor Sound Enclosure Top 4/5 Ton	1		RP17AY48AJVCA, RP17AY60AJVCA
68-109261-01	Gasket - Rotary Compressor	1		All models
56-18518-25	Mounting Compressor Grommet - Rotary 2/3 Ton	1		RP17AY36AJVCA
56-18518-24	Mounting Compressor Grommet - Rotary 4/5 Ton	1		RP17AY60AJVCA
56-18518-19	Mounting Grommet - Compressor	1		RP17AY24AJVCA
56-18518-22	Mounting Grommet - Compressor	1		RP17AY24AJVCA
56-18518-23	Mounting Grommet - Compressor	1		RP17AY48AJVCA
83-110921-01	Muffler	1		RP17AY36AJVCA, RP17AY48AJVCA, RP17AY60AJVCA
83-104416-01K	Muffler Kit	1		RP17AY24AJVCA

Motors & fans

Part No.	Description	Qty	Replaced By	Fits Models
70-109087-01	Fan Blade	1		RP17AY24AJVCA
70-109210-04	Fan Blade	1		RP17AY60AJVCA
70-109087-07	Fan Blade - 24 inch. - 24 Pitch	1		RP17AY36AJVCA, RP17AY48AJVCA
51-110857-01	Motor - Broad Ocean	1		RP17AY60AJVCA
51-110857-02	Motor - Broad Ocean	1		RP17AY36AJVCA, RP17AY48AJVCA
51-110857-06	Motor - Broad Ocean - 1/4 hp - 310V DC	1		RP17AY24AJVCA

Electrical

Part No.	Description	Qty	Replaced By	Fits Models
47-102709-10	Ambient Sensor - 32 in.	1		All models
47-108464-08	Control Board - Universal Variable Speed (SV 55)	1		All models
47-102710-42	Discharge Sensor	1		All models
45-19000-05	Double Grounding Lug	1		All models
47-110534-01K	Inverter Megmeet - 5kW	1		RP17AY24AJVCA, RP17AY36AJVCA
47-110534-02K	Inverter Megmeet - 6kW	1		RP17AY48AJVCA, RP17AY60AJVCA
47-103454-07	Sensor - Transducer - Liquid Pressure	1		All models
47-103454-06	Sensor - Transducer - Suction Pressure	1		All models
47-108211-07	Sensor/Clip Assembly	1		RP17AY24AJVCA
47-108211-08	Sensor/Clip Assembly	1		RP17AY36AJVCA
47-108211-09	Sensor/Clip Assembly	1		RP17AY48AJVCA, RP17AY60AJVCA
45-19382-04	Terminal Block	1		All models
47-102710-32	Thermistor Assembly	1		All models
45-104991-09	Wire Assembly - Input Power to Inverter	1		All models
45-104991-11	Wire Harness - Control Board Drive	1		All models
45-108341-11	Wire Harness Control Board - Drive	1		RP17AY24AJVCA

Part No.	Description	Qty	Replaced By	Fits Models
61-26149-08	Wiring Harness - Reversing Valve	1		All models

Valves & switches

Part No.	Description	Qty	Replaced By	Fits Models
61-22369-04	Bulkhead Valve	1		All models
61-109028-01	Pressure Relief Solenoid Coil	1		All models
61-109025-01	Pressure Relief Valve	1		All models
61-102498-16	Reversing Valve	1		RP17AY48AJVCA, RP17AY60AJVCA
61-102498-17	Reversing Valve	1		RP17AY36AJVCA
61-102498-15K	Reversing Valve Kit	1		RP17AY24AJVCA
83-CD3608-6PK	Service Valve - Copper Tube (Premium)	1		All models
PD619106	Service Valve Kit	1		RP17AY48AJVCA, RP17AY60AJVCA
PD619104	Service Valve Kit - Liquid Line	1		All models
PD619105	Service Valve Kit - Suction Line	1		RP17AY24AJVCA, RP17AY36AJVCA
61-18551-01	Valve Core	1		All models

Coil & refrigeration

Part No.	Description	Qty	Replaced By	Fits Models
83-104716-02	Accumulator	1		RP17AY48AJVCA, RP17AY60AJVCA
83-22272-93	Accumulator Kit - 79 oz. R-410A cap, 89 oz. R-22 cap, 3/4 in. Solder Fitting	1		RP17AY24AJVCA, RP17AY36AJVCA
AS-110840-03	Bent Coil Assembly - 42 Tube - Medium	1		RP17AY36AJVCA
AS-110920-03	Bent Coil Assembly - 42 Tube - Medium	1		RP17AY48AJVCA
AS-110839-03	Bent Coil Assembly - Copper	1		RP17AY24AJVCA
83-104499-11	Charge Compensator	1		RP17AY60AJVCA
83-104499-13	Charge Compensator	1		RP17AY48AJVCA
83-104499-01K	Charge Compensator Kit	1		RP17AY24AJVCA
AS-109255-02	Circuited Coil Assembly	1		RP17AY36AJVCA, RP17AY48AJVCA
AS-111114-03	Coil - Bent Assembly - Copper	1		RP17AY60AJVCA
82-18419-01	Copper Tee	1		RP17AY24AJVCA, RP17AY48AJVCA, RP17AY60AJVCA
61-110045-10V	EEV (Electronic Expansion Valve)	1		RP17AY60AJVCA
61-103151-14	EEV (Electronic Expansion Valve) - Coil	1		All models
61-110045-11	EEV/Distributor Assembly	1		RP17AY36AJVCA, RP17AY48AJVCA
61-110045-12	EEV/Distributor Assembly	1		RP17AY24AJVCA
83-25152-09	PROTECH Liquid Line Filter Drier (Bi-directional)	1		All models

Cabinet & hardware

Part No.	Description	Qty	Replaced By	Fits Models
83-100635-04	Access Valve Cap	1		All models
AS-104456-02H	Back Panel	1		RP17AY24AJVCA
AS-104456-29H	Back Panel	1		RP17AY36AJVCA, RP17AY48AJVCA
AS-104456-44H	Back Panel	1		RP17AY60AJVCA
68-104457-01	Base Pan	1		RP17AY24AJVCA
68-104457-02	Base Pan	1		RP17AY36AJVCA, RP17AY48AJVCA
68-104457-03	Base Pan	1		RP17AY60AJVCA
AE-104461-19	Bracket Control Box	1		RP17AY36AJVCA, RP17AY48AJVCA, RP17AY60AJVCA
64-101148-06	Cable Tie - Double Loop, 7.6"	1		All models
91-105471-01	Center Cap Nameplate - Blank	1		All models
AS-104459-09H	Center Post	1		RP17AY36AJVCA, RP17AY48AJVCA, RP17AY60AJVCA
AS-104462-02H	Control Box Cover	1		RP17AY36AJVCA, RP17AY48AJVCA, RP17AY60AJVCA

Part No.	Description	Qty	Replaced By	Fits Models
AS-104460-32H	Control Box Panel	1		RP17AY36AJVCA, RP17AY48AJVCA, RP17AY60AJVCA
AS-104469-02H	Corner Post	1		RP17AY24AJVCA
AS-104469-05H	Corner Post	1		RP17AY36AJVCA, RP17AY48AJVCA, RP17AY60AJVCA
AS-104456-43H	Front Panel	1		RP17AY60AJVCA
AS-104456-01H	Front/Right Panel	1		RP17AY24AJVCA
AS-104456-28H	Front/Right Panel	1		RP17AY36AJVCA, RP17AY48AJVCA
63-111146-01	Hardware - Fastener - Screw - Hex Head	2		RP17AY36AJVCA, RP17AY48AJVCA, RP17AY60AJVCA
63-22368-01	Hex Lock Nut, 7/16 x 20	1		All models
47-102290-13	High Pressure Control	1		All models
68-106510-01	Insulation Wrap -1-5/8 I.D. x 1/2 in. Wall Thickness x 4-1/2 in.	1		All models
AS-104456-12H	Left Panel	1		RP17AY24AJVCA
AS-104456-42H	Left Panel	1		RP17AY36AJVCA, RP17AY48AJVCA
AS-104456-56H	Left Panel	1		RP17AY60AJVCA
64-25340-02	Locking Wing Push Mount Tie	1		All models
64-25340-03	Locking Wing Push Mount Tie	1		All models
AS-105215-16H	Panel Assembly	1		RP17AY36AJVCA, RP17AY48AJVCA
AS-105215-18H	Panel Assembly	1		RP17AY60AJVCA
AE-104460-31	Panel Control Box	1		RP17AY24AJVCA
AE-104460-32	Panel Control Box	1		RP17AY36AJVCA, RP17AY48AJVCA, RP17AY60AJVCA
AE-104462-08	Panel Cover - Control Box	1		RP17AY24AJVCA
63-110473-01	Rivnut - Threaded Hex - 5/16in.-18 - Insert	1		RP17AY24AJVCA
63-23206-01	Screw	1		All models
AS-104525-01H	Service Door	1		RP17AY36AJVCA, RP17AY48AJVCA, RP17AY60AJVCA
PD637241	Sheet Metal Screw - 63-105098-05 - 8-18 x 3/8 in. (Pack of 50)	1/4/6		All models
PD637249	Sheet Metal Screw - 63-105098-11 - 8-18 X 3/4 in. (Pack of 50)	1		All models
45-103252-02	Snap-In Bushing - Conductor Protection	1		All models
45-18515-01	Snap-In Bushing - Conductor Protection	1		All models
82-17063-11	Tapered Plug	1		RP17AY24AJVCA, RP17AY36AJVCA
82-17063-01	Tapered Polyethylene Plug	1		All models
64-107317-01	Thermistor Spring	1		All models
63-22487-01	Thread-Forming Screw, 10-32 x 1/2 in.	1		All models
63-100404-02	Thread-Forming Screw, 12-24 x 7/16 in.	1		All models
45-22940-01	Tinnerman Clip	1	OBSOLETE	All models
AS-104458-01H	Top Panel	1		RP17AY24AJVCA
AS-104458-02H	Top Panel	1		RP17AY36AJVCA, RP17AY48AJVCA
AS-104458-03H	Top Panel	1		RP17AY60AJVCA
68-104464-02	Venturi	1		RP17AY24AJVCA
68-104464-06	Venturi	1		RP17AY36AJVCA, RP17AY48AJVCA
68-104464-07	Venturi	1		RP17AY60AJVCA
64-17606-04	Wire & Cable Tie - Nylon Black - 11-1/2 in.	1		All models
64-101148-04	Wire & Cable Tie - Nylon Black - 21 in.	1		All models
64-17606-01	Wire & Cable Tie - Nylon Black - 8 in.	1		All models
95-104620-01	Wire Grille	1		RP17AY24AJVCA
95-104620-02	Wire Grille	1		RP17AY36AJVCA, RP17AY48AJVCA
95-104620-03	Wire Grille	1		RP17AY60AJVCA