Rheem RP19AY Heat Pump Replacement Parts List

Parts list RP-RHM-RP19AY | Updated Nov 2026 | 107 parts | 12 model numbers

Genuine Rheem OEM part numbers for the models listed below, compiled from Rheem Manufacturing's service parts catalog. Quantities are per unit. Where Rheem has replaced a part number, the current number is shown under Replaced By. Always confirm the full model and serial number of the unit before ordering.

Models covered

RP19AY24A, RP19AY24AJVCA, RP19AY24AJVCARHC, RP19AY36A, RP19AY36AJVCA, RP19AY36AJVCARHC, RP19AY48A, RP19AY48AJVCA, RP19AY48AJVCARHC, RP19AY60A, RP19AY60AJVCA, RP19AY60AJVCARHC

RP19AY parts breakdown: ADS-105116-09 ADS-105116-14 1 Exploded View

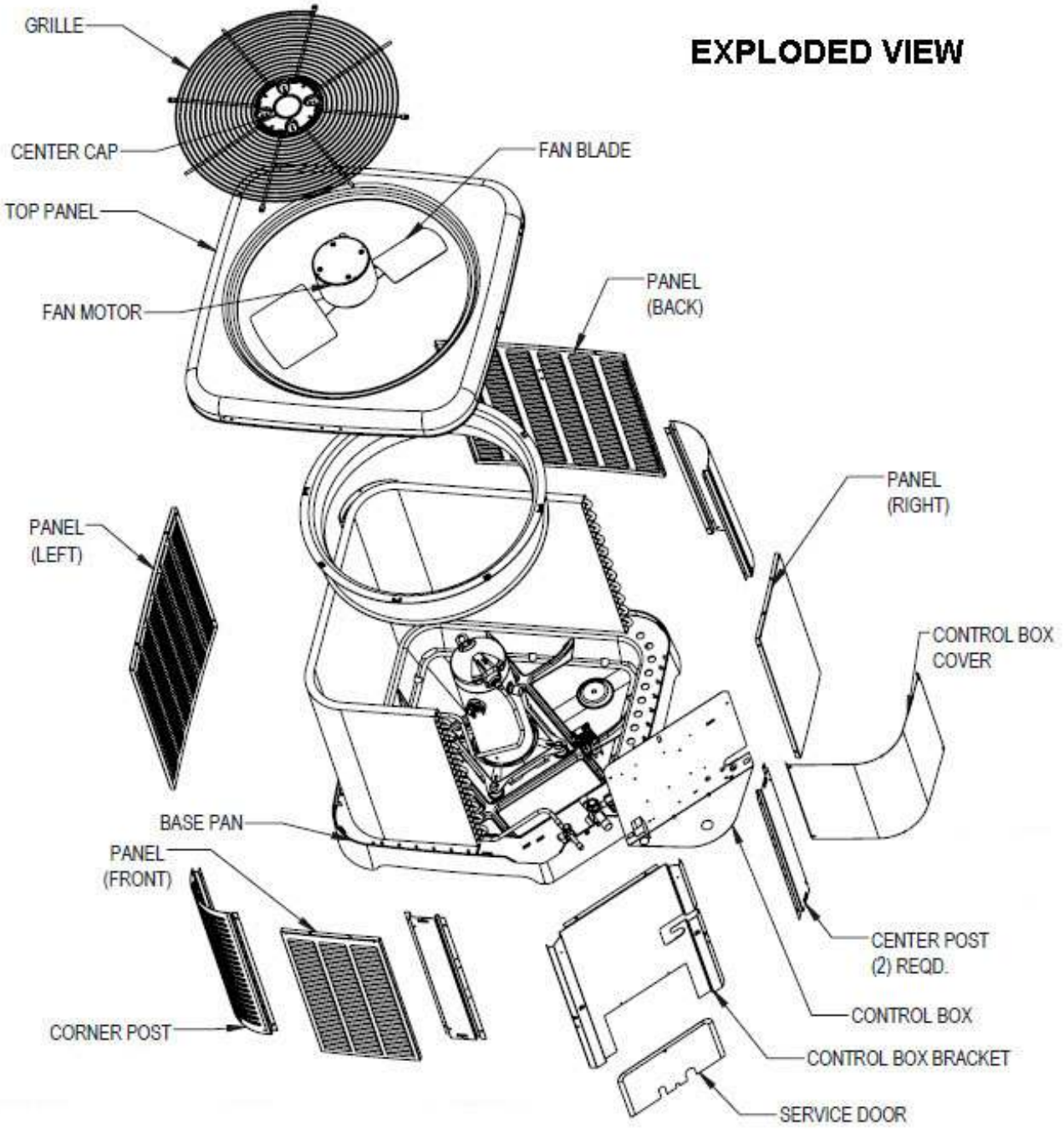

RP19AY parts breakdown: ADS-105116-09 ADS-105116-14 3 Compressor

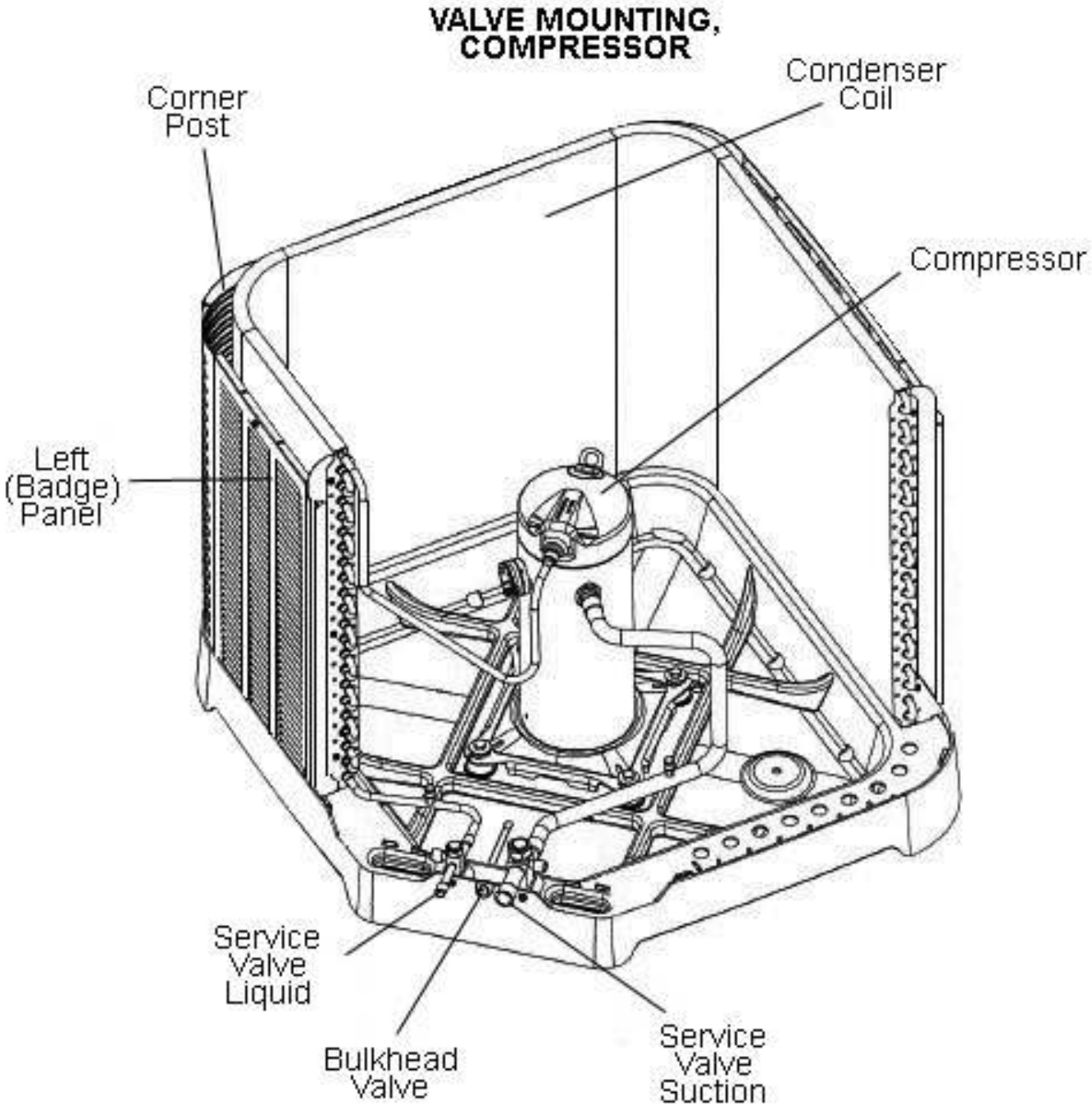

RP19AY parts breakdown: ADS-105116-09 ADS-105116-14 4 Valve Mounting

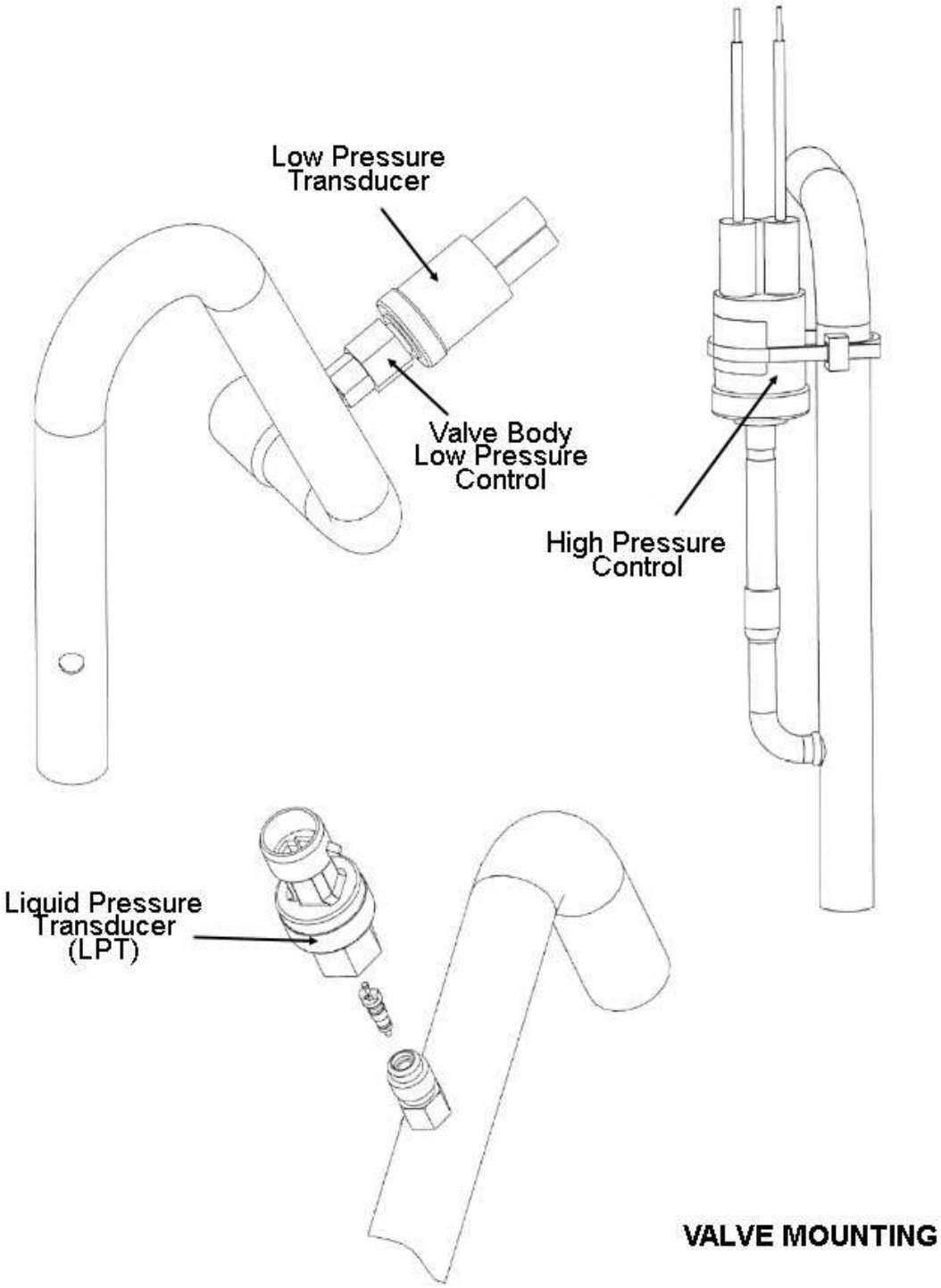

RP19AY parts breakdown: ADS-105116-09 ADS-105116-14 5 Reversing Valve 2C Compressor - Top

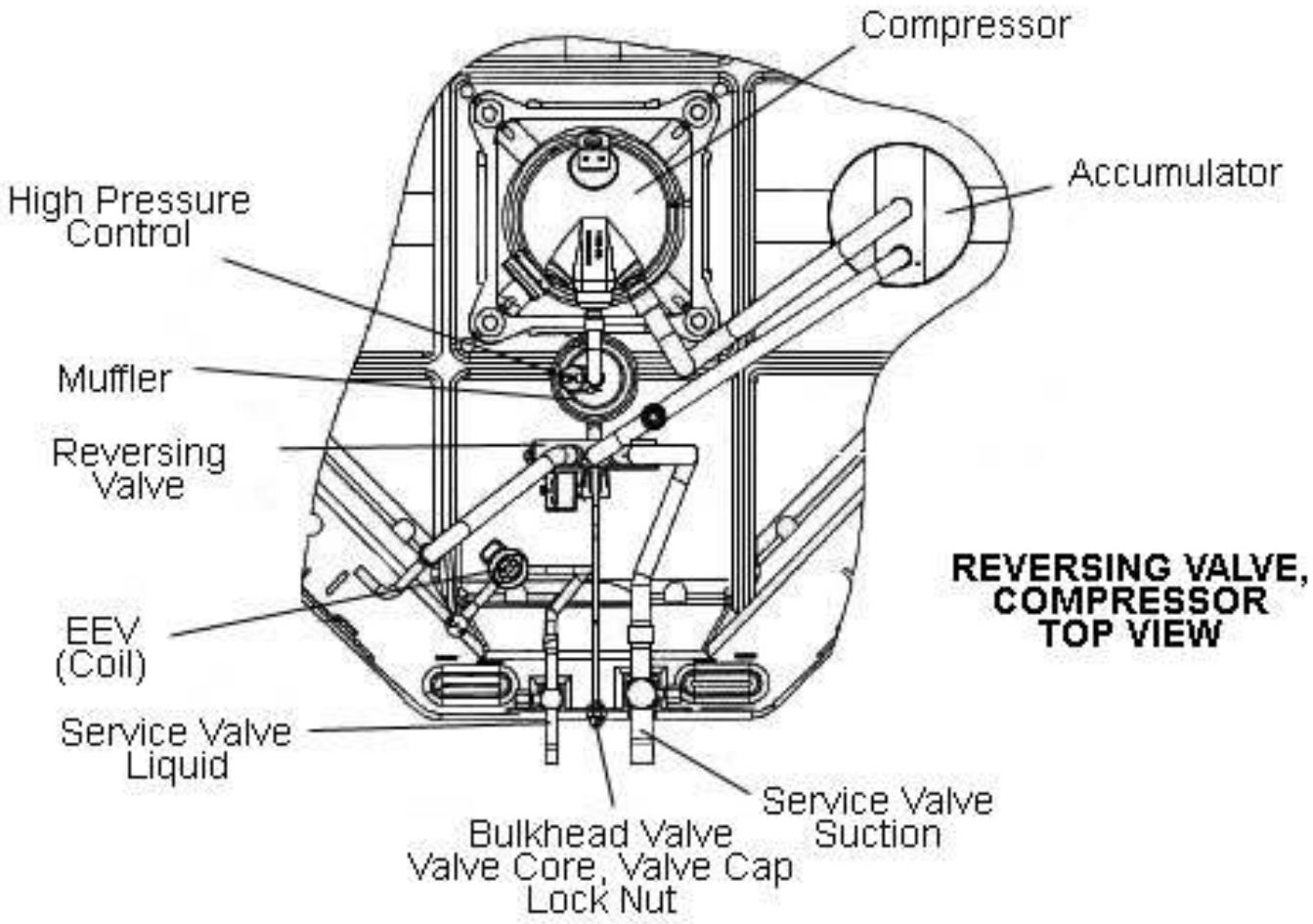

RP19AY parts breakdown: ADS-105116-09 ADS-105116-14 6 Reversing Valve 2C Compressor - Side

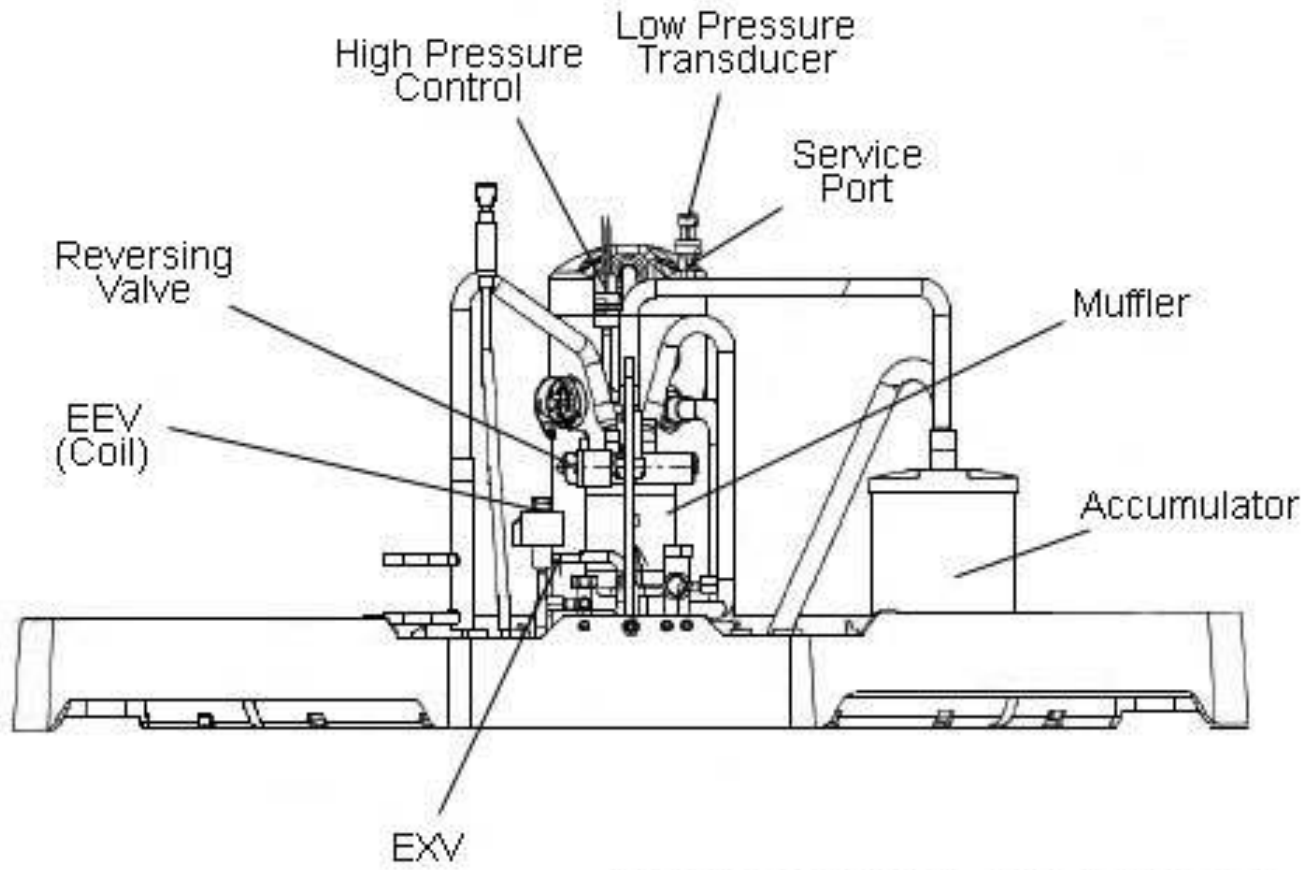

REVERSING VALVE, COMPRESSOR SIDE VIEW

RP19AY parts breakdown: ADS-105116-09 ADS-105116-14 7 Charge Compensator 2C B-Series

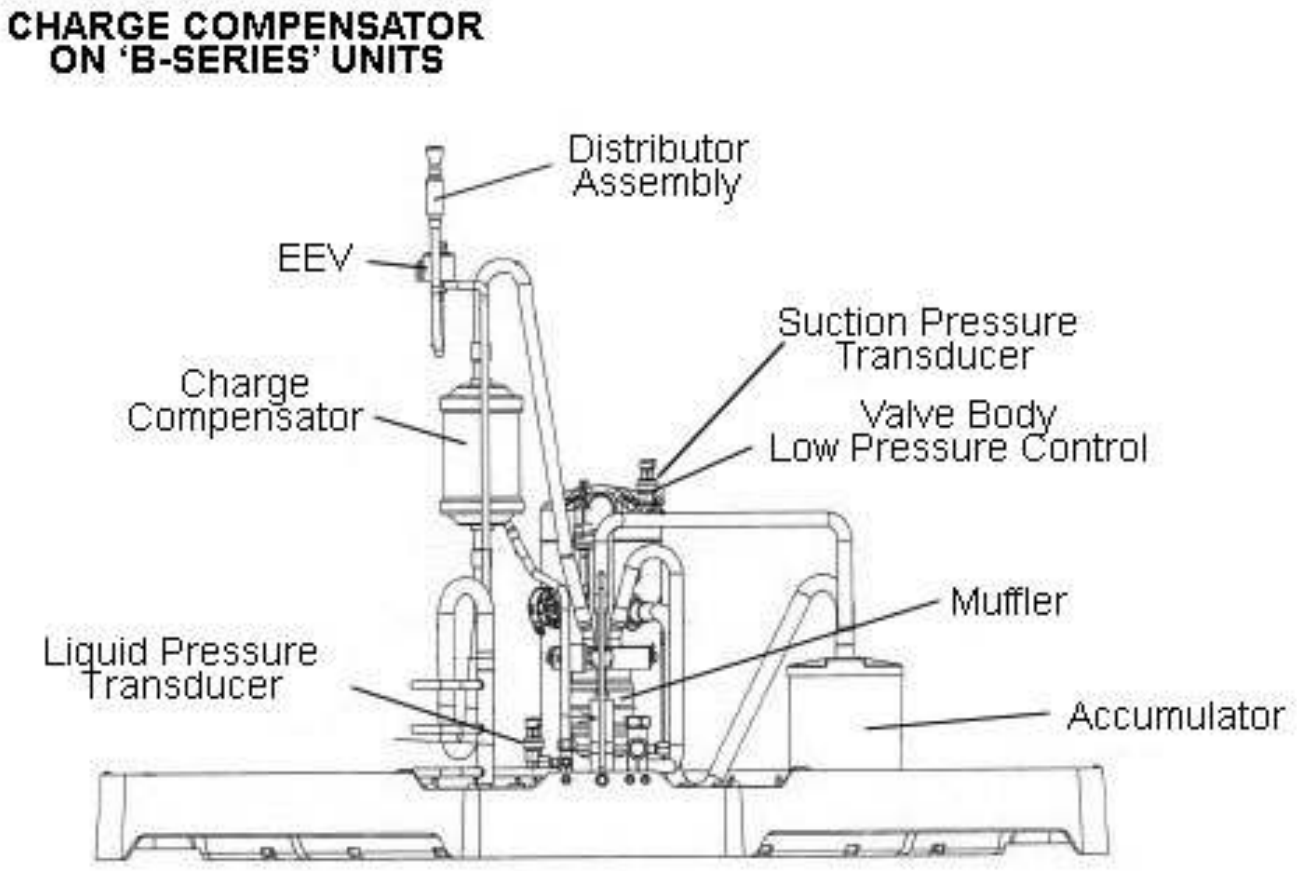

RP19AY parts breakdown: Exploded View

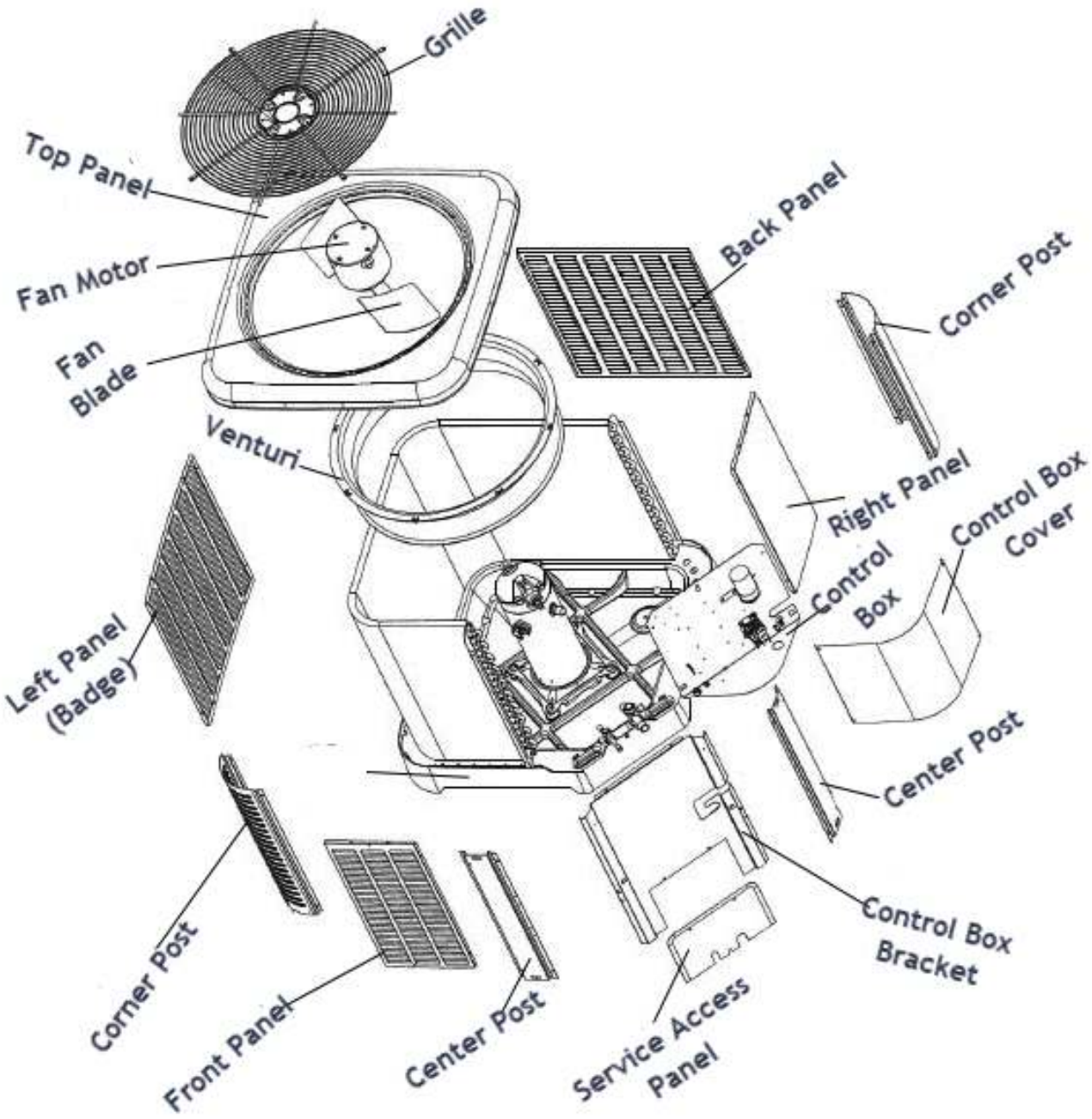

RP19AY parts breakdown: Control Box

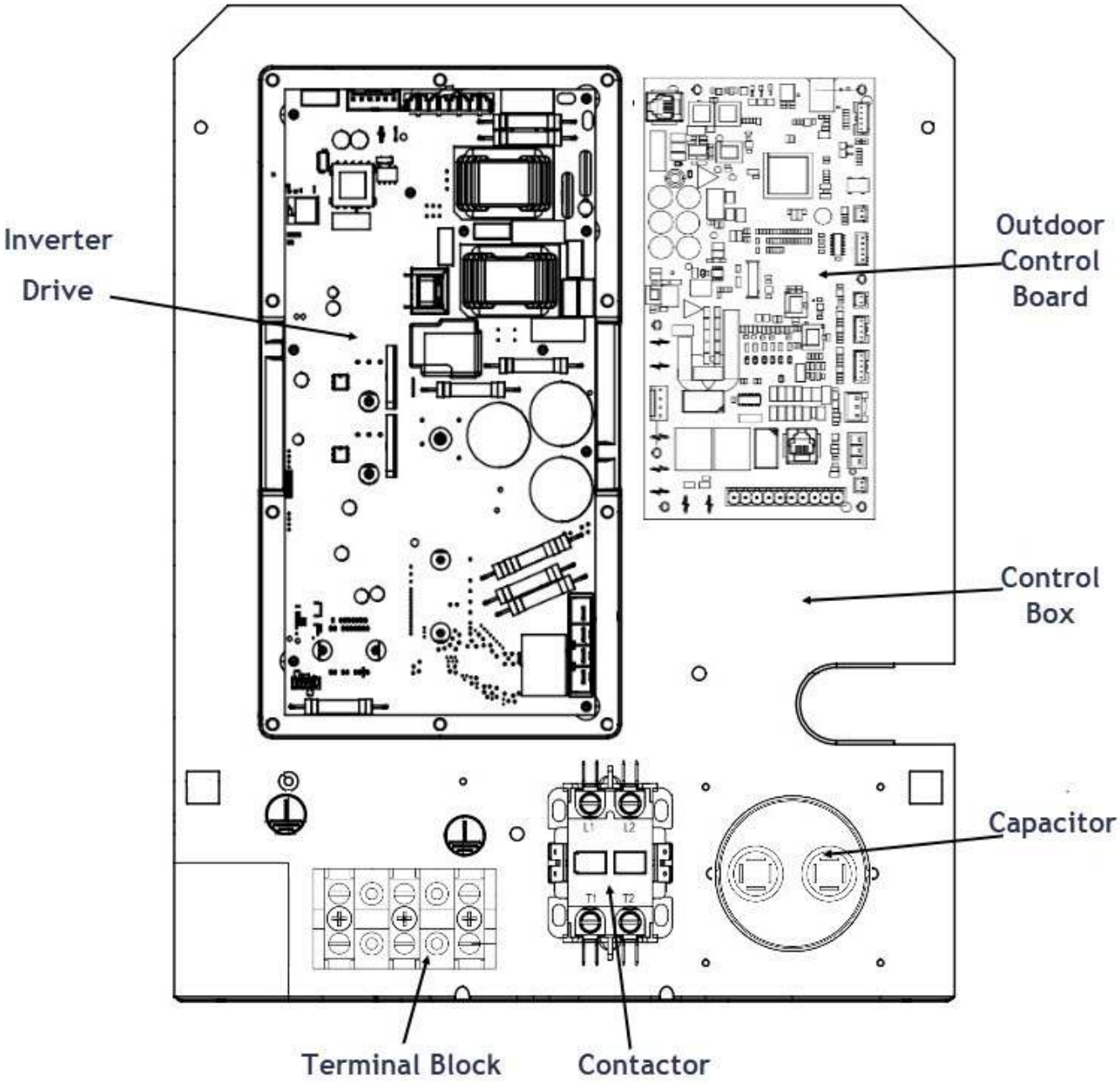

RP19AY parts breakdown: Valve Mounting Compressor

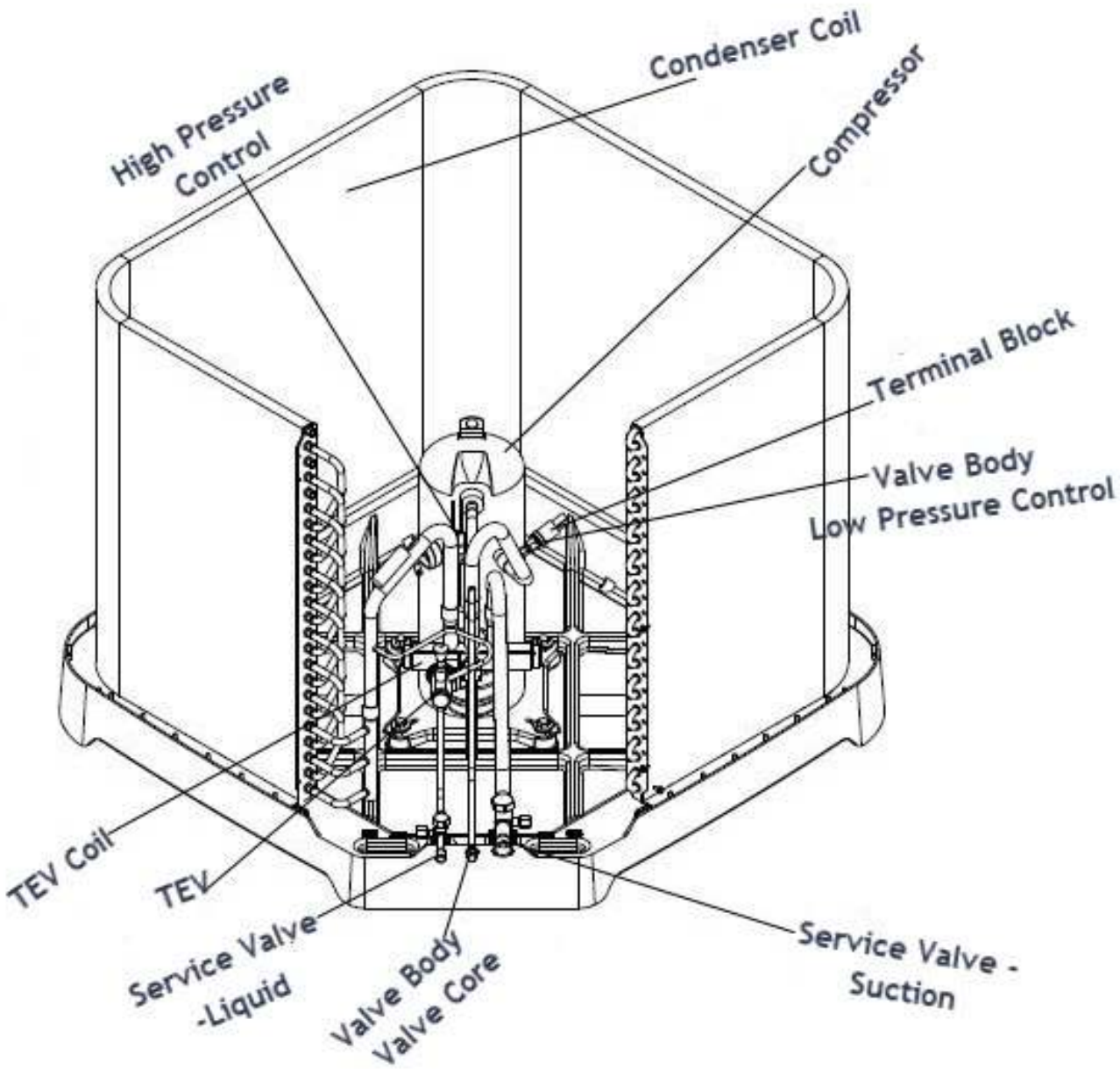

Compressor

Part No.	Description	Qty	Replaced By	Fits Models
55-109517-37	Compressor	1		RP19AY24AJVCA (incl. variants)
55-109517-38	Compressor	1		RP19AY36AJVCA (incl. variants)
55-109517-39	Compressor	1		RP19AY48AJVCA (incl. variants)
55-109517-40	Compressor	1		RP19AY60AJVCA (incl. variants)
63-20072-07	Compressor Bolt	1		All models
68-23427-24	Compressor Sound Enclosure	1		All models
45-100834-13	Copeland Molded Plug Wiring Harness - with Ferrite Ring	1		All models
56-18518-19	Mounting Grommet - Compressor	1		All models
83-110921-01	Muffler	1		All models
82-104984-85	Suction Tube - Compressor to Accumulator	1		RP19AY36AJVCA (incl. variants)

Motors & fans

Part No.	Description	Qty	Replaced By	Fits Models
70-102345-15	Fan Blade	1		All models
51-108504-01	Fan Motor - 1/2 hp (Requires Bluetooth programming, see below under “Documents”)	1		RP19AY36AJVCA, RP19AY48AJVCA, RP19AY60AJVCA (incl. variants)
51-108350-01	Motor - Broad Ocean - 1/3 hp (Requires Bluetooth programming, see below under “Documents”)	1		RP19AY24AJVCA (incl. variants)

Electrical

Part No.	Description	Qty	Replaced By	Fits Models
47-102709-10	Ambient Sensor - 32 in.	1		All models
47-108464-08	Control Board - Universal Variable Speed (SV 55)	1		All models
47-102710-39	Discharge Line Thermistor	1		All models
45-19000-05	Double Grounding Lug	1		All models
47-109017-01	Power Inverter - 4.2 kW	1		RP19AY24AJVCA (incl. variants)
47-109017-02	Power Inverter - 7.1 kW	1		RP19AY36AJVCA, RP19AY48AJVCA, RP19AY60AJVCA (incl. variants)
47-103454-01K	Pressure Transducer Kit	1		All models
47-103454-05K	Pressure Transducer Kit - Suction (SPT)	1		All models
47-108211-01K	Sensor/Clip Assembly Kit	1		RP19AY24AJVCA (incl. variants)
47-108211-03	Suction line Thermistor	1		RP19AY48AJVCA, RP19AY60AJVCA (incl. variants)
45-19382-04	Terminal Block	1		All models
47-102710-32	Thermistor Assembly	1		All models
47-108211-02	Thermistor/Clip Assembly - 2 Sensors (Coil Sensor)	1		RP19AY36AJVCA (incl. variants)
45-104991-09	Wire Assembly - Input Power to Inverter	1		RP19AY36AJVCA, RP19AY48AJVCA, RP19AY60AJVCA (incl. variants)
45-104991-10	Wire Assembly - Input Power to Inverter	1		RP19AY24AJVCA (incl. variants)
45-104130-05	Wire Harness - Pressure Transducer, Liquid	1		All models
45-104130-03	Wire Harness - Pressure Transducer, Suction	1		All models
45-108875-01	Wire Harness Assembly	1		All models
45-104991-08	Wire Harness Assembly - Modbus	1		All models
61-26149-08	Wiring Harness - Reversing Valve	1		All models

Valves & switches

Part No.	Description	Qty	Replaced By	Fits Models
61-22369-04	Bulkhead Valve	1		All models
61-102498-04	Reversing Valve	1		RP19AY24AJVCA (incl. variants)
61-102498-06	Reversing Valve	1		RP19AY48AJVCA, RP19AY60AJVCA (incl. variants)
61-102498-09K	Reversing Valve Kit	1		RP19AY36AJVCA (incl. variants)

Part No.	Description	Qty	Replaced By	Fits Models
83-CD3608-6PK	Service Valve - Copper Tube (Premium)	1		All models
PD619106	Service Valve Kit	1		RP19AY48AJVCA, RP19AY60AJVCA (incl. variants)
PD619104	Service Valve Kit - Liquid Line	1		All models
PD619105	Service Valve Kit - Suction Line	1		RP19AY24AJVCA, RP19AY36AJVCA (incl. variants)
61-18551-01	Valve Core	1		All models

Coil & refrigeration

Part No.	Description	Qty	Replaced By	Fits Models
83-104716-02	Accumulator	1		RP19AY36AJVCA, RP19AY48AJVCA, RP19AY60AJVCA (incl. variants)
83-22272-93	Accumulator Kit - 79 oz. R-410A cap, 89 oz. R-22 cap, 3/4 in. Solder Fitting	1		RP19AY24AJVCA (incl. variants)
83-104499-02	Charge Compensator	1		RP19AY48AJVCA (incl. variants)
83-104499-05	Charge Compensator	1		RP19AY60AJVCA (incl. variants)
83-104499-06	Charge Compensator	1		RP19AY24AJVCA, RP19AY36AJVCA (incl. variants)
AS-105848-03	Condenser Coil	1		RP19AY36AJVCA, RP19AY48AJVCA (incl. variants)
AS-106256-03	Condenser Coil	1		RP19AY60AJVCA (incl. variants)
AS-106743-03	Condenser Coil	1		RP19AY24AJVCA (incl. variants)
82-18419-01	Copper Tee	1		All models
AE-77999-01	Crossover Tube	7		RP19AY36AJVCA, RP19AY48AJVCA (incl. variants)
61-103151-14	EEV (Electronic Expansion Valve) - Coil	1		All models
61-110045-01	EEV/Distributor Assembly	1		RP19AY24AJVCA (incl. variants)
61-110045-02	EEV/Distributor Assembly	1		RP19AY36AJVCA, RP19AY48AJVCA (incl. variants)
61-110045-03	EEV/Distributor Assembly	1		RP19AY60AJVCA (incl. variants)
83-25152-09	PROTECH Liquid Line Filter Drier (Bi-directional)	1		All models

Cabinet & hardware

Part No.	Description	Qty	Replaced By	Fits Models
83-100635-04	Access Valve Cap	1		All models
AS-104456-47H	Back Panel	1		RP19AY24AJVCA (incl. variants)
AS-104456-49H	Back Panel	1		RP19AY36AJVCA, RP19AY48AJVCA, RP19AY60AJVCA (incl. variants)
91-104924-02	Badge Assembly - Rheem	1		All models
91-109283-10	Badging - Nameplate - Rheem Prestige Series	1		All models
68-104457-03	Base Pan	1		All models
64-101148-06	Cable Tie - Double Loop, 7.6"	1		All models
91-106416-23	Center Cap Nameplate - Rheem Prestige	1		All models
AS-104459-11H	Center Post	1		RP19AY24AJVCA (incl. variants)
AS-104459-13H	Center Post	1		RP19AY36AJVCA, RP19AY48AJVCA, RP19AY60AJVCA (incl. variants)
AE-104542-07	Coil Air Stop - Left	1		RP19AY36AJVCA, RP19AY48AJVCA, RP19AY60AJVCA (incl. variants)
AE-104543-07	Coil Air Stop - Right	1		RP19AY36AJVCA, RP19AY48AJVCA, RP19AY60AJVCA (incl. variants)
AE-104461-14	Control Box	1		RP19AY24AJVCA (incl. variants)
AE-104461-15	Control Box	1		RP19AY36AJVCA, RP19AY48AJVCA, RP19AY60AJVCA (incl. variants)
AS-104460-09H	Control Box Bracket	1		RP19AY24AJVCA (incl. variants)
AS-104460-10H	Control Box Bracket	1		RP19AY36AJVCA, RP19AY48AJVCA, RP19AY60AJVCA (incl. variants)
AS-104462-02H	Control Box Cover	1		All models
AS-104469-06H	Corner Post	1		RP19AY24AJVCA (incl. variants)
AS-104469-07H	Corner Post	1		RP19AY36AJVCA, RP19AY48AJVCA, RP19AY60AJVCA (incl. variants)
68-100930-11	Flexible Conduit - 12.207 in.	1		All models

Part No.	Description	Qty	Replaced By	Fits Models
AS-104456-46H	Front/Right Panel	1		RP19AY24AJVCA (incl. variants)
AS-104456-50H	Front/Right Panel	1		RP19AY36AJVCA, RP19AY48AJVCA, RP19AY60AJVCA (incl. variants)
63-111146-01	Hardware - Fastener - Screw - Hex Head	1		All models
63-22368-01	Hex Lock Nut, 7/16 x 20	1		All models
47-102290-13	High Pressure Control	1		All models
68-106510-01	Insulation Wrap -1-5/8 I.D. x 1/2 in. Wall Thickness x 4-1/2 in.	1		All models
AS-104456-57H	Left Panel	1		RP19AY24AJVCA (incl. variants)
AS-104456-58H	Left Panel	1		RP19AY36AJVCA, RP19AY48AJVCA, RP19AY60AJVCA (incl. variants)
64-25340-02	Locking Wing Push Mount Tie	1		All models
64-25340-03	Locking Wing Push Mount Tie	1		All models
AS-105215-21H	Panel Assembly	1		RP19AY24AJVCA (incl. variants)
AS-105215-23H	Panel Assembly	1		RP19AY36AJVCA, RP19AY48AJVCA, RP19AY60AJVCA (incl. variants)
63-23206-01	Screw	1		All models
63-22153-11	Screws - Sheet Metal. 8-18 x 3/4 in.	1		All models
AS-104525-01H	Service Door	1		All models
PD637241	Sheet Metal Screw - 63-105098-05 - 8-18 x 3/8 in. (Pack of 50)	5		All models
PD637249	Sheet Metal Screw - 63-105098-11 - 8-18 X 3/4 in. (Pack of 50)	1		All models
45-103252-02	Snap-In Bushing - Conductor Protection	1		All models
45-18515-01	Snap-In Bushing - Conductor Protection	1		All models
82-17063-11	Tapered Plug	1		RP19AY24AJVCA, RP19AY36AJVCA, RP19AY48AJVCA (incl. variants)
82-17063-01	Tapered Polyethylene Plug	1		All models
63-22487-01	Thread-Forming Screw, 10-32 x 1/2 in.	1		All models
63-100404-02	Thread-Forming Screw, 12-24 x 7/16 in.	1		All models
45-22940-01	Tinnerman Clip	1	OBSOLETE	All models
AS-104458-03H	Top Panel	1		All models
68-104464-07	Venturi	1		All models
64-17606-04	Wire & Cable Tie - Nylon Black - 11-1/2 in.	1		All models
64-101148-04	Wire & Cable Tie - Nylon Black - 21 in.	1		All models
64-17606-01	Wire & Cable Tie - Nylon Black - 8 in.	2		All models
95-104620-04	Wire Grille	1		All models