# Rheem WSA14AY Air Conditioner Replacement Parts List

Parts list RP-RHM-WSA14AY | Updated Nov 2026 | 56 parts | 9 model numbers

Genuine Rheem OEM part numbers for the models listed below, compiled from Rheem Manufacturing's service parts catalog. Quantities are per unit. Where Rheem has replaced a part number, the current number is shown under Replaced By. Always confirm the full model and serial number of the unit before ordering.

## Models covered

WSA14AY18A, WSA14AY18AJ1NA, WSA14AY18AJ1NAFGA, WSA14AY24A, WSA14AY24AJ1NA, WSA14AY24AJ1NAFGA, WSA14AY30A, WSA14AY30AJ1NA, WSA14AY30AJ1NAFGA

## WSA14AY parts breakdown: Exploded View Cube Models WJYZ

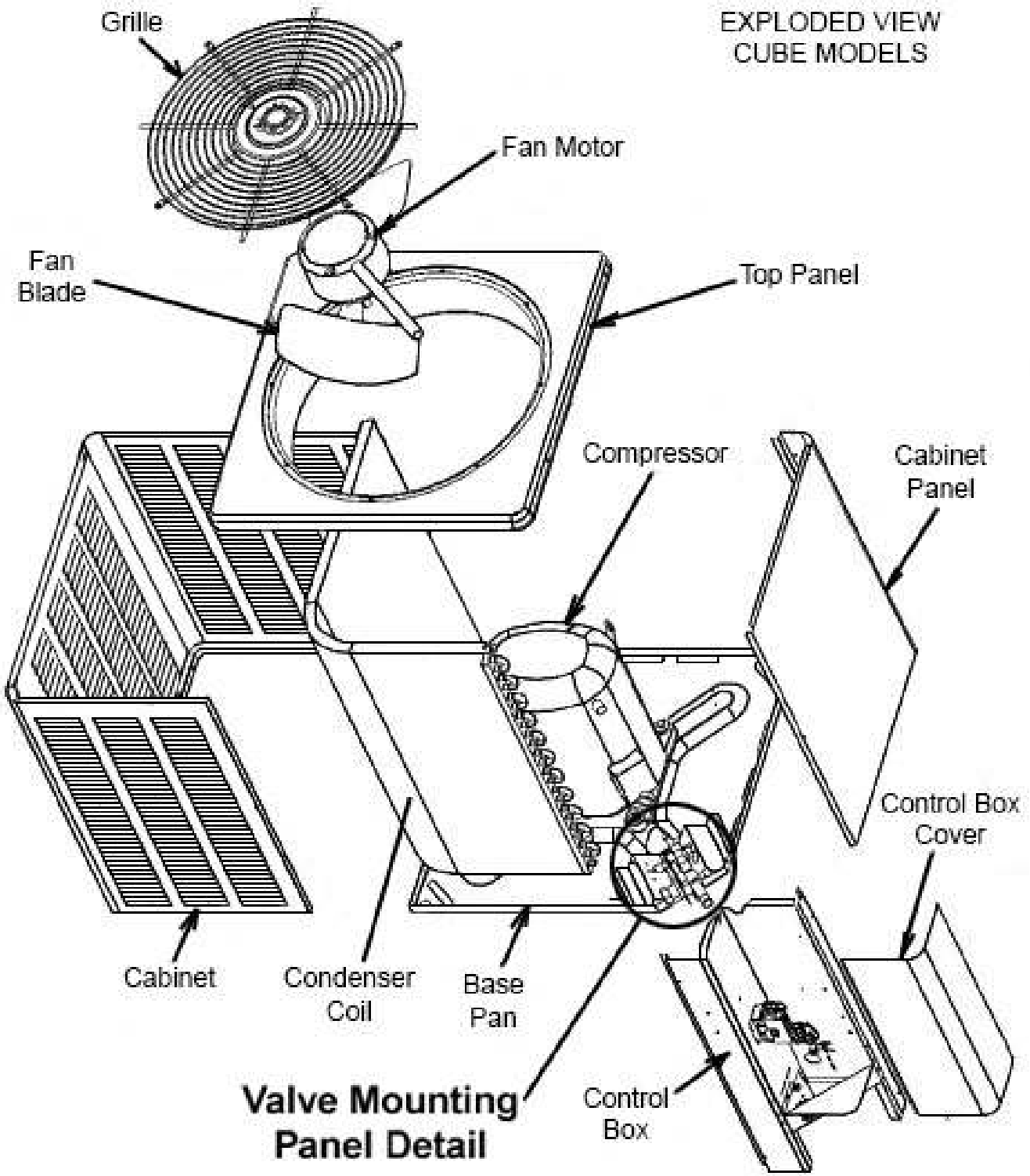

## WSA14AY parts breakdown: Control Box

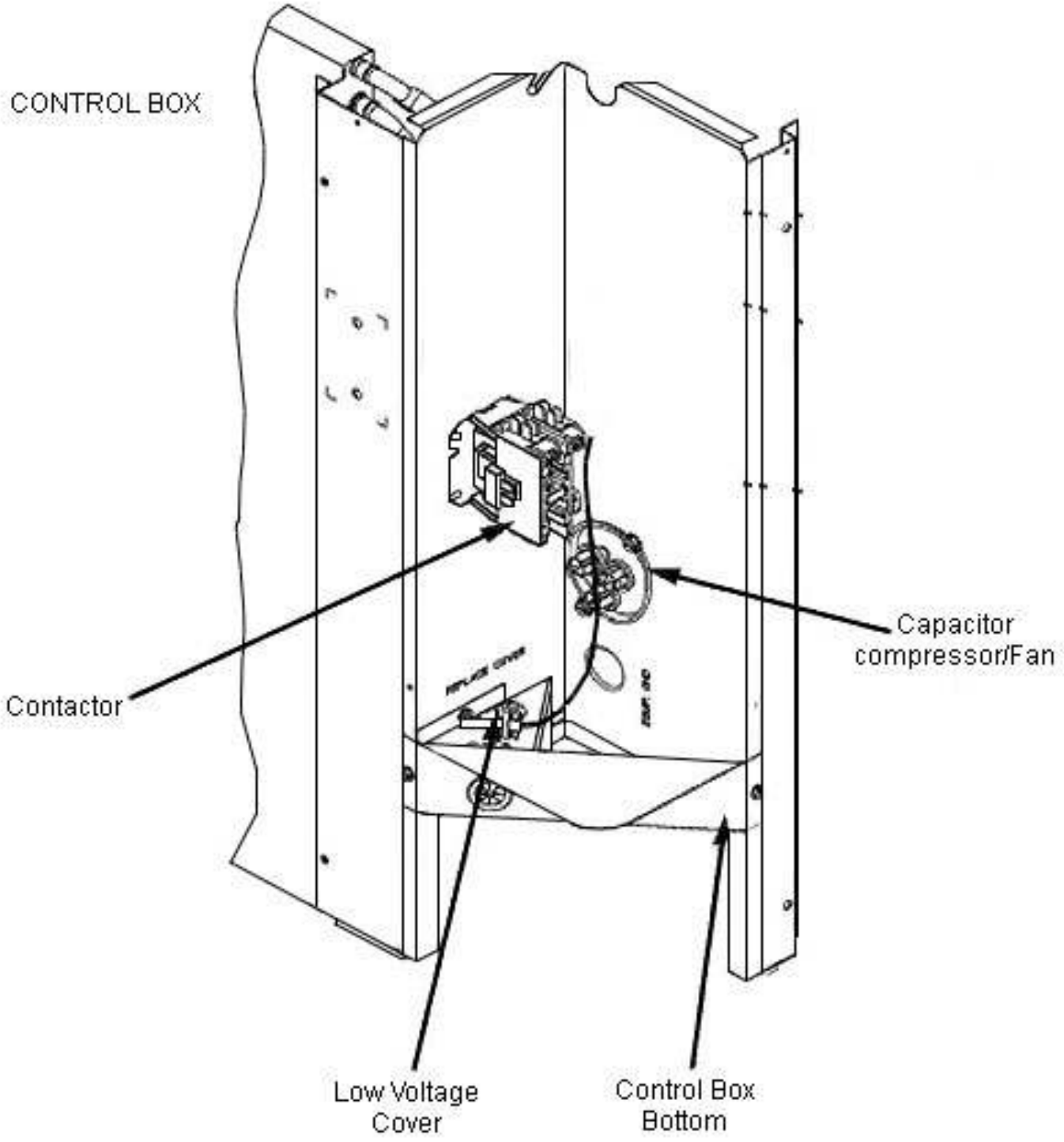

## WSA14AY parts breakdown: Valve Mounting Detail

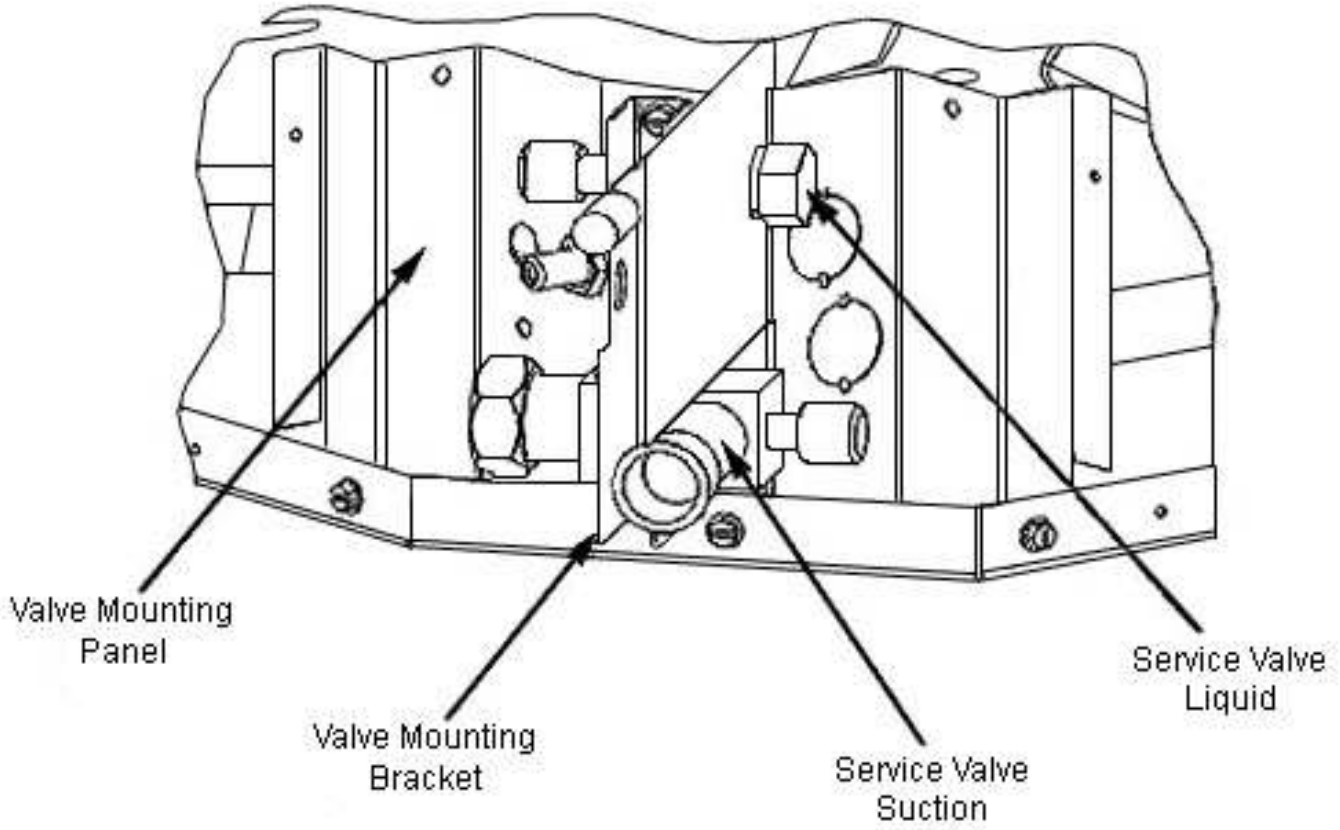


VALVE MOUNTING DETAIL

## Compressor

| Part No. | Description | Qty | Replaced By | Fits Models |
|---|---|---|---|---|
| **55-107225-249** | Compressor - LG | 1 | | WSA14AY30AJ1NAFGA |
| **55-107225-245** | Compressor - YPH014KAA - LG | 1 | | WSA14AY18AJ1NAFGA |
| **55-107225-247** | Compressor - YPH020KAA - LG | 1 | | WSA14AY24AJ1NAFGA |
| **63-20072-03** | Compressor Mounting Screw (1-1/2 in. long) | 1 | | All models |
| **45-107231-02K** | Compressor Plug Assembly Kit - LG | 1 | | All models |
| **56-18518-06** | Mounting Grommet - Compressor | 1 | | All models |

## Motors & fans

| Part No. | Description | Qty | Replaced By | Fits Models |
|---|---|---|---|---|
| **51-102008-18** | Condenser Motor - 1/8 hp 208-230/1/50-60 (1075 rpm/1 speed) | 1 | | WSA14AY18AJ1NAFGA, WSA14AY24AJ1NAFGA |
| **70-101323-59** | Fan Blade | 1 | | WSA14AY30AJ1NAFGA |
| **70-101323-61** | Fan Blade | 1 | | WSA14AY18AJ1NAFGA, WSA14AY24AJ1NAFGA |
| **51-108708-02** | Motor - Broad Ocean 1/7 hp Direct Drive | 1 | | WSA14AY30AJ1NAFGA |

## Electrical

| Part No. | Description | Qty | Replaced By | Fits Models |
|---|---|---|---|---|
| **43-101665-06** | Capacitor - 35/5/440 Dual Round | 1 | | WSA14AY18AJ1NAFGA, WSA14AY24AJ1NAFGA |
| **43-25133-14** | Capacitor - 40/5/440 Dual Round | 1 | | WSA14AY30AJ1NAFGA |
| **42-109499-05K** | Contactor 25A XMC0-251 1P 1PH A2L | 1 | | All models |
| **45-19000-01** | Ground Lug | 1 | | All models |

## Valves & switches

| Part No. | Description | Qty | Replaced By | Fits Models |
|---|---|---|---|---|
| **61-104914-07** | Service Valve - Liquid Line | 1 | | All models |
| **61-104914-06** | Service Valve - Suction Line | 1 | | All models |

## Coil & refrigeration

| Part No. | Description | Qty | Replaced By | Fits Models |
|---|---|---|---|---|
| **AS-109011-03** | Bent Coil Assembly | 1 | | WSA14AY30AJ1NAFGA |
| **AS-109016-03** | Condenser Coil | 1 | | WSA14AY18AJ1NAFGA, WSA14AY24AJ1NAFGA |
| **83-17467-02** | Distributor | 1 | | All models |
| **AS-108638-03** | Distributor Assembly - 7mm To 3/8 | 1 | | All models |
| **83-25151-41** | PROTECH Liquid Line Filter Drier (Uni-directional) | 1 | | All models |

## Cabinet & hardware

| Part No. | Description | Qty | Replaced By | Fits Models |
|---|---|---|---|---|
| **83-100635-04** | Access Valve Cap | 1 | | All models |
| **AE-100069-01** | Base Pan | 1 | | WSA14AY18AJ1NAFGA, WSA14AY24AJ1NAFGA |
| **AE-100069-02** | Base Pan | 1 | | WSA14AY30AJ1NAFGA |
| **AE-57781-01** | Bracket - Mounting | 1 | | All models |
| **45-17055-01** | Bushing - Strain Relief | 1 | | All models |
| **AE-100726-97** | Cabinet | 1 | | WSA14AY30AJ1NAFGA |
| **AE-100726-98** | Cabinet | 1 | | WSA14AY18AJ1NAFGA, WSA14AY24AJ1NAFGA |
| **AE-100727-111** | Cabinet Panel | 1 | | WSA14AY18AJ1NAFGA, WSA14AY24AJ1NAFGA |
| **AE-100727-97** | Cabinet Panel | 1 | | WSA14AY30AJ1NAFGA |
| **64-101148-06** | Cable Tie - Double Loop, 7.6" | 1 | | All models |
| **91-101123-30** | Center Cap Nameplate - Fujitsu | 1 | | All models |
| **AE-100654-33** | Control Box | 1 | OBSOLETE | WSA14AY18AJ1NAFGA, WSA14AY24AJ1NAFGA |
| **AE-100654-34** | Control Box | 1 | | WSA14AY30AJ1NAFGA |
| **AE-100655-01** | Control Box Bottom | 1 | | All models |

| Part No. | Description | Qty | Replaced By | Fits Models |
|---|---|---|---|---|
| **AE-100657-31** | Control Box Cover | 1 | | All models |
| **AE-57756-01** | Cover - Low Voltage | 1 | | All models |
| **91-101419-15** | Fujitsu Label | 1 | | All models |
| **68-23565-02** | Gasket - 1/8 in. thick x 3/4 in. wide (Bulk, Non-Salable) | 1 | | All models |
| **AE-100185-31** | Panel - Valve Mounting | 1 | | All models |
| **63-22153-11** | Screws - Sheet Metal. 8-18 x 3/4 in. | 1 | | All models |
| **63-22426-01** | Sheet Metal Screw w/External Tooth Lock Washer, 10-16 x 1/2 in. | 1 | | All models |
| **63-22153-05** | Sheet Metal Screw, 8-18 x 3/8 in. | 9 | | All models |
| **63-24368-01** | Sheet Metal Screw, 8-18 x 1/4 in. | 1 | | All models |
| **63-22153-02** | Sheet Metal Screw, 8-18 x 7/8 in. | 1 | | All models |
| **45-18515-01** | Snap-In Bushing - Conductor Protection | 1 | | All models |
| **82-17063-11** | Tapered Plug | 1 | | All models |
| **82-17063-01** | Tapered Polyethylene Plug | 1 | | All models |
| **63-100404-06** | Thread-Forming Screw (black), 10-32 x 7/16 in. | 1 | | WSA14AY30AJ1NAFGA |
| **63-22487-01** | Thread-Forming Screw, 10-32 x 1/2 in. | 1 | | All models |
| **63-100404-02** | Thread-Forming Screw, 12-24 x 7/16 in. | 1 | | All models |
| **AE-100652-31** | Top Panel | 1 | | WSA14AY18AJ1NAFGA, WSA14AY24AJ1NAFGA |
| **AE-100652-32** | Top Panel | 1 | | WSA14AY30AJ1NAFGA |
| **64-17606-01** | Wire & Cable Tie - Nylon Black - 8 in. | 1 | | All models |
| **95-102925-01** | Wire Grille | 1 | | WSA14AY18AJ1NAFGA, WSA14AY24AJ1NAFGA |
| **95-102925-03** | Wire Grille | 1 | | WSA14AY30AJ1NAFGA |