BOSCH

Installation, Operation, and Maintenance Manual

RL Series Heat Pumps

RL007 | RL009 | RL012 | RL015 | RL018 | RL024 | RL030 | RL036 | RL042 | RL048 | RL060 | RL070

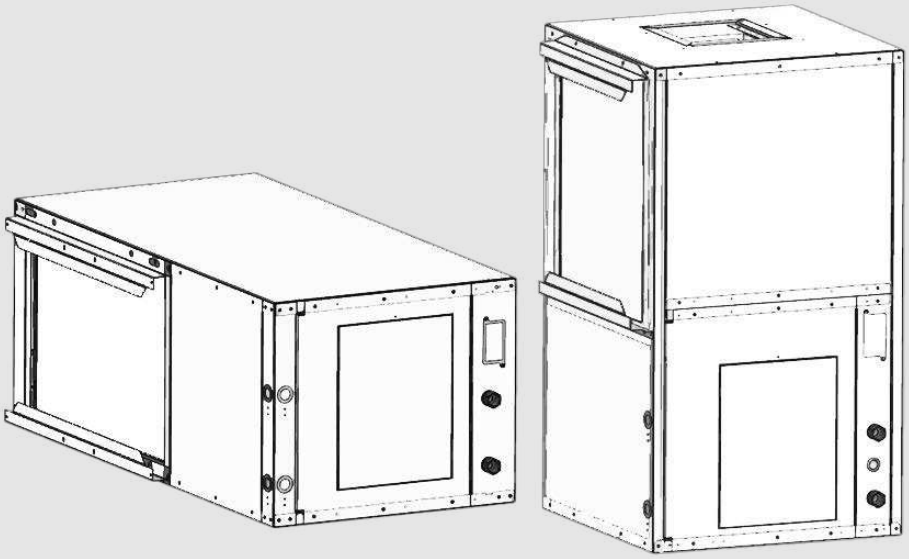

8733842393 (2024/05) US

AHRI CERTIFIED®
www.ahridirectory.org

Intertek

Table of Contents

1 Document Conventions ... 3
- 1.1 Key to Symbols ... 3
- 1.2 General Safety Instructions ... 3
- 1.3 Refrigerant Safety Warnings ... 4

2 Model Nomenclature ... 6

3 General Description ... 7
- 3.1 Operating Limits ... 8

4 Inspecting and Storing the Equipment ... 9
- 4.1 Moving and Storage ... 9
- 4.2 Initial Inspection ... 9
- 4.3 Inspection and Unpacking Prior to Installation ... 9

5 Unit Installation ... 10
- 5.1 Location Selection ... 10
- 5.2 Protecting the Unit During Construction ... 11
- 5.3 Return and Supply Air Duct Flanges Preparation ... 11
- 5.4 Mounting Vertical (VT) Units ... 11
- 5.5 Horizontal (HZ) Units ... 11
- 5.6 Condensate Drain ... 14
- 5.7 Duct System ... 15
- 5.8 Piping ... 15
- 5.9 Electrical—Power Supply Wiring ... 17
- 5.10 Electrical—Low-Voltage Wiring ... 18

6 Specific Application Considerations ... 20
- 6.1 Well Water Systems ... 20
- 6.2 Open Well Water Systems ... 20
- 6.3 Cooling Tower/Boiler Systems ... 21
- 6.4 Geothermal Closed-Loop Systems ... 22

7 Water-Quality Considerations ... 23

8 Post-Installation System Checkout ... 25

9 Pre-Start-Up ... 25
- 9.1 Air Coil ... 25
- 9.2 Checking Scroll Compressor Rotation ... 25

10 Start-up ... 26
- 10.1 Unit Start Up Cooling Mode ... 26
- 10.2 Unit Start Up Heating Mode ... 26

11 Commissioning ... 26

12 Safety Devices and the UPM Controller Overview ... 27
- 12.1 UPM Default Settings and DIP Switch Positions ... 29
- 12.2 UPM Board Features ... 29
- 12.3 UPM Sequence of Operation ... 31

13 Fan Motor ... 32
- 13.1 Permanent Split Capacitor Motors (PSC) ... 32

14 Maintenance ... 35
- 14.1 Filter Changes ... 35
- 14.2 Annual Checkup ... 35
- 14.3 Annual Condensate Drain Cleaning ... 35

15 Handling Periodic Lockouts ... 35

16 Servicing and Repair Information ... 35
- 16.1 Personal Protective Equipment ... 35
- 16.2 Confined Space Work ... 35
- 16.3 Controlled Work Procedure ... 35
- 16.4 Safety Checks ... 35
- 16.5 Checks to Electrical Devices ... 36
- 16.6 Repairs to Sealed Components ... 36
- 16.7 Repair to Intrinsically-Safe Components ... 36
- 16.8 Check Cabling ... 36
- 16.9 Detection of Flammable Refrigerants ... 36
- 16.10 Removal and Evacuation ... 37
- 16.11 Charging Procedures ... 37
- 16.12 Recovery ... 37
- 16.13 Service Access ... 38

17 Decommissioning Information ... 39
- 17.1 Protecting the Environment ... 39
- 17.2 Decommissioning Procedure ... 39
- 17.3 Labeling ... 39

18 Troubleshooting ... 40
- 18.1 Unit Troubleshooting ... 40

19 Specification Tables ... 46
- 19.1 Operating Temperatures and Pressures ... 46
- 19.2 Water-Side Pressure Drop Table ... 52
- 19.3 Compressor Characteristics ... 53
- 19.4 Corner Weights (Horizontal Cabinets Only) ... 54
- 19.5 Model 24 Thermistor (Freeze Sensor) Test Values ... 55

20 Wiring Diagrams ... 56
- 20.1 Single-Stage, Single-Phase, Standard Unit with Permanent Split Capacitor (PSC) Motor ... 56

21 Dimensional Drawings ... 57
- 21.1 Vertical (VT) Unit Dimensions ... 57
- 21.2 Horizontal (HZ) Unit Dimensions ... 59
- 21.3 Service Clearance ... 61

22 Terminology ... 62
- 22.1 Acronyms ... 62
- 22.2 Terms ... 62

23 Check-Out Sheet ... 63

24 Notes ... 64

1 Document Conventions

1.1 Key to Symbols

1.1.1 Warnings

Warnings in this document are identified by a warning triangle followed by a signal word.

Signal word at the beginning of a warning indicate the type and seriousness of the ensuing risk if measures to prevent the risk are not taken.

The following signal words are defined and can be used in this document:

DANGER

DANGER indicates a situation that, if not avoided, will result in death or serious injury.

WARNING

WARNING indicates a situation that, if not avoided, could result in death or serious injury.

CAUTION

CAUTION indicates a situation that, if not avoided, could result in minor to moderate injury.

NOTICE

NOTICE is used to address practices not related to personal injury.

1.1.2 Important Information

This info icon indicates important information where there is no risk to property or people.

1.1.3 Additional Symbols

Symbol	Meaning
▶	A step in an action sequence.
➔	A reference to a related part in the document.
•	A list entry.
–	A list entry (second level)

Table 1 Additional Symbols

1.2 General Safety Instructions

DANGER

Personal Injury Hazard or Property Damage!
Improper installation, adjustment, alteration, service, maintenance, or use can cause explosion, fire, electrical shock, or other conditions that may cause death, serious personal injury and/or property damage. Consult a qualified installer, service agency, or your distributor or branch for information or assistance. The qualified installer or agency must use factory-authorized kits or accessories when modifying this product. Refer to the individual instructions packaged with the kits or accessories when installing.

DANGER

Electric Shock!
Before performing service or maintenance operations on the system, turn OFF main power to the unit. Electrical shock will cause personal injury or death.

WARNING

Personal Injury Hazard!
Installation and servicing of this equipment can be hazardous due to system pressure and electrical components. Only trained and qualified personnel should install, repair, or service the equipment.

WARNING

When working on equipment, always observe precautions described in the literature, tags, and labels attached to the unit. Follow all safety codes. Wear safety glasses and work gloves. Use a quenching cloth for brazing, and place a fire extinguisher close to the work area.

WARNING

DO NOT reuse screws removed from the unit in Step #1 of Installing the Hanging Bracket Kit to mount the hanging brackets to the unit.

WARNING

Do NOT use means to accelerate the defrosting process or to clean, unless recommended in these instructions.

WARNING

Fire Hazard!

The appliance must be stored in a room without continuously operating ignition sources (e.g., open flames, an operating gas appliance, or an operating electric heater).

WARNING

Fire Hazard!

Auxiliary devices that may be ignition sources must NOT be installed in the ductwork, unless the auxiliary devices are approved for use with the specific appliance or declared suitable for the refrigerant.

CAUTION

Burn Hazard!

Hot surfaces inside unit may cause burns.

CAUTION

Personal Injury Hazard!

When servicing horizontal units do not remove top panel while unit is suspended as this compromises unit structure. If top panel removal is required for service, the base of the unit must be completely supported on a level surface strong enough to hold its weight.

CAUTION

Personal Injury Hazard!

Sheet metal parts may have sharp edges or burrs. Use care and wear appropriate protective clothing and gloves when handling parts.

NOTICE

To avoid equipment damage, DO NOT use these units as a source of heating or cooling during the construction process. Doing so may affect the unit's warranty. The mechanical components and filters will quickly become clogged with construction dirt and debris, which may cause system damage or failure.

NOTICE

This appliance is not intended for use by people (including children) with reduced physical, sensory, or mental capabilities, or with lack of experience and knowledge, unless they are supervised or have been given instruction concerning use of the appliance by a person responsible for their safety.

Children should be supervised to ensure that they do not play with the appliance.

1.3 Refrigerant Safety Warnings

Refrigerant Safety Group
A2L

DANGER

Poisonous Gas!

Poisonous gas can be created when refrigerant (R454B) is exposed to open flames.

WARNING

Risk of Fire!

Flammable Refrigerant Used—To be repaired only by trained service personnel. DO NOT puncture refrigerant tubing.

WARNING

Risk of Fire!

Flammable Refrigerant Used—Dispose of properly in accordance with federal or local regulations.

WARNING

Personal Injury Hazard!
Do NOT pierce or burn refrigerant lines.

WARNING

Be aware that refrigerants may not contain an odor.

NOTICE

To avoid the release of refrigerant into the atmosphere, the refrigerant circuit of this unit must be serviced only by technicians who meet local, state, and federal proficiency requirements.

NOTICE

All refrigerant discharged from this unit must be recovered WITHOUT EXCEPTION. Technicians must follow industry accepted guidelines and all local, state, and federal statutes for the recovery and disposal of refrigerants. If a compressor is removed from this unit, refrigerant circuit oil will remain in the compressor. To avoid leakage of compressor oil, refrigerant lines of the compressor must be sealed after it is removed.

2 Model Nomenclature

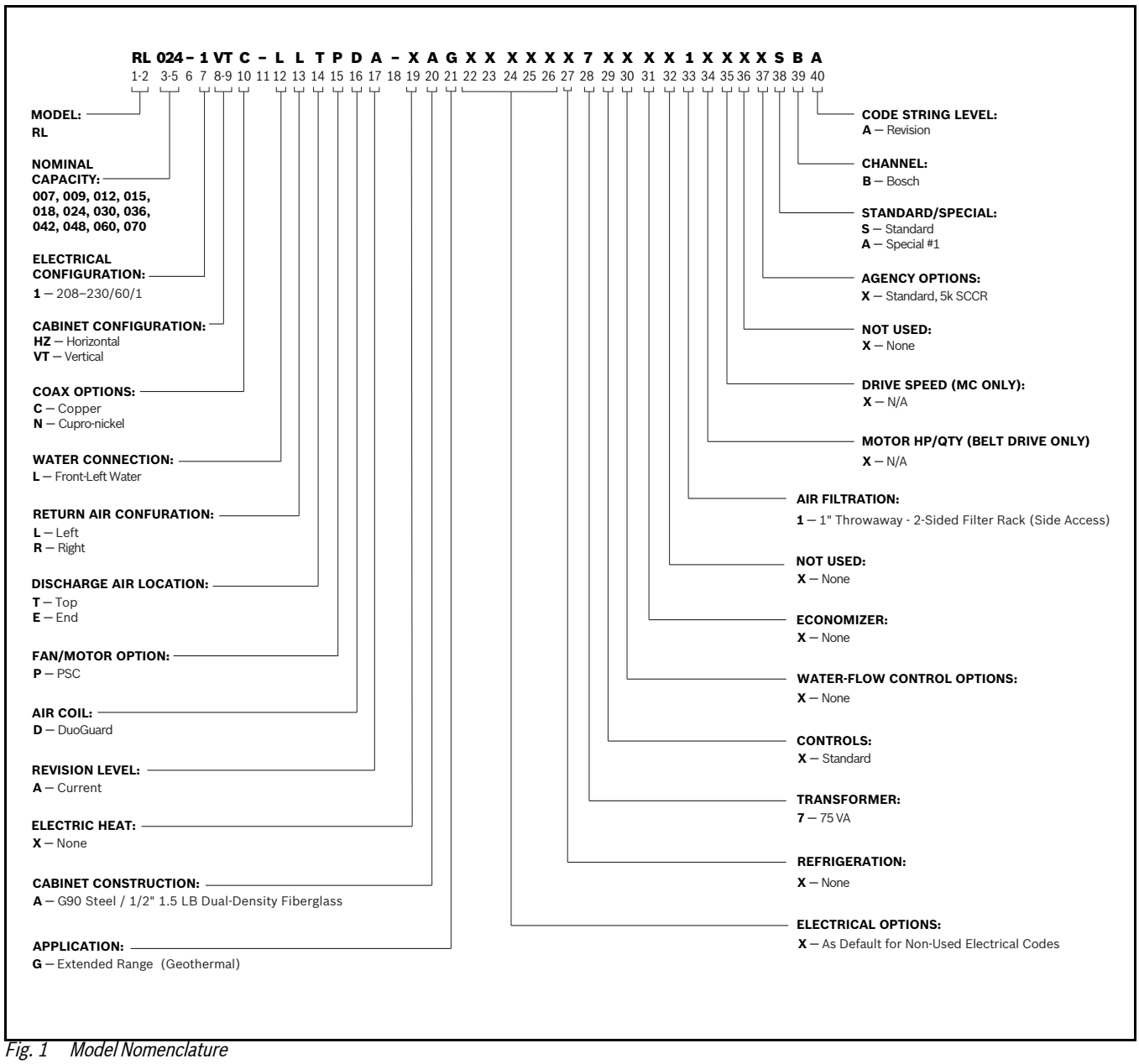

Fig. 1 Model Nomenclature

3 General Description

The RL series water-to-air heat pump provides an unmatched combination of performance, features, and flexibility for both high-performance new construction applications and replacement of existing water-to-air heat pumps.

All units are certified by the Air-Conditioning, Heating, and Refrigeration Institute (AHRI) to AHRI/ANSI/ASHRAE/ISO standard 13256-1 for water-to-air and brine-to-air heat pumps at Water Loop Heat Pump, Ground Loop Heat Pump, and Ground Water Heat Pump application points. All RL Water-to-Air Heat Pumps conform to UL 60335-2-40 by Intertek-ETL.

RL series units are available in two basic configurations: Vertical Top-Supply Air (VT) and Horizontal End-Supply Air or Straight-Through Supply Air (HZ). Each of these configurations are available with either left- or right-hand return air. HZ models can have the supply air field converted from end discharge air to straight through with no additional parts required.

RL units can accommodate a wide range of air temperatures, however, standard RL models should not be used for 100% outside air without consulting with Engineering Applications (EAP). 100% outside air routinely requires higher levels of dehumidification than is available from equipment designed for return air applications.

NOTICE

RL units are designed and rated for indoor installation only.

NOTICE

DO NOT install RL units in environments that fall below freezing or exceed 100°F ambient.

NOTICE

RL cabinets are constructed of heavy-gauge galvanized steel and will resist most common types of corrosion but avoid installations in high-salt concentration or highly-corrosive environments.

RL series units are offered with a wide range of factory-installed options including: internal 2-way valves; DuoGuard™ air coils; 2"4-sided filter racks; MERV 13 filters (with constant airflow ECM motors); on-board DDC controls; copper or cupro-nickel water coils; water-side economizers, and more refer to the unit model number for installed options. →See the Options section on page #32.

On-board safety features will protect the major unit components from damage.

3.1 Operating Limits

3.1.1 Environment

This equipment is designed for indoor installation only. Extreme variations in temperature, humidity, and corrosive water or air will adversely affect the unit performance, reliability and service life.

3.1.2 Power Supply

A voltage variation of ± 10% of nameplate utilization voltage is acceptable.

3.1.3 Unit Starting Conditions

Minimum ambient temperature for heating operation is 45°F. Minimum entering air for heating is 40°F. Minimum entering water temperature for heating with standard range units is 50°F and for extended range units is 20°F. Air and water flow rates must be within the cataloged range.

Operating limits listed in the Unit Starting Conditions section are not suitable for continuous operating conditions. Assume that such start-up conditions are for the purpose of bringing the building space up to occupancy temperature.

3.1.4 Normal Operating Conditions

Normal operating conditions must fall in the limits defined in the table below. (→Refer to Table 2.)

Operating Limits				
Fluid Type	**Specification**		**Cooling**	**Heating**
Air	Minimum ambient air temperature		50°F	40°F
	Maximum ambient air temperature		100°F	85°F
	Rated ambient air temperature		80°F	68°F
	Minimum air coil entering air db/wb		65/57°F	45°F
	Maximum air coil entering air db/wb		95/85°F	80°F
	Rated air coil entering air db/wb		80/67°F	68/59°F
Liquid	**Antifreeze Protection Required**		**–**	**LWT <40°F**
			–	**EWT <50°F**
	Minimum water coil entering fluid temperature		45°F	20°F
	Maximum water coil entering fluid temperature		110°F	80°F
	Rated water coil entering fluid temperature	Water Loop	86°F	68°F
		Ground Loop	77°F	32°F
		Ground Water	59°F	50°F
	Maximum operating water pressure	Standard Unit	400 psi/2,785 kPa	
		With factory installed water valve option	300 psi/2,068 kPa	
	Minimum operating water flow rate		1.5 GPM per ton	

Note: Maximum and minimum operating limits may not be combined. Refer to Engineer Submittal Sheet on the product information page. (See the QR code on the back page of the IOM).

Acronyms:
LWT: Leaving Water Temperature
EWT: Entering Water Temperature

Table 2 Operating Limits

4 Inspecting and Storing the Equipment

4.1 Moving and Storage

If the equipment is not needed for immediate installation upon its arrival at the job site, it should be left in its shipping carton and stored in a clean and dry area. Units must only be stored or moved in the normal upright position at all times.

NOTICE

Be careful to avoid damage to filter racks and duct flanges when storing or handling units.

NOTICE

Never lift or move units by filter racks, external piping, or attached options/accessories.

NOTICE

Never stack units when transporting them.

NOTICE

When storing units:

- DO NOT stack units larger than 6-tons capacity!
- DO NOT stack vertical units with under 6-tons capacity more than two (2) high.
- DO NOT stack horizontal units with 6-tons capacity more than three (3) high.

4.2 Initial Inspection

Verify that all items have been received and that there is no visible damage. Note any visible damage or shortage on all copies of the freight bill. Concealed damage not discovered until after removing the units from packaging must be reported to Bosch by the original purchaser by filing a claim at:
https://claims.bosch-homecomfort.us

4.3 Inspection and Unpacking Prior to Installation

Inspect the product carefully for any defects or other discrepancies. If any are identified, contact the Bosch Wholesaler/Distributor from which you purchased the unit.

The following should be checked:

- Compare the electrical data on the unit nameplate with ordering and shipping information to verify that the correct unit has been shipped.
- Verify that the unit is the correct model for the entering water temperature of the job.
- Only remove the packaging when the unit is ready for installation.
- Verify that the refrigerant tubing is free of kinks or dents, and that it does not touch other unit components.
- Inspect all electrical connections. Be sure connections are clean and tight at the terminals.
- Remove any shipping brackets from the unit attached to the pallet.

5 Unit Installation

This section contains information on the following:

- Location Selection—page #10
- Protecting the Unit During Construction—page #11
- Return and Supply Air Duct Flanges Preparation—page #11
- Mounting Vertical (VT) Units—page #11
- Configuring the Horizontal Supply Air Orientation—page #11
- Mounting Horizontal (HZ) Units—page #12
- Installing the Hanging Bracket Kit—page #13
- Condensate Drain—page #14
- Duct System—page #15
- Piping—page #15
- Electrical—Power Supply Wiring—page #17
- Electrical—Low-Voltage Wiring—page #18
- Specific Application Considerations—page #20
- Water Quality Considerations—page #23
- Post-Installation System Checkout—page #25
- Pre-Start-Up—page #25
- Start-Up—page #26
- Commissioning—page #26

WARNING

This product is to be installed, serviced, and uninstalled by professionals only.

NOTICE

DO NOT use RL series units for temporary heating, air conditioning or ventilation during construction, especially when plastering, sanding, or painting. Care should be taken to avoid introduction of dust, paint, or debris into the air coil. Warranty will be void if the units are used during construction.

5.1 Location Selection

Unit location selection is very important for proper installation, functioning, and ease of servicing.

When selecting a location for the unit, the following conditions must be met:

- Location must be indoors.
- The ambient temperatures must be maintained above freezing.
- Location must be isolated from sleeping areas, private offices, and other acoustically sensitive spaces.
- Mount the unit using an adequate slope of the condensate lines to allow for proper drainage. If an appropriate slope cannot be achieved, a field-supplied condensate pump may be required.
- On horizontal units, adequate room must be below the unit level for the condensate drain trap and avoid placing the unit above piping, ducting, and electrical lines to facilitate future removal and replacement of unit.
- Sufficient space for duct connection must be available. Do not allow the weight of the duct work to rest on the unit.
- Adequate clearance for filter replacement and drain pan cleaning must exist. DO NOT allow piping, conduit, etc. to block filter access.
- Sufficient access to allow maintenance and servicing of the fan and fan motor, compressor and coils must be allowed. Removal of the entire unit from the closet should not be necessary.
- An unobstructed path to the unit within the closet or mechanical room must be present. Space should be sufficient to allow return air to freely enter the unit.
- Ready access to water valves, fittings, and screwdriver access to unit side panels, discharge collar, and all electrical connections must be provided.

Where access to side panels is limited, pre-removal of the control box side-mounting screws may be necessary for future servicing.

NOTICE

RL series units are not approved for outdoor installation; therefore, they must be installed inside a structure in a conditioned space.

A “conditioned space” is a space within a building provided with heated or cooled air or both (or surfaces) and, where required, with humidification or dehumidification means to maintain conditions for an acceptable thermal environment.

5.2 Protecting the Unit During Construction

Once the unit is properly positioned on the job site, cover it with either a shipping carton, vinyl film, or an equivalent protective covering. Cap opens ends of pipes stored on the job site. This precaution is especially important in areas where painting, plastering, or spraying of fireproof material, etc. is not yet complete. Foreign material that accumulates within the units can prevent proper start-up and require costly clean-up operations. Before installing any of the systems components, be sure to examine each pipe, fitting valves and remove any dirt or foreign material found in or on these components.

NOTICE

Equipment should never be used during construction due to likelihood of wall board dust accumulation in the air coil of the equipment that permanently affects the performance and may shorten the life of the equipment.

5.3 Return and Supply Air Duct Flanges Preparation

RL heat pumps feature fold-out return and supply air duct flanges. These fold-out flanges come folded in from the factory to allow the heat pumps to more easily fit through doorways and other tight spaces, and also to prevent damage in shipping and handling.

Following installation of the heat pump, fold out all fold-out flanges to ensure that return and supply air flow is not obstructed. These flanges can be easily folded using standard or duckbill pliers. Once folded out, these flanges can be used to support light duct work loads.

5.4 Mounting Vertical (VT) Units

In order to minimize vibration transmission from the unit to the building structure mount the RL Series vertical units on a vibration absorbing pad slightly larger than the unit base. (→See Fig. 2.)

It is generally not necessary to anchor the unit unless required by local code. All major service access for the RL Series vertical models is from the front side of the unit. When installing the unit in a confined space such as a closet, ensure that the service panel screws are accessible, that the filter can be replaced without damage, and that water and electrical connections are accessible. For models with a unit-mounted disconnect switch, make sure the switch can be easily seen and operated.

To reduce sound transmission, install units using flexible electrical conduit and hose kits. Care should be taken to ensure that no part of the unit cabinet is touching part of the building structure.

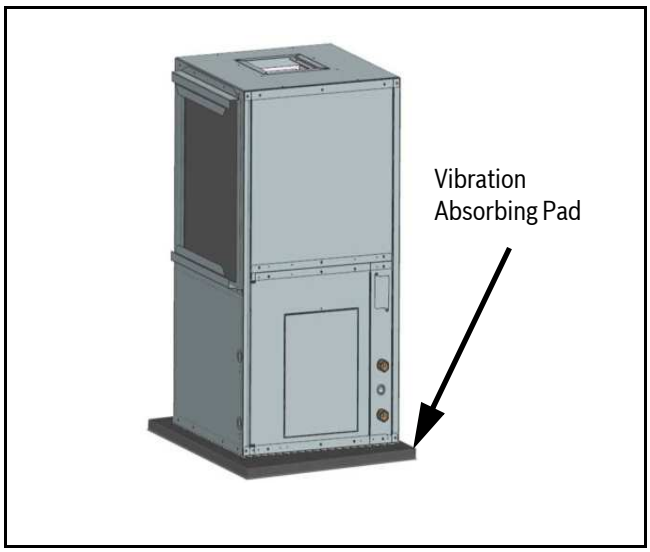

Fig. 2 Vibration Mounting Pad

5.5 Horizontal (HZ) Units

5.5.1 Configuring the Horizontal Supply Air Orientation

The supply air location on RL Series Horizontal units can be field converted from end blow to straight through or vice-versa.

NOTICE

Blower configuration changes should be done prior to unit being installed in the final location.

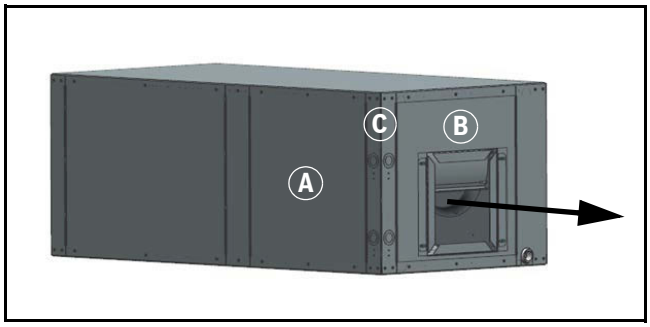

Fig. 3 End-Blow Orientation

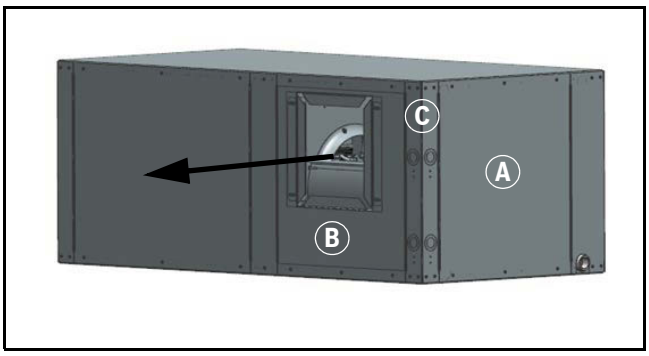

Fig. 4 Straight-Through Orientation

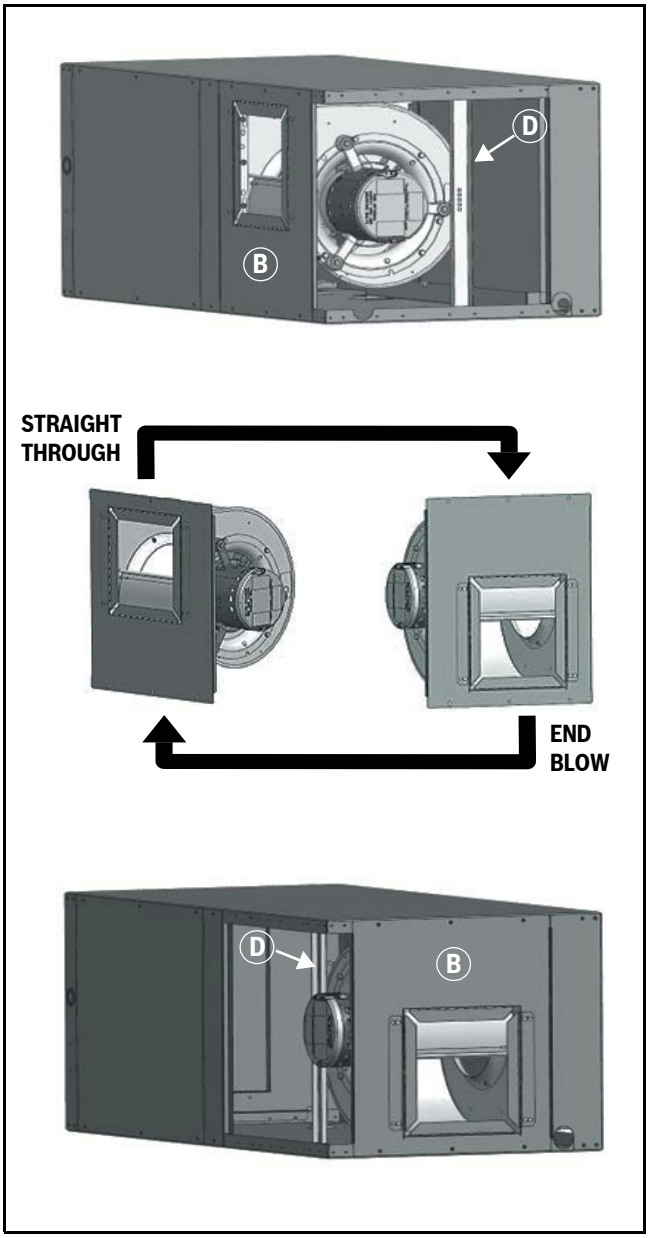

Fig. 5 Blower Configuration

To convert the supply air direction, follow the steps below: (➔See Fig. 3, Fig. 4, and Fig. 5.)

1. If the unit is connected to power, shut OFF the unit and disconnect switch or circuit breaker.
2. Locate the Motor Access Panel (A). Remove the three screws at top and the three screws at the bottom of the panel. Remove the access panel and place it aside.

NOTICE

Be careful not to damage the refrigerant coils or any other internal unit components.

3. Locate Blower Panel (B). Remove the three screws from top and the three screws from bottom of the panel. Leave the blower panel in place on the base pan.
4. Locate Access Panel Corner Post (C). Remove the four screws from top and the four screws from the bottom. Remove the corner post and set it aside.
5. Locate Blower Support Bracket (D). Remove the one screw and set it aside.
6. Move Blower Panel (B) with blower to desired location, rotating it 180°. (➔See Fig. 5.) The motor power and control harness can be unplugged to facilitate blower relocation.
7. Reinstall Access Panel Corner Post (C) using the eight screws previously removed.
8. Fasten Blower Panel (B) using the six screws previously removed.
9. Reinstall and fasten Blower Support Bracket (D) using the one screw previously removed.
10. Reattach the motor power and control harness if disconnected earlier.
11. Reinstall and fasten Motor Access Panel (A) using the six screws previously removed.

5.5.2 Mounting Horizontal (HZ) Units

While HZ units may be installed on any level surface strong enough to hold their weight, they are typically suspended above a ceiling by threaded rods. Attach the unit corners using a hanging bracket kit supplied with the HZ units. The rods must be securely anchored to the ceiling. Refer to the hanging bracket assembly and installation instructions for details.

NOTICE

Horizontal units installed above the ceiling must conform to all local codes. An auxiliary drain pan, if required by code, must be at least four inches larger than the bottom perimeter of the heat pump.

Plumbing connected to the heat pump must not come in direct contact with building structure or its components (such as joists, trusses, walls, etc.).

Some applications require an attic floor installation of the HZ unit. In those cases, the unit must be set in a full-sized secondary drain pan on top of vibration absorbing pads. The secondary drain pan prevents possible condensate overflow or water leakage damage to the ceiling. If there is not attic floor in place, then the secondary drain pan is normally placed on a plywood base isolated from the ceiling joists by additional layers of vibration absorbing pads. In both cases, a 3/4" drain connected to this secondary pan must be run to an eave at a location that will be noticeable.

The HZ units condensate drain pans are NOT internally sloped.

NOTICE

HZ units must be installed pitched 1/4" towards the condensate drain connection in both directions to facilitate condensate removal. (See Fig. 5.)

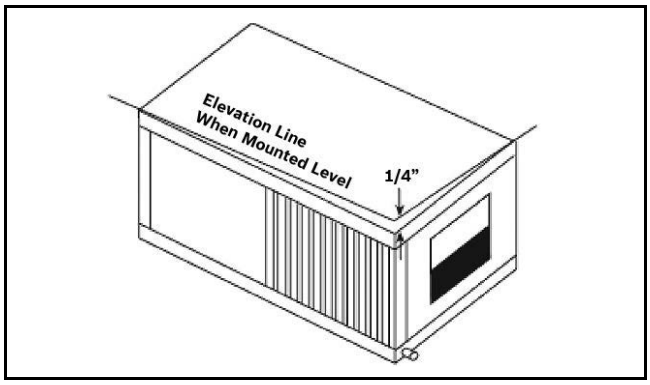

Fig. 6 Pitched Unit

NOTICE

If the unit is located in a crawl space, the bottom of the unit must be at least four inches above grade to prevent flooding of the electrical parts due to heavy rains.

5.5.3 Installing the Hanging Bracket Kit

All HZ units come with hanging bracket installation kit to facilitate suspended unit mounting using threaded rod. Hanging brackets are to be installed as shown in Fig. 7.

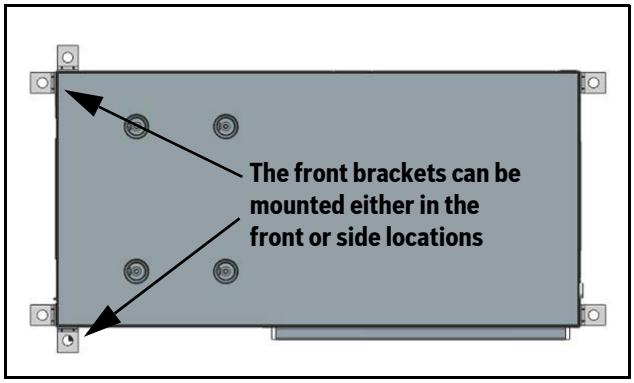

Fig. 7 Hanging Brackets Locations

This kit includes the following:
(5) Brackets
(5) Rubber Vibration Isolators
(8) Screws: #10 x 1/2
(10) Bolts: 1/4–28 x 1/2" Hex bolt (Note: Not needed for this series.)

The following are needed and are to be field provided:
- Threaded rod (3/8" max. dia.)
- Washers (1-3/4" min. O.D.)
- Hex nuts

WARNING

Follow all applicable codes and requirements when hanging this unit and selecting the threaded rod material, etc.

1. Remove and discard factory provided screws from locations where hanging brackets will be installed as shown in Fig. 8.

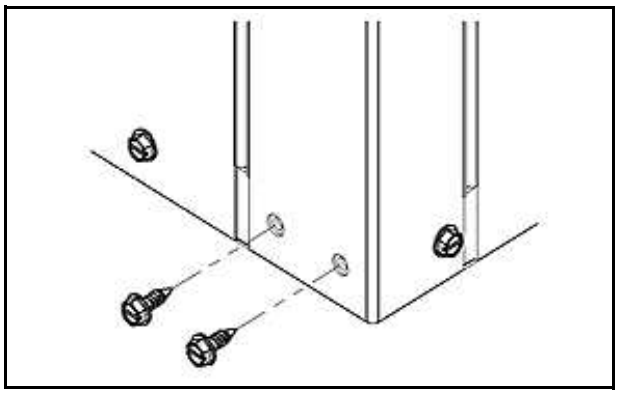

Fig. 8 Screw Locations

2. Mount the four brackets to unit's corner posts using the screws provided in the kit as shown in Fig. 9. The bracket tabs go into the slots on the base, and then the brackets are screwed down.

   The front brackets can be orientated in either way depicted in Fig. 7. Choose the best option for the situation.

WARNING

DO NOT reuse screws removed from the unit in Step #1 to mount the hanging brackets to the unit.

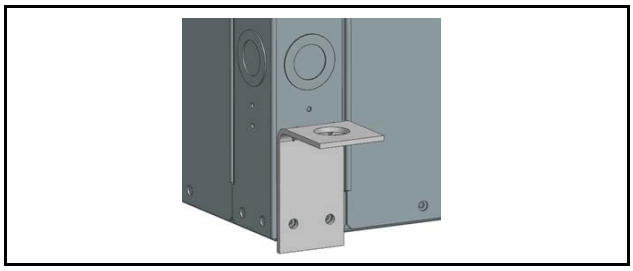

Fig. 9 Attaching Brackets

3. Install rubber grommet onto the brackets as shown in Fig. 10.
4. Hang the unit and assemble the field-provided threaded rod, nuts, and washers on to the brackets as shown in Fig. 10.

DANGER

The rods must be securely anchored to the ceiling.

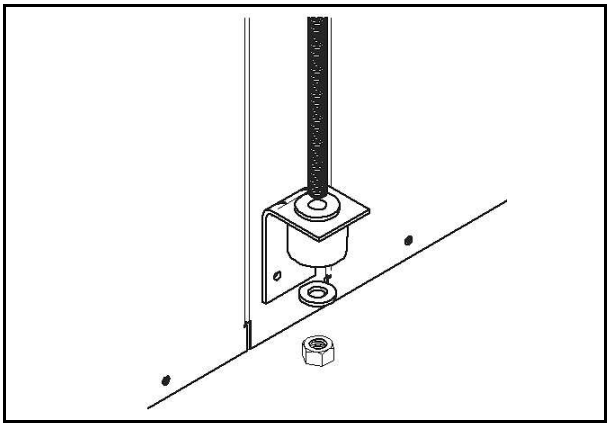

Fig. 10 Threaded Rod

5.6 Condensate Drain

5.6.1 Horizontal (HZ) Units

A drain line must be connected to the heat pump and pitched away from the unit a minimum of 1/8" per foot to allow the condensate to flow away from the unit.

This connection must be in conformance with local plumbing codes. A trap must be installed in the condensate line to ensure free condensate flow.

Horizontal units are not internally trapped.

A vertical air vent is sometimes required to avoid air pockets. The depth of the trap depends on the amount of positive or negative pressure that is on the drain pan while the unit's fan is operating. A second trap must NOT be included. (➔See Fig. 11.)

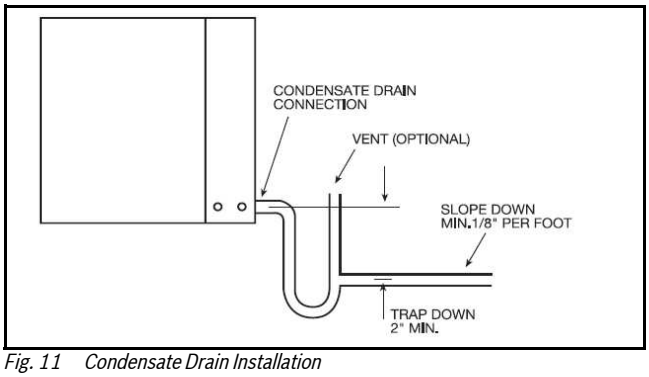

Fig. 11 Condensate Drain Installation

5.6.2 Vertical (VT) Units

Vertical configuration units are internally trapped from the factory. A second trap must NOT be included. (➔See Fig. 12.)

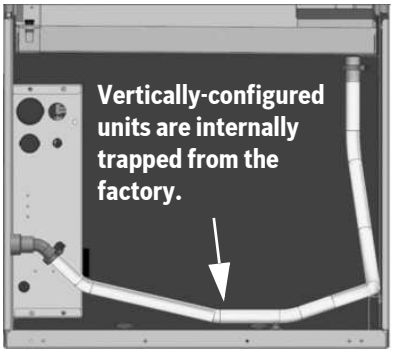

Fig. 12 Vertical Units are Internally Trapped

5.7 Duct System

All RL Series models are provided with a supply air outlet collar and return air duct flange to facilitate duct connections.

Supply air duct and return air duct flanges are shipped unfolded with the unit. They need to be folded. ➔See "Return and Supply Air Duct Flanges Preparation" on page #11 for details.

Refer to unit Dimensional Drawings for physical dimensions of the collar and flange. (➔See page #57.)

A flexible duct connector is recommended for supply and return air duct connections on metal duct systems. In order to avoid heat loss or gain and prevent condensate forming during the colling operation insulate all metal ducting with a minimum of 1" duct insulation. Application of the unit to uninsulated duct work is not recommended as the unit's performance will be adversely affected.

The factory filter should be left in place on a free return system.

For new or replacement market installations, please refer to current ASHRAE procedures for duct sizing to ensure proper unit's operation and air distribution. If the duct system is too small, larger duct work should be installed. Check for any leaks in the existing duct work and repair as needed.

The duct system and all diffusers must be sized to handle the designed air flow quietly. To maximize sound attenuation of the unit's blower, insulate the supply and return air plenums. There should be no direct straight air path through the return air grille into the heat pump. The return air inlet to the heat pump must have at least one 90 degree turn away from the space return air grill. If air noise or excessive air flow are a problem, the blower speed can be changed to a lower speed to reduce air flow.

5.8 Piping

Supply and return piping must be as large as the unit connections on the heat pump (larger on long runs).

In order to avoid possible vibration, use flexible hose between the unit and the rigid system.

NOTICE

Never use flexible hoses of a smaller inside diameter than that of the water connections on the unit.

Units are equipped with female pipe thread fittings for water connections.

NOTICE

Piping systems that contains steel pipes or fittings may be subject to galvanic corrosion. Dielectric fittings should be used to isolate the steel parts of the system to avoid galvanic corrosion.

NOTICE

DO NOT overtighten the connections to avoid damage to threads.

Install ball valves in the supply and return lines for unit isolation and unit water flow balancing and service.

RL units are supplied with a copper or optional cupro-nickel condenser. A cupro-nickel heat exchanger is recommended for the following:

- Conditions anticipating moderate scale formation
- Brackish water
- Ground Loop application
- Ground water application

(➔Refer to the Water Quality Table on page #24.) Water quality must meet the standards stated in the table.

NOTICE

Proper testing is required to ensure the well water quality is suitable for use with water source equipment.

Both the supply and discharge water lines will sweat if subjected to low water temperature. Insulate lines to prevent damage from condensation.

All manual flow valves used in the system must be quarter-turn brass full-port ball valves. Globe and gate valves must not be used due to high-pressure drops and poor throttling characteristics.

Pressure/temperature ports are recommended in both the supply and return lines for system flow balancing and determining the system capacity versus rated conditions. The water flow can be accurately set by measuring the water-to-refrigerant heat exchangers water-side pressure drop. See the unit specification sheets for the water flow and pressure drop information. (→Refer to the Water-Side Pressure Drop Table on page #52.)

NOTICE

DO NOT expose water piping to freezing ambient temperatures unless the fluid is properly protected with antifreeze.

NOTICE

Never exceed the recommended water flow rates as serious damage or erosion of the water-to-refrigerant heat exchanger could occur.

Always check carefully for water leaks and repair appropriately.

5.8.1 Flow Regulation

Flow regulation can be accomplished by two methods. Most water control valves have a flow adjustment built into the valve. By measuring the pressure drop through the unit heat exchanger, the flow rate can be determined. Adjust the water control valve until the desired flow is achieved. Since the pressure constantly varies, two pressure gauges may be needed in some applications.

An alternative method is to install a flow-control device. These devices are typically an orifice of plastic material designed to allow a specified flow rate that are mounted on the outlet of the water control valve. Occasionally these valves produce a flow noise that can be reduced by applying some back pressure. To accomplish this, slightly close the leaving isolation valve.

5.8.2 Closed-Loop Flushing

WARNING

If equipped with a disconnect switch, de-energize unit by opening line voltage at disconnect switch or If no disconnect switch is present, de-energize by shutting OFF line voltage at the service panel before flushing the system.

Once the piping is complete, units require final purging and loop charging. A flush cart pump of at least 1.5 hp is needed to achieve adequate flow velocity in the loop to purge air and dirt particles from the loop. Flush the loop to purge air and dirt particles from the loop. Flush the loop in both directions with a high volume of water at a high velocity.

Follow the steps below to properly flush the loop:

1. Verify that the power is OFF.
2. Fill loop with water from the hose through flush cart before using flush cart pump to ensure an even fill. Do not allow the water level in the flush cart tank to drop below the pump inlet line to prevent air from filling the line.
3. Maintain a fluid level in the tank above the return tee to avoid entering back into the fluid.
4. Shutting OFF the return valve that connects into the flush cart reservoir it will allow 50 psig surges to help purge air pockets. This maintains the pump at 50 psig.
5. To purge, keep the pump at 50 psig until maximum pumping pressure is reached.
6. Open the return valve to send a pressure surge through the loop to purge any air pockets in the piping system.
7. A noticeable drop in fluid level will be seen in the flush cart tank. This is the only indication of air in the loop.

If air is purged from the system while using a 10 inch PVC flush tank, the level drop will only be 1 to 2 inches, since liquids are incompressible. If the level drops more than this, flushing should continue since air is still being compressed in the loop. If level is less than 1 to 2 inches, reverse the flow.

8. Repeat this procedure until all air is purged.
9. Restore power.

Antifreeze may be added before, during, or after the flushing process. Refer to the Antifreeze section below for more detail.

Loop static pressure will fluctuate with the seasons. Pressures will be higher in the winter months than during the warmer months. this fluctuation is normal and should be considered when charging the system initially. Run the unit in either heating or cooling for several minutes to condition the loop to a homogeneous temperature.

When complete, perform a final flush and pressurize the loop to a static pressure of 40 to 50 psig for winter months or 15 to 20 psig for summer months.

After pressurization, be sure to remove the plug from the end of the loop pump motor to allow trapped air to be discharged and to ensure the motor housing has been flooded. Be sure the loop flow center provides adequate flow through the unit by checking pressure drop across the heat exchanger.

5.8.3 Antifreeze

In areas where entering loop temperatures drop below 40°F or where piping will be routed through areas subject to freezing, antifreeze is needed. Alcohols and glycols are commonly used as antifreeze agents. Freeze protection must be maintained to 15°F below the lowest expected entering loop temperature. For example, if the lowest expected entering loop temperature is 30°F, the leaving loop temperature would be 22°F to 25°F. Therefore, the freeze protection must be at 15°F (30°F-15°F=15°F).

5.9 Electrical—Power Supply Wiring

5.9.1 High-Voltage Wiring

DANGER

Electric Shock!

The system contains an oversize, protective, earthing (grounding) terminal that must be properly connected otherwise personal injury or death may result.

WARNING

Field wiring must be installed by qualified and trained personnel.

WARNING

Power to the unit must be within the operating voltage range indicated on the unit's nameplate or on the performance data sheet.

NOTICE

All field-installed wiring must comply with the National Electric Code as well as all applicable local codes.

NOTICE

Properly-sized fusible safety switches or HACR circuit breakers must be installed for branch circuit protection. See the unit nameplate for maximum fuse or breaker size.

NOTICE

Operation of unit on improper line voltage or with excessive phase imbalance will be hazardous to the unit, constitutes abuse and may void the warranty.

NOTICE

All high-voltage connections must be torqued as specified by the component's manufacturer.

Refer to the unit electrical data on the unit nameplate for wire and branch circuit protection sizing. Supply power voltage and phasing must match the required voltage and phasing shown on the unit nameplate. Operating the unit below the minimum voltage, above the maximum voltage or with incorrect phasing can result in poor system performance or damage to the heat pump. All field wiring must be installed by qualified and trained personnel. Refer to the unit wiring diagram for field connection requirements.

The Electrical Box is designed to swing out of the way allowing for improved access and servicing of the unit. To ensure proper swing functionality, it is essential to provide sufficient wire length. This can be achieved by using flexible conduit installed in the unit (→See Fig. 13) to guide the wire length determination. Adequate wire length is required to enable full extension or opening of the control box, up to 90 degrees.

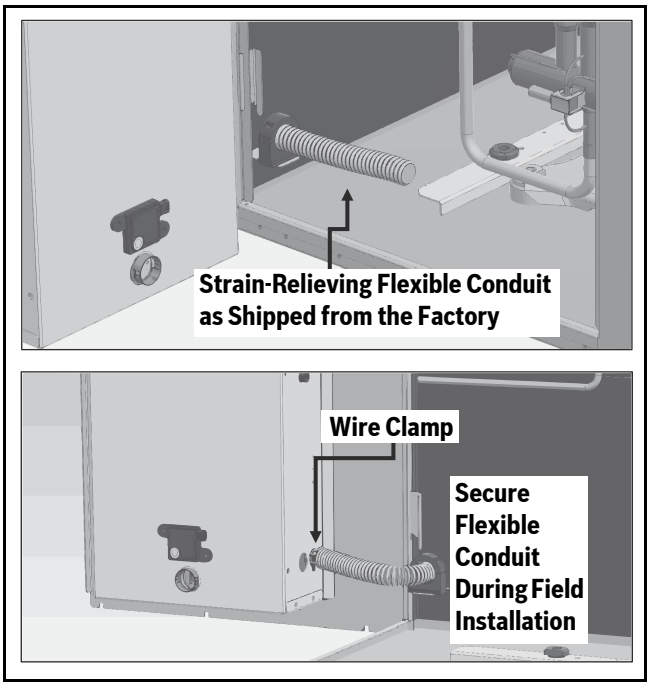

Fig. 13 Flexible Conduit

To minimize the transmission of vibration from the unit cabinet to the building, enclose the power wiring to the heat pump in a flexible conduit.

The unit is provided with concentric knockouts for attaching common trade sizes of conduit. Route the power-supply wiring through the knockout opening and the flexible conduit inside the unit. After the field wiring is routed to the electrical box, ensure the wire clamp is tightened to secure the flexible conduit to the electrical box. (→See Fig. 13.) Always connect the ground lead to the grounding lug provided in the unit. Follow the unit's wiring diagram and the following instructions for power leads and ground connection depending on unit options.

Power is connected to the line (L) side of the compressor contactor and the ground to the ground lug in the unit electrical box.

CAUTION

The unit ground wire must never be used as a neutral wire.

5.10 Electrical—Low-Voltage Wiring

For heat pumps with a constant-airflow fan motor, the thermostat wiring is connected to a terminal strip located on the ECM (Electronically Commutated Motor) control board, which is located in the electrical box. Refer to the unit wiring diagram for connection details.

WARNING

Never route control wiring through the same conduit as power supply wiring.

5.10.1 Thermostat

The RL heat pump can be controlled by most commonly available single-stage heat pump thermostats.

The reversing valve on the RL series is energized when the unit is in cooling mode. Position thermostats on an interior wall away from supply ducts.

Avoid external walls and locations subject to direct sunlight and drafts. Thermostat wiring must be 18AWG (American Wire Gauge). Refer to the installation instructions of the thermostats for further details.

Refer to the installation instructions for the thermostat for further details.

NOTICE

To prevent voltage drops in the control circuit, do not exceed the recommended thermostat wire lengths detailed in Table 5.

Connection	Function
Y1	First-Stage Compressor Operation
G	Fan
O	Reversing Valve (energized in cooling)
W1	Auxiliary Electric Heat (runs in conjunction with compressor)
NC	Transformer 24 VAC Common (extra connection)
C1	Transformer 24 VAC Common (primary connection)
R	Transformer 24 VAC Hot
H	Dehumidification Mode

Table 3 Unit Thermostat Connections

5.10.2 VA Capacity

The VA capacity of the transformer must be considered when connecting low-voltage accessories to the heat pump such as thermostats or solenoid valves. Table 4 shows the VA draw of factory-mounted components in the low-voltage heat pump. The total VA draw of the heat pump internal components plus attached accessories must be lower than the VA capacity of the unit control transformer.

WARNING

Exceeding the transformer capacity will result in low control voltage, erratic unit operation, or damage to the heat pump.

Low-Voltage VA Draw	
Component	**VA**
Blower Relay (PSC motors only)	10
Reversing Valve Solenoid	12
Compressor Contactor Single Phase	10
UPM Board	5
Total VA Draw	**37**

Table 4 Low-Voltage VA Draw

5.10.3 Thermostat to HVAC Equipment Wiring

The thermostat may not function properly if the total resistance of any of the thermostat to HVAC equipment wires exceeds 2.5 ohms. To ensure that wire length does not cause excess resistance, refer to Table 5 and ensure that the wires from the thermostat to the HVAC equipment are not too long.

Copper Wire Gauge	Maximum Wire Length
22 AWG (0,33mm^2)	46m (150 ft.)
20 AWG (0,50mm^2)	73m (240 ft.)
18 AWG (0,75mm^2)	117m (385 ft.)

Table 5 Length by Wire Gauge for Thermostat to HVAC Equipment Wiring

5.10.4 Remote Sensor to Programmable Thermostat

Because remote temperature sensors measure resistance, very long cable runs can cause slight errors in the measurement. For the highest temperature reading accuracy, avoid exceeding the maximum recommended wire lengths show in Table 6.

Copper Wire Gauge	Maximum Remote Sensor Wire Length
22 AWG (0,33mm^2)	1000 ft. (300m)
20 AWG (0,50mm^2)	1500 ft. (450m)
18 AWG (0,75mm^2)	2500 ft. (750m.)

Table 6 Length by Wire Gauge for Remote Sensor to Programmable Thermostat Wiring

6 Specific Application Considerations

6.1 Well Water Systems

(→Refer to Fig. 14)

→Refer to the Water Qualify Table on page #24 to ensure the water quality is suitably for use with water source equipment.

In conditions of brackish water or where moderate scale formation is anticipated, a cupro-nickel heat exchanger is required. In well water applications, water pressure must always be maintained in the heat exchanger to avoid insufficient water flow. This can be accomplished with a control valve or a bladder-type expansion tank. When using a single water well to supply both domestic water and the heat pump care must be taken to ensure that the well can provide sufficient flow for both. In well water applications a slow-closing solenoid valve must be used to prevent water hammer.

Connect the solenoid valves across Y1 and C1 on the interface board for all. Make sure that the VA draw of the valve does not exceed the contact rating of the thermostat.

6.2 Open Well Water Systems

When a water well is used exclusively for supplying water to the heat pump, operate the pump only when the Heat Pump operates. A 24 volt, double-pole single-throw (DP/ST) contactor can be used to operate the well pump with the heat pump. When two or more units are supplied from one well, the pump can be wired to operate independently from either unit. Two 24-volt double-pole single-trow relays wired in parallel are required. In either case, a larger sized VA transformer may be required.

The discharge water from the heat pump is not contaminated in any manner and can be disposed of in various ways depending on local codes (i.e., discharge well, dry well, storm sewer, drain field, stream, pond, etc.)

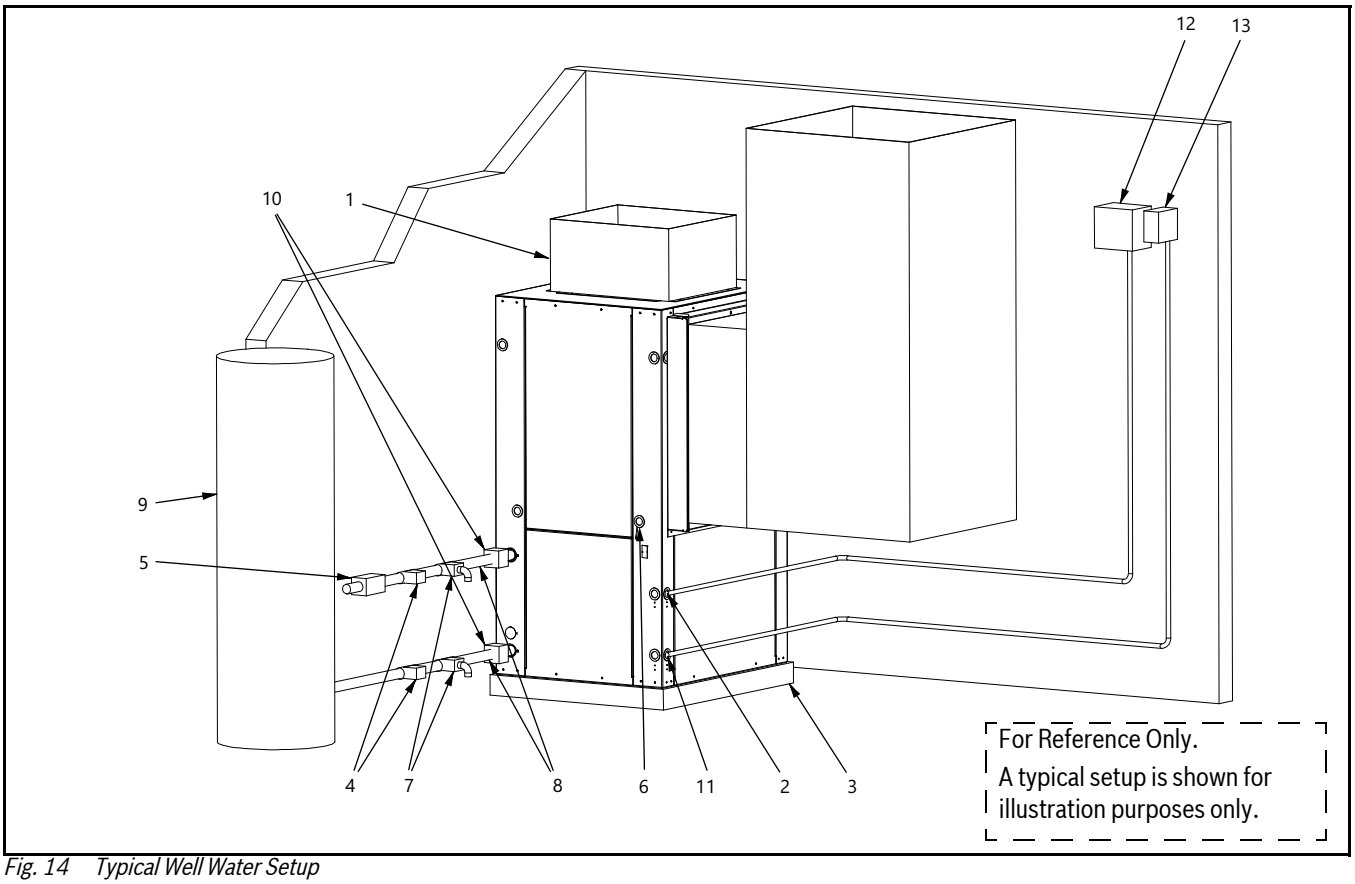

Fig. 14 Typical Well Water Setup

[1] Flex Duct Connection
[2] Low-Voltage Control Connection
[3] Vibration Pad
[4] Ball Valves
[5] Solenoid Valve Slow Closing
[6] Condensate Drain Connection
[7] Drain Valves
[8] Hose Kits (optional)
[9] Pressure Tank (optional)
[10] P/T Ports (optional)
[11] Line Voltage Connection
[12] Control Panel/Thermostat
[13] Unit Line Voltage Disconnect

6.3 Cooling Tower/Boiler Systems

(➔Refer to Fig. 15)

These systems typically use a common loop temperature maintained at 50°F to 100°F to ensure adequate cooling and heating performance.

In the cooling mode, heat is rejected from the unit into the water loop. A cooling tower provides cooling to the loop water thus maintaining a constant supply temperature to the unit. When utilizing open cooling towers, chemical water treatment is mandatory to ensure the water is free from corrosive elements. A secondary heat exchanger (plate frame) between the unit and the open cooling tower may also be used. It is imperative that all air be eliminated from the closed loop side of the heat exchanger to ensure against fouling. In the heating mode, heat is absorbed from the water loop. A boiler can be utilized to maintain the loop at the desired temperature.

NOTICE

Water piping exposed to extreme low ambient temperatures is subject to freezing.

To ensure against leaks and possible heat exchanger fouling, use an appropriate thread sealant.

➔Consult the dimensional drawings starting on page #57 for piping sizes.

To avoid possible vibration, use flexible hoses between the unit and the rigid system. For unit isolation and unit water-flow balancing, install ball valves in the supply and return lines.

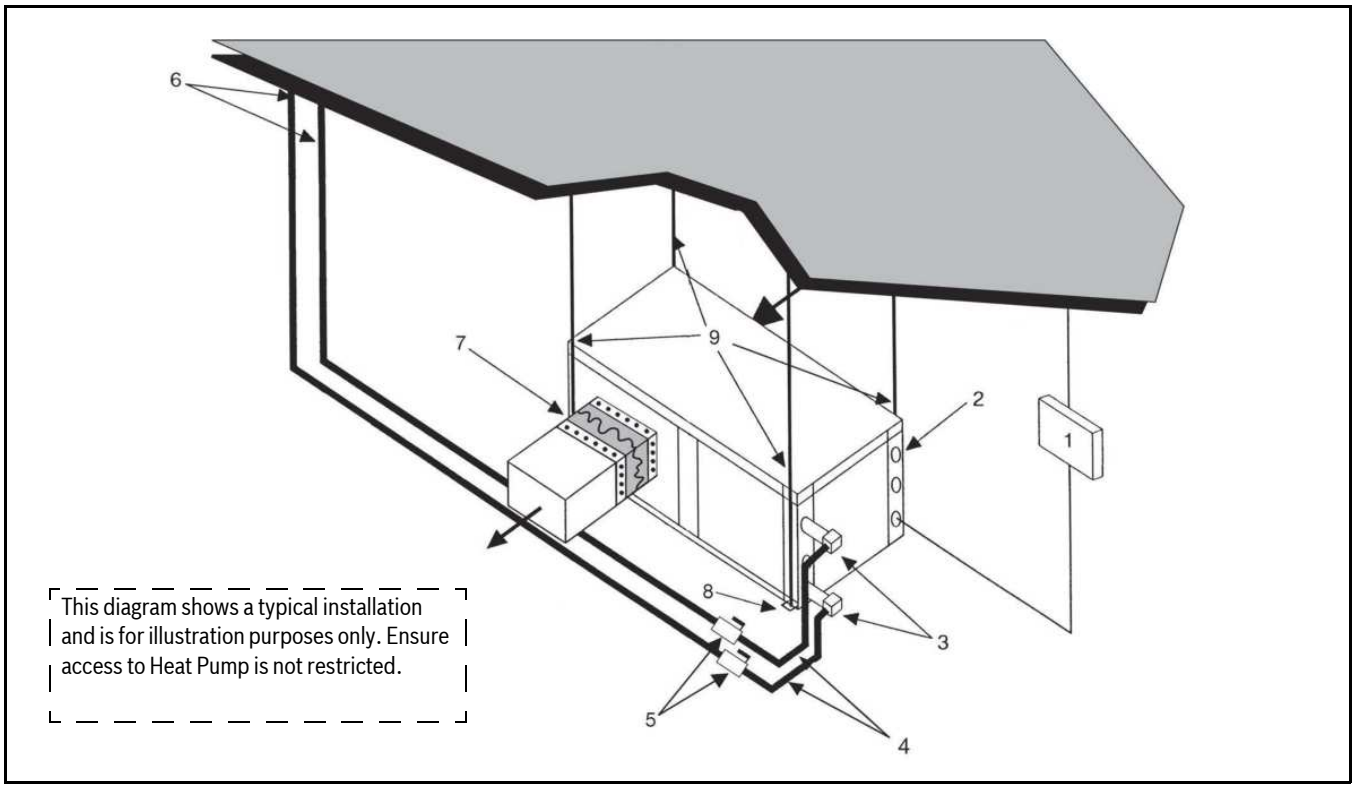

Fig. 15 Typical Cooling Tower and Boiler System Setup

[1] Line-Voltage Disconnect (unit)
[2] Low-Voltage Control Connection
[3] P/T Plugs (optional)
[4] Hose Kits
[5] Ball Valves
[6] Supply and Return Line of Central System
[7] Flex Duct Connection
[8] Hanging Bracket Assembly
[9] Threaded Rod

6.4 Geothermal Closed-Loop Systems

(➔Refer to Fig. 16)

Operation of an RL Series unit on a closed loop application requires the extended range option.

NOTICE

Closed-loop and pond applications require specialized design knowledge and specialized training.

Use the Ground Loop Pumping Package (GLP) makes the installation easier. Anti-freeze solutions must be used low loop temperatures are expected to occur.

Refer to the GLP installation manuals for more specific instructions.

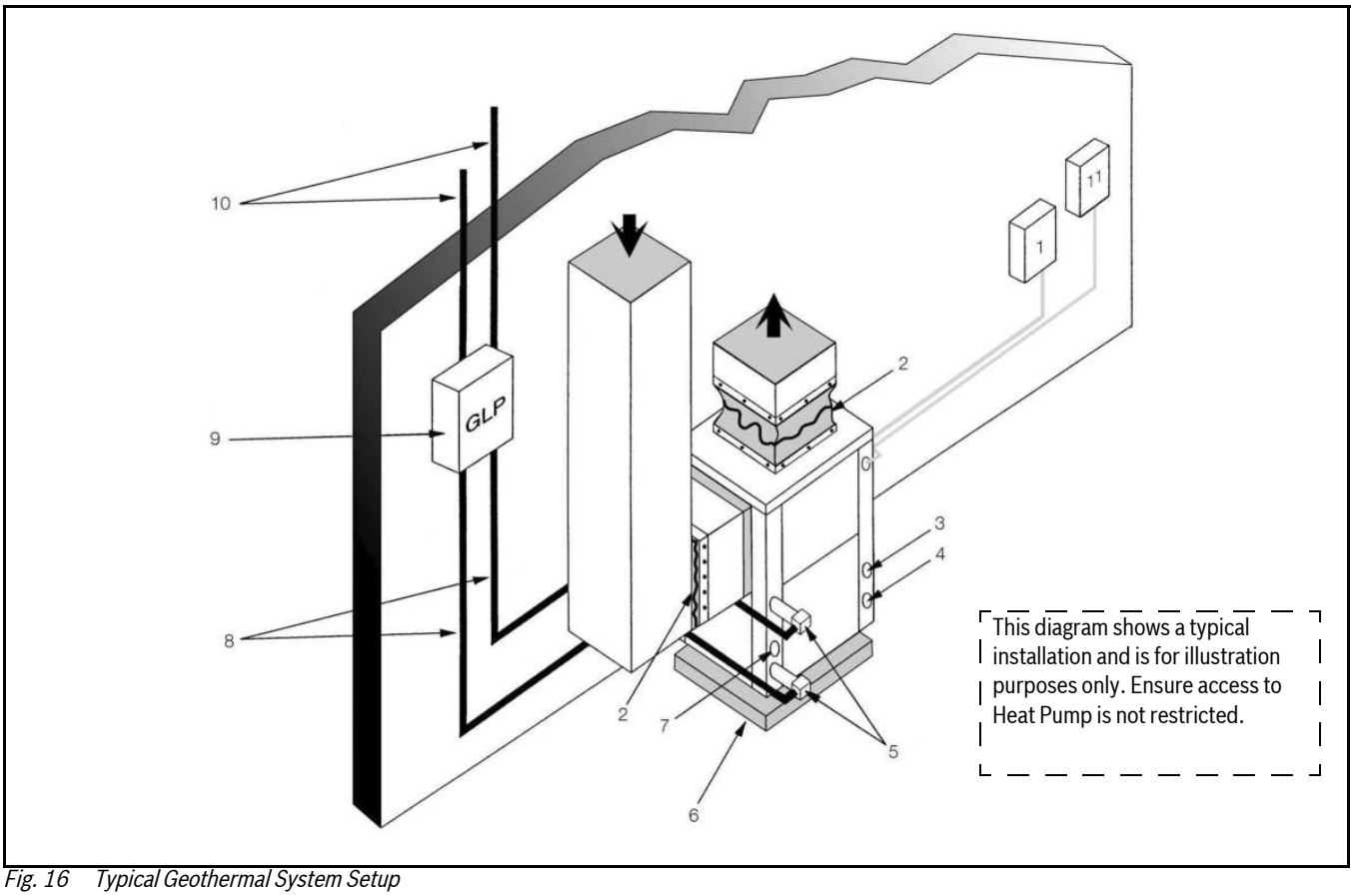

Fig. 16 Typical Geothermal System Setup

[1] Line-Voltage Disconnect (unit)
[2] Flex Duct Connection
[3] Low-Voltage Control Connection
[4] Line-Voltage Connection (unit)
[5] P/T ports
[6] Vibration Pad
[7] Condensate Drain Connection
[8] Ground Loop Connection Kit
[9] Ground Loop Pumping Package
[10] Polyethylene with Insulation

7 Water-Quality Considerations

NOTICE

Failure to ensure proper water quality and flow rates can shorten the life of the heat pump and potentially void the unit warranty.

Maintaining proper water quality is required to ensure proper operation of the heat pump. (→Refer to the Water Quality Table on page #24.)

For closed loop and boiler/cooling tower systems, water chemistry must be checked and maintained to ensure that corrosive elements, dissolved oxygen, and pH levels are kept in check. It is important to be sure that any additive, antifreeze, or corrosion inhibitor that is added to the water loop is compliant with all applicable laws and regulations and is compatible with copper, brass, and bronze alloys. Ensure that all recommended safety precautions are followed when handling or adding chemicals to the water loop.

For open loop systems, water quality is very important. Table 7 shows acceptable ranges for a variety of water quality factors. The three main concerns in open loop installations are scaling, corrosion, and fouling.

In installations with hard water, scaling due to a buildup of carbonates on the heat exchanger wall can gradually degrade the heat pump performance over time. Heat pumps that are affected by scaling may exhibit low suction pressures in heating and high head pressures in cooling with a gradual loss of capacity and efficiency. Scaled heat exchangers can be cleaned by a qualified technician but care should be taken to avoid scaling in the first place. To limit scaling, water flow rates should be kept at 3 gallons/minute per nominal cooling ton (a 10°F temperature rise in cooling) and care should be taken to avoid air in the water lines from suction side leaks.

In installations with high hydrogen sulfide, chlorine or ammonia, corrosion is a potential problem. In these installations a cupro-nickel heat exchanger is required along with maintaining proper flow and keeping air out of the system. If water quality is outside of the values in the water quality table, then a closed loop is required. Fouling due to iron bacteria can also pose problems in some open loop installations. Iron bacteria fouling can quickly degrade system performance and plug heat exchangers.

Air in the water system will greatly accelerate the fouling or corrosion process.

Water Quality			
Potential Problem	Water Characteristic	Acceptable Value	
		Copper	Cupro-Nickel
	pH (Acidity/Alkalinity)	7–9	7–9
Scaling	Hardness ($CaCO_3$, $MgCO_3$)	< 350 ppm	< 350 ppm
	Ryznar Stability Index	6.0–7.5	6.0–7.5
	Langelier Saturation Index	-0.5 – +0.5	-0.5 – +0.5
Corrosion	Hydrogen Sulfide (H_2S)	< 0.5 ppm*	10–50 ppm
	Sulfates	< 125 ppm	< 125 ppm
	Chlorine	< 0.5 ppm	< 0.5 ppm
	Chlorides	< 20 ppm	< 150 ppm
	Carbon Dioxide	< 50 ppm	< 50 ppm
	Ammonia	< 2 ppm	< 2 ppm
	Ammonia Chloride	< 0.5 ppm	< 0.5 ppm
	Ammonia Nitrate	< 0.5 ppm	< 0.5 ppm
	Ammonia Hydroxide	< 0.5 ppm	< 0.5 ppm
	Ammonia Sulfate	< 0.5 ppm	< 0.5 ppm
	Dissolved Solids	< 1,000 ppm	< 1,500 ppm
Iron Fouling	Iron (Fe_2+ Iron Bacteria Potential)	< 0.2 ppm	< 0.2 ppm
	Iron Oxide	< 1 ppm	< 1 ppm
Erosion	Suspended Solids	< 10 ppm, < 600 µm size**	< 10 ppm, < 600 µm size**
	Maximum Water Velocity	6 ft/sec	6 ft/sec
* No "rotten egg" smell present at < 0.5 ppm H_2S.			
** Equivalent to 30 mesh strainer			

Table 7 Water Quality Table

8 Post-Installation System Checkout

After completing the installation and before energizing the unit, the following system checks MUST be made:

1. Verify that the supply voltage to the heat pump is in accordance with the nameplate ratings.
2. Make sure that all electrical connections are tight and secure.
3. Check the electrical fusing and wiring for the correct size.

DANGER

Ensure the cabinet and electrical box are properly grounded.

4. Verify that the low-voltage wiring between the thermostat and the unit is correct.
5. Verify that the water piping is complete and correct.
6. Check that the water flow is correct and adjust if necessary.
7. Check the blower for free rotation and that it is secured to the shaft.
8. Verify that vibration isolation has been provided.
9. Confirm that all access panels are secured in place.
10. Verify that duct work has been properly fastened to supply and return duct collars.
11. Make sure return air filters are positioned correctly in the filter rack if removed during installation.

9 Pre-Start-Up

9.1 Air Coil

To obtain maximum performance, clean the air coil before starting the unit. A 10% solution of dishwasher detergent and water is recommended for both sides of the coil. Rinse thoroughly with water.

9.2 Checking Scroll Compressor Rotation

Scroll compressors, like the ones used on the CL series, are phase sensitive. When out of phase, the compressors will run in reverse. After a few minutes of reverse operation, a scroll compressor internal overload protection will open, activating the unit lockout. (This requires a manual reset. To reset, power cycle the unit.)

NOTICE

A compressor running in reverse has a noisier than normal operation and a lower current draw than its rated value.

This means that for proper operation, the correct direction of rotation must be ensured. The most accurate way to ascertain this is through the use of gauges. Follow the steps below when using gauges:

1. Connect service gauges to the suction and discharge pressure fittings.
2. Energize the compressor.

The suction pressure should drop and the discharge pressure should rise, as is normal on any start up. If the suction pressure does not drop and the discharge pressure does not rise to normal levels, follow the steps in 9.2.1 Correcting Direction of Rotation.

Alternatively, in locations with multiple units attached to the same branch circuit, where it is difficult to place pressure gauges on all them, and several units are determined to be phased incorrectly:

1. Install pressure gauges and a phase rotation meter on one system to serve as a baseline.
2. Check the remaining systems with the phase rotation meter.
3. Follow the steps in 9.2.1 to make corrections.

9.2.1 Correcting Direction of Rotation

If you determine that the entire job site has a concern with electrical phasing, contact the utility company to ensure phasing is corrected.

1. Turn OFF power to the unit. (Always follow your Lock-out/Tag-out procedure.)
2. Reverse any two of the unit power leads.
3. Reapply power to the unit and verify pressures are correct.

The suction and discharge pressure levels should now move to their normal start-up levels.

NOTICE

Do not use fan rotation as an indication of the unit's phase being correctly wired, as fans are always single phase.

There is a time delay before the compressor will start.

10 Start-up

Use the procedure below to initiate a proper start-up.

DANGER

Electrical Shock!

Disconnect switch is only to be closed when the electrical box cover is secured to electrical box and all exterior panels are secured on the unit.

1. Restore power to system.
2. Turn thermostat fan position to ON. Blower should start.
3. Balance airflow at registers.
4. Adjust all valves to the full-open position and turn ON the line power to the heat pump unit.
5. Operate unit in the cooling cycle first, then the heating cycle for unit operating limits. Allow 15 minutes between cooling and heating tests for pressure to equalize.

10.1 Unit Start Up Cooling Mode

1. Adjust the unit thermostat to the warmest position. Slowly reduce the thermostat position until the compressor activates.
2. Check for cool air delivery at unit grille a few minutes after the unit has begun to operate.
3. Verify that the compressor is ON and that the water flow rate is correct by measuring pressure drop through the heat exchanger using P/T plugs.
4. Check elevation and cleanliness of the condensate lines; any dripping could be a sign of a blocked line. Be sure the condensate trap includes a water seal.
5. Check the temperature of both supply and discharge water.
6. Check air temperature drop across the coil when compressor is operating. Air temperature drop should be between 15° and 25°F.

10.2 Unit Start Up Heating Mode

Operate the unit in heating cycle after checking the cooling cycle. Allow five minutes between tests for the pressure or reversing valve to equalize.

1. Turn thermostat to lowest setting and set thermostat switch to HEAT position.
2. Slowly turn the thermostat to a higher temperature until the compressor activates.
3. Check for warm air delivery at the unit grille within a few minutes after the unit has begun to operate.
4. Check the temperature of both supply and discharge water. If temperature is within range, proceed. If temperature is outside the range, check the heating refrigerant pressures.
5. Once the unit has begun to run, check for warm air delivery at the unit grille.
6. Check air temperature rise across the coil when compressor is operating. Air temperature rise should be between 20°F and 30°F after 15 minutes load.
7. Check for vibration, noise, and water leaks.

11 Commissioning

Record all system vitals using the “checkout sheet” and keep with equipment. (➔See page #63.)

12 Safety Devices and the UPM Controller Overview

RL models are equipped with the Unit Protection Module (UPM) that controls the compressor operation and monitors the safety.

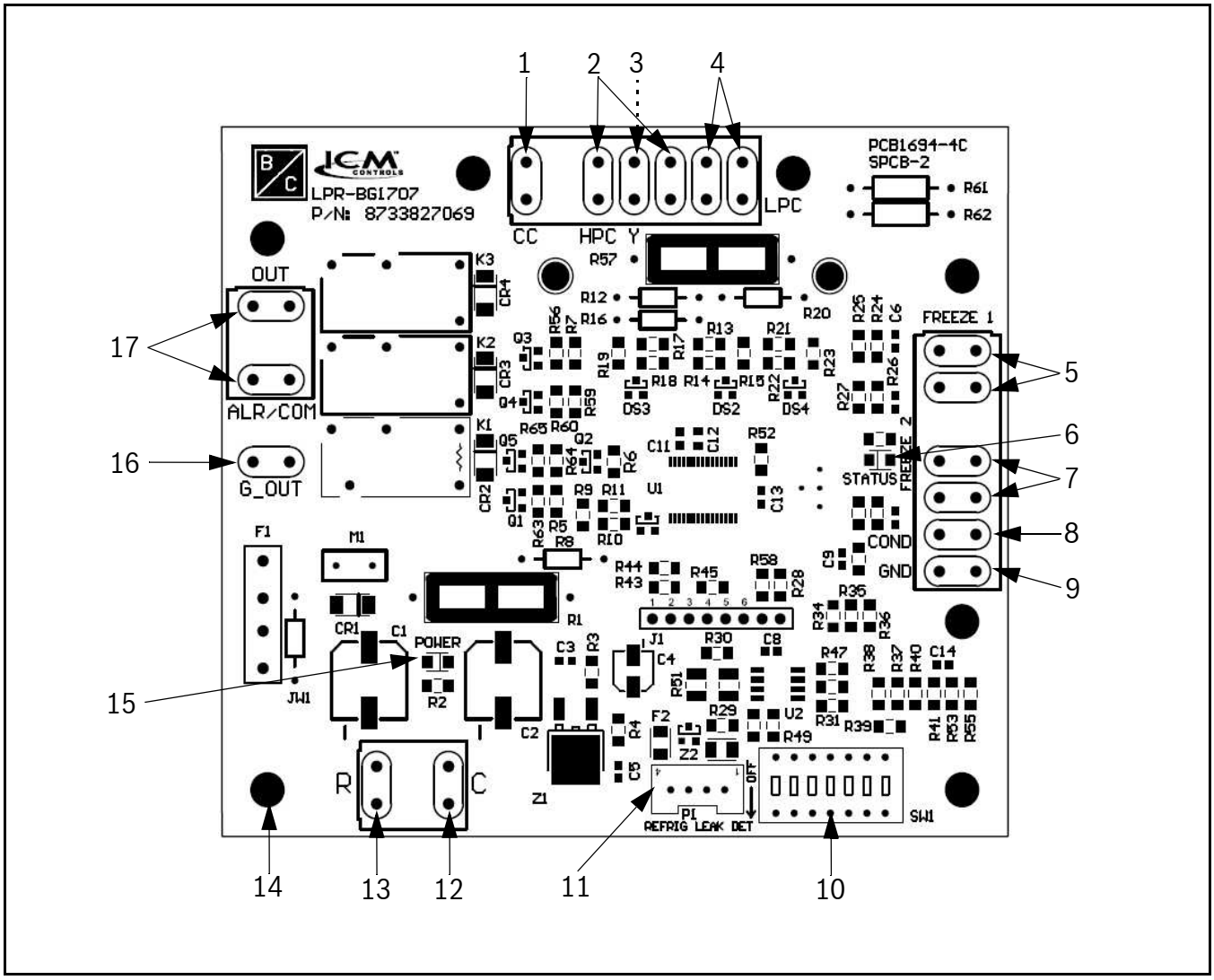

Fig. 17 UPM Controller Board

[1] Compressor Contact Output
[2] High-Pressure Switch Connection
[3] Call for Compressor (Y1)
[4] Low-Pressure Switch Connection
[5] Water Coil Freeze Connection (FREEZE 1)
[6] UPM Status LED Indicator (Fault Status)
[7] Air Coil Freeze Connection (FREEZE 2)
[8] Condensate Overflow Sensor Connection
[9] Ground
[10] UPM Settings DIP Switch (SW1)
[11] A2L Sensor
[12] 24VAC Power Common
[13] 24VAC Power Input
[14] UPM Standoff
[15] Power LED
[16] Fan (Fan in the event of an A2L leakage)
[17] Dry Contact

When a malfunction light is used for diagnostic purposes, the connection is made at the dry contact connection terminals of the UPM board.

If the thermostat is provided with a malfunction light powered off of the common (C) side of the transformer, a jumper between “R” and “COM” terminal of “ALR” contacts must be installed.

Each unit is factory equipped with a UPM that controls the compressor operation and monitors the safety controls that protect the unit.

Safety controls include the following:

- High-pressure switch located in the refrigerant discharge line and wired across the HPC (High-Pressure Switch Connection) terminals on the UPM.
- Low-pressure switch located in the unit refrigerant suction line and wired across the LPC (Low-Pressure Switch Connection) terminals (LPC1 and LPC2) on the UPM.
- Waterside freeze protection sensor (FREEZE 1), mounted close to condensing water coil (➔Refer to Fig. 18), monitors refrigerant temperature between condensing water coil and thermal expansion valve. If temperature drops below or remains at freeze limit trip for 120 seconds, the controller will shut down the compressor and enter into a soft-lockout condition. The default freeze limit trip is 25°F; however, this can be changed by flipping DIP switch SW1. (➔Refer to Fig. 17, item [10].)(➔Refer to Fig. 20.)

The UPM Board Dry Contacts are Normally Open (NO).

NOTICE

If the unit is employing a fresh water system (no anti-freeze protection), it is extremely important to have the Freeze 1 set to 25°F (DIP Switch SW1 set to OFF) in order to shut down the unit at the appropriate leaving water temperature and protect your heat pump from freezing if a freeze sensor is included.

- Air coil freeze protection sensor (FREEZE 2), mounted between the thermal expansion device and the air coil (➔Refer to Fig. 19), monitors refrigerant temperature between the air coil and thermal expansion valve. If temperature drops below or remains at the freeze limit trip for 30 seconds, the controller will shut down the compressor and enter into a soft-lockout condition. The default freeze limit trip is 25°F.

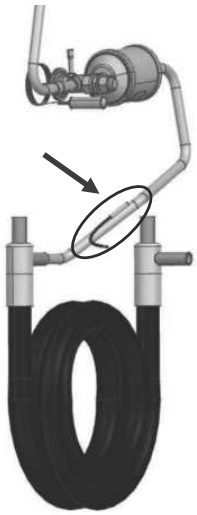

Note: Vertical (VT) Configuration Depicted

Fig. 18 Waterside Freeze Protection Sensor Location (FREEZE 1)

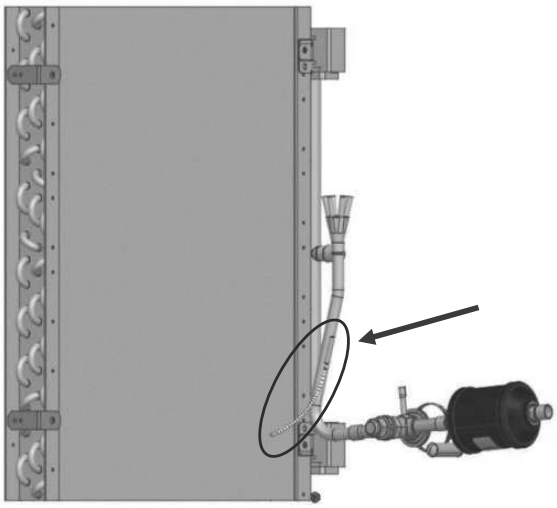

Note: Vertical (VT) Configuration Depicted

Fig. 19 Air Coil Freeze Protection Sensor Location (FREEZE 2)

- The condensate overflow protection sensor is located in the drain pan of the unit and connected to the “COND” terminal on the UPM board. (➔Refer to Fig. 17, item [8].)

12.1 UPM Default Settings and DIP Switch Positions

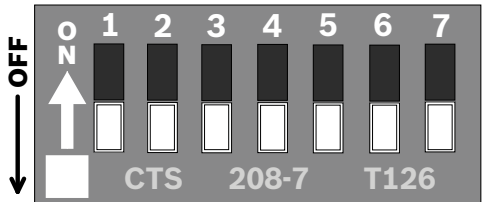

Fig. 20 UPM Settings DIP Switch (SW1)

UPM DIP Switch Selectable Positions				
Position	**Function**	**ON**	**OFF**	**Factory Default**
1	Lockout	4	2	2
2	Reset	R	Y	Y
3	Alarm	Cont	Pulse	Pulse
4	Test	Yes	No	No
5	Freeze 1	15°F	25°F	25°F
6	Freeze 2	15°F	25°F	25°F
7	Pump	ON	OFF	OFF

Table 8 UPM DIP Switch Selectable Positions

12.2 UPM Board Features

The UPM Board includes the following features:

- **ANTI-SHORT CYCLE TIMER:** Five-minute delay on break timer to prevent compressor short cycling.

- **RANDOM START:** Each controller has an unique random start delay ranging from 270 to 300 seconds on initial power up to reduce the chance of multiple unit simultaneously starting at the same time after power up or after a power interruption, in order to avoid creating a large electrical spike.

- **TEST DIP SWITCH:** The DIP switch position “4” controls the Test function. When it is set to “ON,” it will reduce all time delays settings to 10 seconds during troubleshooting or verification of unit operation. (➔Refer to Fig. 17, item [10]) (➔Refer to Fig. 20)

NOTICE

Operation of unit in test mode can lead to accelerated wear and premature failure of components. The "TEST" switch must be set back to "NO" after troubleshooting/servicing.

- **LOW-PRESSURE BYPASS TIMER:** If the compressor is running and the low-pressure switch opens, the controller will keep the compressor ON for 120 seconds. After two minutes if the low-pressure switch remains open, the controllers will shut down the compressor and enter a soft lockout. The compressor will not be energized until the low-pressure switch closes and the anti-short cycle time delay expires. If the low-pressure switch opens two or four times in one hour, the unit will enter a hard lockout. In order to exit hard lockout power to the unit would need to be reset. The reset signal is either a Y or R signal depending on if DIP switch position “2” is set to ON or OFF. (➔See Table 8) If the reset is set to ON, the board must be manually powered OFF and powered back ON to exit the hard lock out.

- **BROWNOUT/SURGE/POWER INTERRUPTION PROTECTION:** The brownout protection in the UPM board will shut down the compressor if the incoming power falls below 18 VAC. The compressor will remain OFF until the voltage is above 18 VAC and ANTI-SHORT CYCLE TIMER (300 seconds) times out. The unit will not go into a hard lockout.

- **MALFUNCTION OUTPUT:** Alarm output is Normally Open (NO) dry contact. If pulse is selected the alarm output will be pulsed. The fault output will depend on the DIP switch setting for "ALARM." (➔Refer to Fig. 17, item [10]) (➔Refer to Fig. 20.) If DIP switch position “3” is set to “ON,” a constant signal will be produced to indicate a fault has occurred and the unit requires inspection to determine the type of fault. If it is set to “OFF," a pulse signal is produced and a fault code is detected by a remote device indicating the fault. (➔For blink code explanation, see Table 9.) The remote device must have a malfunction detection capability when the UPM board is set to "PULSE."

Blinks	Fault	Fault Criteria
None	None	All fault conditions normal.
1	High Pressure	Refrigerant discharge pressure has exceeded 600 PSIG.
2	Low Pressure	Refrigerant suction pressure has fallen below 40 PSIG.
3	Water Coil Freeze Condition	Refrigerant temperature to the water coil has fallen below 25°F for 120 seconds.
4	Condensate Overflow	Condensate levels in the unit drain pan are too high.
5	Brown Out	Control voltage has fallen below 18 VAC.
6	Air Coil Freeze Condition	Refrigerant temperature to the air coil has fallen below 25°F for 120 seconds.
7	Refrigerant Leak Fault	Refrigerant LFL% is more than 15%.

Table 9 UPM Fault Blink Codes

- **FREEZE SENSOR:** The default setting for the freeze limit trip is 25°F (FREEZE 1); however, this can be changed to 15°F by flipping the DIP switch position "5" (➔Refer to Fig. 17, item [10]) (➔Refer to Fig. 20), freeze limit trip should only be changed to 15°F when a closed loop system with appropriate antifreeze mixture is used. **Since Freeze Sensor 2 is dedicated to monitor the load side coil it is recommended to leave the factory default setting on the board.** The UPM controller will constantly monitor the refrigerant temperature with the sensor (FREEZE 1) mounted close to the condensing water coil between the thermal expansion valve and water coil. If temperature drops below or remains at the freeze-limit trip for 120 seconds, the controller will shut the compressor down and enter into a soft-lockout condition. Both the status LED and the alarm contact will be active. The status LED will be active, blinking the fault code. The LED will flash (three times) the code associated with this alarm condition. If this alarm occurs two times (or four if DIP switch position "1" is set to "ON") within an hour the UPM controller will enter into a hard-lockout condition. It will constantly monitor the refrigerant temperature with the sensor (FREEZE 2) mounted close to the air coil between the thermal expansion valve and air coil as shown in Fig. 19. If temperature drops below or remains at the freeze limit trip for 120 seconds, the controller will shut the compressor down and enter into a soft-lockout condition. Both the status LED and the alarm contact will be active. The status LED will be active, blinking the fault code. The LED will flash six times the code associated with this alarm condition. If this alarm occurs two times (or four times if DIP switch position "1" is set to "ON") within an hour the controller will enter into a hard-lockout condition.

NOTICE

The freeze sensor (FREEZE 1) will not guard against the loss of water. A flow switch is recommended to prevent the unit from running if water flow is lost or reduced.

- **INTELLIGENT RESET:** If a fault condition is initiated, the five-minute delay on break time period is initiated and the unit will restart after these delays expire. During this period the fault LED will indicate the cause of the fault. If the fault condition still exists or occurs two or four times (depending if the Lockout DIP switch position "1" is set to "OFF" or "ON") (➔See Table 8) before 60 minutes, the unit will go into a hard lockout and requires a manual lockout reset.

- **LOCKOUT RESET:** The method to exit a hard lockout depends of the Reset DIP switch setting:
  - To clear a hard lockout when the DIP switch position "2" is set to "OFF" (Y), power can be cycled OFF then back ON either at the unit's thermostat or at the circuit breaker.
  - To clear a hard lockout when the DIP switch position "2" is set to "ON" (R), power must be cycled OFF then back ON at the circuit breaker (not at the thermostat).

  (➔Refer to Fig. 17, item [10]) (➔Refer to Fig. 20)

The blower motor will remain active during a lockout condition.

- **PUMP DIP SWITCH:** When DIP switch position "7" is set to "ON" and no Y call has been received in the past 8 hours, the compressor will have a delay of 30 seconds to allow a loop pump to circulate water before compressor starts. (➔Refer to Fig. 17, item [10]) (➔Refer to Fig. 20)

12.3 UPM Sequence of Operation

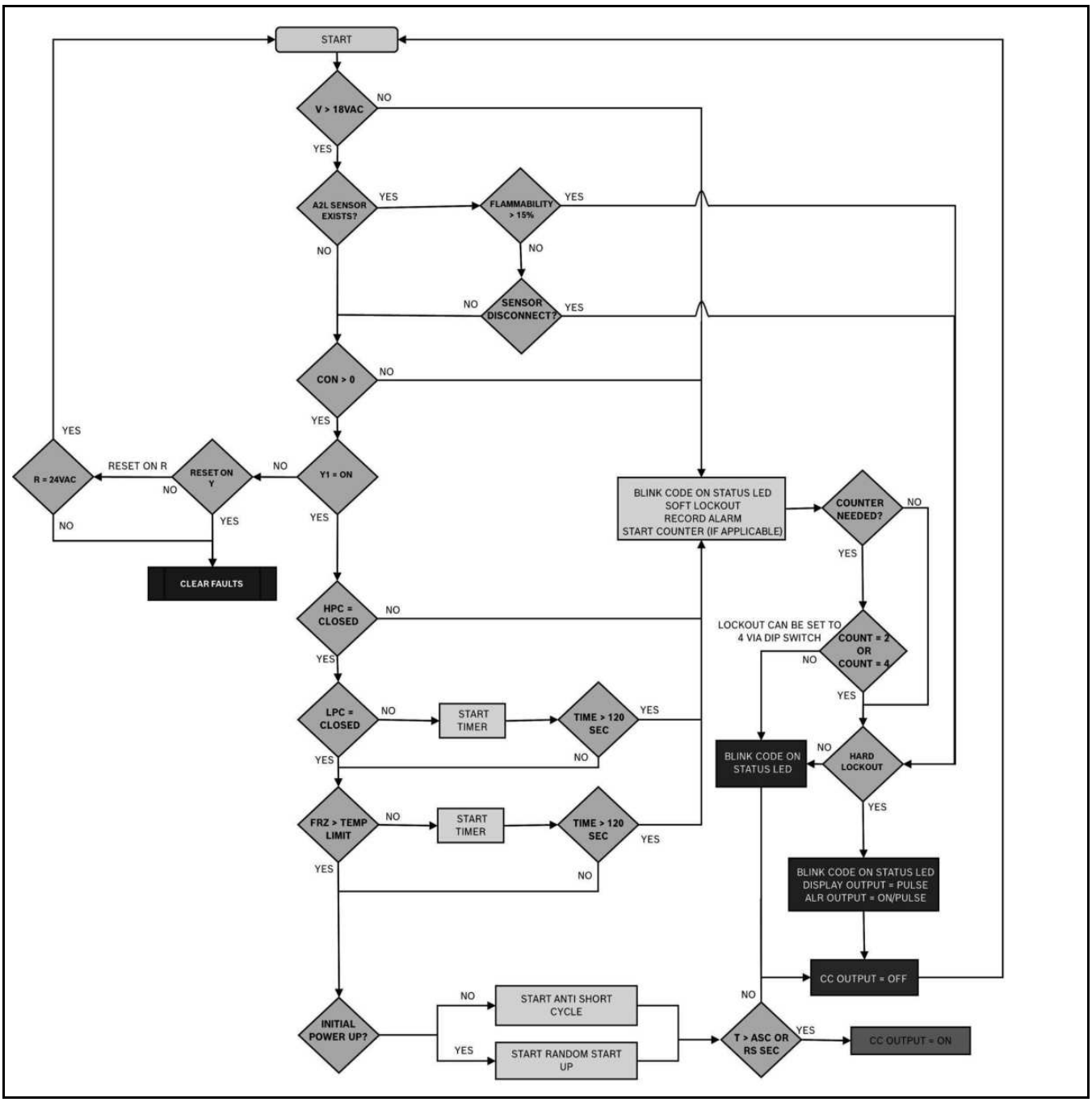

Fig. 21 UPM Sequence of Operation Flowchart

13 Fan Motor

13.1 Permanent Split Capacitor Motors (PSC)

The standard motor for all RL series heat pumps is a three-speed PSC motor. If a speed change is required, follow the instructions below:

1. Disconnect power to the heat pump.
2. For units with leaded motors, remove the front access cover.
3. Remove the fan speed wire from the fan relay. Clip the ¼" quick connect from the lead and cap the unused lead.
4. Uncap the desired fan speed wire and terminate with a ¼" quick connect. Connect to the fan relay.

Refer to the PSC motor performance tables below for heat pump blower performance with the PSC motor option.

13.1.1 PSC Motor Performance Data—Vertical Configuration

Model	Fan Speed	Default Factory Motor Setting	CFM											
			0.10	0.20	0.30	0.40	0.50	0.60	0.70	0.80	0.90	1.00	1.10	1.20
RL007	Low		289	267	244	213	—	—	—	—	—	—	—	—
	Med.	X	335	309	283	251	215	—	—	—	—	—	—	—
	High		347	320	294	262	225	185	—	—	—	—	—	—
RL009	Low		294	281	267	248	—	—	—	—	—	—	—	—
	Med.	X	379	360	340	316	289	—	—	—	—	—	—	—
	High		414	391	369	343	314	284	—	—	—	—	—	—
RL012	Low		294	281	267	248	—	—	—	—	—	—	—	—
	Med.		379	360	340	316	289	—	—	—	—	—	—	—
	High	X	414	391	369	343	314	284	—	—	—	—	—	—
RL015	Low		542	519	469	437	415	375	—	—	—	—	—	—
	Med.		621	598	546	497	452	424	360	—	—	—	—	—
	High	X	814	774	733	602	545	500	449	366	—	—	—	—
RL018	Low		542	519	469	437	415	375	—	—	—	—	—	—
	Med.		621	598	546	497	452	424	360	—	—	—	—	—
	High	X	814	774	733	602	545	500	449	366	—	—	—	—
RL024	Low		730	723	703	679	637	544	493	—	—	—	—	—
	Med.		821	808	787	757	720	667	535	479	—	—	—	—
	High	X	1019	972	943	890	840	779	696	535	473	—	—	—
RL030	Low		730	723	703	679	637	544	493	412	—	—	—	—
	Med.		821	808	787	757	720	667	535	479	—	—	—	—
	High	X	1019	972	943	890	840	779	696	535	473	—	—	—
RL036 (208/230, 460V)	Low		1178	1139	1097	1052	998	935	863	—	—	—	—	—
	Med.		1250	1204	1158	1108	1052	987	912	826	—	—	—	—
	High	X	1289	1240	1194	1142	1082	1017	945	857	—	—	—	—
RL036 (265V)	Low		1022	1013	988	953	884	805	750	684	—	—	—	—
	Med.		1221	1193	1156	1118	1059	964	837	772	—	—	—	—
	High	X	1353	1304	1261	1206	1147	1062	887	808	—	—	—	—
RL042	Low		963	999	1016	1013	996	995	860	—	—	—	—	—
	Med.		1237	1243	1263	1260	1243	1215	1103	—	—	—	—	—
	High	X	1561	1559	1547	1520	1480	1426	1357	1165	—	—	—	—
RL048	Low		1424	1422	1410	1393	1364	1327	1273	1210	1124	—	—	—
	Med.		1677	1662	1633	1590	1538	1481	1407	1324	1229	—	—	—
	High	X	1953	1896	1847	1778	1704	1609	1515	1422	1319	1167	—	—
RL060	Low		1646	1636	1627	1592	1573	1540	1505	1462	1415	1397	—	—
	Med.		1832	1819	1806	1793	1746	1711	1659	1619	1553	1501	1417	—
	High	X	2081	2076	2029	2008	1976	1934	1876	1812	1740	1659	1575	—
RL070	Low		1593	1586	1587	1576	1572	1561	1563	1550	1534	1504	1459	1411
	Med.		1776	1777	1774	1778	1776	1756	1749	1733	1728	1684	1659	1606
	High	X	2028	2033	2029	2029	2030	2029	2024	1991	1969	1943	1906	1852

Table 10 PSC Motor Performance Data—Vertical Configuration

13.1.2 PSC Motor Performance Data—Horizontal Configuration

Model	Fan Speed	Default Factory Motor Setting	CFM											
			0.10	0.20	0.30	0.40	0.50	0.60	0.70	0.80	0.90	1.00	1.10	1.20
RL007	Low		296	285	271	254	235	–	–	–	–	–	–	–
	Med.	X	410	391	373	349	321	–	–	–	–	–	–	–
	High		465	442	420	393	360	–	–	–	–	–	–	–
RL009	Low		296	281	266	244	–	–	–	–	–	–	–	–
	Med.	X	393	373	347	323	293	255	223	–	–	–	–	–
	High		424	401	373	345	314	279	238	196	–	–	–	–
RL012	Low		296	281	266	244	–	–	–	–	–	–	–	–
	Med.		393	373	347	323	293	255	223	–	–	–	–	–
	High	X	424	401	373	345	314	279	238	196	–	–	–	–
RL015	Low		542	519	469	437	415	375	–	–	–	–	–	–
	Med.		621	598	546	497	452	424	360	–	–	–	–	–
	High	X	814	774	733	602	545	500	449	366	–	–	–	–
RL018	Low		542	519	469	437	415	375	–	–	–	–	–	–
	Med.		621	598	546	497	452	424	360	–	–	–	–	–
	High	X	814	774	733	602	545	500	449	336	–	–	–	–
RL024	Low		1010	965	923	878	811	625	–	–	–	–	–	–
	Med.		1079	1016	967	912	851	721	568	–	–	–	–	–
	High	X	1118	1060	1000	949	888	795	586	561	–	–	–	–
RL030	Low		1010	965	923	878	811	625	–	–	–	–	–	–
	Med.	X	1079	1016	967	912	851	721	568	–	–	–	–	–
	Hiigh		1118	1060	1000	949	888	795	586	561	–	–	–	–
RL036	Low		1027	1029	1024	1010	930	922	912	857	786	689	–	–
	Med.		1282	1272	1245	1217	1168	1026	1001	971	904	796	–	–
	High	X	1535	1497	1444	1384	1315	1250	1034	1026	979	887	–	–
RL042	Low		1279	1248	1212	1161	1087	992	853	801	744	675	–	–
	Med.		1465	1414	1365	1301	1240	1097	917	846	774	702	–	–
	High	X	1569	1509	1418	1358	1298	1189	995	869	816	741	–	–
RL048	Low		1399	1388	1377	1359	1327	1284	1245	1173	1106	883	–	–
	Med.		1651	1605	1562	1525	1481	1420	1362	1293	1209	1101	–	–
	High	X	1816	1764	1712	1660	1590	1519	1446	1367	1284	1198	–	–
RL060	Low		1639	1620	1597	1565	1529	1482	1424	1358	1276	1194	1100	994
	Med.		1812	1789	1737	1698	1653	1600	1539	1472	1388	1267	1187	1076
	High	X	2022	1976	1937	1887	1833	1771	1704	1628	1543	1443	1309	1193
RL070	Low		1636	1626	1611	1607	1591	1571	1540	1506	–	–	–	–
	Med.		1822	1822	1814	1793	1777	1756	1724	1675	1626	1562	–	–
	High	X	2092	2082	2068	2045	2020	1968	1932	1878	1815	1730	1640	1525

Table 11 PSC Motor Performance Data—Horizontal Configuration

14 Maintenance

WARNING

Personal Injury Hazard!

Servicing of this equipment can be hazardous due to system pressure and electrical components. Only trained and qualified personnel should install, repair, or service the equipment.

DANGER

Electric Shock!

Before performing service or maintenance operations on the system, turn OFF main power to the unit. Electrical shock will cause personal injury or death.

14.1 Filter Changes

Filter changes or cleaning are required at regular intervals. The time period between filter changes will depend upon type of environment where the equipment is used. In a single-family home that is not under construction, changing or cleaning the filter every 60 days is sufficient. In other applications such as motels where daily vacuuming produces a large amount of lint, filter changes may need to be as frequent as bi-weekly.

14.2 Annual Checkup

An annual "checkup" by a trained and qualified HVAC mechanic is required. Complete the check-out sheet on page #63 when performing the annual maintenance checkup. Record the performance measurements of volts, amps, and water temperature differences for both heating and cooling. This data should be compared to the information on the unit's data plate and the data taken at the original startup of the equipment.

14.3 Annual Condensate Drain Cleaning

Clean and flush the condensate drain annually to ensure proper drainage.

15 Handling Periodic Lockouts

Periodic lockouts almost always are caused by air or water flow problems. The lockout (shutdown) of the unit is a normal protective measure in the design of the equipment. If continual lockouts occur call a mechanic immediately and have them check for:

- water flow problems
- water temperature problems
- air flow problems, or
- air temperature problems.

Use of the pressure and temperature charts for the unit may be required to properly determine the cause.

16 Servicing and Repair Information

16.1 Personal Protective Equipment

Ensure that all personal protective equipment is available and being used correctly.

16.2 Confined Space Work

Work in confined spaces must be avoided.

16.3 Controlled Work Procedure

All work must be undertaken under a controlled procedure to minimize the risk of a flammable gas or vapor being present while the work is being performed.

16.4 Safety Checks

Prior to beginning work on systems containing flammable refrigerants, safety checks are necessary to ensure that the risk of ignition is minimized. The following precautions must be taken prior to conducting work on the refrigerating system.

16.4.1 Inform Everyone in the General Work Area

All maintenance staff and others working in the local area must be instructed on the nature of work being carried out.

16.4.2 Check for the Presence of Refrigerant

The area must be checked with an appropriate refrigerant detector prior to and during work, to ensure the technician is aware of potentially toxic or flammable atmospheres. Ensure that the leak detection equipment being used is suitable for use with R-454B refrigerant; *i.e.*, non-sparking, adequately sealed, or intrinsically safe.

16.4.3 Fire Extinguisher

If any hot work is to be conducted on the refrigerating equipment or any associated parts, appropriate fire-extinguishing equipment must be available on hand. Have a dry powder or CO_2 fire extinguisher adjacent to the charging area.

16.4.4 Ignition Sources

Ensure the following prior to the work taking place:

- ▶ The area around the equipment is to be surveyed to make sure that there are no flammable hazards or ignition risks.
- ▶ "No Smoking" signs must be posted.
- ▶ All possible ignition sources, including cigarette smoking, must be kept sufficiently far away from the site of installation, repair, removal, or disposal during which refrigerant may possibly be released and exposed to the surrounding area and the ignition sources.
- ▶ Ensure that any person carrying out work in relation to a refrigerating system that involves exposing any pipe work knows that they must NOT use any sources of ignition in such a manner that it may lead to the risk of fire or explosion.

16.4.5 Ventilated Area

Ensure that the area is in the open or that it is adequately ventilated before breaking into the system or conducting any hot work. The ventilation must safely disperse all released refrigerant, preferably expelling it externally into the atmosphere. The ventilation must be present during the period that the work is carried out.

16.4.6 Checks to the Refrigerating Equipment

Where electrical components are being changed, they must be fit for the purpose and to the correct specification. At all times the manufacturer's maintenance and service guidelines must be followed. If in doubt, consult Bosch service and support for assistance.

The following checks must be applied to installations using flammable refrigerants:

- ▶ Ensure the actual refrigerant charge is in accordance with the room size within which the refrigerant containing parts are installed.
- ▶ Ensure that the ventilation machinery and outlets are operating adequately and are not obstructed.
- ▶ Check the secondary circuit for the presence of refrigerant, if an indirect refrigerating circuit is being used.
- ▶ Ensure the markings on the equipment continues to be visible and legible. Markings and signs that are illegible must be corrected.
- ▶ Ensure the refrigerating pipes or components are installed in a position where they are unlikely to be exposed to any substance that may corrode refrigerant containing components, unless the components are constructed of materials that are inherently resistant to being corroded or are suitably protected against being so corroded.

16.5 Checks to Electrical Devices

Repair and maintenance to electrical components must include initial safety checks and component inspection procedures. If a fault exists that could compromise safety, then electrical supply must NOT be connected to the circuit until the safety fault is satisfactorily corrected. If the fault cannot be corrected immediately but it is necessary to continue operation, an adequate temporary solution must be used. This must be reported to the owner of the equipment, so all parties are advised.

The following are required initial safety checks:

- ▶ Ensure that capacitors are discharged—this must be done in a safe manner to avoid possibility of sparking.
- ▶ Ensure that no live-electrical components and wiring are exposed while charging, recovering, or purging the system.
- ▶ Ensure that there is continuity of earth bonding.

16.6 Repairs to Sealed Components

NOTICE

Sealed-electrical components must be replaced.

16.7 Repair to Intrinsically-Safe Components

NOTICE

Intrinsically-safe components must be replaced.

16.8 Check Cabling

Check that cabling will not be subject to wear, corrosion, excessive pressure, vibration, sharp edges, or any other adverse environmental effects. The check must also take into account the effects of aging or continual vibrations from sources such as compressors or fans.

16.9 Detection of Flammable Refrigerants

Under NO circumstances may potential sources of ignition be used in the searching for or detection of refrigerant leaks. A halide torch (or any other detector using a naked flame) must NOT be used.

The following leak-detection methods are deemed acceptable for all refrigerant systems:

- Electronic leak detectors may be used to detect refrigerant leaks but in the case of flammable refrigerants, the sensitivity may not be adequate or may need re-calibration. (Detection equipment must be calibrated in a refrigerant-free area.). Ensure that the detector is not a potential source of ignition and is suitable for the refrigerant used. Leak-detection equipment must be set to a percentage for the Lower-Flammable Limit (LFL) (25% maximum) of the gas that is confirmed.
- Leak detection fluids are also suitable for use with most refrigerants but the use of detergents containing chlorine must be avoided as the chlorine may react with the refrigerant and corrode the copper pipe-work. Examples of leak detection fluids are:
  - — bubble method
  - — fluorescent method agents.

If a leak is suspected, all naked flames must be removed/extinguished.

If a leakage of refrigerant is found that requires brazing, all of the refrigerant must be recovered from the system or isolated (by means of shut-off valves) in a part of the system remote from the leak.

16.10 Removal and Evacuation

When breaking into the refrigerant circuit to make repairs—or for any other purpose—conventional procedures must be used. However, for flammable refrigerants it is important that best practice be followed, since flammability is a consideration. The following procedure must be adhered to:

1. Safely remove refrigerant following local and national regulations.
2. Evacuate.
3. Continuously flush or purge with inert gas when using flame to open circuit.
4. Open the circuit.

The refrigerant charge must be recovered into the correct recovery cylinders if venting is not allowed by local or national codes. For appliances containing flammable refrigerants, the system must be purged with oxygen-free nitrogen to render the appliance safe for flammable refrigerants. This process might need to be repeated several times. Compressed air or oxygen must not be used for purging refrigerant systems.

For appliances containing flammable refrigerants, refrigerants purging must be achieved by breaking the vacuum in the system with oxygen-free nitrogen and continuing to fill until the working pressure is achieved, then venting to atmosphere, and finally pulling down to a vacuum (optional for A2L). This process must be repeated until no refrigerant is within the system (optional for A2L). When the final oxygen-free nitrogen charge is used, the system must be vented down to atmospheric pressure to enable work to take place.

WARNING

Fire Hazard!

The outlet for the vacuum pump must not be close to any potential ignition sources, and ventilation must be available.

16.11 Charging Procedures

In addition to conventional charging procedures, the following requirements must be followed.

- ▶ Ensure that contamination of different refrigerants does not occur when using charging equipment.
- ▶ Ensure hoses or lines are as short as possible to minimize the amount of refrigerant contained in them.
- ▶ Ensure cylinders are kept in an appropriate position according to the instructions.
- ▶ Ensure that the refrigerating system is earthed prior to charging the system with refrigerant.
- ▶ Be sure to label the system when charging is complete (if not already).
- ▶ Use extreme care not to overfill the refrigerating system.
- ▶ Ensure the system is pressure-tested with the appropriate purging gas prior to recharging the system.
- ▶ Ensure the system is leak-tested on completion of charging but prior to commissioning. A follow-up leak test must be carried out prior to leaving the site.

16.12 Recovery

When removing refrigerant from a system, either for servicing or decommissioning, it is recommended good practice that all refrigerants are removed safely.

Ensure the following:

- ▶ Ensure that only appropriate refrigerant recovery cylinders are employed when transferring refrigerant into cylinders.
- ▶ Ensure that the correct number of cylinders for holding the total system charge are available.
- ▶ Ensure all cylinders to be used are designated for the recovered refrigerant and labeled for that refrigerant (*i.e.*, special cylinders for the recovery of refrigerant).
- ▶ Ensure all cylinders are complete with a pressure-relief valve and associated shut-off valves that are all in good working order.
- ▶ Ensure empty recovery cylinders are evacuated and, if possible, cooled before recovery occurs.
- ▶ Ensure the recovery equipment is in good working order.
- ▶ Ensure set of instructions for the recovery equipment is at hand .
- ▶ Ensure the recovery equipment is suitable for the recovery of the flammable refrigerant. If in doubt, the manufacturer should be consulted.
- ▶ Ensure a set of calibrated weighing scales are available and in good working order.
- ▶ Ensure the hoses are complete with leak-free disconnect couplings and are in good condition.
- ▶ Ensure the recovered refrigerant is processed according to local legislations/regulations in the correct recovery cylinder, and the relevant waste transfer note arranged.
- ▶ Ensure there is no mixing of refrigerants in the recovery units and especially not in cylinders.
- ▶ If compressors or compressor oils are to be removed, ensure that they have been evacuated to an acceptable level to make certain that flammable refrigerant does not remain within the lubricant. The compressor body must NOT be heated by an open flame or other ignition sources to accelerate this process. When oil is drained from a system, it must be carried out safely.

16.13 Service Access

16.13.1 Swing-Out Electrical Box

The Electrical Box is designed to swing out of the way, enhancing the unit's accessibility and serviceability. (➔See Fig. 22 and Fig. 23.) For additional details, refer to section 5.9.1 on page #17.

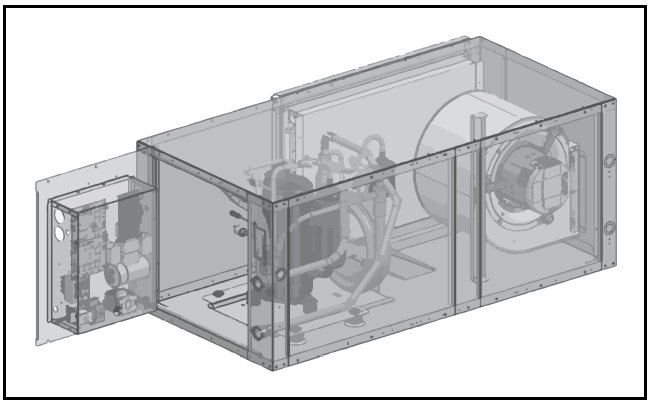

Fig. 22 Swing-Out Electrical Box on a Horizontal Unit

16.13.2 Blower Assembly Access for Vertical Units

For vertically-configured units, the Blower Assembly is designed to slide out to facilitate access and servicing of the blower/motor assembly. (➔See Fig. 23.)

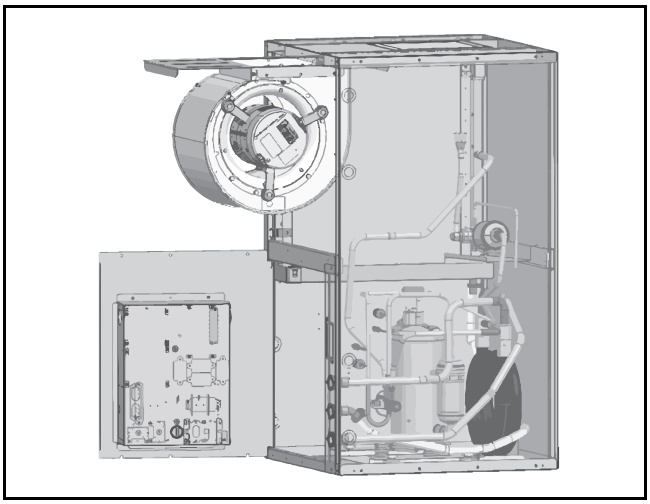

Fig. 23 Electrical Box and Blower Assembly Access

If removal of the blower assembly is required (e.g., when installation constraints prevent the use of the slide-out feature), follow these steps:

- ▶ Remove the three screws positioned above the motor.
- ▶ Drop down and slide off the welded pins situated on the opposite side from the motor.

(➔See Fig. 24.)

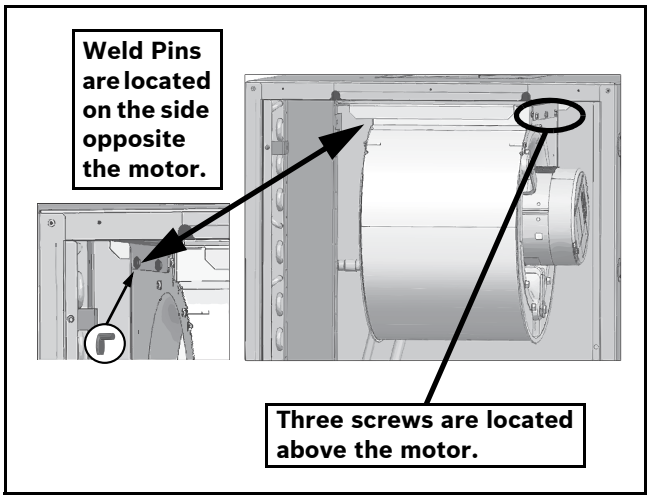

Fig. 24 Screws and Welded Pins Locations for Vertical Units

16.13.3 Blower Assembly Access for Horizontal Units

For horizontally-configured units, follow the steps below to remove the Blower Assembly:

- ▶ Remove the three screws located on the motor side of the blower assembly.
- ▶ Twist and pull the blower back from welded pins located on opposite side to the motor, near the evaporator.

(➔See Fig. 25.)

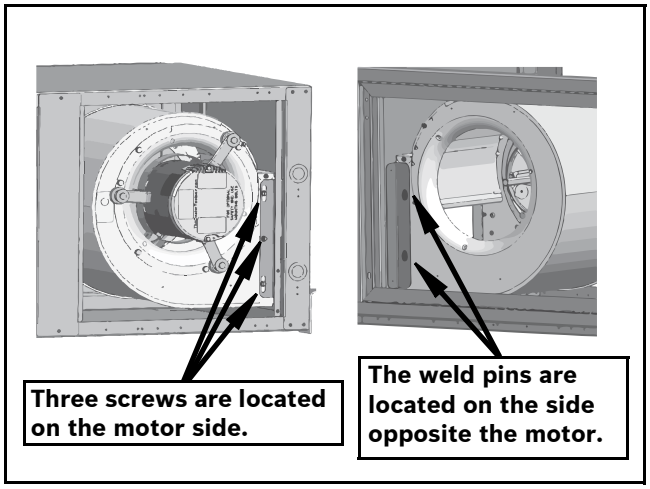

Fig. 25 Screws and Welded Pins Locations for Horizontal Units

17 Decommissioning Information

Only trained and qualified technicians are allowed to decommission and dispose of equipment following the requirements and local codes.

WARNING

Decommissioning of this equipment can be hazardous due to system pressure and electrical components. Only trained and qualified personnel should install, repair, service, or disconnect the equipment.

17.1 Protecting the Environment

17.1.1 Components

By disposing of this product correctly you will help ensure that the waste undergoes the necessary treatment, recovery, and recycling, thus preventing potentially negative effects on the environment and human health, which could otherwise arise due to inappropriate waste handling.

Many parts in the Heat Pump can be fully recycled at the end of the product life. Contact your city authorities for information about the disposal of recyclable products.

17.1.2 Refrigerant

At the end of the service life of this appliance, and prior to its environmental disposal, a person qualified to work with refrigerant circuits must recover the refrigerant from within the sealed system as per applicable local codes.

17.1.3 Hazardous Waste

Some components in the Heat Pump may be considered as hazardous waste, such as batteries. For their disposal contact your local household hazardous waste collection site.

17.2 Decommissioning Procedure

Before carrying out this procedure, it is essential that the technician is completely familiar with the equipment and all its detail.

It is recommended good practice that all refrigerants are recovered safely.

→Refer to Servicing and Repair Information on page 35 for additional safety precautions.

Follow the procedure below.

1. Before attempting the procedure:
   - ▶ Become familiar with the equipment and its operation.
   - ▶ Ensure that electrical power is available for the recovery machine before the task is commenced.
   - ▶ Ensure an oil and refrigerant sample is taken in case analysis is required prior to re-use of recovered refrigerant.
   - ▶ Isolate the system electrically. Lock-Out/Tag-Out recommended.
   - ▶ Ensure that mechanical handling equipment is available, if required, for handling refrigerant cylinders
   - ▶ Ensure that all personal protective equipment is available and being used correctly.
   - ▶ Ensure that the recovery process is supervised at all times by a competent person
   - ▶ Ensure that the recovery equipment and cylinders conform to the appropriate standards.
2. Pump down refrigerant system, if possible.
3. If a vacuum is not possible, make a manifold so that refrigerant can be removed from various parts of the system.
4. Make sure that cylinder is situated on the scales before recovery takes place.
5. Start the recovery machine and operate in accordance with instructions.
6. DO NOT overfill cylinders (no more than 80% volume liquid charge).
7. DO NOT exceed the maximum working pressure of the cylinder, even temporarily.
8. When the cylinders have been filled correctly and the process completed, make sure that the cylinders and the equipment are removed from site promptly and all isolation valves on the equipment are closed off.
9. Recovered refrigerant must NOT be charged into another REFRIGERATING SYSTEM unless it has been cleaned and checked.

17.3 Labeling

The following are required:

- ▶ Equipment must be labeled stating that it has been decommissioned and emptied of refrigerant.
- ▶ The label must be dated and signed.
- ▶ Ensure that there are labels on the equipment stating the equipment contains flammable refrigerant.

18 Troubleshooting

18.1 Unit Troubleshooting

NOTICE

If troubleshooting a system that is low on refrigerant due to a system leak, do not simply add refrigerant. The leak must be found and repaired per F-Gas regulation.

18.1.1 Online Help Resources

For FAQs, videos, service bulletins, and more, visit our Service and Support web page at www.boschheatingcooling.com/service or use your cell phone to scan the code below.

Unit Troubleshooting

Problem	Mode		Check	Possible Cause	Action
	Cooling	Heating			
No compressor operation but fan runs	X		Is the Fault LED blinking one (1) time?	High pressure fault—No or low water flow	Check water valves and/or pumps for proper operation. Check for water coil blockage.
				High pressure fault—High water temperature	Check water temperature—is it in range?
				High pressure fault—Fouled or scaled water coil	Check for proper flow rate and water temperature, but low-water-side temp rise in cooling.
		X	Is the Fault LED blinking one (1) time?	High pressure fault—No or low air flow	Check the fan motor for proper operation.
					Check the air filter.
					Inspect the air coil for dirt/debris.
					Check duct work—Are dampers closed or blocked?
	X		Is the Fault LED blinking two (2) times?	Low pressure fault—No or low air flow	Check the fan motor for proper operation.
					Check the air filter.
					Inspect the air coil for dirt/debris.
					Check duct work—Are dampers closed or blocked?
				Low pressure fault—Low refrigerant	Check refrigerant pressure with a gauge set.

Unit Troubleshooting					
Problem	Mode		Check	Possible Cause	Action
	Cooling	Heating			
No compressor operation but fan runs (Continued)		X	Is the Fault LED blinking two (2) times?	Low pressure fault—No or low air flow	Check water valves and/or pumps for proper operation. Check for water coil blockage.
				Fouled or scaled water-coil	Check for proper flow rate and water temperature, but low-water-side temp rise in cooling.
				Low pressure fault—Low refrigerant	Check refrigerant pressure with a gauge set.
		X	Is the Fault LED blinking three (3) times?	Freeze fault, water coil—No or low water flow	Check water valves and/or pumps for proper operation. Check for water coil blockage.
				Freeze fault—Low water temperature	Check water temperature—is it below 40° F entering? If heat pump is connected to a closed loop with antifreeze check that the “FREEZE 1" resistor on the UPM board has been cut to set the unit to antifreeze mode (see UPM features on page #27).
				Freeze fault—Low refrigerant	Check refrigerant pressure with a gauge set.
	X		Is the Fault LED blinking four (4) times?	Condensate fault—Poor drainage	Check condensate pan for high water level. Check drain line for blockages, double trapping or inadequate trapping.
				Condensate fault—Blocked return air	Check air filter and return air duct work for blockage. Check that there is adequate space between the return air opening and walls or other obstructions on free return applications.

Unit Troubleshooting					
Problem	Mode		Check	Possible Cause	Action
	Cooling	Heating			
No compressor operation but fan runs (Continued)	X	X	Is the Fault LED blinking five (5) times?	Brown out fault—Low voltage supply	Check primary voltage—Ensure it is between the limits listed on the unit data plate.
				Brown out fault—Bad thermostat connection	Check control voltage—if below 18V check accessories connected to the unit and ensure they do not exceed the VA draw shown in Table 4 on page #19.
					Check that thermostat wiring is proper gauge and length, that it is not damaged and that all connections at the thermostat and heat pump are secure.
	X		Is the Fault LED blinking six (6) times?	Freeze fault, air coil—No or low air flow	Check fan motor for proper operation.
					Check the air filter.
					Inspect the air coil for dirt/debris.
					Check duct work—Are dampers closed or blocked?
				Freezer fault, air coil—Blocked return air	Check that there is adequate space between the return air opening and walls or other obstructions on free return applications.
				Freezer fault, air coil—Low refrigerant	Check refrigerant pressure with a gauge set.
	X	X	No Fault LED—Contractor Not Energized	Thermostat not calling for compressor operation	Ensure that the thermostat is ON and calling for "Y."
				Bad thermostat connection	Check "Y" connection from thermostat—Ensure that there is 24 VAC between "Y" and "C."
				Loose wire to contactor coil	Check wiring—Ensure that there is 24 VAC across the contactor coil.
				Burned out contactor coil	Test contactor with 24 VAC (between "R" and "C"). Ohm contactor coil—an open circuit indicates a burned coil.
No compressor operation but fan runs (Continued)	X	X	No Fault LED—Contractor Energized	Open compressor overload	Check for supply voltage at the load side of the contactor. For three-phase models check phase rotation and voltage at all three phases.
				Poor wiring connection	Look for signs of heat on the wiring insulation. Check that all wiring connections are secure and properly torqued.
				Burned out compressor	Does compressor hum when power is applied? If not check the resistance of the compressor windings using the values shown in the compressor characteristics chart. Note that the compressor must be cool (70° F) when checking the windings.

Unit Troubleshooting					
Problem	Mode		Check	Possible Cause	Action
	Cooling	Heating			
No compressor Or fan operation	X	X	Power LED ON	Bad thermostat connection / faulty thermostat	Check thermostat and wiring. Check unit terminal block for 24 VAC between "Y" and "C" and "G" and "C."
			Power LED OFF	Low or no supply power	Ensure that the supply voltage to the unit is with in the range shown on the unit data plate.
				Faulty control transformer	Check for 24 VAC between "R" and "C" on the unit terminal block. For 75 and 100 VA transformers, check that the transformer circuit breaker has not tripped. Check low voltage circuit for overload conditions or short circuits before replacing the transformer.
No Fan operation—constant Airflow motor	X	X	See Action	No fan operation signal	Check for 24 VAC between "G" and "C." Check all wiring connections.
					Make sure that the thermostat connection plug is securely connected.
				Loose wiring	Check all wiring connections at motor and control box. Check that power and control harnesses are securely connected.
				Interface board problem	Make sure that the interface board is not damaged and that all DIP switches are in the proper configuration (refer to the blower performance tables).
				Faulty motor	Check supply voltage to the motor. Check that all motor wires are secure. Move the "TEST" DIP switch to "ON" and the other switches to "OFF" on the "ADJUST" switch block on the interface board—the motor should run at 70% torque when "G" is called. With power off spin the motor shaft—noise, resistance or uneven motion can be signs of motor failure.
Unit not shifting into cooling and heating	X	X	Reversing valve solenoid energized	Faulty solenoid	Check that the reversing valve solenoid is receiving 24 VAC.
					If it is receiving 24 VAC, check the resistance of the solenoid—an open circuit may indicate a burned out solenoid.
			Reversing valve solenoid NOT energized	Miswired/faulty thermostat	Check that the reversing valve thermostat wire is connected to the “O” terminal of the thermostat.
					Check for a contact closure between “O” and “R.”
				Loose wire on “O” terminal	Check that the wires from the thermostat to the unit are securely connected and that the wires from the electrical box to the reversing valve are connected.

Unit Troubleshooting					
Problem	Mode		Check	Possible Cause	Action
	Cooling	Heating			
Excessively cold supply air temperature in cooling or excessively hot supply air temperature in heating	X	X	Reduced air flow	Dirty Filter	Replace filter.
				Fan speed too low	Consult blower performance table and increase fan speed if possible.
				Excessive duct pressure drop	Consult blower performance table and increase fan speed if possible.
Excessively warm supply air temperature in cooling and/or excessively cool air in heating	X	X	Air flow too high	Fan speed setting too high	Consult blower performance table and reduce fan speed if possible.
			High or low water temperature	Inlet water temperature out of range	Check unit capacity vs. water temperature.
			Air leakage	Leaky duct work	Inspect the duct work.
			Loss of refrigeration capacity	Low refrigerant	Check refrigerant pressures with a gauge set.
High humidity	X		Air flow is too high	Fan speed setting is too high	Consult the blower performance table and reduce fan speed if possible.
			Lost of refrigeration capacity	Low refrigerant	Check refrigerant pressures with gauge set.
			Short cycling	Unit oversized	Check unit performance against building load calculations.
				Poor thermostat location	Make sure that the thermostat is not located near a supply air duct.

Unit Troubleshooting					
Problem	Mode		Check	Possible Cause	Action
	Cooling	Heating			
Objectionable noise levels	X	X	Air noise	Poor ductwork/grill design	Ensure the ductwork and grills are properly sized for the unit air flow.
				Fan speed setting too high	Consult blower performance table and reduce fan speed if possible.
			Structure- bourne noise	Unit not mounted on full vibration pad	Mount unit on vibration pad.
				Unit not connected with flexible conduit, water lines, and/or ductwork	Install unit in accordance with the installation instructions staring on page #10.
				Unit cabinet touching wall or other building components	Adjust unit location to avoid unit touching structure.
			Compressor noise	High water temperature or low water flow rate elevating head pressure	Increase water flow rate and/or reduce water temperature if possible.
				Scaled or fouled water coil elevating heat pressure	Clean/descale water coil.
				Low air flow elevating head pressure	Check filter.
					Increase fan speed.
			Water hammer	Fast-closing valves installed	Change valves to slow-close type.

Table 12 Unit Troubleshooting

19 Specification Tables

19.1 Operating Temperatures and Pressures

Operating Temperatures and Pressures										
			Cooling				Heating			
Model	Entering Water Temp. (°F)	Water Flow (GPM/Ton)	Suction Pressure (PSIG)	Discharge Pressure (PSIG)	Water Temp. Rise (°F)	Air Temp. Drop (°F)	Suction Pressure (PSIG)	Discharge Pressure (PSIG)	Water Temp. Drop (°F)	Air Temp. Rise (°F)
RL007	30°	1.4	–	–	–	–	62–72	261–271	5–6	15–19
		2	–	–	–	–	64–74	263–273	4–5	15–19
	40°	1.4	107–130	155–187	12–18	18–22	76–86	273–283	6–7	17–21
		2	107–129	148–177	8–13	18–22	79–89	276–286	4–5	18–22
	50°	1.4	108–134	178–218	12–16	17–21	92–102	287–297	8–9	20–24
		2	108–132	171–208	8–11	17–22	96–102	290–300	5–6	21–25
	60°	1.4	109–137	205–253	11–16	17–21	109–119	302–312	9–10	23–27
		2	109–135	198–241	8–11	17–21	114–124	306–316	6–7	24–28
	70°	1.4	111–140	235–290	11–14	17–20	127–137	317–327	10–11	26–30
		2	110–139	228–278	8–11	18–21	134–144	323–333	7–8	27–31
	80°	1.4	111–143	268–330	10–16	17–21	147–157	335–345	12–13	30–34
		2	111–142	262–319	7–10	17–21	155–165	342–352	8–9	31–35
	90°	1.4	112–146	305–375	10–14	17–20	169–179	354–364	13–14	33–37
		2	112–145	300–364	7–10	17–20	–	–	–	–
	100°	1.4	114–150	346–423	9–14	16–20	–	–	–	–
		2	114–149	343–413	7–10	16–20	–	–	–	–
RL009	30°	1.8	–	–	–	–	61–81	229–285	5–6	18–22
		2.4	–	–	–	–	62–83	230–287	4–5	19–23
	40°	1.8	107–132	159–191	11–16	20–25	74–97	240–300	6–7	21–26
		2.4	107–131	153–183	9–12	20–25	75–100	242–302	4–5	21–26
	50°	1.8	109–135	183–223	11–16	20–25	89–116	254–317	7–9	24–30
		2.4	109–133	178–215	8–12	20–25	91–120	256–320	5–6	24–30
	60°	1.8	111–138	210–257	11–15	19–24	105–136	268–334	8–10	27–34
		2.4	111–136	205–250	8–11	20–25	108–141	271–339	6–7	27–34
	70°	1.8	111–139	241–295	11–14	19–24	123–157	284–354	9–12	30–38
		2.4	112–139	236–288	8–11	19–24	127–164	287–359	7–8	31–39
	80°	1.8	113–142	276–338	10–14	19–23	143–181	300–374	10–12	34–42
		2.4	114–141	271–330	7–10	19–24	148–168	306–381	8–9	34–43
	90°	1.8	116–146	315–384	9–14	18–23	–	–	–	–
		2.4	116–145	310–376	8–9	18–23	–	–	–	–
	100°	1.8	117–148	357–434	9–12	18–22	–	–	–	–
		2.4	118–147	354–427	7–10	18–22	–	–	–	–

Operating Temperatures and Pressures										
			Cooling				Heating			
Model	Entering Water Temp. (°F)	Water Flow (GPM)	Suction Pressure (PSIG)	Discharge Pressure (PSIG)	Water Temp. Rise (°F)	Air Temp. Drop (°F)	Suction Pressure (PSIG)	Discharge Pressure (PSIG)	Water Temp. Drop (°F)	Air Temp. Rise (°F)
RL012	30°	2	–	–	–	–	57–73	229–288	6–7	19–22
		3	–	–	–	–	59–76	232–293	4–5	19–22
	40°	2	103–129	164–206	14–19	20–24	68–87	241–303	7–8	21–25
		3	103–128	152–191	10–12	20–25	72–92	244–308	5–6	22–26
	50°	2	104–132	188–237	14–18	20–23	74–110	254–319	8–9	24–28
		3	104–131	176–222	10–11	20–24	78–116	259–325	6–7	25–29
	60°	2	106–135	215–271	13–18	20–24	97–121	269–337	9–11	27–32
		3	105–133	203–256	10–11	20–24	102–128	275–344	7–8	28–34
	70°	2	107–137	245–308	13–17	20–23	113–141	286–357	11–13	30–36
		3	107–135	233–293	9–12	19–23	121–149	293–366	7–9	31–37
	80°	2	109–140	278–349	12–17	19–23	132–162	305–379	12–14	34–40
		3	109–139	267–334	8–11	19–23	141–172	313–389	8–10	35–42
	90°	2	111–143	314–394	12–16	19–22	–	–	–	–
		3	111–142	303–379	8–11	18–22	–	–	–	–
	100°	2	113–146	353–443	11–14	18–22	–	–	–	–
		3	113–144	344–428	7–10	18–22	–	–	–	–
RL015	30°	2.5	–	–	–	–	57–73	235–290	6–7	19–21
		3.8	–	–	–	–	59–76	238–293	4–5	20–23
	40°	2.5	108–135	178–219	14–20	22–26	69–88	248–305	7–8	22–25
		3.8	108–134	166–204	10–13	22–26	72–92	251–310	5–5	23–26
	50°	2.5	109–138	204–251	14–20	22–26	75–112	262–322	9–10	25–28
		3.8	108–136	192–236	9–12	21–26	80–118	266–327	6–7	26–30
	60°	2.5	110–140	233–287	14–18	21–25	98–123	278–340	10–11	28–32
		3.8	110–139	221–272	9–12	22–26	104–130	283–347	7–8	29–33
	70°	2.5	111–142	265–326	13–18	21–25	115–143	294–360	11–12	32–36
		3.8	111–141	253–311	9–12	21–25	122–151	302–369	8–9	33–38
	80°	2.5	112–145	301–369	13–17	21–24	134–164	314–382	13–14	35–40
		3.8	112–143	290–355	8–11	21–25	143–175	323–393	9–10	36–42
	90°	2.5	114–147	339–416	12–17	20–24	155–188	335–406	14–16	39–44
		3.8	114–146	330–403	9–10	20–24	–	–	–	–
	100°	2.5	116–150	381–469	11–16	20–23	–	–	–	–
		3.8	116–149	374–456	8–10	20–24	–	–	–	–

Operating Temperatures and Pressures										
			Cooling				Heating			
Model	Entering Water Temp. (°F)	Water Flow (GPM)	Suction Pressure (PSIG)	Discharge Pressure (PSIG)	Water Temp. Rise (°F)	Air Temp. Drop (°F)	Suction Pressure (PSIG)	Discharge Pressure (PSIG)	Water Temp. Drop (°F)	Air Temp. Rise (°F)
RL018	30°	3	–	–	–	–	59–69	266–286	7–8	20–24
		5	–	–	–	–	64–74	272–292	4–5	21–25
	40°	3	100–118	176–196	15–18	21–25	71–81	281–301	8–9	23–27
		5	99–117	160–180	9–12	21–25	77–87	288–308	5–6	24–28
	50°	3	102–120	203–223	14–17	20–24	85–95	297–317	9–10	26–30
		5	101–119	187–207	8–11	20–24	93–103	306–326	6–7	26–32
	60°	3	104–122	234–254	14–17	20–24	101–111	316–336	10–11	29–33
		5	103–121	217–237	8–11	20–24	110–120	326–346	7–8	31–35
	70°	3	106–124	267–287	14–17	19–23	118–128	335–355	12–13	33–37
		5	105–123	251–271	8–11	20–24	129–139	349–369	7–8	35–39
	80°	3	108–126	305–325	13–16	19–23	137–147	357–377	13–14	37–41
		5	107–125	289–309	8–11	19–23	151–161	374–394	8–9	39–43
	90°	3	110–128	346–366	13–16	19–23	158–168	382–402	15–16	41–45
		5	109–127	332–352	7–10	19–23	–	–	–	–
	100°	3	112–130	391–411	12–15	18–22	–	–	–	–
		5	112–130	378–398	7–10	18–22	–	–	–	–
RL024	30°	3	–	–	–	–	55–65	256–276	8–9	18–22
		6	–	–	–	–	62–76	264–284	4–5	20–24
	40°	3	105–122	213–231	20–23	21–25	66–76	269–289	10–11	21–25
		6	102–119	178–196	10–13	21–25	76–86	279–299	5–6	23–27
	50°	3	106–123	242–260	19–22	20–24	79–89	283–303	11–12	24–28
		6	104–121	206–224	9–12	21–25	91–101	296–316	6–7	26–30
	60°	3	108–125	274–292	19–22	20–24	93–103	298–318	13–24	27–31
		6	106–123	238–256	9–12	20–24	108–118	314–334	7–8	30–34
	70°	3	110–127	309–327	18–21	19–23	109–119	315–325	14–15	30–34
		6	108–125	273–291	9–12	20–24	126–136	334–354	8–9	33–37
	80°	3	112–129	347–365	18–21	19–23	126–136	334–354	16–17	33–37
		6	110–127	312–330	9–12	19–23	147–157	357–377	9–10	37–41
	90°	3	114–131	390–408	17–20	19–23	145–155	354–374	18–19	37–41
		6	112–129	356–374	8–11	19–23	–	–	–	–
	100°	3	116–133	436–454	16–19	18–22	–	–	–	–
		6	114–131	404–422	8–11	18–22	–	–	–	–

Operating Temperatures and Pressures										
			Cooling				Heating			
Model	Entering Water Temp. (°F)	Water Flow (GPM)	Suction Pressure (PSIG)	Discharge Pressure (PSIG)	Water Temp. Rise (°F)	Air Temp. Drop (°F)	Suction Pressure (PSIG)	Discharge Pressure (PSIG)	Water Temp. Drop (°F)	Air Temp. Rise (°F)
RL030	30°	4	–	–	–	–	53–63	273–293	7–8	18–22
		7.5	–	–	–	–	59–69	280–300	4–5	20–24
	40°	4	102–120	200–218	19–22	21–25	64–74	287–307	9–10	21–25
		7.5	100–118	173–191	10–13	21–25	72–82	296–316	5–6	23–27
	50°	4	104–122	227–245	18–21	20–24	77–87	302–322	10–11	24–28
		7.5	102–120	201–219	9–12	21–25	87–97	314–334	6–7	26–30
	60°	4	105–123	257–275	18–21	20–24	91–101	320–340	12–13	27–31
		7.5	104–122	232–250	9–12	20–24	103–113	334–354	7–8	29–33
	70°	4	107–125	291–309	17–20	20–24	107–117	339–659	13–14	30–34
		7.5	106–124	266–284	9–12	20–24	121–131	357–377	8–9	33–37
	80°	4	109–127	328–346	16–19	19–23	124–134	360–380	15–16	34–38
		7.5	108–126	305–323	8–11	19–23	142–152	382–402	9–10	37–41
	90°	4	111–129	370–388	16–19	19–23	143–153	384-404	17–18	37–41
		7.5	110–128	349–367	8–11	19–23	–	–	–	–
	100°	4	113–131	415–433	15–18	18–22	–	–	–	–
		7.5	113–131	396–414	8–11	19–23	–	–	–	–
RL036	30°	4.5	–	–	–	–	49–59	257–277	7–8	17–21
		9	–	–	–	–	56–66	266–286	4–5	19–23
	40°	4.5	115–131	207–231	21–24	23–27	60–70	269–289	9–10	19–23
		9	112–128	171–195	10–13	23–27	67–77	275–295	5–6	21–25
	50°	4.5	116–132	234–258	20–23	22–26	71–81	278–298	10–11	22–26
		9	114–130	197–221	10–13	23–27	81–91	286–306	5–6	24–28
	60°	4.5	118–134	264–288	20–23	22–26	84–94	289–309	12–13	25–29
		9	116–132	227–251	10–13	22–26	96–106	299–319	6–7	27–31
	70°	4.5	119–135	297–321	19–22	21–25	98–108	301–321	13–14	28–32
		9	118–134	260–284	9–12	22–26	113–123	316–336	7–8	31–35
	80°	4.5	121–137	333–357	18–21	21–25	114–124	317–337	15–16	31–35
		9	119–135	297–321	9–12	21–25	132–142	335–355	8–9	35–39
	90°	4.5	122–138	372–396	18–21	21–25	131–141	334–354	17–18	35–39
		9	121–137	338–362	8–12	21–25	153–163	356–376	9–10	39–43
	100°	4.5	124–140	414–438	17–20	20–24	–	–	–	–
		9	123–139	383–407	8–11	20–24	–	–	–	–

Operating Temperatures and Pressures										
			Cooling				Heating			
Model	Entering Water Temp. (°F)	Water Flow (GPM)	Suction Pressure (PSIG)	Discharge Pressure (PSIG)	Water Temp. Rise (°F)	Air Temp. Drop (°F)	Suction Pressure (PSIG)	Discharge Pressure (PSIG)	Water Temp. Drop (°F)	Air Temp. Rise (°F)
RL042	30°	6	–	–	–	–	54–64	249–273	7–8	18–22
		10.5	–	–	–	–	59–69	254–278	4–5	19–23
	40°	6	109–125	197–221	17–20	21–25	66–76	262–286	8–9	21–25
		10.5	108–124	174–198	9–12	21–25	72–82	268–292	5–6	22–26
	50°	6	111–127	224–248	16–19	21–25	79–89	275–299	9–10	23–27
		10.5	110–126	201–225	9–12	21–25	87–97	283–307	6–7	25–29
	60°	6	112–128	255–279	16–19	20–24	94–104	290–314	11–12	26–30
		10.5	111–127	231–255	9–12	21–25	103–113	300–324	6–7	28–32
	70°	6	114–130	289–313	15–18	20–24	110–120	307–331	12–13	29–33
		10.5	113–129	266–290	9–12	20–24	122–132	320–344	7–8	32–36
	80°	6	115–131	326–350	15–18	20–24	129–139	327–351	14–15	33–37
		10.5	114–130	304–328	8–11	20–24	143–153	342–366	8–9	36–40
	90°	6	117–133	368–392	14–17	19–23	148–158	348–372	15–16	37–41
		10.5	116–132	347–371	8–11	19–23	165–175	367–391	9–10	40–44
	100°	6	119–135	413–437	14–17	19–23	–	–	–	–
		10.5	118–134	394–418	8–11	19–23	–	–	–	–
RL048	30°	8	–	–	–	–	49–69	258–278	6–7	18–22
		12	–	–	–	–	53–73	262–282	4–5	19–23
	40°	8	109–125	204–224	14–17	21–25	61–81	271–291	7–8	21–25
		12	108–124	184–204	9–12	21–25	66–86	276–296	5–6	22–26
	50°	8	111–127	230–250	14–17	21–25	75–95	286–306	8–9	24–28
		12	110–126	210–230	9–12	21–25	80–100	292–312	6–7	25–29
	60°	8	112–128	260–280	14–17	21–25	90–110	302–322	9–10	27–31
		12	111–127	239–259	9–12	21–25	97–117	310–330	6–7	28–32
	70°	8	114–130	294–314	13–16	20–24	106–126	321–341	11–12	30–34
		12	113–129	273–293	9–12	20–24	115–135	330–350	7–8	32–36
	80°	8	115–131	331–351	13–16	20–24	125–145	341–361	12–13	33–37
		12	114–130	310–330	8–11	20–24	135–155	353–373	8–9	35–39
	90°	8	117–133	372–392	12–15	19–23	145–165	364–384	13–14	37–41
		12	116–132	352–372	8–11	20–24	157–177	379–399	9–10	39–43
	100°	8	118–134	417–437	12–15	19–23	–	–	–	–
		12	118–134	398–418	8–11	19–23	–	–	–	–

Operating Temperatures and Pressures										
			Cooling				Heating			
Model	Entering Water Temp. (°F)	Water Flow (GPM)	Suction Pressure (PSIG)	Discharge Pressure (PSIG)	Water Temp. Rise (°F)	Air Temp. Drop (°F)	Suction Pressure (PSIG)	Discharge Pressure (PSIG)	Water Temp. Drop (°F)	Air Temp. Rise (°F)
RL060	30°	10	–	–	–	–	49–65	264–321	6–8	21–25
		15	–	–	–	–	53–69	268–326	4–5	21–26
	40°	10	94–119	196–235	14–20	22–26	60–78	278–340	8–9	24–28
		15	94–118	181–217	9–12	22–26	64–83	284–347	5–6	25–30
	50°	10	95–121	221–267	13–19	21–25	72–93	295–361	9–10	27–32
		15	95–120	206–249	9–12	21–26	77–99	302–370	6–7	28–34
	60°	10	96–123	249–302	13–19	21–26	86–109	314–385	10–12	30–36
		15	97–122	234–284	9–13	21–25	92–117	323–396	7–8	31–37
	70°	10	98–125	281–342	12–18	21–25	101–128	336–412	11–13	34–40
		15	98–124	266–323	8–13	21–25	109–137	347–425	8–9	35–42
	80°	10	99–127	316–384	12–18	20–24	119–148	360–440	12–15	37–44
		15	100–126	303–366	8–11	20–24	128–159	373–456	8–10	39–46
	90°	10	101–129	355–431	12–18	20–24	138–170	386–472	13–16	41–49
		15	101–128	343–413	8–11	20–24	150–184	402–489	9–11	44–52
	100°	10	103–132	398–481	12–16	19–23	–	–	–	–
		15	103–130	387–464	8–11	20–24	–	–	–	–
RL070	30°	12	–	–	–	–	52–68	252–309	5–7	22–26
		16	–	–	–	–	54–70	255–313	4–5	22–27
	40°	12	97–123	185–225	13–17	22–27	63–81	265–327	7–8	25–29
		16	97–122	176–214	9–14	22–27	66–85	269–332	5–6	25–30
	50°	12	98–125	209–257	12–17	22–27	76–97	281–347	8–9	27–32
		16	98–124	200–245	9–12	22–27	79–101	285–353	6–7	28–34
	60°	12	100–127	236–292	12–17	22–26	91–114	299–370	8–10	30–36
		16	99–126	227–279	9–13	22–26	94–119	304–377	7–8	32–38
	70°	12	101–129	267–329	12–16	21–26	106–133	318–394	10–12	34–40
		16	101–128	259–318	8–13	21–26	111–139	325–403	8–9	35–42
	80°	12	102–130	302–372	11–16	21–25	125–154	342–422	10–13	38–45
		16	102–130	293–359	9–12	21–26	131–162	349–432	8–10	40–47
	90°	12	104–133	339–417	11–15	21–25	145–177	367–453	12–15	42–50
		16	104–132	333–405	8–11	21–25	153–187	377–464	9–11	44–52
	100°	12	105–135	382–466	10–15	20–24	–	–	–	–
		16	105–134	376–455	8–11	20–24	–	–	–	–

Table 13 Operating Temperatures and Pressures

19.2 Water-Side Pressure Drop Table

Model	Water Flow Rate (GPM)	Water-Side Pressure Drop without Internal VaQVe (PSI)	Water-Side Pressure Drop with Internal VaQVe (PSI)
RL007	1.0	0.6	0.9
	2.0	2.0	3.2
	3.0	4.1	6.6
RL009	1.0	0.6	0.8
	2.0	2.0	2.8
	3.0	4.1	5.8
RL012	1.5	1.2	1.7
	2.5	3.0	4.1
	3.5	5.4	7.6
RL015	2.0	2.0	2.7
	3.0	4.1	5.6
	4.0	6.8	9.4
RL018	2.5	1.6	3.0
	4.0	3.7	7.2
	5.0	5.4	10.9
RL024	3.0	1.4	1.7
	4.0	2.3	2.8
	6.0	4.7	5.8
RL030	4.0	1.2	1.6
	6.0	2.5	3.4
	8.0	4.2	5.7
RL036	4.5	1.5	2.3
	6.0	2.5	3.9
	9.0	5.2	8.2
RL042	5.0	1.8	2.8
	8.0	4.2	6.5
	11.0	7.3	11.7
RL048	6.0	1.5	2.7
	8.0	2.5	4.7
	12.0	5.2	9.9
RL060	7.5	1.4	2.4
	10.0	2.3	4.1
	15.0	4.7	8.7
RL070	9.0	1.9	3.3
	12.0	3.2	5.6
	18.0	6.6	12.0

Notes:
All values are based upon pure water at 70° F.
PD (psi) = [(Wtr Flow (gpm)^1.8) * k const] / 2.31
PD (psi) = (Wtr Flow (gpm) / CV)^2 * Specific Gravity

Table 14 Water-Side Pressure Drop Table

19.3 Compressor Characteristics

Model	Voltage Code	Cold Winding Resistance Values (+/-7%)					Run Capacitor (µF/V)
		Single Phase		Three Phase			
		R-C	S-C	T1–T2	T2–T3	T3–T1	
RL007	208–230/1/160	5.50	6.64	–	–	–	15µF/370V
	265/1/60	7.84	5.59	–	–	–	15µF/440V
RL009	208–230/1/60	3.78	2.91	–	–	–	25µF/370V
	265/1/60	4.30	4.27	–	–	–	20µF/440V
RL012	208–230/1/60	2.84	1.96	–	–	–	35µF/370V
	265/1/60	3.67	2.96	–	–	–	30µF/440V
RL015	208–230/1/60	2.60	2.28	–	–	–	40µF/370V
	265/1/60	3.04	3.18	–	–	–	30µF/440V
RL018	208–230/1/60	1.97	1.42	–	–	–	50µF/440V
	265/1/60	2.54	1.87	–	–	–	30µF/440V
RL024	208–230/1/60	1.18	1.61	–	–	–	55µF/440V
	265/1/60	2.44	2.23	–	–	–	40µF/440V
	208–230/3/60	–	–	1.59			–
	460/3/60	–	–	6.079			–
RL030	208–230/1/60	1.110	1.060	–	–	–	60µF/440V
	265/1/60	1.176	1.661	–	–	–	35µF/440V
	208–230/3/60	–	–	1.423			–
	460/3/60	–	–	4.565			–
RL036	208–230/1/60	0.719	1.431	–	–	–	40µF/370V
	265/1/60	0.888	1.342	–	–	–	45µF/370V
	208–230/3/60	–	–	0.975			–
	460/3/60	–	–	4.266			–
RL042	208–230/1/60	0.568	1.636	–	–	–	45µF/370V
	265/1/60	0.665	1.539	–	–	–	40µF/370V
	208–230/3/60	–	–	1.117			–
	460/3/60	–	–	4.404			–
RL048	208-230/1/60	0.518	1.603	–	–	–	45µF/370V
	208–230/3/60	–	–	0.796	0.975	0.796	–
	460/3/60	–	–	4.404			–
	575/3/60	–	–	5.613			–
RL060	208–230/1/60	0.356	0.727	–			70µF/370V
	208–230/3/60	–	–	0.629	0.772	0.629	–
	460/3/60	–	–	3.44			–
	575/3/60	–	–	4.91	3.75	4.91	–
RL070	208–230/1/60	0.336	0.921	–	–	–	80µF/370V
	208–230/3/60	–	–	0.542			–
	460/3/60	–	–	2.161			–
	575/3/60	–	–	4.91	3.75	4.91	–

Table 15 Compressor Characteristics

19.4 Corner Weights (Horizontal Cabinets Only)

Model			Left-Hand Evaporator				Right-Hand Evaporator			
	Total		Left Front*	Right Front*	Left Back	Right Back	Left Front*	Right Front*	Left Back	Right Back
RL007 HZ	lbs.	98.0	30.8	21.0	20.0	26.2	21.0	30.8	26.2	20.0
	kg.	44.5	14.0	9.5	9.1	11.9	9.5	14.0	11.9	9.1
RL009 HZ	lbs.	106.0	32.8	23.0	22.0	28.2	23.0	32.8	28.2	22.0
	kg.	48.1	14.9	10.4	10.0	12.8	10.4	14.9	12.8	10.0
RL012 HZ	lbs.	114.0	34.8	25.0	24.0	30.2	25.0	34.8	30.2	24.0
	kg.	51.7	15.8	11.3	10.9	13.7	11.3	15.8	13.7	10.9
RL015 HZ	lbs.	146.8	40.2	38.6	31.4	36.6	38.6	40.2	36.6	31.4
	kg.	66.6	18.2	17.5	14.2	16.6	17.5	18.2	16.6	14.2
RL018 HZ	lbs.	154.8	42.2	40.6	33.4	38.6	40.6	42.2	38.6	33.4
	kg.	70.2	19.1	18.4	15.1	17.5	18.4	19.1	17.5	15.1
RL024 HZ	lbs.	183.2	45.8	58.2	42.2	37.0	58.2	45.8	37.0	42.2
	kg.	83.1	20.8	26.4	19.1	16.8	26.4	20.8	16.8	19.1
RL030 HZ	lbs.	187.4	58.2	50.2	36.8	42.2	50.2	58.2	42.2	36.8
	kg.	85.0	26.4	22.8	16.7	19.1	22.8	26.4	19.1	16.7
RL036 HZ	lbs.	205.2	61.6	46.6	40.6	56.4	46.6	61.6	56.4	40.6
	kg.	93.1	27.9	21.1	18.4	25.6	21.1	27.9	25.6	18.4
RL042 HZ	lbs.	213.2	63.6	48.6	42.6	58.4	48.6	63.6	58.4	42.6
	kg.	96.7	28.8	22.0	19.3	26.5	22.0	28.8	26.5	19.3
RL048 HZ	lbs.	266.6	77.0	74.4	52.6	62.6	74.4	77.0	62.6	52.6
	kg.	120.9	34.9	33.7	23.9	28.4	33.7	34.9	28.4	23.9
RL060 HZ	lbs.	285.2	77.2	82.2	73.4	52.4	82.2	77.2	52.4	73.4
	kg.	129.4	35.0	37.3	33.3	23.8	37.3	35.0	23.8	33.3
RL070 HZ	lbs.	296.2	85.0	90.6	60.2	60.4	90.6	85.0	60.4	60.2
	kg.	134.4	38.6	41.1	27.3	27.4	41.1	38.6	27.4	27.3

*The front is the control box end of the unit.

Table 16 Corner Weights (HZ)

19.5 Model 24 Thermistor (Freeze Sensor) Test Values

(10,000 ohm at 77°F ±0.36°F from 32°F to 158°F)

Temperature (°F)	Resistance
-35	280.1K
-30	324.1K
-25	196.3K
-20	165.1K
-15	139.3K
-10	118.0K
-5	100.2K
0	85.35K
5	72.91K
10	62.48K
15	53.64K
20	46.23K
25	39.91K
30	34.56K
35	30.00K
40	26.10K
45	22.76K
50	19.90K
55	17.44K
60	15.31K
65	13.48K
70	11.88K
75	10.50K
80	9298
85	8250
90	7331
95	6532
100	5826
105	5209
110	4663
115	4182
120	3757
125	3381
130	3047
135	2750
140	2486
145	2251
150	2041
155	1854
160	1686
165	1535
170	1400
175	1278
180	1168
185	1070
190	980.5
195	899.6
200	826.8
205	760.7
210	700.7
215	646.1
220	596.4
225	551.5
230	510.2
235	472.5
240	438.3

Table 17 Model 24 Thermistor (Freeze Sensor) Test Values

20 Wiring Diagrams

20.1 Single-Stage, Single-Phase, Standard Unit with Permanent Split Capacitor (PSC) Motor

UPM STATUS LED - BLINK CODES	
1	HIGH PRESSURE FAULT
2	LOW PRESSURE FAULT
3	CONDENSER FREEZE CONDITION
4	CONDENSATE OVERFLOW FAULT
5	BROWN OUT FAULT
6	EVAPORATOR FREEZE CONDITION
7	REFRIGERANT LEAKAGE

COLOR CHART LEGEND	
ABBREVIATION	COLOR
BK	BLACK
BL	BLUE
BN	BROWN
GN	GREEN
OR	ORANGE
RD	RED
VT	VIOLET
WT	WHITE
YL	YELLOW
GY	GREY

FACTORY WIRE ————
FIELD WIRE - - - - - - -

STANDARD COMPONENTS LEGEND:
BC – BLOWER MOTOR CAPACITOR
BM – BLOWER MOTOR
BR – BLOWER RELAY
CAP – COMPRESSOR CAPACITOR
CC – COMPRESSOR CONTACTOR
CS – CONDENSATE SENSOR (IN DRAIN PAN)
FS – FREEZE SENSORS
HPS – HIGH PRESSURE SWITCH
LPS – LOW PRESSURE SWITCH
RV – REVERSING VALVE (HEAT PUMPS)

OPTIONAL COMPONENTS LEGEND:
[ ] A2L – AIR TO LIQUID REFRIGERANT LEAK SENSOR
[ ] AUX – AUXILIARY RELAY (FOR LOOP PUMP, ETC)
[ ] BMR – BLOWER MONITOR RELAY
[ ] CBR – 24V CIRCUIT BREAKER (75VA & 100VA ONLY)
[ ] CMR – COMPRESSOR MONITOR RELAY
[ ] DPS – DIFFERENTIAL PRESSURE SWITCH
[ ] DS – DISCONNECT SWITCH
[ ] EMS – ENERGY MGMT SYSTEM RELAY
[ ] HSL – HIGH TEMPERATURE SUCTION LIMIT (WITH HOT GAS BYPASS ONLY)
[ ] LWV – LEAVING WATER VALVE

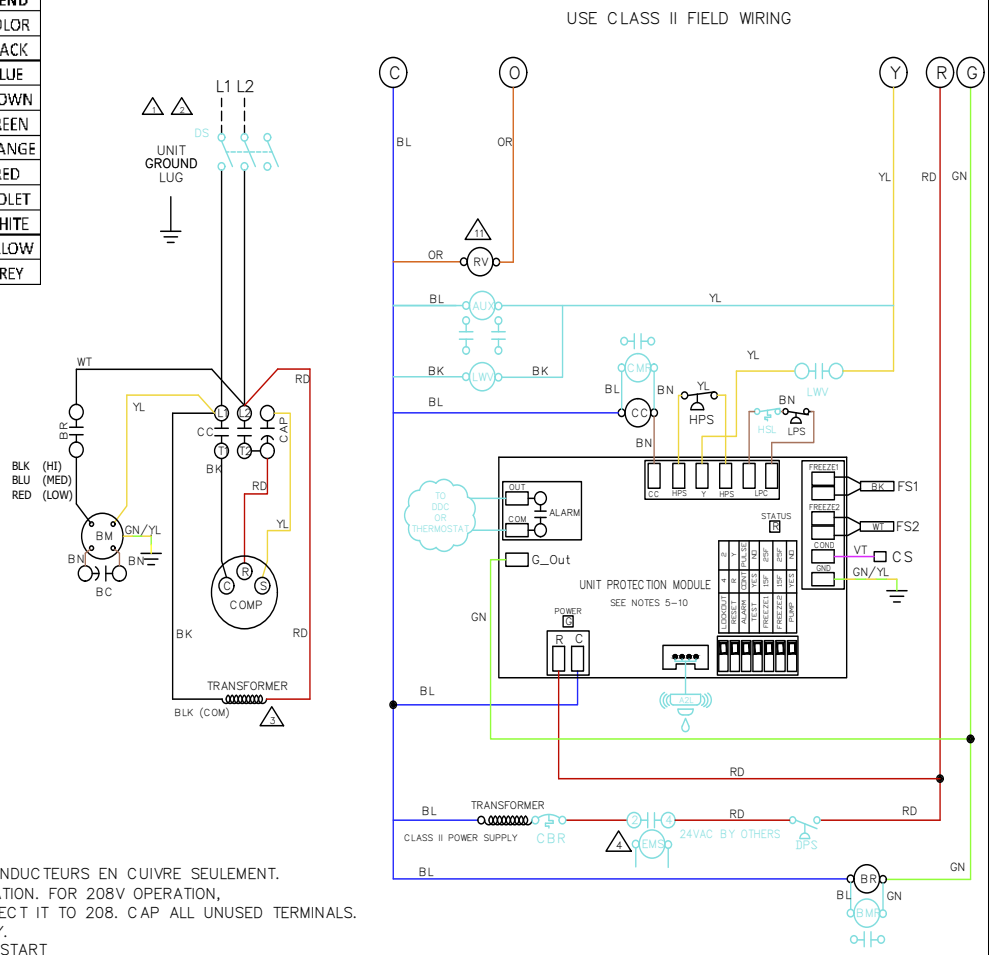

NOTES:
1. SEE UNIT NAME PLATE FOR ELECTRICAL RATING.
2. ALL FIELD WIRING MUST BE IN ACCORDANCE WITH N.E.C.–N.F.P.A. #70, COPPER CONDUCTORS ONLY – CONDUCTEURS EN CUIVRE SEULEMENT.
3. 208/230V UNITS ARE FACTORY WIRED FOR 230V OPERATION. FOR 208V OPERATION, REMOVE PRIMARY LEAD FROM 240 TERMINAL AND CONNECT IT TO 208. CAP ALL UNUSED TERMINALS.
4. FOR ALTERNATE EMS COIL VOLTAGES CONSULT FACTORY.
5. UPM–I INCLUDES BUILT IN: 270–300 SECOND RANDOM START
   300 SECOND DELAY ON BREAK
   120 SECOND LOW PRESSURE BYPASS
6. "TEST" DIP SWITCH REDUCES DELAYS TO 10 SEC WHEN SET TO YES. MUST BE SET TO "NO" FOR NORMAL OPERATION.
7. "FREEZE SENSOR" ON CONDENSER WILL BE SET TO 25° F OPERATION BY DEFAULT, IF 15° F OPERATION IS REQUIRED, MOVE DIP SWITCH SLIDER TO THE 15° F POSITION.
8. "ALARM OUTPUT" DIP SWITCH MUST BE SET TO "PULSE" IF BLINKING T–STAT SERVICE LIGHT IS DESIRED OR IF DDC CONNECTION IS AVAILABLE. CONT FOR NON BLINKING THERMOSTAT CONNECTION.
9. DEFAULT SETTINGS FOR UPM BOARD FROM FACTORY SHOWN. ALSO SEE INSTALLATION MANUAL.
10. ALARM OUTPUT IS NORMALLY OPEN (NO) DRY CONTACT. IF 24 VAC IS NEEDED, CONNECT R FROM TERMINAL BLOCK TO ALR–COM TERMINAL, 24VAC WILL BE SENSED ON THE ALR–OUT WHEN THE UNIT IS IN ALARM CONDITION. OUTPUT WILL BE PULSED IF PULSE IS SELECTED.
11. REVERSING VALVE NOT PRESENT ON UNITS WITH STRAIGHT COOL.

1 STAGE – 1 PHASE – PSC MOTOR 1/2 THROUGH 6 TONS CAPACITY UPM I - STD			
PART No.	8 733 838 088		
DWG No. CL111001	DRAWN BY: FZA	DATE 4/8/2024	REV 2
E–MAIL:			

Fig. 26 Single-Stage, Single-Phase, Standard Unit with PSC Motor

FOR REFERENCE ONLY Actual unit wiring may vary from this example. Always refer to the wiring diagram attached to the unit.

21 Dimensional Drawings

21.1 Vertical (VT) Unit Dimensions

Model		RL007	RL009	RL012	RL015	RL018	RL024	RL030	RL036	RL042	RL048	RL060	RL070
Condensate Drain Connection		3/4" FPT	3/4" FPT	3/4" FPT	3/4" FPT	3/4" FPT	3/4" FPT	3/4" FPT	3/4" FPT	3/4" FPT	3/4" FPT	3/4" FPT	3/4" FPT
Recommended Replacement Nominal Filter Size		12" x 16"	12" x 16"	12" x 16"	17" x 19"	17" x 19"	18" x 22"	18" x 22"	19" x 27"	24" x 30"	24" x 30"	24" x 30"	20" x 27" (2 Filters)
Condenser Water Connections		3/4" FPT	3/4" FPT	3/4" FPT	3/4" FPT	3/4" FPT	3/4" FPT	3/4" FPT	3/4" FPT	3/4" FPT	1" FPT	1" FPT	1" FPT
A	Width	19"	19"	19"	21.5"	21.5"	21.5"	21.5"	21.5"	21.5"	24"	24"	24"
B	Depth	19"	19"	19"	21.5"	21.5"	21.5"	21.5"	21.5"	26"	26"	26"	33"
C	Height	23"	23"	23"	33"	33"	39"	39"	39"	44"	44"	44"	58"
D	Discharge Depth	4"	4"	4"	9.75"	9.75"	9.75"	9.75"	11.5"	11.25"	11.25"	12.5"	12.5"
E	Discharge Width	6.5"	6.5"	6.5"	9"	9"	9"	9"	10.5"	10.5"	10.5"	11.75"	11.75"
F	Cabinet Edge to Discharge (Left-Hand Return)	6.5"	6.5"	6.5"	4.25"	4.25"	4.25"	4.25"	2.25"	5.75"	5"	4.25"	9"
	Cabinet Edge to Discharge (Right-Hand Return)	2.64"	2.64"	2.64"	4.25"	4.25"	4.25"	4.25"	2.25"	5.75"	5"	4.25"	9"
G	Cabinet Edge to Discharge (Left-Hand Return)	5.5"	5.5"	5.5"	6.25"	6.25"	6.25"	6.25"	6.5"	5.5"	6.75"	6.25"	6.25"
H	Water Inlet	3.5"	3.5"	3.5"	3"	3"	3.25"	3.25"	3.25"	3.25"	3"	3.25"	3"
J	Water Outlet	8.5"	8.5"	8.5"	8.5"	8.5"	8.5"	8.5"	8.5"	8.5"	8.5"	8"	8.5"
K	Condensate Drain	6"	6"	6"	6"	6"	5.75"	5.75"	5.75"	5.75"	5.75"	5.75"	5.75"
M	R/A Duct Width	14.75"	14.75"	14.75"	17.5"	17.5"	18"	18"	18.25"	24"	24"	24"	24.25"
N	R/A Duct Flange Height	10"	10"	10"	15.25"	15.25"	20"	20"	25"	28.25"	28.25"	28.25"	38.25"
P	Filter Rack Height	12"	12"	12"	17.25"	17.25"	22.25"	22.25"	27"	30.75"	30"	30"	32"
Q	Cabinet Edge to Discharge (Right-Hand Return)	5.5"	5.5"	5.5"	6.25"	6.25"	6.25"	6.25"	6.5"	5.5"	6.75"	6"	6"

Table 18 Vertical (VT) Unit Dimensions

- Specifications subject to change without notice.
- All dimensions within ±0.125".
- Overall unit dimensions do not include filter rack or duct flanges.

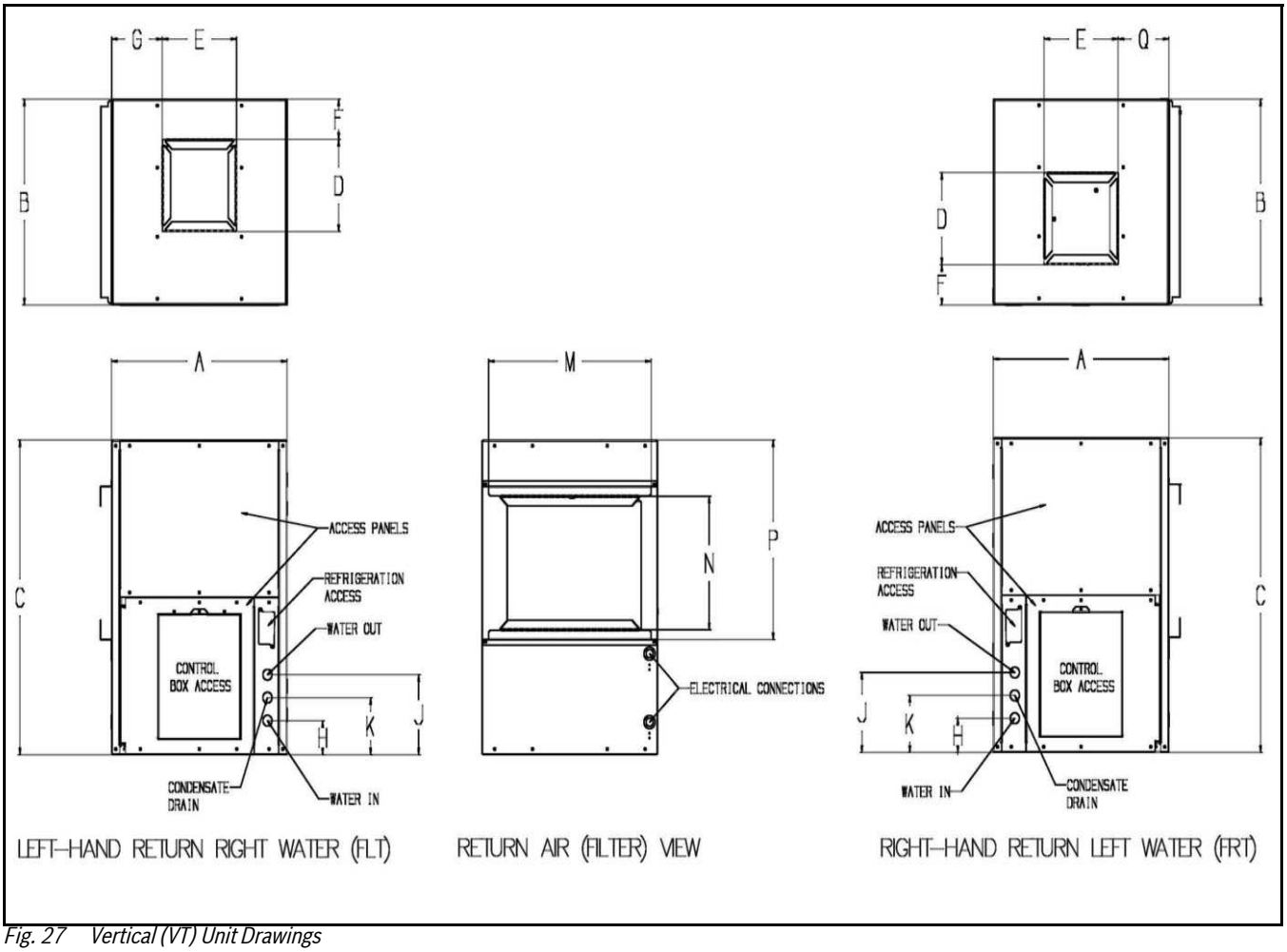

Fig. 27 Vertical (VT) Unit Drawings

21.2 Horizontal (HZ) Unit Dimensions

Model		RL007	RL009	RL012	RL015	RL018	RL024	RL030	RL036	RL042	RL048	RL060	RL070
Condensate Drain Connection		3/4" FPT	3/4" FPT	3/4" FPT	3/4" FPT	3/4" FPT	3/4" FPT	3/4" FPT	3/4" FPT	3/4" FPT	3/4" FPT	3/4" FPT	3/4" FPT
Recommended Replacement Nominal Filter Size		10" x 16"	10" x 16"	10" x 16"	16" x 24	16" x 24"	17" x 25"	17" x 25"	18" x 30"	18" x 30"	20" x 34"	20" x 34"	20" x 22" (2 Filters)
Condenser Water Connections		3/4" FPT	3/4" FPT	3/4" FPT	3/4" FPT	3/4" FPT	3/4" FPT	3/4" FPT	3/4" FPT	3/4" FPT	1" FPT	1" FPT	1" FPT
A	Width	19"	19"	19"	21.5"	21.5"	21.5"	21.5"	21.5"	21.5"	24"	24"	24"
B	Depth	33"	33"	33"	44"	44"	44"	44"	47"	47"	54"	54"	62"
C	Height	11.5"	11.5"	11.5"	17"	17"	18"	18"	19"	19"	21"	21"	21"
D	Discharge Height	4"	4"	4"	9.75"	9.75"	9.75"	9.75"	11.25"	11.25"	11.25"	12.5"	12.5"
E	Discharge Width	6.5"	6.5"	6.5"	9.25"	9.25"	9.25"	9.25"	10.5"	10.5"	10.5"	11.75"	11.75"
H	Water Inlet	3.75"	3.75"	3.75"	3.25"	3.25"	3.25"	3.25"	3.25"	3.25"	3.25"	3.25"	3.25"
J	Water Outlet	9"	9"	9"	8.5"	8.5"	8.5"	8.5"	8.5"	8.5"	8"	8"	8.5"
M	R/A Duct Width	16"	16"	16"	23.25"	23.25"	24.25"	24.25"	29.25"	29.25"	33.25"	33.25"	43.5"
N	R/A Duct Flange Height	8.5"	8.5"	8.5"	14"	14"	15.25"	15.25"	16"	16"	18"	18"	18"
P	Filter Rack Height	11"	11"	11"	16"	16"	17"	17"	18.25	18.25"	20"	20"	20"
R	Cab Front to Filter Rack	16"	16"	16"	18.5"	18.5"	17.25"	17.25	14.5	14.5"	18"	18"	15"
T	Cabinet End to Filter Rack	1"	1"	1"	.10"	.10"	.100"	.100	1"	1"	1"	1"	1"
U	Side to Discharge (End) (Left-Hand Return)	7.75"	7.75"	7.75"	6"	6"	6"	6"	5.5"	5.5"	5"	5"	5.5"
	Side to Discharge (End) (Right-Hand Return)	4.75"	4.75"	4.75"	6"	6"	6"	6"	5.5"	5.5"	5"	5"	5.5"
V	Top to Discharge (FLE & FRS)	5.87"	5.87"	5.87"	5.75"	5.75"	6.75"	6.75"	6"	6"	8"	6.75"	6.75"
W	End to Discharge (Straight)	5.5"	5.5"	5.5"	6"	6"	6.5"	6.5"	5.5"	5.5"	5.25"	5"	5.5"
X	Top to Discharge (FRE & FLS)	1.75"	1.75"	1.75"	1.5"	1.5"	1.5"	1.5"	1.75"	1.75"	1.75"	1.75"	1.75"

Table 19 Horizontal (HZ) Units Dimensions

- Specifications subject to change without notice.
- All dimensions within ±0.125".
- Overall unit dimensions do not include filter rack or duct flanges.
- Unit sizes 015–070 can be field converted between end blow and straight-through supply air configurations.

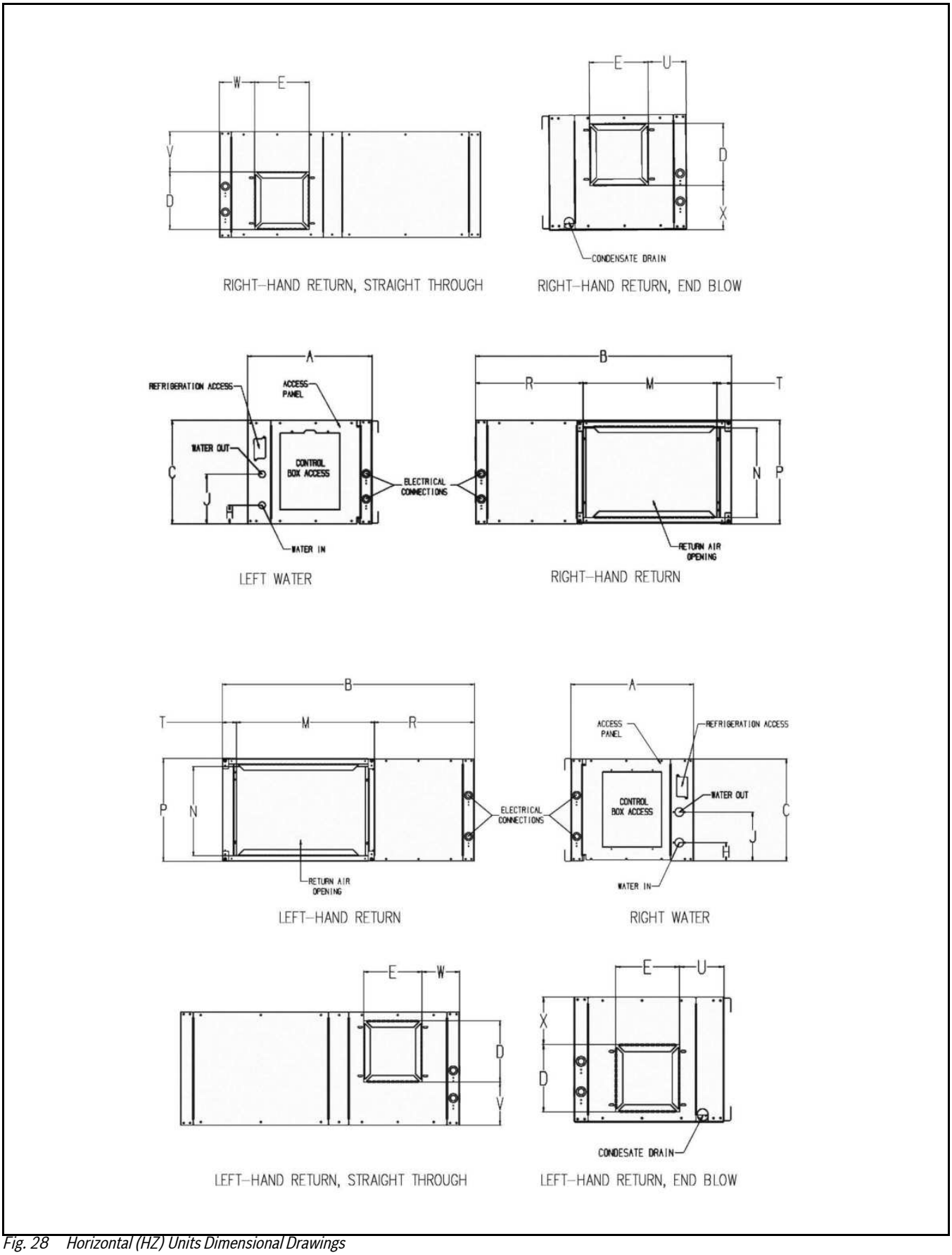

Fig. 28 Horizontal (HZ) Units Dimensional Drawings

21.3 Service Clearance

VT Cabinet Service Clearance

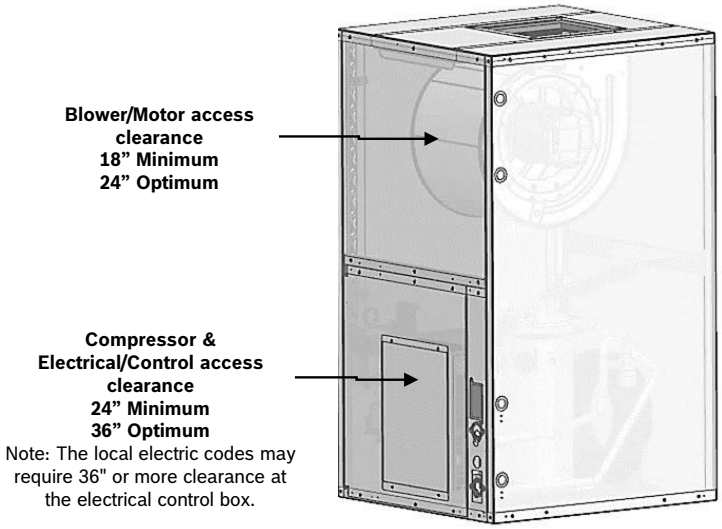

HZ Cabinet Service Clearance

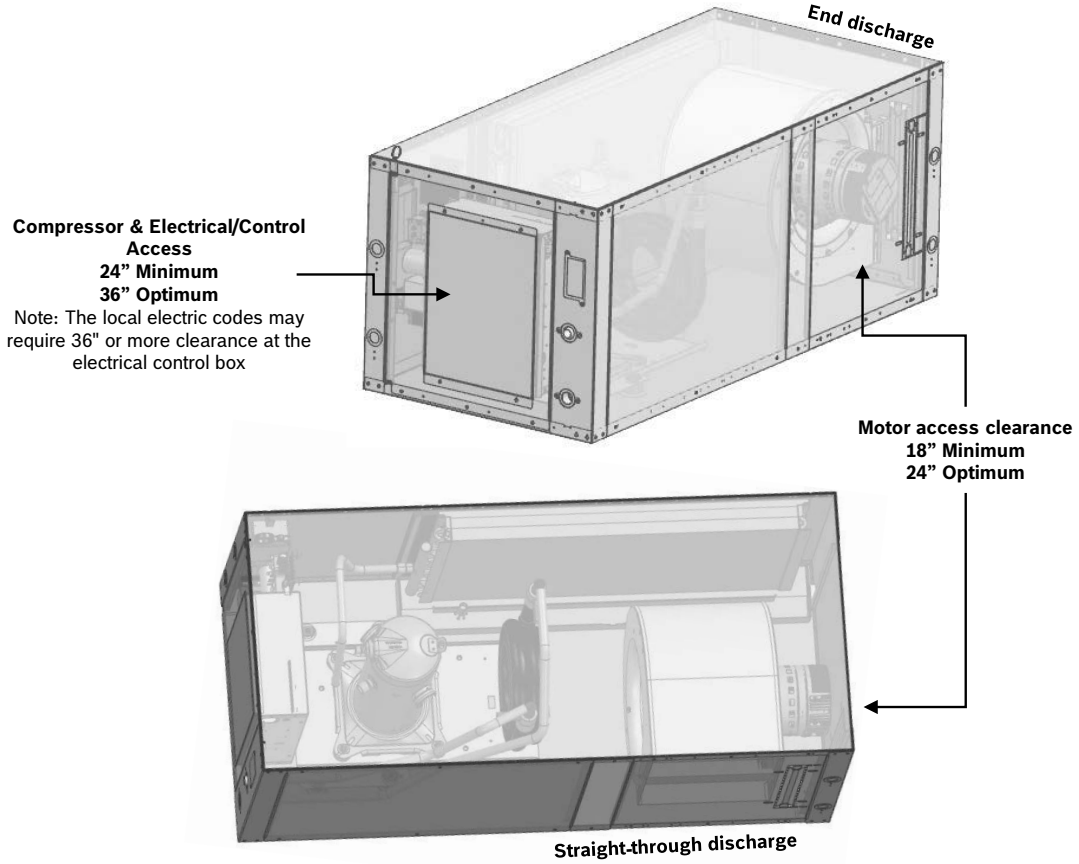

Fig. 29 Vertical and Horizontal Cabinet Service Clearance

22 Terminology

22.1 Acronyms

ASC — Anti-Short Cycle

AWG — American Wire Gauge

CFM — Cubic Feet per Minute

DDC — Digital Direct Controller

ECM — Electronically Commutated Motor

FLA — Full-Load Amps

GLHP — Ground Loop Heat Pump

HP — Horse Power

HPC — High-Pressure Switch Connection

HPS — High-Pressure Switch

IOM — Installation, Operation, and Maintenance Manual

LED — Light Emitting Diode

LPC — Low-Pressure Switch Connection

LPS — Low-Pressure Switch

LRA— Locked Rotor Amps

NO — Normally Open

NPA — Name Plate Amps

(R/A) — Return Air

RLA — Running Load Amps

22.2 Terms

Conditioned space — Space within a building provided with heated or cooled air or both (or surfaces) and, where required, with humidification or dehumidification means to maintain conditions for an acceptable thermal environment.

Decommissioning — Means the final shut-down and removal from operation or usage of a product or piece of equipment containing fluorinated greenhouse gases.

Discharge Pressure — Referring to the pressure leaving compressor.

Reclamation — Means the reprocessing of a recovered fluorinated greenhouse gas in order to match the equivalent performance of a virgin substance, taking into account its intended use.

Recovery — Referring to the collection and storage of fluorinated-greenhouse gases from products (including containers and equipment) during maintenance or servicing or prior to the disposal of the products or equipment.

Recycling — Referring to the reuse of a recovered fluorinated-greenhouse gas following a basic cleaning process.

Repair — Referring to the restoration of damaged or leaking products or equipment that contain, or whose functioning relies upon, fluorinated-greenhouse gases, involving a part containing or designed to contain such gases.

Suction Pressure — Referring to the pressure entering compressor.

23 Check-Out Sheet

Customer Data

Customer Name: _____ Date: _____
Address 1: _____
Address 2: _____
Phone: _____
Unit Number: _____

Unit Nameplate

Unit Make: _____
Model Number: _____ Serial Number: _____
Refrigerant Charge (oz.) _____
Compressor RLA: _____ Compressor LRA: _____
Blower Motor FLA (or NPA): _____ Blower Motor HP: _____
Maximum Fuse Size (Amps): _____ Maximum Circuit Capacity: _____

Operating Conditions	Cooling Mode	Heating Mode
Entering Air Temperature:		
Entering Air Measured at:		
Leaving Air Temperature:		
Leaving Air Measured at:		
Entering Fluid Temperature:		
Leaving Fluid Temperature:		
Fluid Flow (L/min):		
Compressor Volts:		
Compressor Amps:		
Blower Motor Volts:		
Blower Motor Amps:		
Source Fluid Type:		
Fluid Flow (gpm)*:		
Fluid-Side Pressure Drop*:		
Suction Pressure (psig)*:		
Discharge Pressure (psig)*:		
Suction Temperature*:		
Discharge Temperature*:		
Suction Superheat*:		
Entering TXV/Cap Tube Temperature*:		
Liquid Subcooling*:		

* Required for Troubleshooting ONLY

24 Notes

Notes

Notes

Notes

Bosch Thermotechnology Corp.
65 Grove Street
Watertown, MA 02472

Tel: +1 (800) 283-3787
Fax: +1 (603) 965-7568

8733842393 | Revised 05/2024

Bosch Thermotechnology Corp. reserves the right to make changes without notice due to continuing engineering and technological advances.

Additional Product Information Page

To see additional product information and documentation, please visit the product page: www.bosch-homecomfort.com/us/ or scan the QR code below.

SCAN ME

Spare Parts Manual

For assistance finding applicable spare parts, refer to the spare parts manual: https://www.bosch-homecomfort.com/us/en/residential/technical-documentation/spare-parts-diagrams/heating-and-cooling-heat-pump-systems/geothermal-water-sourced-heat-pump/ or scan the QR code below.

SCAN ME